AUTHENTICATED
U.S. GOVERNMENT
INFORMATION
GPO

FEDERAL REGISTER

Vol. 78 Wednesday,
No. 79 April 24, 2013

Pages 24033–24326

OFFICE OF THE FEDERAL REGISTER

The **FEDERAL REGISTER** (ISSN 0097–6326) is published daily, Monday through Friday, except official holidays, by the Office of the Federal Register, National Archives and Records Administration, Washington, DC 20408, under the Federal Register Act (44 U.S.C. Ch. 15) and the regulations of the Administrative Committee of the Federal Register (1 CFR Ch. I). The Superintendent of Documents, U.S. Government Printing Office, Washington, DC 20402 is the exclusive distributor of the official edition. Periodicals postage is paid at Washington, DC.

The **FEDERAL REGISTER** provides a uniform system for making available to the public regulations and legal notices issued by Federal agencies. These include Presidential proclamations and Executive Orders, Federal agency documents having general applicability and legal effect, documents required to be published by act of Congress, and other Federal agency documents of public interest.

Documents are on file for public inspection in the Office of the Federal Register the day before they are published, unless the issuing agency requests earlier filing. For a list of documents currently on file for public inspection, see *www.ofr.gov.*

The seal of the National Archives and Records Administration authenticates the Federal Register as the official serial publication established under the Federal Register Act. Under 44 U.S.C. 1507, the contents of the **Federal Register** shall be judicially noticed.

The **Federal Register** is published in paper and on 24x microfiche. It is also available online at no charge at *www.fdsys.gov*, a service of the U.S. Government Printing Office.

The online edition of the **Federal Register** is issued under the authority of the Administrative Committee of the Federal Register as the official legal equivalent of the paper and microfiche editions (44 U.S.C. 4101 and 1 CFR 5.10). It is updated by 6:00 a.m. each day the **Federal Register** is published and includes both text and graphics from Volume 59, 1 (January 2, 1994) forward. For more information, contact the GPO Customer Contact Center, U.S. Government Printing Office. Phone 202-512-1800 or 866-512-1800 (toll free). E-mail, *gpo@custhelp.com.*

The annual subscription price for the **Federal Register** paper edition is $749 plus postage, or $808, plus postage, for a combined **Federal Register, Federal Register** Index and List of CFR Sections Affected (LSA) subscription; the microfiche edition of the **Federal Register** including the **Federal Register** Index and LSA is $165, plus postage. Six month subscriptions are available for one-half the annual rate. The prevailing postal rates will be applied to orders according to the delivery method requested. The price of a single copy of the daily **Federal Register,** including postage, is based on the number of pages: $11 for an issue containing less than 200 pages; $22 for an issue containing 200 to 400 pages; and $33 for an issue containing more than 400 pages. Single issues of the microfiche edition may be purchased for $3 per copy, including postage. Remit check or money order, made payable to the Superintendent of Documents, or charge to your GPO Deposit Account, VISA, MasterCard, American Express, or Discover. Mail to: U.S. Government Printing Office—New Orders, P.O. Box 979050, St. Louis, MO 63197-9000; or call toll free 1-866-512-1800, DC area 202-512-1800; or go to the U.S. Government Online Bookstore site, see *bookstore.gpo.gov.*

There are no restrictions on the republication of material appearing in the **Federal Register.**

How To Cite This Publication: Use the volume number and the page number. Example: 77 FR 12345.

Postmaster: Send address changes to the Superintendent of Documents, Federal Register, U.S. Government Printing Office, Washington, DC 20402, along with the entire mailing label from the last issue received.

SUBSCRIPTIONS AND COPIES

PUBLIC

Subscriptions:

Paper or fiche	**202–512–1800**
Assistance with public subscriptions	**202–512–1806**

General online information **202–512–1530; 1–888–293–6498**

Single copies/back copies:

Paper or fiche	**202–512–1800**
Assistance with public single copies	**1–866–512–1800 (Toll-Free)**

FEDERAL AGENCIES

Subscriptions:

Paper or fiche	**202–741–6005**
Assistance with Federal agency subscriptions	**202–741–6005**

FEDERAL REGISTER WORKSHOP

THE FEDERAL REGISTER: WHAT IT IS AND HOW TO USE IT

FOR: Any person who uses the Federal Register and Code of Federal Regulations.

WHO: Sponsored by the Office of the Federal Register.

WHAT: Free public briefings (approximately 3 hours) to present:

1. The regulatory process, with a focus on the Federal Register system and the public's role in the development of regulations.
2. The relationship between the Federal Register and Code of Federal Regulations.
3. The important elements of typical Federal Register documents.
4. An introduction to the finding aids of the FR/CFR system.

WHY: To provide the public with access to information necessary to research Federal agency regulations which directly affect them. There will be no discussion of specific agency regulations.

WHEN: Tuesday, May 14, 2013
9 a.m.–12:30 p.m.

WHERE: Office of the Federal Register
Conference Room, Suite 700
800 North Capitol Street, NW.
Washington, DC 20002

RESERVATIONS: (202) 741–6008

Printed on recycled paper.

Contents

Federal Register

Vol. 78, No. 79

Wednesday, April 24, 2013

Agricultural Marketing Service
RULES
Pears Grown in Oregon and Washington:
Modification of Assessment Rate for Fresh Pears, 24033–24035
Processed Pear Committee; Membership Reapportionment:
Pears Grown in Oregon and Washington, 24036–24037
NOTICES
Agency Information Collection Activities; Proposals, Submissions, and Approvals:
Softwood Lumber Research, Promotion, Consumer Education and Industry Information Order, 24152–24153

Agriculture Department
See Agricultural Marketing Service
See Animal and Plant Health Inspection Service
See Rural Utilities Service
NOTICES
Agency Information Collection Activities; Proposals, Submissions, and Approvals, 24150–24152

Animal and Plant Health Inspection Service
NOTICES
Agency Information Collection Activities; Proposals, Submissions, and Approvals:
National Animal Health Monitoring System; Equine Herpesvirus Myeloencephalopathy Study, 24153–24154
National Animal Health Laboratory Network Reorganization Concept Paper, 24154–24155
Pest Risk Analysis for Interstate Movement:
Sapote Fruit from Puerto Rico into U.S., 24155–24156

Army Department
NOTICES
Meetings:
Advisory Committee on Arlington National Cemetery, 24185–24186

Centers for Disease Control and Prevention
NOTICES
Requests for Information:
Diethanolamine, 24207–24208

Children and Families Administration
NOTICES
Single-Source Program Expansion Supplement Grants; Awards:
12 Unaccompanied Alien Children's Shelter Care Grantees, 24208

Coast Guard
RULES
Safety Zones:
12th Annual Saltwater Classic; Port Canaveral Harbor; Port Canaveral, FL, 24069–24071
Fireworks Events in Captain of the Port New York Zone, 24068–24069
Pasquotank River; Elizabeth City, NC, 24071–24073
Special Regulations:
Hebda Cup Rowing Regatta, Trenton Channel; Detroit River, Wyandotte, MI, 24063–24065
Tuscaloosa Dragon Boat Races; Black Warrior River; Tuscaloosa, AL, 24065–24067

Commerce Department
See Foreign-Trade Zones Board
See Industry and Security Bureau
See National Oceanic and Atmospheric Administration
See Patent and Trademark Office

Defense Department
See Army Department
PROPOSED RULES
National Guard Bureau Privacy Program, 24124–24132
NOTICES
Meetings:
Board of Regents of Uniformed Services University of Health Sciences, 24185

Delaware River Basin Commission
NOTICES
Meetings:
Delaware River Basin Commission, 24186–24187

Department of Transportation
See Pipeline and Hazardous Materials Safety Administration

Employee Benefits Security Administration
NOTICES
Meetings:
Advisory Council on Employee Welfare and Pension Benefit Plans, 24235–24236

Employment and Training Administration
RULES
Wage Methodology for the Temporary Non-Agricultural Employment H–2B Program, Part 2, 24047–24061
NOTICES
Funding Availability:
Cooperative Agreements under the Disability Employment Initiative, 24236
Trade Adjustment Assistance Community College and Career Training Grants, 24236

Energy Department
See Federal Energy Regulatory Commission

Environmental Protection Agency
RULES
Pesticide Tolerances:
Azoxystrobin, 24094–24100
Reconsideration of Certain New Source Issues:
National Emission Standards for Hazardous Air Pollutants from Coal- and Oil-fired Electric Utility Steam Generating Units, etc., 24073–24094
PROPOSED RULES
National Oil and Hazardous Substances Pollution Contingency Plan; National Priorities List:
Deletion of Koppers Co., Inc. (Florence Plant) Superfund Site, 24134–24138

NOTICES
Agency Information Collection Activities; Proposals, Submissions, and Approvals:
NESHAP for Site Remediation, 24193–24194
Solid Waste Disposal Facility Criteria, 24194–24195
Product Cancellation Order for Certain Pesticide Registrations, 24195–24199

Executive Office of the President
See Presidential Documents
See Science and Technology Policy Office

Federal Aviation Administration
RULES
Airworthiness Directives:
Eurocopter France Helicopters, 24041–24047
The Boeing Company Airplanes, 24037–24040
NOTICES
Aviation Rulemaking Advisory Committee Airman Testing Standards and Training Working Group, 24289–24290
Furlough Implementation, 24290
Petitions for Exemption; Summary, 24290–24292

Federal Communications Commission
PROPOSED RULES
Implementing Public Safety Broadband Provisions of Middle Class Tax Relief and Job Creation Act of 2012, 24138–24147
Petition for Reconsideration of Action in a Rulemaking Proceeding, 24147

Federal Emergency Management Agency
NOTICES
Agency Information Collection Activities; Proposals, Submissions, and Approvals:
Application for Surplus Federal Real Property Public Benefit Conveyance and BRAC Program for Emergency Management Use; Correction, 24226
Community Drill Day Registration; Correction, 24226
Correction, 24226

Federal Energy Regulatory Commission
PROPOSED RULES
Generator Requirements at the Transmission Interface, 24101–24107
Version 5 Critical Infrastructure Protection Reliability Standards, 24107–24124
NOTICES
Agency Information Collection Activities; Proposals, Submissions, and Approvals, 24187–24189
Applications:
Transcontinental Gas Pipe Line Co., LLC, 24189–24191
Combined Filings, 24191–24192
Complaints:
J.P. Morgan Ventures Energy Corp. v. Midwest Independent System Operator, Inc., et al., 24192
Requests under Blanket Authorization:
Texas Eastern Transmission, LP, 24192–24193
Staff Attendances, 24193

Federal Highway Administration
NOTICES
Final Federal Agency Actions on Proposed Highway in California, 24292–24293

Federal Maritime Commission
NOTICES
Complaints:
Streak Products, Inc. v. UTi, United States, Inc., 24199
Ocean Transportation Intermediary License Applicants, 24200
Ocean Transportation Intermediary License Reissuances, 24200
Ocean Transportation Intermediary License Rescission of Revocation, 24200

Federal Motor Carrier Safety Administration
NOTICES
Pilot Program on NAFTA Trucking Provisions, 24293–24296
Qualification of Drivers; Exemption Applications:
Diabetes Mellitus, 24303–24304
Epilepsy and Seizure Disorders, 24301–24302
Vision, 24296–24301

Federal Reserve System
NOTICES
Formations of, Acquisitions by, and Mergers of Bank Holding Companies, 24200–24201
Proposals to Engage in or to Acquire Companies Engaged in Permissible Nonbanking Activities, 24201

Federal Trade Commission
NOTICES
Proposed Consent Agreements:
Graco, Inc.; Analysis of Agreement Containing Consent Order to Aid Public Comment, 24201–24206

Fish and Wildlife Service
NOTICES
Comprehensive Conservation Plans:
Lake Andes National Wildlife Refuge Complex, Lake Andes, SD, 24228–24229

Food and Drug Administration
NOTICES
Agency Information Collection Activities; Proposals, Submissions, and Approvals:
Protection of Human Subjects, Informed Consent; Institutional Review Boards, 24208–24211
Draft Guidances for Industry; Availability:
Safety Considerations for Container Labels and Carton Labeling Design to Minimize Medication Errors, 24211

Foreign-Trade Zones Board
NOTICES
Applications for Reorganization under Alternative Site Framework:
Foreign-Trade Zone 20, Suffolk, VA, 24157–24158
Production Activities:
Foreign-Trade Zone 75, Phoenix, AZ; Orbital Sciences Corp. (Satellites and Spacecraft Launch Vehicles), Gilbert, AZ, 24158

General Services Administration
NOTICES
Agency Information Collection Activities; Proposals, Submissions, and Approvals:
USA Spending, 24206

Health and Human Services Department
See Centers for Disease Control and Prevention
See Children and Families Administration
See Food and Drug Administration
See Indian Health Service
See National Institutes of Health

Homeland Security Department
See Coast Guard
See Federal Emergency Management Agency
RULES
Wage Methodology for the Temporary Non-Agricultural Employment H–2B Program, Part 2, 24047–24061
NOTICES
Exercise of Authority under the Immigration and Nationality Act, 24225–24226

Housing and Urban Development Department
NOTICES
Agency Information Collection Activities; Proposals, Submissions, and Approvals:
FHA Technology Open to Approved Lenders Mortgage Scorecard, 24226–24227
Real Estate Settlement Procedures Act Disclosures, 24227–24228

Indian Affairs Bureau
NOTICES
Agency Information Collection Activities; Proposals, Submissions, and Approvals:
Grazing Permits, 24229–24230

Indian Health Service
See Indian Health Service
NOTICES
Funding Opportunities:
Tribal Management Grant Program, 24212–24220

Industry and Security Bureau
NOTICES
Agency Information Collection Activities; Proposals, Submissions, and Approvals:
Application for NATO International Competitive Bidding, 24158–24159
International Import Certificate, 24159
Meetings:
Information Systems Technical Advisory Committee, 24160
Materials Processing Equipment Technical Advisory Committee, 24160–24161
Materials Technical Advisory Committee, 24161
Transportation and Related Equipment Technical Advisory Committee, 24159–24160

Interior Department
See Fish and Wildlife Service
See Indian Affairs Bureau
See Land Management Bureau
See National Indian Gaming Commission
See National Park Service

Internal Revenue Service
NOTICES
Agency Information Collection Activities; Proposals, Submissions, and Approvals, 24311–24313
Agency Information Collection Activities; Proposals, Submissions, and Approvals:
Tip Reporting Alternative Commitment Agreement for Use in Industries, 24313

International Trade Commission
NOTICES
Investigations; Terminations, Modifications, Rulings, etc.:
Certain Dimmable Compact Fluorescent Lamps and Products Containing Same, 24233
Requests for Statements on Public Interest:
Certain Semiconductor Chips with Dram Circuitry, and Modules and Products Containing Same, 24234

Labor Department
See Employee Benefits Security Administration
See Employment and Training Administration
See Labor Statistics Bureau
See Occupational Safety and Health Administration
NOTICES
Agency Information Collection Activities; Proposals, Submissions, and Approvals:
Personal Protective Equipment Standard for General Industry, 24234–24235

Labor Statistics Bureau
NOTICES
Meetings:
Data Users Advisory Committee, 24236–24237

Land Management Bureau
NOTICES
Realty Actions:
Proposed Direct Sale of Public Land in Josephine County, OR, 24231
Recreation and Public Purposes Act Classification of Public Lands in Sweetwater County, WY, 24230–24231

National Highway Traffic Safety Administration
NOTICES
Petitions for Exemption from Vehicle Theft Prevention Standard:
Maserati North America Inc., 24304–24305

National Indian Gaming Commission
RULES
Minimum Technical Standards for Class II Gaming Systems and Equipment, 24061–24063

National Institutes of Health
NOTICES
Agency Information Collection Activities; Proposals, Submissions, and Approvals:
Women's Health Initiative Observational Study, 24220–24221
Meetings:
Center for Scientific Review, 24222–24224
National Cancer Institute, 24224–24225
National Center for Advancing Translational Sciences, 24223
National Human Genome Research Institute, 24223
National Institute of Allergy and Infectious Diseases; Cancellation, 24224
National Institute of Biomedical Imaging and Bioengineering, 24223
National Institute of Neurological Disorders and Stroke, 24221–24222
National Institute on Aging, 24224
National Library of Medicine, 24221

National Oceanic and Atmospheric Administration
PROPOSED RULES
Atlantic Highly Migratory Species:
Atlantic Shark Management Measures, 24148–24149

NOTICES
Takes of Marine Mammals Incidental to Specified Activities:
Navy Training Conducted at Silver Strand Training Complex, San Diego Bay, CA, 24161–24184

National Park Service
NOTICES
Environmental Impact Statements; Availability, etc.:
Denali Park Road Final Vehicle Management Plan; Denali National Park and Preserve; Records of Decision, 24232
National Register of Historic Places:
Pending Nominations and Related Actions, 24232–24233

National Science Foundation
NOTICES
Antarctic Conservation Act Permit Applications, 24238–24239
Meetings:
Advisory Committee for Cyberinfrastructure, 24239
Advisory Committee for Engineering, 24239

Occupational Safety and Health Administration
NOTICES
Meetings:
Advisory Committee on Construction Safety and Health, 24237–24238

Patent and Trademark Office
NOTICES
Agency Information Collection Activities; Proposals, Submissions, and Approvals, 24184

Pipeline and Hazardous Materials Safety Administration
NOTICES
Actions on Special Permit Applications, 24305–24307
Applications for Modification of Special Permits, 24307–24308
Applications for Special Permits, 24308–24309
List of Applications Delayed More than 180 Days, 24309

Postal Regulatory Commission
NOTICES
Temporary Mailing Promotions, 24239–24240

Postal Service
PROPOSED RULES
New Mailing Standards for Live Animals and Special Handling, 24132–24134

Presidential Documents
PROCLAMATIONS
Special Observances:
Earth Day (Proc. 8962), 24325–24326
National Crime Victims' Rights Week (Proc. 8959), 24319–24320
National Park Week (Proc. 8961), 24323–24324
National Volunteer Week (Proc. 8960), 24321–24322
ADMINISTRATIVE ORDERS
Syria; Syrian Opposition Coalition and Supreme Military Council, Drawdown Authorization for Support (Presidential Determination):
No. 2013–08 of April 11, 2013, 24315–24318

Rural Utilities Service
NOTICES
Agency Information Collection Activities; Proposals, Submissions, and Approvals, 24156–24157

Science and Technology Policy Office
NOTICES
Meetings:
Technology, National Science and Technology Council; Nanoscale Science, Engineering, and Technology Subcommittee, 24241

Securities and Exchange Commission
NOTICES
Applications:
John Hancock Exchange-Traded Fund Trust, et al., 24241–24249
Lincoln National Life Insurance Co., et al., 24249–24257
Self-Regulatory Organizations; Proposed Rule Changes:
C2 Options Exchange, Inc., 24285–24287
Financial Industry Regulatory Authority, Inc., 24261–24263
International Securities Exchange, LLC, 24265–24276
NASDAQ OMX PHLX LLC, 24263–24265, 24280–24281
NASDAQ Stock Market LLC, 24281–24285
NYSE Arca, Inc., 24258–24261, 24276–24280
Options Clearing Corp., 24257–24258

State Department
NOTICES
Calls for Expert Reviewers:
2013 Revised Supplementary Methods and Good Practice Guidance Arising from Kyoto Protocol, 24287–24288
Culturally Significant Objects Imported for Exhibition:
Frida Kahlo, Diego Rivera, and Masterpieces of Modern Mexico; Jacques and Natasha Gelman Collection; Determinations, 24288

Surface Transportation Board
NOTICES
Construction Exemptions:
California High-Speed Rail Authority, Merced, Madera and Fresno Counties, CA, 24309–24310

Transportation Department
See Federal Aviation Administration
See Federal Highway Administration
See Federal Motor Carrier Safety Administration
See National Highway Traffic Safety Administration
See Pipeline and Hazardous Materials Safety Administration
See Surface Transportation Board
NOTICES
Applications for Certificates of Public Convenience and Necessity and Foreign Air Carrier Permits, 24288
Applications:
National Air Cargo Group, Inc., d/b/a National Airlines; Foreign Scheduled Authority, 24288–24289

Treasury Department
See Internal Revenue Service
NOTICES
Study and Report to Congress on Natural Catastrophes and Insurance, 24310–24311

Separate Parts In This Issue

Part II
Presidential Documents, 24315–24326

Reader Aids

Consult the Reader Aids section at the end of this page for phone numbers, online resources, finding aids, reminders, and notice of recently enacted public laws.

To subscribe to the Federal Register Table of Contents LISTSERV electronic mailing list, go to http://listserv.access.gpo.gov and select Online mailing list archives, FEDREGTOC-L, Join or leave the list (or change settings); then follow the instructions.

CFR PARTS AFFECTED IN THIS ISSUE

A cumulative list of the parts affected this month can be found in the Reader Aids section at the end of this issue.

3 CFR

Proclamations:

8959 24319
8960 24321
8961 24323
8962 24325

Administrative Orders:

Presidential Determinations:
No. 2013–8 of April 19, 2013 24317

7 CFR

927 (2 documents) 24033, 24036

8 CFR

214 24047

14 CFR

39 (2 documents) 24037, 24041

18 CFR

Proposed Rules:

40 (2 documents) 24101, 24107

20 CFR

655 24047

25 CFR

547 24061

32 CFR

Proposed Rules:

329 24124

33 CFR

100 (2 documents) 24063, 24065
165 (3 documents) 24068, 24069, 24071

39 CFR

Proposed Rules:

111 24132

40 CFR

60 24073
63 24073
180 24094

Proposed Rules:

300 24134

47 CFR

Proposed Rules:

1 24138
2 24138
27 24138
54 24147
90 24138

50 CFR

Proposed Rules:

635 24148

Rules and Regulations

Federal Register
Vol. 78, No. 79
Wednesday, April 24, 2013

This section of the FEDERAL REGISTER contains regulatory documents having general applicability and legal effect, most of which are keyed to and codified in the Code of Federal Regulations, which is published under 50 titles pursuant to 44 U.S.C. 1510.

The Code of Federal Regulations is sold by the Superintendent of Documents. Prices of new books are listed in the first FEDERAL REGISTER issue of each week.

DEPARTMENT OF AGRICULTURE

Agricultural Marketing Service

7 CFR Part 927

[Doc. No. AMS–FV–12–0030; FV12–927–1 FR]

Pears Grown in Oregon and Washington; Modification of the Assessment Rate for Fresh Pears

AGENCY: Agricultural Marketing Service, USDA.

ACTION: Final rule.

SUMMARY: This rule increases the assessment rate established for the Fresh Pear Committee (Committee) for the 2012–2013 and subsequent fiscal periods from $0.366 to $0.449 per standard box or equivalent of summer/fall pears handled, and decreases the assessment rate from $0.471 to $0.449 per standard box or equivalent of fresh winter pears handled. The Committee locally administers the marketing order that regulates the handling of fresh pears grown in Oregon and Washington. Assessments upon Oregon-Washington fresh pear handlers are used by the Committee to fund reasonable and necessary expenses of the program. The fiscal period begins July 1 and ends June 30. The assessment rate will remain in effect indefinitely unless modified, suspended, or terminated.

DATES: *Effective Date:* April 25, 2013.

FOR FURTHER INFORMATION CONTACT: Teresa Hutchinson or Gary Olson, Northwest Marketing Field Office, Marketing Order and Agreement Division, Fruit and Vegetable Program, AMS, USDA; Telephone: (503) 326–2724, Fax: (503) 326–7440, or Email: *Teresa.Hutchinson@ams.usda.gov* or *GaryD.Olson@ams.usda.gov*.

Small businesses may request information on complying with this regulation by contacting Jeffrey Smutny, Marketing Order and Agreement Division, Fruit and Vegetable Program, AMS, USDA, 1400 Independence Avenue SW., STOP 0237, Washington, DC 20250–0237; Telephone: (202) 720–2491, Fax: (202) 720–8938, or Email: *Jeffrey.Smutny@ams.usda.gov*.

SUPPLEMENTARY INFORMATION: This rule is issued under Marketing Order No. 927, as amended (7 CFR part 927), regulating the handling of pears grown in Oregon and Washington, hereinafter referred to as the ''order. ''The order is effective under the Agricultural Marketing Agreement Act of 1937, as amended (7 U.S.C. 601–674), hereinafter referred to as the ''Act.''

The Department of Agriculture (USDA) is issuing this rule in conformance with Executive Order 12866.

This rule has been reviewed under Executive Order 12988, Civil Justice Reform. Under the marketing order now in effect, Oregon-Washington pear handlers are subject to assessments. Funds to administer the order are derived from such assessments. It is intended that the assessment rate as issued herein will be applicable to all assessable fresh pears beginning July 1, 2012, and continue until amended, suspended, or terminated.

The Act provides that administrative proceedings must be exhausted before parties may file suit in court. Under section 608c(15)(A) of the Act, any handler subject to an order may file with USDA a petition stating that the order, any provision of the order, or any obligation imposed in connection with the order is not in accordance with law and request a modification of the order or to be exempted therefrom. Such handler is afforded the opportunity for a hearing on the petition. After the hearing, USDA would rule on the petition. The Act provides that the district court of the United States in any district in which the handler is an inhabitant, or has his or her principal place of business, has jurisdiction to review USDA's ruling on the petition, provided an action is filed not later than 20 days after the date of the entry of the ruling.

This rule increases the assessment rate established for the Committee for the 2012–2013 and subsequent fiscal periods from $0.366 to $0.449 per standard box or equivalent of summer/fall pears handled, and decreases the assessment rate from $0.471 to $0.449 per standard box or equivalent of fresh winter pears handled. The standard box or equivalent assessment rate for ''other'' fresh pears would remain unchanged at $0.00.

The Oregon-Washington pear marketing order provides authority for the Committee, with USDA's approval, to formulate an annual budget of expenses and to collect assessments from handlers to administer the fresh pear program. The members of the Committee are producers and handlers of Oregon-Washington fresh pears. They are familiar with the Committee's needs and with the costs for goods and services in their local area and are thus in a position to formulate an appropriate budget and assessment rate. The assessment rate is formulated and discussed at a public meeting. Thus, all directly affected persons have an opportunity to participate and provide input.

For the 2011–2012 and subsequent fiscal periods, the Committee recommended, and USDA approved, the following three base rates of assessment: (a) $0.366 per standard box or equivalent for any or all varieties or subvarieties of fresh pears classified as ''summer/fall''; (b) $0.471 per standard box or equivalent for any or all varieties or subvarieties of fresh pears classified as ''winter''; and (c) $0.000 per standard box or equivalent for any or all varieties or subvarieties of fresh pears classified as ''other''. These base rates of assessment would continue in effect from fiscal period to fiscal period unless modified, suspended, or terminated by USDA upon recommendation and information submitted by the Committee or other information available to USDA.

The Committee met on May 31, 2012, and unanimously recommended 2012–2013 expenditures of $9,166,744. To fund the 2012–2013 expenditures, the Committee also recommended an assessment rate of $0.449 per standard box or equivalent for both fresh summer/fall and winter pears.

In comparison, last year's budgeted expenditures were $9,301,960. The fresh summer/fall pear assessment rate of $0.449 is $0.083 higher than the rate currently in effect. The fresh winter pear assessment rate of $0.449 is $0.022 lower than the rate currently in effect. The Committee recommended increasing the promotion and paid

advertising expenditures to market the larger 2012–2013 fresh summer/fall pear crop, estimated at four percent higher than 2011–2012 and the five-year average. Accordingly, the Committee recommended the higher fresh summer/fall pear assessment rate to fund the increased 2012–2013 promotion and paid advertising expenditures. The Committee estimates that the 2012–2013 fresh winter pear crop will be nine percent lower than 2011–2012. Consequently, the Committee recommended lower promotion and paid advertising expenditures for marketing the reduced fresh winter pear crop, resulting in a lower assessment rate for 2012–2013.

The major expenditures recommended by the Committee for the 2012–2013 fiscal period include $450,274 for contracted administration by Pear Bureau Northwest, $635,500 for production research and market development, $6,160,000 for promotion and paid advertising for winter pears, and $1,732,500 for promotion and paid advertising for summer/fall pears. In comparison, major expenses for the 2011–2012 fiscal period included $437,160 for contracted administration by Pear Bureau Northwest, $644,800 for production research and market development, $6,765,000 for promotion and paid advertising for winter pears, and $1,290,000 for promotion and paid advertising for summer/fall pears.

The Committee based its recommended assessment rate for fresh pears on the 2012–2013 summer/fall and winter pear crop estimates, the 2012–2013 program expenditure needs, and the current and projected size of its monetary reserve. Applying the $0.449 per standard box or equivalent assessment rate to the Committee's 4,500,000 standard box or equivalent fresh summer/fall pear crop estimate should provide $2,020,500 in assessment income. The quantity of assessable fresh winter pears for the 2012–2013 fiscal period is estimated at 16,000,000 standard boxes or equivalent and should provide $7,184,000 in assessment income. Thus, income derived from winter and summer/fall fresh pear handler assessments ($9,204,500) and interest and miscellaneous income ($20,000) will be adequate to cover the recommended $9,166,774 budget for 2012–2013. The Committee estimates that it will have a monetary reserve of $1,031,259 on June 30, 2012. During 2012–2013, the Committee estimates that $57,726 will be added to the reserve for an estimated reserve of $1,088,985 on June 30, 2013, which will be within the maximum permitted by the order of approximately one fiscal period's operational expenses (§ 927.42).

The assessment rate established in this rule will continue in effect indefinitely unless modified, suspended, or terminated by USDA upon recommendation and information submitted by the Committee or other available information.

Although this assessment rate will be in effect for an indefinite period, the Committee will continue to meet prior to or during each fiscal period to recommend a budget of expenses and consider recommendations for modification of the assessment rate. The dates and times of Committee meetings are available from the Committee or USDA. Committee meetings are open to the public and interested persons may express their views at these meetings. USDA will evaluate Committee recommendations and other available information to determine whether modification of the assessment rate is needed. Further rulemaking will be undertaken as necessary. The Committee's 2012–2013 budget and those for subsequent fiscal periods will be reviewed and, as appropriate, approved by USDA.

Final Regulatory Flexibility Analysis

Pursuant to requirements set forth in the Regulatory Flexibility Act (RFA) (5 U.S.C. 601–612), the Agricultural Marketing Service (AMS) has considered the economic impact of this rule on small entities. Accordingly, AMS has prepared this final regulatory flexibility analysis.

The purpose of the RFA is to fit regulatory actions to the scale of business subject to such actions in order that small businesses will not be unduly or disproportionately burdened. Marketing orders issued pursuant to the Act, and the rules issued thereunder, are unique in that they are brought about through group action of essentially small entities acting on their own behalf.

There are approximately 1,580 producers of fresh pears in the regulated production area and approximately 38 handlers of fresh pears subject to regulation under the order. Small agricultural producers are defined by the Small Business Administration (SBA) (13 CFR 121.201) as those having annual receipts of less than $750,000, and small agricultural service firms are defined as those whose annual receipts are less than $7,000,000.

According to the Noncitrus Fruits and Nuts 2011 Preliminary Summary issued in March 2012 by the National Agricultural Statistics Service, the total 2011 farm-gate value of all pears grown in Oregon and Washington is estimated at approximately $275,531,000. Based on the number of pear producers in Oregon and Washington, the average gross revenue for each producer can be estimated at approximately $174,387. Furthermore, based on Committee records, the Committee has estimated that 56 percent of Oregon-Washington pear handlers currently ship less than $7,000,000 worth of fresh pears on an annual basis. From this information, it is concluded that the majority of producers and handlers of Oregon and Washington fresh pears may be classified as small entities.

This rule increases the assessment rate established for the Committee and collected from handlers for the 2012–2013 and subsequent fiscal periods from $0.366 to $0.449 per standard box or equivalent of fresh summer/fall pears handled, and decreases the assessment rate from $0.471 to $0.449 per standard box or equivalent of fresh winter pears handled. The Committee unanimously recommended 2012–2013 expenditures of $9,166,774, and an assessment rate of $0.449 per standard box or equivalent of fresh summer/fall and winter pears handled. The assessment rate of $0.449 is $0.083 higher than the 2011–2012 assessment rate for summer/fall pears, and $0.022 lower than the 2011–2012 assessment rate for winter pears. The Committee recommended increasing the promotion and paid advertising expenditures to market the larger 2012–2013 fresh summer/fall pear crop, estimated at four percent higher than 2011–2012 and the five-year average. Accordingly, the Committee recommended the higher fresh summer/fall pear assessment rate to fund the increased 2012–2013 promotion and paid advertising expenditures. The Committee estimates that the 2012–2013 fresh winter pear crop will be nine percent lower than 2011–2012. Consequently, the Committee recommended lower promotion and paid advertising expenditures for marketing the reduced fresh winter pear crop, resulting in a lower assessment rate for 2012–2013.

The quantity of assessable fresh summer/fall pears for the 2012–2013 fiscal period is estimated at 4,500,000 standard boxes or equivalent. Thus, the $0.449 rate should provide $2,020,500 in assessment income. Applying the $0.449 per standard box or equivalent assessment rate to the Committee's 16,000,000 standard boxes or equivalent, the fresh winter pear crop estimate should provide $7,184,000 in assessment income. Income derived from winter and summer/fall fresh pear handler assessments ($9,204,500) along

with interest and miscellaneous income ($20,000) will be adequate to cover the budgeted expenses.

The major expenditures recommended by the Committee for the 2012–2013 fiscal period include $450,274 for contracted administration by Pear Bureau Northwest, $635,500 for production research and market development, $6,160,000 for promotion and paid advertising for winter pears, and $1,732,500 for promotion and paid advertising for summer/fall pears. Budgeted expenses for these items in 2011–2012 were $437,160, $644,800, $6,765,000, and $1,290,000, respectively.

The Committee discussed alternatives to this rule. Leaving the assessment rate at the 2011–2012 level for summer/fall and winter pears was initially considered, but not recommended. Although considered, the Committee believes that the 2011–2012 assessment level for fresh summer/fall pears would not generate the funds necessary for the promotion and marketing of the larger fresh summer/fall pear crop. As a consequence, increasing it to the level recommended herein was determined as the best alternative. Similarly, the Committee discussed alternatives for the winter pear assessment rate, but concluded that the recommended lower assessment rate should generate enough funds for promotion and marketing of the smaller fresh winter pear crop.

A review of historical information and preliminary information pertaining to the upcoming fiscal period indicates that the Oregon-Washington producer price for the 2012–2013 fiscal period could average $9 per standard box or equivalent of pears. Therefore, the estimated assessment revenue for the 2012–2013 fiscal period as a percentage of total producer revenue is 4.99 percent.

This action modifies the assessment obligation imposed on handlers. While the increase in the summer/fall pear assessment rate may impose some additional costs on handlers, the costs are minimal and uniform on all handlers. Some of the additional costs may be passed on to producers. However, these costs are offset by the benefits derived by the operation of the marketing order. On the other hand, decreasing the winter pear assessment rate reduces the burden on handlers, and may reduce the burden on producers.

In addition, the Committee's meeting was widely publicized throughout the Oregon-Washington pear industry and all interested persons were invited to attend the meeting and participate in Committee deliberations on all issues. Like all Committee meetings, the May 31, 2012, meeting was a public meeting and all entities, both large and small, were able to express views on this issue.

In accordance with the Paperwork Reduction Act of 1995 (44 U.S.C. Chapter 35), the order's information collection requirements have been previously approved by the Office of Management and Budget (OMB) and assigned OMB No. 0581–0189, Generic Fruit Crops. No changes in those requirements as a result of this action are anticipated. Should any changes become necessary, they would be submitted to OMB for approval.

This rule imposes no additional reporting or recordkeeping requirements on either small or large Oregon-Washington fresh pear handlers. As with all Federal marketing order programs, reports and forms are periodically reviewed to reduce information requirements and duplication by industry and public sector agencies. As noted in the initial regulatory flexibility analysis, USDA has not identified any relevant Federal rules that duplicate, overlap, or conflict with this final rule.

AMS is committed to complying with the E-Government Act, to promote the use of the Internet and other information technologies to provide increased opportunities for citizen access to Government information and services, and for other purposes.

A proposed rule concerning this action was published in the **Federal Register** on January 2, 2013 (78 FR 34). The Committee made copies of the proposed rule available to all pear handlers. Finally, the proposal was made available through the Internet by USDA and the Office of the Federal Register. A 10-day comment period ending January 14, 2013, was provided for interested persons to respond to the proposal. No comments were received.

A small business guide on complying with fruit, vegetable, and specialty crop marketing agreements and orders may be viewed at: *www.ams.usda.gov/MarketingOrdersSmallBusinessGuide.* Any questions about the compliance guide should be sent to Jeffrey Smutny at the previously mentioned address in the **FOR FURTHER INFORMATION CONTACT** section.

After consideration of all relevant material presented, including the information and recommendation submitted by the Committee and other available information, it is hereby found that this rule, as hereinafter set forth, will tend to effectuate the declared policy of the Act.

Pursuant to 5 U.S.C. 553, it is also found and determined that good cause exists for not postponing the effective date of this rule until 30 days after publication in the **Federal Register** because: (1) The 2012–2013 fiscal period began on July 1, 2012, and the marketing order requires that the rate of assessment for each fiscal period apply to all assessable pears handled during such fiscal period; (2) the Committee needs to have sufficient funds to pay its expenses, which are incurred on a continuous basis; (3) the rule decreases the assessment rate for assessable fresh winter pears; and (4) handlers are aware of this action, which was unanimously recommended by the Committee at a public meeting and is similar to other assessment rate actions issued in past years. Also, a 10-day comment period was provided for in the proposed rule, and no comments were received.

List of Subjects in 7 CFR Part 927

Marketing agreements, Pears, Reporting and recordkeeping requirements.

For the reasons set forth in the preamble, 7 CFR part 927 is amended as follows:

PART 927—PEARS GROWN IN OREGON AND WASHINGTON

■ 1. The authority citation for 7 CFR part 927 continues to read as follows:

Authority: 7 U.S.C. 601–674.

■ 2. In § 927.236, the introductory text and paragraphs (a) and (b) are revised to read as follows:

§ 927.236 Fresh pear assessment rate.

On and after July 1, 2012, the following base rates of assessment for fresh pears are established for the Fresh Pear Committee:

(a) $0.449 per 44-pound net weight standard box or container equivalent for any or all varieties or subvarieties of fresh pears classified as ''summer/fall'';

(b) $0.449 per 44-pound net weight standard box or container equivalent for any or all varieties or subvarieties of fresh pears classified as ''winter''; and

* * * * *

Dated: April 18, 2013.

David R. Shipman,

Administrator, Agricultural Marketing Service.

[FR Doc. 2013–09679 Filed 4–23–13; 8:45 am]

BILLING CODE 3410–02–P

DEPARTMENT OF AGRICULTURE

Agricultural Marketing Service

7 CFR Part 927

[Doc. No. AMS–FV–12–0032; FV12–927–3 FR]

Pears Grown in Oregon and Washington; Committee Membership Reapportionment for Processed Pears

AGENCY: Agricultural Marketing Service, USDA.

ACTION: Final rule.

SUMMARY: This rule reapportions the membership of the Processed Pear Committee (Committee) established under the Oregon-Washington pear marketing order. The marketing order regulates the handling of processed pears grown in Oregon and Washington, and is administered locally by the Committee. This rule reapportions the processor membership such that the three processor members and alternate members will be selected from the production area at-large rather than from a specific district. In an industry with few processors, this change will provide the flexibility needed to help ensure that all processor member positions are filled, resulting in effective representation of the processed pear industry on the Committee.

DATES: Effective July 1, 2013.

FOR FURTHER INFORMATION CONTACT: Teresa Hutchinson or Gary Olson, Northwest Marketing Field Office, Marketing Order and Agreement Division, Fruit and Vegetable Program, AMS, USDA; Telephone: (503) 326–2724, Fax: (503) 326–7440, or E-Mail: *Teresa.Hutchinson@ams.usda.gov* or *GaryD.Olson@ams.usda.gov*.

Small businesses may request information on complying with this regulation by contacting Jeffrey Smutny, Marketing Order and Agreement Division, Fruit and Vegetable Program, AMS, USDA, 1400 Independence Avenue SW., STOP 0237, Washington, DC 20250–0237; Telephone: (202) 720–2491, Fax: (202) 720–8938, or Email: *Jeffrey.Smutny@ams.usda.gov*.

SUPPLEMENTARY INFORMATION: This final rule is issued under Marketing Order No. 927, as amended (7 CFR part 927), regulating the handling of pears grown in Oregon and Washington, hereinafter referred to as the ''order.'' The order is effective under the Agricultural Marketing Agreement Act of 1937, as amended (7 U.S.C. 601–674), hereinafter referred to as the ''Act.''

The Department of Agriculture (USDA) is issuing this rule in conformance with Executive Order 12866.

This final rule has been reviewed under Executive Order 12988, Civil Justice Reform. This rule is not intended to have retroactive effect.

The Act provides that administrative proceedings must be exhausted before parties may file suit in court. Under section 608c(15)(A) of the Act, any handler subject to an order may file with USDA a petition stating that the order, any provision of the order, or any obligation imposed in connection with the order is not in accordance with law and request a modification of the order or to be exempted therefrom. A handler is afforded the opportunity for a hearing on the petition. After the hearing, USDA would rule on the petition. The Act provides that the district court of the United States in any district in which the handler is an inhabitant, or has his or her principal place of business, has jurisdiction to review USDA's ruling on the petition, provided an action is filed not later than 20 days after the date of the entry of the ruling.

This final rule reapportions the membership of the Committee established under the Oregon-Washington pear marketing order. This rule reapportions the processor membership such that the three processor members and alternate members will be selected from the production area at-large rather than from a specific district. With nine out of ten members present (the District 2 processor position is vacant), the Committee unanimously recommended this change at a meeting held on May 30, 2012, with a request that the change be made effective by July 1, 2013.

Section 927.20(b) establishes the Processed Pear Committee consisting of ten members. Three members are growers, three members are handlers, three members are processors, and one member represents the public. For each member, there are two alternate members, designated as the ''first alternate'' and the ''second alternate,'' respectively. Committee membership is apportioned among two districts. Section 927.11(b) defines District 1 as the State of Washington and District 2 as the State of Oregon. Prior to this action, District 1 was represented by two grower members, two handler members, and two processor members. District 2 was represented by one grower member, one handler member, and one processor member.

The order provides in § 927.20(c) that USDA, upon recommendation of the Committee, may reapportion members among districts, may change the number of members and alternate members, and may change the composition by changing the ratio of members, including their alternate members.

This rule adds a new § 927.150 to the order's administrative rules and regulations reapportioning the processor membership such that the three processor members and alternate members will be selected from the production area at-large rather than from a specific district. The Committee recommended this change because there are no longer any pear processors in District 2, and the District 2 processor member and alternate member positions on the Committee are currently vacant. This change results in more effective representation of the processed pear industry by allowing the Committee to fill these vacant positions with processors from District 1.

Reapportioning the processor membership will allow all processor member and alternate member positions to be filled. The Committee recommended maintaining the three processor member positions, but specified that such members and alternate members may be located in either district. The regulatory language includes flexibility that provides opportunity for representation from District 2 should a processor once again process pears in that district.

Final Regulatory Flexibility Analysis

Pursuant to requirements set forth in the Regulatory Flexibility Act (RFA) (5 U.S.C. 601–612), the Agricultural Marketing Service (AMS) has considered the economic impact of this action on small entities. Accordingly, AMS has prepared this final regulatory flexibility analysis.

The purpose of the RFA is to fit regulatory actions to the scale of business subject to such actions in order that small businesses will not be unduly or disproportionately burdened. Marketing orders issued pursuant to the Act, and rules issued thereunder, are unique in that they are brought about through group action of essentially small entities acting on their own behalf. Thus, both statutes have small entity orientation and compatibility.

There are approximately 1,500 producers of processed pears in the regulated production area and approximately 46 handlers of processed pears subject to regulation under the order. Small agricultural producers are defined by the Small Business Administration (SBA) (13 CFR 121.201) as those having annual receipts of less than $750,000, and small agricultural service firms are defined as those whose annual receipts are less than $7,000,000.

According to the Noncitrus Fruits and Nuts 2011 Preliminary Summary issued in March 2012 by the National Agricultural Statistics Service, the total farm-gate value of summer/fall processed pears grown in Oregon and Washington for 2011 was $35,315,000. Based on the number of processed pear producers in Oregon and Washington, the average gross revenue for each producer can be estimated at approximately $23,543. Furthermore, based on Committee records, the Committee has estimated that all of the Oregon-Washington pear handlers currently ship less than $7,000,000 worth of processed pears each on an annual basis. From this information, it is concluded that the majority of producers and handlers of Oregon and Washington processed pears may be classified as small entities.

There are three pear processing plants in the production area, all currently located in Washington. All three pear processors would be considered large entities under the SBA's definition of small businesses.

This rule adds a new § 927.150 to the order's administrative rules and regulations reapportioning the processor membership such that the three processor members will be selected from the production area at-large. This rule will be effective July 1, 2013. Authority for reapportioning the Committee is provided in § 927.20(c) of the order.

The Committee believes that this action will not negatively impact producers, handlers, or processors in terms of cost. The benefits for this rule are not expected to be disproportionately greater or less for small producers, handlers, or processors than for larger entities.

The Committee discussed alternatives to this rule, including leaving the District 2 processor member and alternate member positions vacant. However, the Committee believes that three members should continue to represent processors on the Committee, except the representative should be chosen from the production area at-large rather than from a specific district.

In accordance with the Paperwork Reduction Act of 1995, (44 U.S.C. chapter 35), the order's information collection requirements have been previously approved by the Office of Management and Budget (OMB) and assigned OMB No. 0581–0189, Generic Fruit Crops. No changes in those requirements as a result of this action are necessary. Should any changes become necessary, they will be submitted to OMB for approval.

Additional reporting or recordkeeping requirements will not be imposed on either small or large processed pear handlers. As with all Federal marketing order programs, reports and forms are periodically reviewed to reduce information requirements and duplication by industry and public sector agencies.

As noted in the initial regulatory flexibility analysis, USDA has not identified any relevant Federal rules that duplicate, overlap or conflict with this final rule.

AMS is committed to complying with the E-Government Act, to promote the use of the Internet and other information technologies to provide increased opportunities for citizen access to Government information and services, and for other purposes.

In addition, the Committee's meeting was widely publicized throughout the Oregon-Washington pear industry and all interested persons were invited to attend and participate in Committee deliberations on all issues. Like all Committee meetings, the May 30, 2012, meeting was a public meeting and all entities, both large and small, were able to express views on this issue.

A proposed rule concerning this action was published in the **Federal Register** on December 5, 2012 (77 FR 72245). The Committee made copies of the proposed rule available to the processed pear industry. Finally, the rule was made available through the Internet by USDA and the Office of the Federal Register. A 60-day comment period ending February 4, 2013, was provided to allow interested persons to respond to the proposal. No comments were received.

A small business guide on complying with fruit, vegetable, and specialty crop marketing agreements and orders may be viewed at: *www.ams.usda.gov/MarketingOrderSmallBusinessGuide.* Any questions about the compliance guide should be sent to Jeffrey Smutny at the previously mentioned address in the **FOR FURTHER INFORMATION CONTACT** section.

After consideration of all relevant matter presented, including the information and recommendation submitted by the Committee and other available information, it is hereby found that this rule, as hereinafter set forth, will tend to effectuate the declared policy of the Act.

List of Subjects in 7 CFR Part 927

Marketing agreements, Pears, Reporting and recordkeeping requirements.

For the reasons set forth in the preamble, 7 CFR part 927 is amended as follows:

PART 927—PEARS GROWN IN OREGON AND WASHINGTON

■ 1. The authority citation for 7 CFR part 927 continues to read as follows:

Authority: 7 U.S.C. 601–674.

■ 2. An undesignated center heading and § 927.150 are added to read as follows:

Administrative Bodies

§ 927.150 Reapportionment of the Processed Pear Committee.

Pursuant to § 927.20(c), on and after July 1, 2013, the 10-member Processed Pear Committee is reapportioned and shall consist of three grower members, three handler members, three processor members, and one member representing the public. For each member, there are two alternate members, designated as the ''first alternate'' and the ''second alternate,'' respectively. District 1, the State of Washington, shall be represented by two grower members and two handler members. District 2, the State of Oregon, shall be represented by one grower member and one handler member. Processor members may be from District 1, District 2, or from both districts.

Dated: April 18, 2013.

David R. Shipman,

Administrator, Agricultural Marketing Service.

[FR Doc. 2013–09722 Filed 4–23–13; 8:45 am]

BILLING CODE 3410–02–P

DEPARTMENT OF TRANSPORTATION

Federal Aviation Administration

14 CFR Part 39

[Docket No. FAA–2012–0413; Directorate Identifier 2011–NM–257–AD; Amendment 39–17441; AD 2013–08–23]

RIN 2120–AA64

Airworthiness Directives; The Boeing Company Airplanes

AGENCY: Federal Aviation Administration (FAA), DOT.

ACTION: Final rule.

SUMMARY: We are adopting a new airworthiness directive (AD) for all The Boeing Company Model DC–10–10, DC–10–10F, DC–10–15, DC–10–30, DC–10–30F (KC–10A and KDC–10), DC–10–40, DC–10–40F, MD–10–10F, MD–10–30F, MD–11, and MD–11F airplanes. This

AD was prompted by fuel system reviews conducted by the manufacturer. This AD requires adding design features to detect electrical faults and to detect a pump running in an empty fuel tank. We are issuing this AD to reduce the potential of ignition sources inside fuel tanks, which, in combination with flammable fuel vapors, could result in fuel tank explosions and consequent loss of the airplane.

DATES: This AD is effective May 29, 2013.

Examining the AD Docket

You may examine the AD docket on the Internet at *http://www.regulations.gov;* or in person at the Docket Management Facility between 9 a.m. and 5 p.m., Monday through Friday, except Federal holidays. The AD docket contains this AD, the regulatory evaluation, any comments received, and other information. The address for the Docket Office (phone: 800–647–5527) is Document Management Facility, U.S. Department of Transportation, Docket Operations, M–30, West Building Ground Floor, Room W12–140, 1200 New Jersey Avenue SE., Washington, DC 20590.

FOR FURTHER INFORMATION CONTACT: Serj Harutunian, Aerospace Engineer, Propulsion Branch, ANM–140L, FAA, Los Angeles Aircraft Certification Office (ACO), 3960 Paramount Boulevard, Lakewood, California 90712–4137; phone: 562–627–5254; fax: 562–627–5210; email: *serj.harutunian@faa.gov.*

SUPPLEMENTARY INFORMATION:

Discussion

We issued a notice of proposed rulemaking (NPRM) to amend 14 CFR part 39 to include an AD that would apply to the specified products. That NPRM published in the **Federal Register** on April 18, 2012 (77 FR 23166). That NPRM proposed to require adding design features to detect electrical faults, to detect a pump running in an empty fuel tank, and to ensure that a fuel pump's operation is not affected by certain conditions.

Comments

We gave the public the opportunity to participate in developing this AD. The following presents the comments received on the proposal (77 FR 23166, April 18, 2012) and the FAA's response to each comment.

Support for NPRM (77 FR 23166, April 18, 2012)

Airline Pilots Association International (ALPA) supports the language and intent of the NPRM (77 FR 23166, April 18, 2012), and agreed that the proposed actions will enhance safety.

Request To Delay AD Pending Release of Service Information

Two commenters requested that we delay issuing the AD until Boeing has released service information. (Specific modifications and solutions were not included in the NPRM (77 FR 23166, April 18, 2012).)

Noting that Boeing had planned to issue several service bulletins to prevent the identified unsafe condition, FedEx requested that we delay issuing the AD until Boeing has released relevant service information. FedEx recommended that we coordinate with Boeing on recommendations to address the unsafe condition.

UPS requested that we extend the comment period until a minimum of 45 days after publication of all associated service bulletins to provide operators sufficient information to make the design changes.

We do not agree to delay issuance of this AD. We have identified a potential unsafe condition that needs to be corrected; however, Boeing has not finalized service information to address that condition. In light of the unsafe condition, we have determined that we cannot delay issuance of this AD, and must proceed without service information. We find that the 60-month time frame specified in paragraph (g) of this AD will provide adequate time for issuance and implementation of service information. We have not changed this final rule regarding this issue.

Request To Revise Applicability

FedEx and Boeing requested that we revise the applicability to specifically exclude airplanes on which the auxiliary fuel tanks have been removed. FedEx reported that it has modified several MD–11s and MD–10s by removing the forward auxiliary tanks or center auxiliary tanks, as well as the fuel pumps and related hardware.

We agree that removal of the auxiliary fuel tank eliminates the identified unsafe condition. We have changed paragraph (g) in this final rule to exclude airplanes when Boeing-installed auxiliary fuel tanks are removed.

Request To Clarify Intent of Proposed Actions

FedEx stated that certain language in the NPRM (77 FR 23166, April 18, 2012) may be too broad. By way of example, FedEx cited the requirement to add design features ''to detect electrical faults.'' Inferring that this required detecting all electrical faults, FedEx asserted that, even if a device could detect all electrical faults, the cost of its installation would be prohibitive. FedEx recommended limiting the requirement to specify detecting ''certain'' electrical faults.

We disagree that it is necessary to change the AD. The NPRM (77 FR 23166, April 18, 2012) intentionally described certain failure conditions in broad terms. The intent was to provide operators unrestricted options to define design changes based on individual safety assessments. Certain electrical faults may be single failures or a combination of failures such as phase-to-phase shorts, phase-to-ground shorts, and over-voltage or over-current electrical failure conditions.

Request To Revise Cost Estimate

FedEx questioned how the FAA determined the estimated cost of the modification, since the NPRM (77 FR 23166, April 18, 2012) provided no information about specific proposed modifications or required parts. FedEx suggested that the estimated cost would be different for each fleet type. UPS questioned the accuracy of the cost estimates in the NPRM, given the lack of technical data.

Based on current efforts developing service information, Boeing estimated that modification labor costs could vary from 111 to 280 hours depending on the number of pumps on an airplane. Boeing also reported that the AD affects about 341 U.S.-registered airplanes (not 180 airplanes, as stated in the NPRM (77 FR 23166, April 18, 2012)). Boeing requested that we revise the costs of compliance accordingly.

The estimated costs in the NPRM (77 FR 23166, April 18, 2012) were based on recent design change solutions installed on similar center wing tanks on transport category airplanes. We have revised the cost estimate in this final rule to reflect Boeing's updated figures, including increased work hours (152 hours) and parts costs ($137,500), based on an average of 10 pumps per airplane. No single cost figure will be accurate for all operators, however, since labor and parts costs will vary depending on the type of certified design change solutions provided by the operators.

Request for Terminating Action

UPS stated that overall safety would be better met if protective devices (fault current detectors) were installed for all 17 pumps on its Model MD–11 airplanes—regardless of tank location. UPS requested that we revise the NPRM (77 FR 23166, April 18, 2012) to specify that installing fault current detectors

terminates the 18-month repetitive inspection requirement on the ''epocast'' fuel pump connector, part number (P/N) 60–84351, as mandated by AD 2002–13–10, Amendment 39–12798 (67 FR 45053, July 8, 2002), or AD 2011–11–05, Amendment 39–16704 (76 FR 31462, June 1, 2011). (Those ADs address the same unsafe condition identified in this AD, on the same affected airplanes.)

We agree that compliance with the requirements of this AD is considered terminating action for the two referenced ADs. Physical inspection of all pumps every 18 months would be labor intensive and time consuming. Further, Boeing has not provided service information to otherwise preclude use of any other pumps during flight. We have changed paragraph (g)(1) in this final rule to require protective devices on electrically powered alternate current (AC) fuel pumps installed in fuel tanks that normally empty during flight. (This proposed requirement in the NPRM (77 FR 23166, April 18, 2012) extended to any electrically powered fuel pump in those tanks.) We have added new paragraph (h) in this final rule to terminate the 18-month repetitive inspections for all pumps, regardless whether they are installed in a tank that normally empties, affected by AD 2002–13–10, Amendment 39–12798 (67 FR 45053, July 8, 2002), or AD 2011–11–05, Amendment 39–16704 (76 FR 31462, June 1, 2011), after accomplishment of paragraph (g)(1) of this AD.

Request To Expand or Remove Automatic Shutoff Limits

Paragraph (g)(2) of the NPRM (77 FR 23166, April 18, 2012) would require additional design features that will automatically shut off a dry-running pump in an empty tank within 60 seconds if the flight crew does not shut it off. FedEx and UPS stated that their Model MD–11 and MD–10 airplanes already have design features installed by the original equipment manufacturer (OEM) that shut off the affected pumps automatically, but will not meet the prescribed 60-second time limit. The commenters asserted that a system design change is not necessary.

We agree. Model MD–11 and MD–10 airplanes with two-person flight crews already have OEM-installed equipment designed to shut off the fuel pumps automatically. We agree that the automatic shut-off time for two-person flight-crew airplanes, which have design features that were originally installed by the airplane manufacturer, may exceed 60 seconds. But for airplanes with three-person flight crews, such as Model DC–10 airplanes that do not have OEM-installed equipment, any fuel pump running in an empty tank must be manually shut off by a flight crew within 60 seconds. In either case, regardless of the number of flight crew, all airplanes must be in compliance with the requirements of paragraph (g)(4) of this AD.

Request To Require Airworthiness Limitations

Boeing commented that the proposed rule does not mandate any airworthiness limitations instructions (ALIs) or critical design configuration control limitations (CDCCLs) regarding repetitive inspections or functional checks applicable to the proposed changes. Boeing recommended that we add a requirement to ''incorporate and comply with any related Airworthiness Limitations.''

We agree to provide clarification. Paragraph (g) in this final rule requires that the design changes be compliant with 14 CFR Section 25.981(a) and (b) at amendment level 25–125. These design changes including any associated ALIs or CDCCLs must be approved by the Manager of the Los Angeles Aircraft Certification Office.

Additional Changes to NPRM (77 FR 23166, April 18, 2012)

In response to requests by Boeing, we have revised paragraphs (g)(2) and (g)(3) in this final rule to clarify the requirements associated with the airplane flight manual supplement (AFMS), and we have revised paragraph (g)(4) in this final rule to clarify that the requirement is limited to airplanes with tanks that normally empty during flight.

We have revised the description of the required actions in the preamble of this final rule to remove the requirement to ''ensure that a fuel pump's operation is not affected by certain conditions,'' because those requirements will be incorporated by compliance to 14 CFR Section 25.981(a) and (b) at amendment level 25–125. We disagree with the request to define certain conditions because the AD must allow for a broader interpretation for all airplanes affected by this AD. We have not changed the final rule regarding this issue.

Conclusion

We reviewed the relevant data, considered the comments received, and determined that air safety and the public interest require adopting the AD with the changes described previously. We also determined that these changes will not increase the economic burden on any operator or increase the scope of the AD.

Costs of Compliance

We estimate that this AD affects 341 airplanes of U.S. registry. We estimate the following costs to comply with this AD, based on the costs of similar supplemental type certificate (STC) installations, and considering an average of 10 pumps per airplane:

ESTIMATED COSTS

Action	Labor cost	Parts cost	Cost per product	Cost on U.S. operators
Installing design features	152 work-hours × $85 per hour = $12,920	$137,500	$150,420	$51,293,220

Authority for this Rulemaking

Title 49 of the United States Code specifies the FAA's authority to issue rules on aviation safety. Subtitle I, section 106, describes the authority of the FAA Administrator. Subtitle VII: Aviation Programs, describes in more detail the scope of the Agency's authority.

We are issuing this rulemaking under the authority described in Subtitle VII, Part A, Subpart III, Section 44701: ''General requirements.'' Under that section, Congress charges the FAA with promoting safe flight of civil aircraft in air commerce by prescribing regulations for practices, methods, and procedures the Administrator finds necessary for safety in air commerce. This regulation is within the scope of that authority because it addresses an unsafe condition that is likely to exist or develop on products identified in this rulemaking action.

Regulatory Findings

This AD will not have federalism implications under Executive Order 13132. This AD will not have a substantial direct effect on the States, on the relationship between the national

government and the States, or on the distribution of power and responsibilities among the various levels of government.

For the reasons discussed above, I certify that this AD:

(1) Is not a ''significant regulatory action'' under Executive Order 12866,

(2) Is not a ''significant rule'' under DOT Regulatory Policies and Procedures (44 FR 11034, February 26, 1979),

(3) Will not affect intrastate aviation in Alaska, and

(4) Will not have a significant economic impact, positive or negative, on a substantial number of small entities under the criteria of the Regulatory Flexibility Act.

List of Subjects in 14 CFR Part 39

Air transportation, Aircraft, Aviation safety, Incorporation by reference, Safety.

Adoption of the Amendment

Accordingly, under the authority delegated to me by the Administrator, the FAA amends 14 CFR part 39 as follows:

PART 39—AIRWORTHINESS DIRECTIVES

■ 1. The authority citation for part 39 continues to read as follows:

Authority: 49 U.S.C. 106(g), 40113, 44701.

§ 39.13 [Amended]

■ 2. The FAA amends § 39.13 by adding the following new airworthiness directive (AD):

2013–08–23 The Boeing Company: Amendment 39–17441; Docket No. FAA–2012–0413; Directorate Identifier 2011–NM–257–AD.

(a) Effective Date

This AD is effective May 29, 2013.

(b) Affected ADs

Accomplishment of the requirements of this AD terminates certain requirements of AD 2002–13–10, Amendment 39–12798 (67 FR 45053, July 8, 2002), and AD 2011–11–05, Amendment 39–16704 (76 FR 31462, June 1, 2011).

(c) Applicability

This AD applies to all The Boeing Company Model DC–10–10, DC–10–10F, DC–10–15, DC–10–30, DC–10–30F (KC–10A and KDC–10), DC–10–40, DC–10–40F, MD–10–10F, MD–10–30F, MD–11, and MD–11F airplanes; certificated in any category.

(d) Subject

Joint Aircraft System Component (JASC)/ Air Transport Association (ATA) of America Code 28, Fuel.

(e) Unsafe Condition

This AD was prompted by fuel system reviews conducted by the manufacturer. We are issuing this AD to reduce the potential of ignition sources inside fuel tanks, which, in combination with flammable fuel vapors, could result in fuel tank explosions and consequent loss of the airplane.

(f) Compliance

Comply with this AD within the compliance times specified, unless already done.

(g) Criteria for Operation

As of 60 months after the effective date of this AD, no person may operate any airplane affected by this AD unless an amended type certificate or supplemental type certificate that incorporates the design features and requirements described in paragraphs (g)(1) through (g)(4) of this AD has been approved by the Manager, Los Angeles Aircraft Certification Office (ACO), FAA, and those design features are installed on the airplane to meet the criteria specified in 14 CFR Section 25.981(a) and (d), at amendment level 25–125. For airplanes on which Boeing-installed auxiliary fuel tanks are removed, the actions specified in this AD are not required.

(1) *For all airplanes:* Each electrically powered alternate current (AC) fuel pump installed in any fuel tank that normally empties during flight—such as center wing tanks, auxiliary fuel tanks installed by the airplane manufacturer, and tail tanks—must have a protective device installed to detect electrical faults that can cause arcing and burn through of the fuel pump housing and pump electrical connector. The same device must shut off the pump by automatically removing electrical power from the pump when such faults are detected. When a fuel pump is shut off resulting from detection of an electrical fault, the device must stay latched off, until the fault is cleared through maintenance action and the pump is verified safe for operation.

(2) *For airplanes with a 2-person flight crew:* Additional design features, if not originally installed by the airplane manufacturer, must be installed to meet 3 criteria: To detect a running fuel pump in a tank that is normally emptied during flight, to provide an indication to the flight crew that the tank is empty, and to automatically shut off that fuel pump. The prospective pump indication and shutoff system must automatically shut off each pump in case the flight crew does not shut off a pump running dry in an empty tank within 60 seconds after each fuel tank is emptied. An airplane flight manual supplement (AFMS) that includes flight crew manual pump shutoff procedures in the Limitations Section of the AFMS must be submitted to the Los Angeles ACO, FAA, for approval.

(3) *For airplanes with a 3-person flight crew:* Additional design features, if not originally installed by the airplane manufacturer, must be installed to detect when a fuel pump in a tank that is normally emptied during flight is running in an empty fuel tank, and provide an indication to the flight crew that the tank is empty. The flight engineer must manually shut off each pump running dry in an empty tank within 60 seconds after the tank is emptied. The AFMS Limitations section must be revised to specify that this pump shutoff must be done by the flight engineer.

(4) *For all airplanes with tanks that normally empty during flight:* Separate means must be provided to detect and shut off a pump that was previously commanded to be shut off automatically or manually but remained running in an empty tank during flight.

(h) Terminating Action in Related ADs

Accomplishment of the actions required by paragraph (g)(1) of this AD terminates the 18-month repetitive inspections and tests required by paragraph (a) of AD 2002–13–10, Amendment 39–12798 (67 FR 45053, July 8, 2002), and the 18-month repetitive inspections required by paragraph (j) of AD 2011–11–05, Amendment 39–16704 (76 FR 31462, June 1, 2011), for pumps affected by those ADs, regardless whether the pump is installed in a tank that normally empties, provided the remaining actions required by those two ADs have been accomplished.

(i) Alternative Methods of Compliance (AMOCs)

(1) The Manager, Los Angeles Aircraft Certification Office (ACO), FAA, has the authority to approve AMOCs for this AD, if requested using the procedures found in 14 CFR 39.19. In accordance with 14 CFR 39.19, send your request to your principal inspector or local Flight Standards District Office, as appropriate. If sending information directly to the manager of the ACO, send it to the attention of the person identified in the Related Information section of this AD.

(2) Before using any approved AMOC, notify your appropriate principal inspector, or lacking a principal inspector, the manager of the local flight standards district office/ certificate holding district office.

(j) Related Information

For more information about this AD, contact Serj Harutunian, Aerospace Engineer, Propulsion Branch, ANM–140L, FAA, Los Angeles ACO, 3960 Paramount Boulevard, Lakewood, California 90712–4137; phone: 562–627–5254; fax: 562–627–5210; email: *serj.harutunian@faa.gov.*

(k) Material Incorporated by Reference

None.

Issued in Renton, Washington, on April 10, 2013.

Jeffrey E. Duven,

Acting Manager, Transport Airplane Directorate, Aircraft Certification Service.

[FR Doc. 2013–09432 Filed 4–23–13; 8:45 am]

BILLING CODE 4910–13–P

DEPARTMENT OF TRANSPORTATION

Federal Aviation Administration

14 CFR Part 39

[Docket No. FAA–2012–1297; Directorate Identifier 2012–SW–100–AD; Amendment 39–17285; AD 2012–25–04]

RIN 2120–AA64

Airworthiness Directives; Eurocopter France Helicopters

AGENCY: Federal Aviation Administration (FAA), Department of Transportation (DOT).

ACTION: Final rule; request for comments.

SUMMARY: We are superseding an existing emergency airworthiness directive (EAD) for Eurocopter France (Eurocopter) Model AS350B3 helicopters with certain part-numbered laminated half-bearings (bearings) and tail rotor (T/R) blades installed. The existing EAD currently requires installing two placards and revising the Rotorcraft Flight Manual (RFM). The EAD also requires certain checks and inspecting and replacing, if necessary, all four bearings. Finally, the EAD requires a one-time removal and inspection of the bearings, and replacing the bearings if necessary. Since we issued that EAD, we have determined that newly-designed helicopters with other part-numbered T/R blades may be affected by this unsafe condition and that the requirements should allow the bearing removal and inspection to be performed before the last flight of the day. This superseding AD removes the bearing and T/R blade part numbers (P/N) from the applicability paragraph and clarifies when the bearing removal and inspection is required. The actions are intended to prevent vibration due to a failed bearing, failure of the T/R, and subsequent loss of control of the helicopter.

DATES: This AD becomes effective May 9, 2013.

We must receive comments on this AD by June 24, 2013.

ADDRESSES: You may send comments by any of the following methods:

- *Federal eRulemaking Docket:* Go to *http://www.regulations.gov.* Follow the online instructions for sending your comments electronically.
- *Fax:* 202–493–2251.
- *Mail:* Send comments to the U.S. Department of Transportation, Docket Operations, M–30, West Building Ground Floor, Room W12–140, 1200 New Jersey Avenue SE., Washington, DC 20590–0001.
- *Hand Delivery:* Deliver to the ''Mail'' address between 9 a.m. and 5 p.m., Monday through Friday, except Federal holidays.

Examining the AD Docket

You may examine the AD docket on the Internet at *http://www.regulations.gov* or in person at the Docket Operations Office between 9 a.m. and 5 p.m., Monday through Friday, except Federal holidays. The AD docket contains this AD, the economic evaluation, any comments received, and other information. The street address for the Docket Operations Office (telephone 800–647–5527) is in the **ADDRESSES** section. Comments will be available in the AD docket shortly after receipt.

For service information identified in this AD, contact American Eurocopter Corporation, 2701 N. Forum Drive, Grand Prairie, TX 75052; telephone (972) 641–0000 or (800) 232–0323; fax (972) 641–3775; or at *http://www.eurocopter.com/techpub.*You may review the referenced service information at the FAA, Office of the Regional Counsel, Southwest Region, 2601 Meacham Blvd., Room 663, Fort Worth, Texas 76137.

FOR FURTHER INFORMATION CONTACT: Robert Grant, Aviation Safety Engineer, Safety Management Group, FAA, 2601 Meacham Blvd., Fort Worth, Texas 76137; telephone (817) 222–5110; email *robert.grant@faa.gov.*

SUPPLEMENTARY INFORMATION:

Comments Invited

This AD is a final rule that involves requirements affecting flight safety, and we did not provide you with notice and an opportunity to provide your comments prior to it becoming effective. However, we invite you to participate in this rulemaking by submitting written comments, data, or views. We also invite comments relating to the economic, environmental, energy, or federalism impacts that resulted from adopting this AD. The most helpful comments reference a specific portion of the AD, explain the reason for any recommended change, and include supporting data. To ensure the docket does not contain duplicate comments, commenters should send only one copy of written comments, or if comments are filed electronically, commenters should submit them only one time. We will file in the docket all comments that we receive, as well as a report summarizing each substantive public contact with FAA personnel concerning this rulemaking during the comment period. We will consider all the comments we receive and may conduct additional rulemaking based on those comments.

Discussion

The European Aviation Safety Agency (EASA), which is the Technical Agent for the Member States of the European Union, has issued EASA Emergency AD No. 2012–0207–E, dated October 5, 2012 (EAD 2012–0207–E), to correct an unsafe condition for Eurocopter Model AS 350 B3 helicopters modified by Modification (MOD) 07 5601. MOD 07 5601 is an integral part of a specific Model AS350B3 configuration, commercially identified as ''AS350B3e'' and is not fitted on Model AS350B3 helicopters of other configurations. EASA advises that premature failures of bearings, P/N 704A33–633–261, installed in combination with T/R blades P/N 355A12.0055.00 or 355A12.0055.01, have recently been detected on AS 350 B3 helicopters in ''AS350B3e'' configuration. Three cases of vibrations originating from the T/R, caused by failure of the bearings, were reported, which were detected in flight. Subsequently, an accident occurred in which the pilot felt strong vibrations from the T/R before losing control of the helicopter. An investigation revealed that prior to the accident, the bearings had been replaced twice on the helicopter due to deterioration. EASA EAD 2012–0207–E requires installing placards and changing the RFM to limit the flight envelope by reducing the Velocity Never Exceed (V_{NE}) true airspeed (TAS) limitation to reduce the dynamic loads on the T/R, a one-time pre-flight inspection and repetitive post-flight inspections of the bearings to detect damage, a one-time ''After Last Flight of the day'' (ALF) inspection (including T/R disassembly), and replacing all bearings if any bearing is damaged.

On October 17, 2012, we issued EAD No. 2012–21–51 for Eurocopter Model AS350B3 helicopters with MOD 07 5601, with bearing P/N 704A33–633–261 in combination with tail rotor blade P/N 355A12.0055.00 or 355A12.0055.01, installed. We sent that EAD to all known U.S. owners and operators of these helicopters. That EAD requires, before further flight, installing two placards on the instrument panel and revising the RFM to reduce the V_{NE} indicated airspeed (IAS) limitation. It also requires, before further flight and thereafter after each flight, visually checking all visible faces of the bearings for separation, a crack, or an extrusion, and replacing the four bearings if there is an extrusion or if there is a separation or a crack on the pressure side bearing greater than 5 millimeters (.196 inches). Lastly, the EAD requires, after the last flight of the day, performing a one-time

inspection of the bearings for a separation, a crack, or an extrusion, and replacing the four bearings if there is a separation, crack, or extrusion. Our EAD differed from EASA EAD 2012–0207–E in that the EASA EAD placard limited TAS, while the placard in our EAD limited IAS.

Actions Since Existing EAD Was Issued

Since we issued EAD 2012–21–51, EASA issued EAD No. 2012–0217–E, dated October 19, 2012 (EAD 2012–0217–E), which superseded EASA EAD 2012–0207–E. EAD 2012–0217–E retains some of the requirements of EAD 2012–207–E, changes the airspeed limitation from TAS to IAS, and requires inserting a temporary engine health check procedure into the RFM. We are not issuing this superseding AD to adopt the revised EASA requirements, because the airspeed limitations in EAD 2012–21–51 currently use IAS, and the revised engine health check procedure does not correct the unsafe condition.

In addition, we have been informed by EASA that newly-designed T/R blades with a P/N not listed in EAD 2012–21–51 have been developed and may be installed on these model helicopters, but will also be affected by the unsafe condition. Additionally, the compliance interval for the bearing removal and inspection required in EAD 2012–21–51 did not allow an operator to perform the inspection prior to the last flight of the day, if desired, and would have required the bearing removal and inspection after the last flight of the day following any bearing replacement, which was not intended when we issued the EAD. Therefore, we are issuing this AD to remove the laminated half-bearing and T/R blade P/Ns from the applicability and revise the language of the removal and inspection paragraph to clarify when that inspection is required.

FAA's Determination

These helicopters have been approved by the aviation authority of France and are approved for operation in the United States. Pursuant to our bilateral agreement with France, EASA, its technical representative, has notified us of the unsafe condition described in the EASA AD. We are issuing this AD because we evaluated all information provided by EASA and determined the unsafe condition exists and is likely to exist or develop on other helicopters of the same type design.

Related Service Information

We reviewed Eurocopter Emergency Alert Service Bulletin (EASB) with two numbers, No. 01.00.65 for the Model AS350B3 helicopters and No. 01.00.24 for the non-FAA type certificated Model AS550C3 helicopters, both Revision 0, and both dated October 4, 2012. The EASB specifies installing two placards on the instrument panel and revising the RFM to limit airspeed to both 100 knots IAS and TAS, on-aircraft checking of the bearings after each flight, and performing a one-time removal and inspection of the bearings. The EASB also defines an RFM procedure in case of in-flight vibrations originating in the tail rotor. Revision 1 of the EASB, dated October 18, 2012, which Eurocopter issued after we issued EAD 2012–21–51, introduced a new procedure for the periodic ''Engine Health Check'' procedure, and specified to remove the placard and RFM changes with the V_{NE} TAS limitation. Revision 2 of the EASB, dated November 2, 2012, accounted for newly designed T/R blades by removing specific part-numbered T/R blades from the Effectivity section of the EASB.

AD Requirements

This AD retains the requirements of EAD 2012–21–51, expands the applicability by removing the half-bearing and the T/R blade P/Ns from the applicability paragraph, clarifies that the removal and inspection of the bearings is not a daily inspection, and clarifies that the inspection of the bearings may be performed prior to the last flight of the day (not after the last flight of the day).

Differences Between This AD and the EASA AD

The EASA AD requires removing the placard and RFM changes with the TAS limitation and replacing it with an IAS limitation. Since the FAA EAD did not include the TAS limitation, this AD does not need to require removing it. This AD does not require inserting the temporary engine health check procedure in the RFM.

Interim Action

We consider this AD interim action. The design approval holder is currently developing a modification that will address the unsafe condition specified in this AD. Once this modification is developed, approved, and available, we might consider additional rulemaking.

Costs of Compliance

We estimate that this AD will affect 18 helicopters of U.S. Registry.

We estimate that operators may incur the following costs in order to comply with this AD. Installing a placard and revising the RFM will require about .5 work-hour, at an average labor rate of $85 per hour, for a cost per helicopter of $43 and a total cost to U.S. operators of $774. Disassembling and inspecting the bearings will require about 6 work-hours, at an average labor rate of $85 per hour, for a cost per helicopter of $510 and a total cost to U.S. operators of $9,180.

If necessary, replacing the bearings installed on the aircraft will require about 6 work-hours, at an average labor rate of $85, and required parts will cost $2,415, for a cost per helicopter of $2,925.

FAA's Justification and Determination of the Effective Date

The short compliance time involved is required because the previously described unsafe condition can adversely affect both the structural integrity and controllability of the helicopter. Therefore, because several of the corrective actions are required before further flight, this AD must be issued immediately.

Since an unsafe condition exists that requires the immediate adoption of this AD, we determined that notice and opportunity for public comment before issuing this AD are impracticable and that good cause exists for making this amendment effective in less than 30 days.

Authority for This Rulemaking

Title 49 of the United States Code specifies the FAA's authority to issue rules on aviation safety. Subtitle I, section 106, describes the authority of the FAA Administrator. ''Subtitle VII: Aviation Programs,'' describes in more detail the scope of the Agency's authority.

We are issuing this rulemaking under the authority described in ''Subtitle VII, Part A, Subpart III, Section 44701: General requirements.'' Under that section, Congress charges the FAA with promoting safe flight of civil aircraft in air commerce by prescribing regulations for practices, methods, and procedures the Administrator finds necessary for safety in air commerce. This regulation is within the scope of that authority because it addresses an unsafe condition that is likely to exist or develop on products identified in this rulemaking action.

Regulatory Findings

We determined that this AD will not have federalism implications under Executive Order 13132. This AD will not have a substantial direct effect on the States, on the relationship between the national Government and the States, or on the distribution of power and responsibilities among the various levels of government.

For the reasons discussed, I certify that this AD:

1. Is not a ''significant regulatory action'' under Executive Order 12866;

2. Is not a ''significant rule'' under DOT Regulatory Policies and Procedures (44 FR 11034, February 26, 1979);

3. Will not affect intrastate aviation in Alaska to the extent that it justifies making a regulatory distinction; and

4. Will not have a significant economic impact, positive or negative, on a substantial number of small entities under the criteria of the Regulatory Flexibility Act.

We prepared an economic evaluation of the estimated costs to comply with this AD and placed it in the AD docket.

List of Subjects in 14 CFR Part 39

Air transportation, Aircraft, Aviation safety, Incorporation by reference, Safety.

Adoption of the Amendment

Accordingly, under the authority delegated to me by the Administrator, the FAA amends 14 CFR part 39 as follows:

PART 39—AIRWORTHINESS DIRECTIVES

■ 1. The authority citation for part 39 continues to read as follows:

Authority: 49 U.S.C. 106(g), 40113, 44701.

§ 39.13 [Amended]

■ 2. The FAA amends § 39.13 by adding the following new airworthiness directive (AD):

2012–25–04 Eurocopter France: Amendment 39–17285; Docket No. FAA–2012–1297; Directorate Identifier 2012–SW–100–AD.

(a) Applicability

This AD applies to Eurocopter France (Eurocopter) Model AS350B3 helicopters with Modification (MOD) 07 5601 installed, certificated in any category.

Note 1 to paragraph (a): MOD 07 5601 is an integral part of a specific Model AS350B3 configuration, commercially identified as ''AS350B3e'' and is not fitted on Model AS350B3 helicopters of other configurations.

(b) Unsafe Condition

This AD defines the unsafe condition as severe vibrations due to failure of laminated half-bearings (bearings). This condition could result in failure of the tail rotor and subsequent loss of control of the helicopter.

(c) Affected ADs

This AD supersedes Emergency AD No. 2012–21–51, Directorate Identifier 2012–SW–095–AD, dated October 17, 2012.

(d) Effective Date

This AD becomes effective May 9, 2013.

(e) Compliance

You are responsible for performing each action required by this AD within the specified compliance time unless it has already been accomplished prior to that time.

(f) Required Actions

(1) Before further flight:

(i) Install a velocity never exceed (V_{NE}) placard that reads as follows on the instrument panel in full view of the pilot and co-pilot with 6-millimeter red letters on a white background:

VNE LIMITED TO 100 KTS IAS.

(ii) Replace the IAS limit versus the flight altitude placard located inside the cabin on the center post with the placard as depicted in Table 1 to paragraph (f) of this AD:

TABLE 1 TO PARAGRAPH (F)

VNE POWER ON	
Hp (ft)	IAS (kts)
0	100
2000	97
4000	94
6000	91
8000	88
10000	85
12000	82
14000	79
16000	76
18000	73
20000	70
22000	67
Valid for VNE POWER OFF	

(2) Before further flight, revise the Rotorcraft Flight Manual (RFM) by inserting a copy of this AD into the RFM or by making pen and ink changes as follows:

(i) Revise paragraph 2.3 of the RFM by inserting the following:

VNE limited to 100 kts IAS.

(ii) Revise paragraph 2.6 of the RFM by inserting Table 2 to Paragraph (f) of this AD.

TABLE 2 TO PARAGRAPH (F)

VNE POWER ON	
Hp (ft)	IAS (kts)
0	100
2000	97
4000	94
6000	91
8000	88
10000	85
12000	82
14000	79
16000	76
18000	73
20000	70
22000	67
Valid for VNE POWER OFF	

(iii) Add the following as paragraph 3.3.3 to the RFM:

3.3.3 IN-FLIGHT VIBRATIONS FELT IN THE PEDALS

Symptom:

IN-FLIGHT VIBRATIONS FELT IN THE PEDALS

1. CHECK PEDAL EFFECTIVENESS
2. SMOOTHLY REDUCE THE SPEED TO VY
3. AVOID SIDESLIP AS MUCH AS POSSIBLE

LAND AS SOON AS POSSIBLE

(3) Before further flight, and thereafter after each flight, without exceeding 3 hours time-in-service between two checks, visually check each bearing as follows:

(i) Position both tail rotor blades horizontally.

(ii) Apply load (F) by hand, perpendicular to the pressure face of one tail rotor blade (a), as shown in Figure 1 to paragraph (f) of this AD, taking care not to reach the extreme position against the tail rotor hub. The load will deflect the tail rotor blade towards the tail boom.

(iii) While maintaining the load, check all the visible faces of the bearings (front and side faces) in area B of DETAIL A of Figure 1 to paragraph (f) of this AD for separation between the elastomer and metal parts, a crack in the elastomer, or an extrusion (see example in Figure 2 to paragraph (f) of this AD). A flashlight may be used to enhance the check.

BILLING CODE 4910–13–P

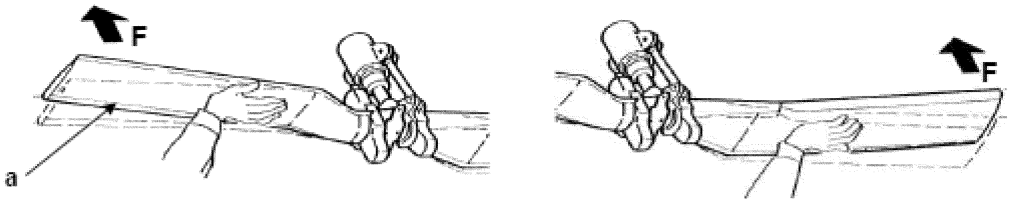

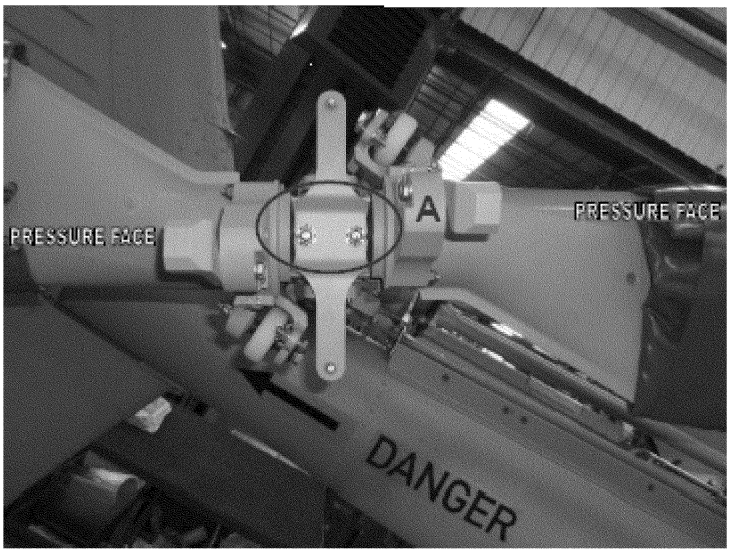

DETAIL A

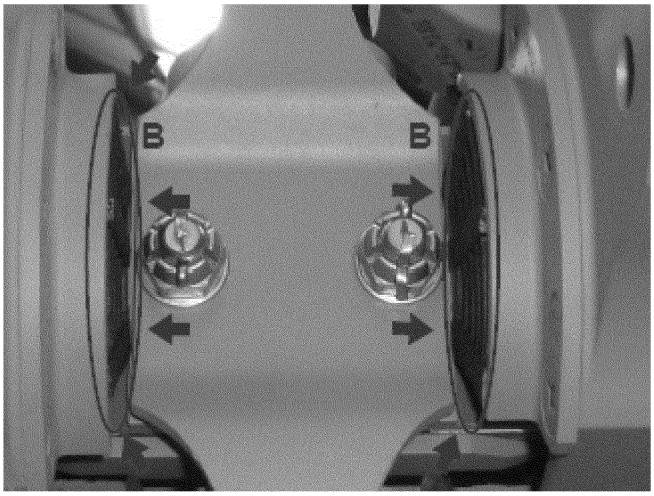

Figure 1 to paragraph (f)

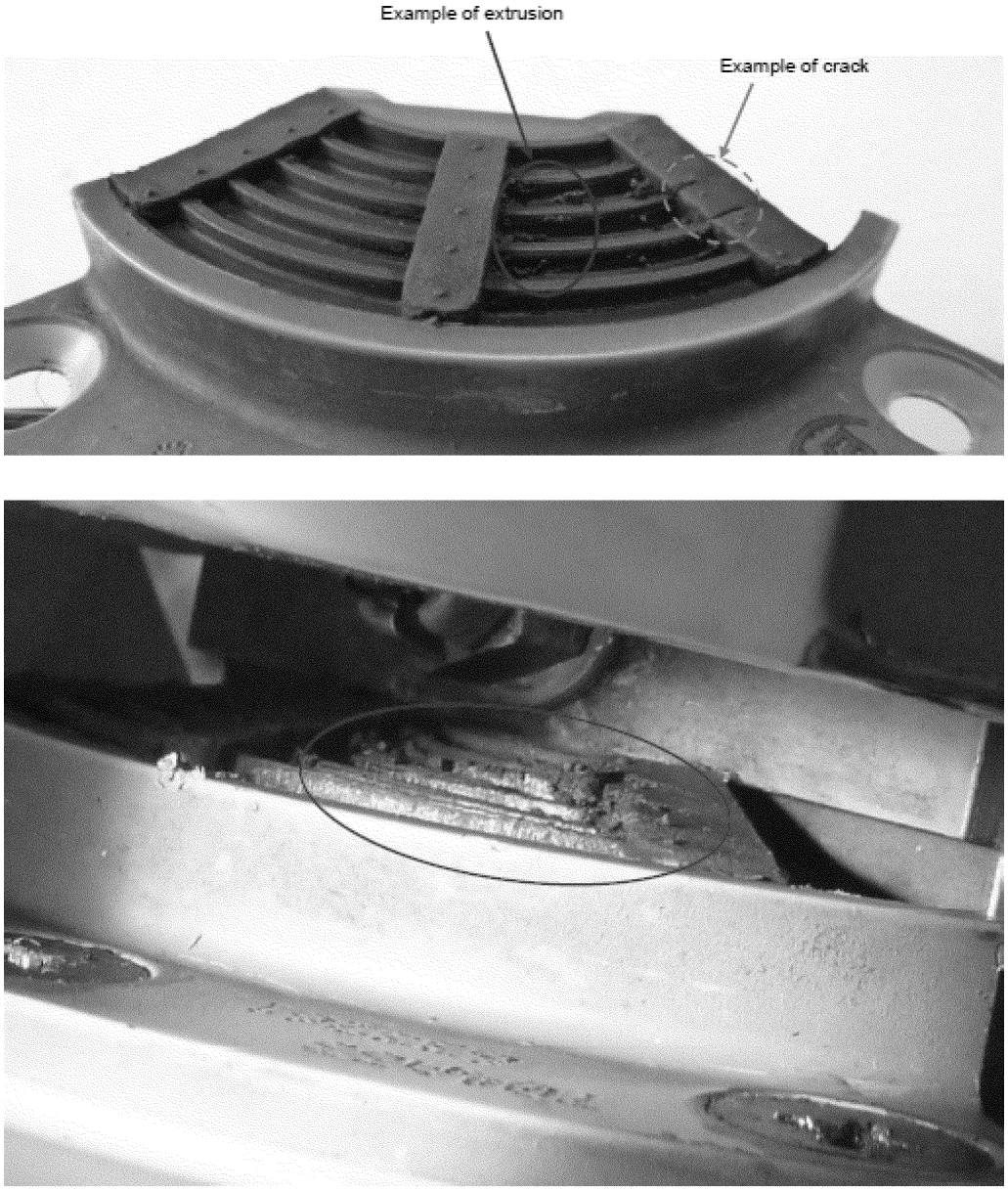

Figure 2 to paragraph (f)

(iv) Repeat paragraphs (f)(3)(i) through (f)(3)(iii) on the other tail rotor blade.

(v) Apply load (G) by hand perpendicular to the suction face of one tail rotor blade as shown in Figure 3 to paragraph (f) of this AD. The load will deflect the tail rotor blade away from the tail boom.

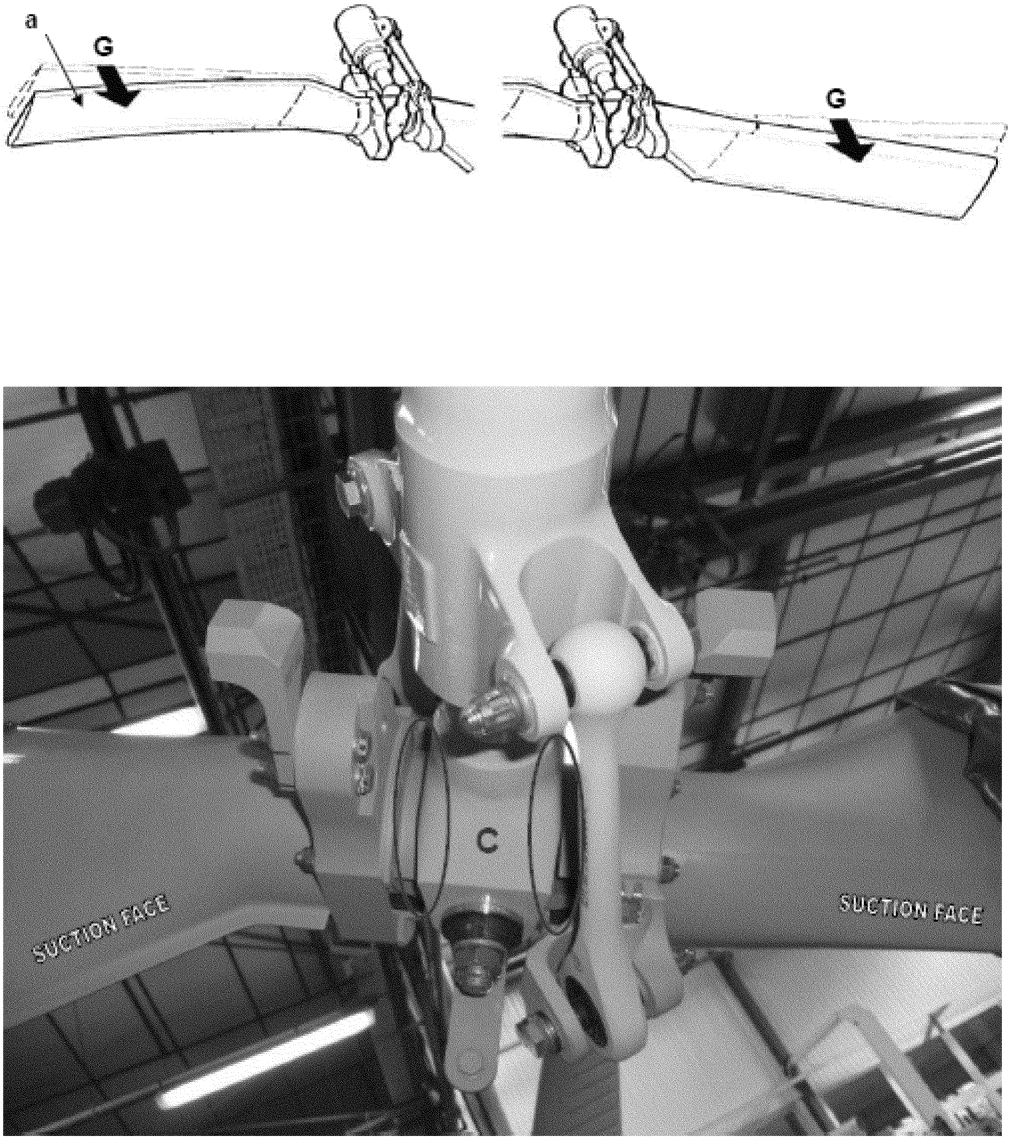

Figure 3 to paragraph (f)

(vi) While maintaining the load, check visible faces of Area C as shown in Figure 3 to paragraph (f) of this AD for any extrusion. A flashlight may be used to enhance the check.

(vii) Repeat paragraphs (f)(3)(v) and (f)(3)(vi) on the other tail rotor blade.

(4) The actions required by paragraphs (f)(3)(i) through (f)(3)(vii) of this AD may be performed by the owner/operator (pilot) holding at least a private pilot certificate, and must be entered into the aircraft records showing compliance with this AD in accordance with 14 CFR 43.9 (a)(1)–(4) and 14 CFR 91.417(a)(2)(v). The record must be maintained as required by 14 CFR 91.173, 121.380, or 135.439.

(5) If there is an extrusion on any bearing, before further flight, replace the four bearings with airworthy bearings.

(6) If there is a separation or a crack on the pressure side bearing, measure the separation or the crack. If the separation or crack is greater than 5 millimeters (.196 inches) as indicated by dimension ''L'' in Figure 4 to paragraph (f), before further flight, replace the four bearings with airworthy bearings.

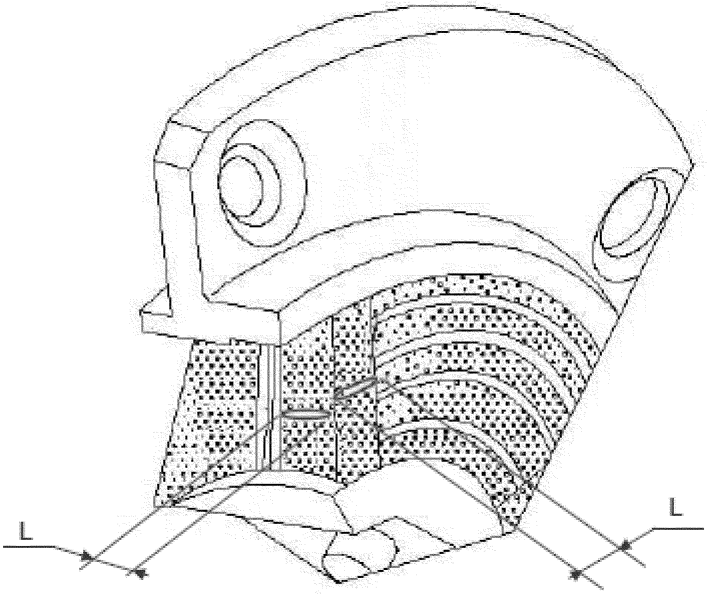

Figure 4 to paragraph (f)

(7) No later than after the last flight of the day, perform a one-time inspection by removing the bearings and inspecting for a separation, a crack, or an extrusion. This inspection is not a daily inspection. If there is a separation, crack, or extrusion, before further flight, replace the four bearings with airworthy bearings.

(g) Special Flight Permits

Special flight permits are prohibited by this AD.

(h) Alternative Methods of Compliance (AMOCs)

(1) The Manager, Safety Management Group, FAA, may approve AMOCs for this AD. Send your proposal to: Robert Grant, Aviation Safety Engineer, Safety Management Group, FAA, 2601 Meacham Blvd., Fort Worth, Texas 76137; telephone (817) 222–5110; email *robert.grant@faa.gov.*

(2) For operations conducted under a 14 CFR part 119 operating certificate or under 14 CFR part 91, subpart K, we suggest that you notify your principal inspector, or lacking a principal inspector, the manager of the local flight standards district office or certificate holding district office, before operating any aircraft complying with this AD through an AMOC.

(3) AMOCs approved previously in accordance with Emergency Airworthiness Directive No. 2012–21–51, dated October 17, 2012, are approved as AMOCs for the corresponding requirements in paragraph (f)(7) of this AD.

(i) Additional Information

(1) Eurocopter Emergency Alert Service Bulletin (EASB) No. 01.00.65, Revision 2, dated November 2, 2012, which is not incorporated by reference, contains additional information about the subject of this AD. For service information identified in this AD, contact American Eurocopter Corporation, 2701 N. Forum Drive, Grand Prairie, TX 75052; telephone (972) 641–0000 or (800) 232–0323; fax (972) 641–3775; or at *http://www.eurocopter.com/techpub.*You may review a copy of the service information at the FAA, Office of the Regional Counsel, Southwest Region, 2601 Meacham Blvd., Room 663, Fort Worth Texas 76137.

(2) The subject of this AD is addressed in European Aviation Safety Agency Emergency AD No. 2012–0217–E, dated October 19, 2012.

(j) Subject

Joint Aircraft Service Component (JASC) Code: 6400: Tail Rotor.

Issued in Fort Worth, Texas, on April 11, 2013.

Lance T. Gant,

Acting Directorate Manager, Rotorcraft Directorate, Aircraft Certification Service.

[FR Doc. 2013–09420 Filed 4–23–13; 8:45 am]

BILLING CODE 4910–13–P

DEPARTMENT OF HOMELAND SECURITY

8 CFR Part 214

[CIS No. 2536–13]

RIN 1615–AC02

DEPARTMENT OF LABOR

Employment and Training Administration

20 CFR Part 655

RIN 1205–AB69

Wage Methodology for the Temporary Non-Agricultural Employment H–2B Program, Part 2

AGENCY: Employment and Training Administration, Labor; U.S. Citizenship and Immigration Services, DHS.

ACTION: Interim final rule; request for comments.

SUMMARY: The Department of Homeland Security (DHS) and the Department of Labor (DOL) (jointly referred to as the Departments) are amending regulations governing certification for the employment of nonimmigrant workers in temporary or seasonal non-agricultural employment. This interim final rule revises how DOL provides the consultation that DHS has determined is necessary to adjudicate H–2B petitions by revising the methodology by which

DOL calculates the prevailing wages to be paid to H–2B workers and U.S. workers recruited in connection with the application for certification; the prevailing wage is then used in petitioning DHS to employ nonimmigrant workers in H–2B status. DOL and DHS are jointly issuing this rule in response to the court's order in *Comité de Apoyo a los Trabajadores Agricolas* v. *Solis,* which vacated portions of DOL's current prevailing wage rate regulation, and to ensure that there is no question that the rule is in effect nationwide in light of other outstanding litigation. This rule also contains certain revisions to DHS's H–2B rule to clarify that DHS is the Executive Branch agency charged with making determinations regarding eligibility for H–2B classification, after consulting with DOL for its advice about matters with which DOL has expertise, particularly, in this case, questions about the methodology for setting the prevailing wage in the H–2B program.

DATES: This interim final rule is effective April 24, 2013. Interested persons are invited to submit written comments on this interim final rule on or before June 10, 2013.

ADDRESSES: You may submit comments, identified by Regulatory Information Number (RIN) 1205–AB69, by any one of the following methods:

- *Federal e-Rulemaking Portal www.regulations.gov.* Follow the Web site instructions for submitting comments.
- *Mail or Hand Delivery/Courier:* Please submit all written comments (including disk and CD–ROM submissions) to Michael Jones, Acting Administrator, Office of Policy Development and Research, Employment and Training Administration, U.S. Department of Labor, 200 Constitution Avenue NW., Room N–5641, Washington, DC 20210.

Please submit your comments by only one method. Comments received by means other than those listed above or received after the comment period has closed will not be reviewed. The Departments will post all comments received on *http://www.regulations.gov* without making any change to the comments, including any personal information provided. The *http://www.regulations.gov* Web site is the Federal e-rulemaking portal and all comments posted there are available and accessible to the public. The Departments caution commenters not to include personal information such as Social Security Numbers, personal addresses, telephone numbers, and email addresses in their comments as such information will become viewable by the public on the *http://www.regulations.gov* Web site. It is the commenter's responsibility to safeguard his or her information. Comments submitted through *http://www.regulations.gov* will not include the commenter's email address unless the commenter chooses to include that information as part of his or her comment.

Postal delivery in Washington, DC, may be delayed due to security concerns. Therefore, the Departments encourage the public to submit comments through the *http://www.regulations.gov* Web site.

Docket: For access to the docket to read background documents or comments received, go to the Federal eRulemaking portal at *http://www.regulations.gov.* The Departments will also make all the comments either Department receives available for public inspection during normal business hours at the Employment and Training Administration (ETA) Office of Policy Development and Research at the above address. If you need assistance to review the comments, DOL will provide you with appropriate aids such as readers or print magnifiers. DOL will make copies of the rule available, upon request, in large print and as an electronic file on computer disk. DOL will consider providing the interim final rule in other formats upon request. To schedule an appointment to review the comments and/or obtain the rule in an alternate format, contact the ETA Office of Policy Development and Research at (202) 693–3700 (VOICE) (this is not a toll-free number) or 1–877–889–5627 (TTY/TDD).

FOR FURTHER INFORMATION CONTACT:

Regarding 8 CFR Part 214: Kevin J. Cummings, Chief, Business and Foreign Workers Division, Office of Policy and Strategy, U.S. Citizenship and Immigration Services, Department of Homeland Security, 20 Massachusetts Ave. NW., Suite 1100, Washington, DC 20529–2120, telephone (202) 272–1470 (not a toll-free call).

Regarding 20 CFR Part 655: William L. Carlson, Ph.D., Administrator, Office of Foreign Labor Certification, ETA, U.S. Department of Labor, 200 Constitution Avenue NW., Room C–4312, Washington, DC 20210; Telephone (202) 693–3010 (this is not a toll-free number). Individuals with hearing or speech impairments may access the telephone number above via TTY by calling the toll-free Federal Information Relay Service at 1–877–889–5627 (TTY/TDD).

SUPPLEMENTARY INFORMATION:

I. The H–2B Program, the Prevailing Wage Methodology and Revisions to 8 CFR 216.2(h)(6) and 20 CFR 655.10(b)

A. The Department of Homeland Security's Role in the H–2B Program

As provided by section 101(a)(15)(H)(ii)(b) of the Immigration and Nationality Act (INA or Act), 8 U.S.C. 1101(a)(15)(H)(ii)(b), the H–2B visa classification for non-agricultural temporary workers is available to a worker ''having a residence in a foreign country which he has no intention of abandoning who is coming temporarily to the United States to perform other [than agricultural] temporary service or labor if unemployed persons capable of performing such service or labor cannot be found in this country.'' Section 214(c)(1) of the INA (8 U.S.C. 1184(c)(1)) requires an importing employer to petition DHS for classification of the prospective temporary worker as an H–2B nonimmigrant as a prerequisite to the worker obtaining an H–2B visa or being granted H–2B status. U.S. Citizenship and Immigration Services (USCIS) is the component agency within DHS that adjudicates H–2B petitions. *See* 8 CFR 214.2(h)(6) *et seq.*

Section 214(c)(1) of the INA requires DHS to consult with ''appropriate agencies of the Government'' before adjudicating an H–2B petition. DHS has determined that, under this statutory provision, it must consult with DOL as part of the process of adjudicating H–2B petitions because DOL is the agency best situated to provide advice regarding whether ''unemployed persons capable of performing such service or labor cannot be found in this country.'' 8 U.S.C. 1101(a)(15)(H)(ii)(b). DHS, in conjunction with DOL, has determined that the best way to provide this consultation is by requiring the employer (other than in the Territory of Guam),[1] prior to filing an H–2B petition, to first apply for a temporary labor certification from the Secretary of Labor. 8 CFR 214.2(h)(6)(iii)(A). The temporary labor certification serves as DOL's advice to DHS that the employer has tried unsuccessfully to recruit sufficient U.S. workers at a DOL-determined prevailing wage for the position for which it now seeks H–2B workers, and that the employer has provided assurance that it will pay its H–2B workers and any successfully recruited U.S. workers at least the same prevailing wage. Thus, the certification serves as expert consultation and advice to USCIS on whether U.S. workers capable of

[1] In the Territory of Guam, the petitioner must apply to the Governor of Guam for a temporary labor certification. *See* 8 CFR 214.2(h)(6)(iii).

performing the services or labor are available, and whether the employment of the foreign worker(s) will adversely affect the wages and working conditions of similarly employed U.S. workers. The fulfillment of the required consultation with DOL in this fashion represents good and efficient government, inasmuch as it avoids potentially significant and unnecessary cost that the federal government would otherwise incur if it was required to replicate within DHS the unique expertise already existing within DOL. DHS and DOL recognize the Congressional aim in enacting the consultation requirement in section 214(c)(1) of the INA to effectively utilize governmental resources by requiring DHS to solicit the expertise of other Federal agencies without having to independently and needlessly develop the same or overlapping expertise simply as a means to question the advice it receives. Under current DHS regulations, an employer may not file a petition with USCIS for an H–2B temporary worker unless it has received a labor certification from the Secretary of Labor (or the Governor of Guam, as appropriate). 8 CFR 214.2(h)(6)(iii)(C), (iv)(A), (vi)(A). DHS relies on DOL's advice in this area, as the appropriate government agency with expertise in labor market questions, to fulfill DHS's statutory duty of determining that unemployed persons capable of performing the relevant service or labor cannot be found in the United States and to approve H–2B petitions. INA 101(a)(15)(H)(ii)(b) (8 U.S.C. 1101(A)(15)(H)(ii)(b)); and INA 214(c)(1), (8 U.S.C. 1184(c)(1)).

B. The Department of Labor's Role in the H–2B Program

The Secretary of Labor's responsibility for the H–2B program is carried out by two agencies within DOL. Applications for temporary labor certification are processed by ETA's Office of Foreign Labor Certification, the agency to which the Secretary of Labor has delegated those responsibilities described in the USCIS H–2B regulations. Enforcement of the attestations and assurances made by employers on H–2B applications granted temporary labor certification is conducted by the Wage and Hour Division (WHD) under enforcement authority delegated to it by DHS on January 16, 2009 (effective January 18, 2009). *See* 8 U.S.C. 1184(c)(14)(B).

C. The Consultative Function in the Administration and Implementation of the H–2B Program

Since 1968, DHS's, and its predecessor INS's, consultation with DOL in the H–2 non-agricultural program has been implemented through the agencies' use of a combination of legislative rules and guidance documents. As noted above, DHS's current consultation with DOL in the H–2B program under Section 214(c)(1) of the INA is based on DHS's regulatory requirement that an employer first obtain a temporary labor certification from the Secretary of Labor establishing that U.S. workers capable of performing the services or labor are not available, and that the employment of the foreign worker(s) will not adversely affect the wages and working conditions of similarly employed U.S. workers. 8 CFR 214.2(h)(6)(iii). The first step in DOL's certification process is the determination of the prevailing wage in the occupation that is the subject of the application for temporary labor certification. DOL has established a methodology for its determination of the prevailing wage rate through regulation, 20 CFR 655.10, and this regulation now requires revision in light of *Comité de Apoyo a los Trabajadores Agricolas (CATA)* v. *Solis,* Civ. No. 09-cv-240, (E.D. Pa.) (March 21, 2013), which is discussed in greater detail below.

DOL's authority to issue its own legislative rules to carry out its duties under the INA has been challenged in litigation. Specifically, a group of employers challenged the regulations DOL issued on February 21, 2012, (77 FR 10038) (2012 H–2B rule) implementing its consultative responsibilities under the H–2B program. The 2012 rule implements all of DOL's responsibilities under the H–2B program except for determining the prevailing wage, which, as noted above, is now set forth in a separate regulation at 20 CFR 655.10. In their challenge to DOL's 2012 H–2B rule, the employers argued that DOL does not have independent rulemaking authority to issue the 2012 rule under the H–2B program. On April 1, 2013, the U.S. Court of Appeals for the Eleventh Circuit upheld a district court decision that granted a preliminary injunction against enforcement of the 2012 H–2B rule on the ground that the employers are likely to prevail on their allegation that DOL lacks H–2B rulemaking authority. *Bayou Lawn & Landscape Servs. et al.* v. *Secretary of Labor,*— F.3d—, 2013 WL 1286129, No. 12–12462 (11th Cir. Apr. 1, 2013). The court stated that, ''DHS was given overall responsibility, including rulemaking authority, for the H–2B program. DOL was designated a consultant. It cannot bootstrap that supporting role into a co-equal one.'' 2013 WL 1286129 at *2.

In substantial contrast, when faced with a similar employer challenge to DOL's rulemaking authority with respect to an H–2B wage rule issued on January 19, 2011 (76 FR 3452) (2011 Wage Rule),[2] the district court in *Louisiana Forestry Ass'n* v. *Solis,* 889 F.Supp.2d 711 (E.D. Pa. 2012), held that DOL does have independent H–2B rulemaking authority. The court stated ''the history of the H–2B program demonstrates Congress's expectation that the DOL would engage in legislative rulemaking * * * at the time of [the Immigration Reform and Control Act (IRCA)]'s enactment, the DOL regulations governing the labor certification process for non-agricultural, unskilled guest workers already had been in place for many years. There is no evidence that Congress intended to alter or disrupt the DOL's rulemaking when it enacted IRCA and created the H–2B visa program.'' 889 F.Supp.2d at 728. The court also approved of DHS's decision to ''consult'' with DOL by adopting the labor certification requirement, finding persuasive the DHS rationale that it does not have the expertise to make labor market determinations. 889 F.Supp.2d at 724–25. Oral argument is currently scheduled for May 2013 in the U.S. Court of Appeals for the Third Circuit in that lawsuit.[3]

Notwithstanding the Eleventh Circuit's decision in *Bayou,* or the Departments' joint issuance of this interim rule, DOL and DHS continue to maintain, as the *Louisiana Forestry Association* court held, that DOL does have independent legislative rulemaking authority for the H–2B program. However, due to these inconsistent court rulings on DOL's authority to issue independent legislative rules, DOL and DHS are issuing this joint regulation revising the prevailing wage methodology in the H–2B program in order to respond to the court order in *CATA* v. *Solis,* and also to dispel questions regarding the respective roles of the two agencies and the validity of DOL's regulations as an appropriate way to implement the consultation specified in section 214(c)(1) of the INA. DHS has determined that, under section 214(c)(1) of the INA, it must consult with DOL as

[2] As discussed further below, the 2011 Wage Rule has not been implemented due to Congressional prohibition contained in riders to DOL's appropriations.

[3] *Accord G.H. Daniels & Assocs.* v. *Solis,* No. 12–cv–1943–CMA (D. Col. Sept. 17, 2012), Doc. 38 (Mot. Hrg. Tr.) at 4 (concurring *with Louisiana Forestry* opinion and rejecting, in the context of an enforcement action under the 2008 H–2B rule, the argument that DOL lacks rulemaking authority).

the agency with expertise on labor market questions, which includes determining the prevailing wages that must be paid to workers in connection with the H–2B program, when adjudicating H–2B petitions.[4] DHS and DOL have determined that the best way for DOL to fill this statutory role as a consultant to DHS is for DOL to provide its advice with respect to whether U.S. workers capable of performing the services or labor are available, and whether the employment of the foreign worker(s) will adversely affect the wages and working conditions of similarly employed U.S. workers. DHS and DOL have further determined that the most effective method for DOL to provide this advice—a key component of which is establishing the prevailing wage methodology—is by setting forth in regulations the standards it will use to advise DHS regarding whether U.S. workers capable of performing the services or labor are unavailable and whether the employment of the H–2B workers will not adversely affect the wages and working conditions of similarly employed U.S. workers. DOL's rules, including this prevailing wage rule, set the standards by which employers demonstrate to DOL that they have tested the labor market and found no or insufficient numbers of U.S. workers, and also set the standards by which employers demonstrate to DOL that the offered employment does not adversely affect US workers. By setting forth this structure in regulations, DHS and DOL will ensure the provision of this advice by DOL is consistent, transparent, and provided in the form that is most useful to DHS.

This interim final rule is necessary because, in the absence of regulations to structure DOL's consultative responsibilities, DOL will be forced to cease processing employers' requests for prevailing wage determinations and temporary labor certifications and thus will be unable to continue to provide the advice that DHS has determined is necessary under section 214(c)(1) of the INA for DHS to fulfill its statutory responsibility under section 101(a)(15)(H)(ii)(b) of the INA to adjudicate H–2B petitions, as implemented in the DHS regulation at 8 CFR 214.2(h)(6). In particular, this will leave DHS incapable of meeting its statutory responsibility to meaningfully consult with DOL, the Government agency DHS has determined is the appropriate agency with the requisite expertise with respect to labor market questions. Without this statutory consultation, USCIS will be unable to adjudicate H–2B petitions, as 214(c)(1) of the INA requires that a petition cannot be adjudicated by DHS ''until after consultation with appropriate agencies of the Government.'' Further, in order to maintain the integrity of the consultative process, and provide DHS with the best possible advice relating to the U.S. labor market concerns required by section 101(a)(15)(H)(ii)(b) of the INA, DOL must have certainty that it can enforce the assurances provided by employers who desire to participate in the H–2B program, such as those relating to the wages and working conditions that must be offered to H–2B workers and U.S. workers recruited in connection with the application for certification.

In order to ensure that there can be no question about the authority for and validity of the DOL's regulations governing the methodology for determining prevailing wages in the H–2B program, DHS and DOL are jointly publishing this regulation, which implements a key component of DHS's determination that it must consult with DOL on the labor market questions relevant to its adjudication of H–2B petitions. This regulation also executes DHS's and DOL's determination that implementation of the consultative relationship may be established through jointly adopted regulations that determine the method by which DOL will provide the necessary advice to DHS. Accordingly, DHS is amending its own regulations at 8 CFR 214.2(h)(6)(iii)(D) to clarify that DOL will establish regulatory procedures for administering elements of the program necessary to provide DHS with the requisite advice with respect to the labor market. This amendment will underscore that the consultative process has occurred and that DHS adopts DOL's prevailing wage methodology as part of the advice required for the administration of temporary labor certifications.

D. The Determination of the Prevailing Wage

To comply with its obligations under the program, an employer must pay the H–2B workers hired in connection with the application a wage that will not adversely affect the wages of U.S. workers similarly employed. DOL's H–2B procedures have always provided that adverse effect is prevented by requiring H–2B employers to offer and pay at least the prevailing wage to the H–2B workers and those U.S. workers recruited in connection with the job opportunity. To facilitate compliance with this requirement, DHS and DOL have set forth a number of specific provisions governing the system by which DOL will determine the prevailing wage for the job opportunity for which temporary labor certification is being sought.

From the outset of the H–2B program, DOL directed that the same prevailing wage procedures be used for the permanent and H–2B labor certification programs and the H–1B labor condition application program. Although DOL did not promulgate a separate prevailing wage methodology until 1995, DOL provided guidance to the States, which provided prevailing wage determinations until 2010, on the administration of the H–2 nonagricultural program (a predecessor of the H–2B program) requiring the States to determine the prevailing wage in accordance with regulations for the permanent program at 20 CFR 656.40.[5] In 1995, DOL issued separate prevailing wage guidance through GAL 4–95, ''Interim Prevailing Wage Policy for Nonagricultural Immigration Programs'' (May 18, 1995), Attachment I,[6] and again in 1998, through GAL 2–98, ''Prevailing Wage Policy for Nonagricultural Immigration Programs'' (November 30, 1998) that continued to extend the provisions of § 656.40 to the H–2B program. Under the two GALs, payment of the rates determined under the Davis-Bacon Act (DBA), 40 U.S.C. 276a *et seq.,* 29 CFR part 1, or the McNamara-O'Hara Service Contract Act (SCA), 41 U.S.C. 351 *et seq.,* was mandatory for H–2B occupations for which such wage determinations existed. Starting in 1998, in the absence of SCA or DBA wage rates, prevailing wage determinations were based on the Occupational Employment Statistics (OES) wage survey, compiled by the Bureau of Labor Statistics (BLS). The OES wage survey produces employment and wage estimates for approximately 800 occupations and is based upon wage data covering full-time and part-time workers who are given monetary compensation for their labor or services. The OES survey is published annually and features data broken out both by geographic area and industry. The wage estimates in the survey are made

[4] DHS (and the former Immigration and Naturalization Service, Department of Justice, which was charged with administration of the H–2B program prior to enactment of the Homeland Security Act of 2002, Public Law 107–296, 116 Stat. 2142) has long recognized that DOL is the appropriate agency with which to consult regarding the availability of U.S. workers and for assuring that wages and working conditions of U.S. workers are not adversely affected by the use of H–2B workers. *See* 55 FR 2606, 2617 (Jan. 26, 1990).

[5] See General Administration Letter (GAL) 10–84, ''Procedures for Temporary Labor Certifications in Non Agricultural Occupations'' (April 23, 1984),

[6] See *http://wdr.doleta.gov/directives.*

available at the national, State and metropolitan and nonmetropolitan area levels. The OES survey directly collects a wage rate for all occupations defined by the Office of Management and Budget's (OMB) occupational classification system, the Standard Occupational Classification (SOC). Employers have also been able to use wages based on private wage surveys that meet Department standards since at least 1995.

Both the 1995 and the 1998 GALs provided that, absent a DBA or SCA rate, DOL would issue prevailing wage determinations at two levels or tiers, an entry-level wage and an experienced wage. At that time, there were not many H–2B program users, and new prevailing wage procedures were designed primarily to address the needs of the permanent and H–1B programs, which were dominated by job opportunities in higher skilled occupations. There was considerable desire on the part of permanent and H–1B program users to have DOL create a multi-tiered wage structure to reflect the widely-held view that workers in occupations that require sophisticated skills and training receive higher wages based on those skills. Since the OES survey captures no information about actual skills or responsibilities of the workers whose wages are being reported, the two-tier wage structure introduced in 1998 was based on the assumption that the mean wage of the lowest paid one-third of the workers surveyed in each occupation could provide a reasonable proxy for the entry-level wage. DOL did not conduct any meaningful economic analysis to test the validity of that assumption and, most significantly, it did not consider whether assumptions about wages and skill levels for higher skilled occupations might be less valid when applied to lower skilled occupations. In December 2004, DOL revised its regulation governing the permanent program. 69 FR 77326, Dec. 27, 2004. These revisions included changes to 20 CFR 656.40, which governed the procedures for determining the prevailing wage. In particular, these revisions eliminated the requirement that SCA/DBA wage determinations be treated as the prevailing wage where such determinations existed. The regulation provided that use of available SCA/DBA wage rates would be only at the option of the employer.

The preamble to the permanent regulation, 69 FR 77326–27, also discusses Congress's enactment of the H–1B Visa Reform Act in the Consolidated Appropriations Act of 2005, Public Law 108–447, Div. J., Title IV, section 423, which amended section 212(p)(4) of the INA, 8 U.S.C. 1182(p)(4), relating to the H–1B visa program. This legislation required DOL to issue prevailing wages at four levels when the prevailing wages were based upon a government survey. The legislation mandated how to calculate the four levels through a mathematical formula that created two additional wage levels in between the existing two level wages. Section 656.40 of 20 CFR, the regulation implementing the H–1B Visa Reform Act, only specifically referenced prevailing wages established for the permanent and H–1B programs.

Soon after the enactment of the new regulations, DOL issued comprehensive guidance on prevailing wage determinations. Following the practice in place since 1984, this guidance also applied to the H–2B program. ETA Prevailing Wage Determination Policy Guidance, Non-agricultural Immigration Programs, May 2005, revised November 2009.[7] The guidance included the use of the four levels and the elimination of the mandatory application of the SCA/DBA wage determinations.

In 2008, DOL issued regulations governing DOL's role in the H–2B temporary worker program. 73 FR 78020, Dec. 19, 2008 (the 2008 rule). The 2008 rule addressed some aspects of the 2005 prevailing wage guidance, and adopted the four-level wages from the prior guidance by requiring wages based on the OES mean to reflect four ''skill levels.'' *See* 20 CFR 655.10(b)(2).[8] As described above, this guidance converted the two-level wages, containing an entry level and experienced wage, into a four-tier system by mathematically adjusting the two tiers in the manner prescribed by Congress in the context of H–1B specialty occupations. The 2008 rule provided that the prevailing wage would be the collective bargaining agreement (CBA) wage rate, if the job opportunity was covered by an agreement negotiated at arms' length between the union and the employer; the OES four-tier wage rate if there was no CBA; a survey if an employer elected to provide an acceptable survey; or a DBA or SCA rate if the employer elected to use those determinations. See 20 CFR 655.10(b). DOL did not seek comments on the use of the four-level wage methodology for determining prevailing wages when promulgating the 2008 rule. 73 FR 78031.

E. CATA v. Solis and the 2011 Wage Rule

In early 2009, a lawsuit was filed challenging various aspects of DOL's H–2B procedures included in the 2008 rule. *Comité de Apoyo a los Trabajadores Agricolas (CATA)* v. *Solis,* Civ. No. 09–cv–240, 2010 WL 3431761 (E.D. Pa. 2010). Among the issues raised in this litigation were the use of the four-level wage structure in the H–2B program and the optional use of SCA and DBA wages. In an August 30, 2010 decision, the court ruled that DOL had violated the Administrative Procedure Act (APA) by failing to adequately explain its reasoning for adopting skill levels as part of the H–2B prevailing wage determination process, and by failing to accept comments relating to the choice of appropriate data sets in deciding to rely on OES data rather than SCA and DBA in setting the prevailing wage rates. The court ordered DOL to ''promulgate new rules concerning the calculation of the prevailing wage rate in the H–2B program that are in compliance with the Administrative Procedure Act no later than 120 days from the date of this order.'' *CATA,* 2010 WL 3431761, at *27.

Following the *CATA* court's 2010 ruling, and following consultation with DHS, DOL engaged in rulemaking to address both substantive and procedural concerns about setting prevailing wages in the H–2B program. DOL published a Notice of Proposed Rulemaking (NPRM) in accordance with the court's order. 75 FR 61578, Oct. 5, 2010. The NPRM proposed to eliminate the use of the four-level wage structure for the H–2B program in favor of the mean OES wage for each occupational category. It also provided that available SCA and DBA wage determination rates for those occupations for which H–2B certification is sought, or collective bargaining agreement wages, if such an agreement exists, would be used if they reflected higher wages than the OES wage. The NPRM also proposed to eliminate the use of employer-provided surveys in the H–2B program.

After a thorough review of the comments, and with input from DHS, DOL promulgated a final rule, with some modifications relating to surveys. 76 FR 3452, Jan. 19, 2011 (the 2011 Wage Rule). DOL determined that ''there are no significant skill-based wage

[7] *http://www.foreignlaborcert.doleta.gov/pdf/NPWHC_Guidance_Revised_11_2009.pdf.*

[8] The invalidated provision from the 2008 rule read: ''If the job opportunity is not covered by a CBA, the prevailing wage for labor certification purposes shall be the arithmetic mean, except as provided in paragraph (b)(4) of this section, of the wages of workers similarly employed *at the skill level* in the area of intended employment. The wage component of the BLS Occupational Employment Statistics Survey (OES) shall be used to determine the arithmetic mean, unless the employer provides a survey acceptable to OFLC under paragraph (f) of this section.'' (emphasis added).

differences in the occupations that predominate in the H–2B program, and to the extent such differences might exist, those differences are not captured by the existing four-tier wage structure.'' *Id.* at 3460. DOL found that in 2010 almost 75 percent of H–2B jobs were certified at a Level 1 wage, which is defined as the mean of the lowest one-third of all reported wages, and over a several year period, approximately 96 percent of the prevailing wages issued were lower than the mean of the OES wage rates for the same occupation. *Id.* at 3463. In the low-skilled occupations in the H–2B program, the mean ''represents the wage that the average employer is willing to pay for unskilled workers to perform that job.'' *Id.* Therefore, DOL concluded that the use of skill levels adversely affected U.S. workers because it ''artificially lowers [wages] to a point that [they] no longer represent[] a market-based wage for that occupation.'' *Id.* The application of the four levels set a wage ''below what the average similarly employed worker is paid.'' *Id.; see also* 75 FR 61577, 61580–81. DOL concluded that ''the net result is an adverse effect on the [U.S.] worker's income.'' 76 FR 3463.

The 2011 Wage Rule permitted the use of employer-submitted surveys only in very limited circumstances, such as where the job opportunity is not covered by a CBA and is not accurately represented within the available wage data under the DBA, SCA, or OES. 76 FR 3467. In those circumstances, the employer could submit a wage survey that would be used if it met the methodological standards that were applicable to employer-submitted surveys in the 2008 rule. *Compare* 20 CFR 655.10(f)(2), (3)(i) and (ii) (2012 ed.) with 20 CFR 655.10(b)(7)(iv), (v)(A) and (B) (2012 ed. Note).

The 2011 Wage Rule required the use of wage determinations based on the DBA and SCA if a job opportunity involved an ''occupation in the area of intended employment * * * for which such a wage has been determined.'' 20 CFR 655.10(b)(2) (2012 ed. Note). Finally, the 2011 Wage Rule concluded that the prevailing wage would be the highest of the wage rates established in the various wage sources—the applicable CBA wage, the arithmetic mean as found in the OES, or the applicable DBA or SCA wage—because that approach would be most consistent with DOL's responsibility to avoid an adverse effect on wages of similarly employed U.S. workers. After two adjustments to the effective date of the 2011 Wage Rule, it was set to become effective on November 30, 2011.[9]

F. Congressional Response to the 2011 Wage Rule

On November 18, 2011, Congress enacted the Consolidated and Further Continuing Appropriations Act, 2012, Public Law 112–55, 125 Stat. 552 (November 2011 Appropriations Act), a spending bill that contained DOL's appropriations. That Act provided that ''[n]one of the funds made available by this or any other Act for fiscal year 2012 may be used to implement, administer, or enforce, prior to January 1, 2012 the [2011 Wage Rule].'' Public Law 112–55, div. B, tit. V, § 546 (Nov. 18, 2011). The conference report accompanying the November 2011 Appropriations Act stated that the purpose of the postponement was to ''allow Congress to address'' the 2011 Wage Rule. H.R. Rep. No. 112–284 (2011) (Conf. Rep.).

Since the enactment of the November 2011 Appropriations Act, each subsequently enacted appropriations act has contained the same prohibition preventing implementation of the 2011 Wage Rule.[10] Because the Department was prohibited from spending funds to implement the 2011 Wage Rule, it was necessary to revert to the 2008 wage provisions for as long as the 2011 Wage Rule was blocked legislatively. The program could not continue to function without a wage rule in effect, and the 2008 rule was the only available option. In order to prevent the nullification of the wage provisions of the 2008 H–2B rule, 20 CFR 655.10, which would have occurred had the 2011 Wage Rule taken effect, DOL has extended the effective date of the 2011 Wage Rule four times.[11] Implementation of the effective date of the 2011 Wage Rule is currently extended to October 1, 2013.

G. Further Activity in CATA v. Solis

As a result of the appropriations riders, DOL continued to rely upon the 2008 rule, including its prevailing wage provisions. On September 27, 2012, the *CATA* plaintiffs filed a motion for preliminary and permanent injunction seeking to prevent DOL from using the four-level wage system in determining H–2B prevailing wages. Memorandum of Law in Support of Plaintiffs' Motion for a Temporary Restraining Order and Preliminary and Permanent Injunctive Relief, *CATA* v. *Solis,* Dkt. 152. Accordingly, they asked the court to vacate the phrase ''at the skill level'' from the prevailing wage formula at 20 CFR 655.10(b)(2). *Id.* at 1. Plaintiffs argued that DOL's continued reliance on the four-level OES wages contravened the court's 2010 holding that the provision was procedurally invalid. *Id. at 1–2.* Plaintiffs further argued that continued reliance on the four-level OES wages was in derogation of DOL's own finding, described in promulgating the 2011 Wage Rule, that the use of the four-level structure created an adverse effect on workers' wages. *Id.*

On March 21, 2013, the *CATA* court issued a permanent injunction against the operation of the skill levels contained in the wage provision, 20 CFR 655.10(b)(2), of the 2008 rule. *CATA* v. *Solis,* __ F.Supp. __, 2013 WL 1163426, *13 (E.D. Pa. 2013) (*CATA II*). The court noted that DOL continued to use the prevailing wage provisions of the 2008 rule, ''nearly thirty (30) months after Judge Pollak invalidated the Rule, and two years after the DOL found that the Rule violates the DOL's statutory and regulatory mandates.'' *Id.* at *5. The court held that DOL has authority to grant labor certifications only if it can assure that they will not adversely affect the wages and working conditions of U.S. workers. *Id.* at *8. Because prevailing wage determinations issued based upon the four-level OES wage rates do result in adverse effect, the labor certifications based on such prevailing wages ''exceed the bounds of DOL's delegated authority.'' *Id.* The court also found that the four-level component of the 2008 rule violated section 706(2)(A) of the APA, because it had consequences that ''plainly contradict congressional policy.'' *Id.* at *10. The court rejected DOL's request to leave the 2008 rule in effect while it promulgated another regulation in order to avoid disruption to the H–2B program, stating that in these circumstances ''to leave an invalid rule in place is for a reviewing court to

[9] DOL originally set the effective date of the Wage Rule for January 1, 2012. However, as a result of the *CATA* litigation and following notice-and-comment rulemaking, DOL issued a final rule, 76 FR 45667, August 1, 2011, revising the effective date of the 2011 Wage Rule to September 30, 2011, and a second final rule, 76 FR 59896, September 28, 2011, further revising the effective date of the 2011 Wage Rule to November 30, 2011.

[10] These include the Consolidated Appropriations Act of 2012, Public Law 112–74, 125 Stat. 786, which was enacted on December 23, 2011; Continuing Appropriations Resolution, 2013, Public Law 112–175, 126 Stat. 1313, which was enacted on September 28, 2012; and Consolidated and Further Continuing Appropriations Act, 2013, Public Law 113–6, 127 Stat. 198, enacted on March 26, 2013, which establishes DOL's appropriations through September 30, 2013.

[11] Because of the prohibition on expenditures to implement the 2011 Wage Rule, its effective date has been extended to January 1, 2012, 76 FR 73508 (Nov. 29, 2011); to October 1, 2012, 76 FR 82115 (Dec. 30, 2011); to March 27, 2013, 77 FR 60040 (Oct. 2, 2012); and to October 1, 2013, 78 FR 19098 (posted on the public Web site of the Office of the Federal Register on March 26, 2013, and appeared in print on March 29, 2013).

legally sanction an agency's disregard of its statutory or regulatory mandate.'' *Id.* at *11. The court further stated that vacating the four-level component of the 2008 rule ''will only disrupt the H–2B program to the extent that the DHS and DOL use the program to issue H–2B visas that they are expressly prohibited from granting.'' *Id.* at *12. Accordingly, the court vacated section 655.10(b)(2), remanded the matter to DOL, and gave DOL 30 days to come into compliance. *Id.* at *13. As a result of the court's order, DOL is currently unable to issue a prevailing wage determination based on the OES survey, which is the basis of more than 95 percent of DOL's H–2B prevailing wage determinations.[12] Therefore, under the court's order, we must now act expeditiously to close the regulatory gap created by the court order and promulgate a regulation that sets prevailing wages in the H–2B program in a manner that does not adversely affect U.S. workers' wages, so that DOL may provide the advice DHS has determined is necessary for it to adjudicate H–2B petitions.

H. The Interim Wage Methodology

The wage methodology in the 2008 rule requires that if a job opportunity is covered by a collective bargaining agreement, the prevailing wage applicable to that job is the wage set in the CBA. 20 CFR 655.10(b)(1). However, if the job opportunity for which a prevailing wage determination is sought is not covered by a CBA, the prevailing wage is determined according to 20 CFR 655.10(b)(2). Under that now-vacated provision, the prevailing wage was the arithmetic mean of the OES wages of workers similarly employed ''at the skill level'' in the area of intended employment. 20 CFR 655.10(b)(2). Other wage provisions of the 2008 rule were not vacated. First, the 2008 rule also permits employers to submit their own wage surveys in lieu of the OES wage, under certain conditions. 20 CFR 655.10(b)(4), (f). In addition, employers are permitted, but not required, to use wage determinations issued by DOL under either the DBA or SCA. 20 CFR 655.10(b)(5).

By contrast, as noted above, the 2011 Wage Rule establishes a regime in which the prevailing wage would be the ''highest of'' either the wage applicable under the CBA, the DBA, the SCA, or the OES mean. 20 CFR 655.10(b)(1)–(3) (2012 ed. Note). The 2011 Wage Rule eliminates from the OES mean the four-level wages, and disallows the use of employer-submitted surveys if the prevailing wage could be determined based on the OES, the DBA, or the SCA. 20 CFR 655.10(b)(3), (6), (7) (2012 ed. Note). In the very limited circumstances in which employer-submitted surveys would be permitted, the 2011 Wage Rule continues DOL's role in reviewing such surveys for methodological soundness. 20 CFR 655.10(b)(7) (2012 ed. Note).

1. Prevailing Wages Based on the OES

In developing the wage methodology for this interim final rule in order to provide the requisite advice to DHS, DOL will not divide the OES wage into four levels because the *CATA* court has concluded, based on DOL's administrative findings, 76 FR 3463, that the four levels substantively violate the INA, and has vacated that aspect of the 2008 rule. *CATA II,* 2013 WL 1163426, at *9–10. The OES wage survey formed the basis of the prevailing wage determination in both the 2008 and 2011 rules. Therefore, in order to avoid creating an adverse effect on U.S. workers, DOL will base prevailing wage determinations on the arithmetic mean wage established in the OES survey, without the four levels. The prevailing wage will no longer be the mean of the particular wage level, but will be the overall mean of all persons in the occupation in question. Accordingly, this interim rule promulgates the regulatory text contained in the 2008 version of 20 CFR 655.10(b)(2), but strikes from that provision the phrase, ''at the skill level.'' Striking this phrase from the 2008 version of 20 CFR 655.10(b)(2) results in the use of the OES mean without the wage tiers. *See* revised 20 CFR 655.10(b)(2) below.

The OES survey is an appropriate basis for issuing H–2B prevailing wages because it is among the largest, most comprehensive, and continuous statistical survey programs of the Federal Government. The OES collects data from more than 1 million establishments, and salary information is available for all occupations in the SOC. Occupational wage data is available at state levels and at metropolitan and nonmetropolitan area levels within a state. For these reasons, the OES is also used in other foreign labor certification programs administered by DOL. *See* 76 FR 3458. DOL has decided to use the OES mean as the appropriate wage level in the H–2B program because almost all H–2B jobs involve unskilled occupations requiring few or no skill differentials (such as landscape laborer, housekeeping cleaner, forestry worker, and amusement park worker). There is no basis, under the existing statutory and regulatory framework, for creating wage levels since there are no skill-based wage differentials in these occupations. *See* 76 FR 3458–60. As DOL concluded in 2011, there was no justification for stratifying wage levels to artificially create wage-based skill levels when in fact there is no great difference in skill levels with which to stratify the job. Moreover, based on publicly available program data, DOL found during notice and comment rulemaking leading up to the 2011 rule that the predominance of Level I wages under the 2008 rule's four-tier regime results in an adverse impact on similarly situated U.S. workers, in violation of the INA. 75 FR 61580; 76 FR 3463. Under these circumstances, DOL cannot continue using the four-tier wage regime without violating the INA and USCIS's regulations. *CATA II,* 2013 WL 1163426, *8. In addition, DOL has the capacity to operationalize the OES mean wage rate at once based on the immediately available data from the Bureau of Labor Statistics, which will allow DOL to issue prevailing wage determinations without delay. This will allow for the smoothest transition with the least disruption and cost to the Department while acting in compliance with the *CATA II* court's vacatur and remand order.

The Departments invite comments on whether the OES mean is the appropriate basis for determining the prevailing wage.

2. Prevailing Wages Based on Collective Bargaining Agreements

Similarly, both the 2008 and 2011 wage rules use the CBA wage as an alternate basis for determining the prevailing wage. DOL has left the CBA provision of the 2008 wage rule, 20 CFR 655.10(b)(1), intact. DOL and DHS invite comment on whether the CBA wage should continue to be used as the prevailing wage in all instances in which there is a CBA wage, or whether the CBA wage should only be required if it is higher than the OES wage.

3. Prevailing Wages Based on the Davis-Bacon Act and the Service Contract Act

As noted above, DOL historically relied on the prevailing wage regulations used for permanent labor certifications, as codified at 20 CFR 656.40, to determine prevailing wages in the H–2B program. In versions of section 656.40(a)(1) that pre-date 2005,

[12] However, if a job opportunity for which a prevailing wage determination is sought is covered by a collective bargaining agreement, or the wage can be set based on the employer's voluntary reliance on the SCA, the DBA, or the submission of an acceptable private wage survey, DOL may issue a prevailing wage determination and comply with the March 21 court order.

wage rates were set at the levels mandated by the DBA and the SCA ''if the job opportunity is in an occupation which is subject to a wage determination'' in the area of intended employment under either statute. In 2008, DOL eliminated the requirement to apply DBA and SCA wages, and allowed employers to request voluntarily a prevailing wage based on those sources. The 2011 Wage Rule reinstated the mandatory use of the DBA and the SCA if they were the highest rate ''for the occupation in the area of intended employment if the job opportunity is in an occupation for which such a wage rate has been determined.'' 20 CFR 655.10(b)(2) (2012 ed. Note).

For purposes of this interim rule, DOL has decided to continue the 2008 rule's approach, which permits, but does not require, an employer to use a prevailing wage determination based on the DBA or SCA. However, nothing precludes an employer from paying a higher DBA or SCA wage should they choose to do so. In addition, any employer employing H–2B and corresponding workers on particular contracts subject to the DBA or the SCA must comply with the wage provisions under DBA or SCA.

The mandate to prevent adverse effect has existed for many years in the immigration programs administered by DOL and, except for certain unique requirements of the H–2A program, has always been implemented by a requirement that employers offer and pay the prevailing wage, however defined or calculated. The three prevailing wage rates used in this interim final rule (OES mean, SCA and DBA) all are determined by DOL, albeit using different methodologies and samples. Nevertheless, these three rates are based on actual wages being paid to workers in the particular area for the same kind of work for which H–2B workers are sought. Therefore, although there are various ways to define or calculate the prevailing wage rate, DOL and DHS conclude that, under the present circumstances in which we must act expeditiously in response to the *CATA II* order, the use of any of these three wage rates will serve to meet DOL's obligation to determine whether U.S. workers are available for the position and that the employment of H–2B workers will not adversely affect U.S. workers similarly employed. Adopting this standard from the 2008 rule with respect to the SCA and the DBA wages will allow for more efficient and consistent prevailing wage determinations that are in compliance with the INA and USCIS's regulations. It will allow DOL to begin to issue wage determinations upon publication of this interim rule, and begin to eliminate as quickly as possible the backlog of prevailing wage determination requests that has built up since the *CATA II* order. Approaches other than the voluntary application of the DBA and SCA wage rates (such as the ''higher of'' standard used in the 2011 Wage Rule) would require DOL to determine whether multiple wage rates exist for every application and would significantly impede DOL's ability to issue new prevailing wages to those employers in the backlog as well as to employers who previously received the now-invalidated prevailing wages. Any delay in issuing new prevailing wage rates would work to the detriment of employees working under the now-invalidated rates because it would extend the time period during which they would be paid under those invalid rates. Additionally, it would prolong the depressive effect on the wages of similarly-employed U.S. workers, which was the ground for vacatur in the CATA II order.

DOL and DHS seek comment on the use of the DBA and the SCA in making prevailing wage determinations, and if these wage rates should apply, to what extent. DBA and SCA wage determinations, when they exist for the occupation for which certification is being sought and in the area of intended employment, could be used in the H–2B program in at least three possible ways:

a. They will apply if they represent the highest available prevailing wage determination for the job opportunity in question. This is the approach used in the 2011 rule.

b. They are available to the employer if it chooses to rely on them for that job opportunity, regardless whether the wage is the highest or lowest available. This is the approach used in the 2008 rule and in this interim final rule.

c. They constitute the only prevailing wage determination applicable to that job opportunity unless there is a CBA wage. This is the approach that was followed before 2005.

DOL and DHS invite comments on these and other alternatives that may be considered, especially the reasons for or against the use of a particular option. Comments on use of the SCA and/or the DBA in setting prevailing wages will be thoroughly considered, and the Departments will explain fully the policy adopted on these issues following comment.

4. Prevailing Wages Based on Employer-Submitted Surveys

DOL's 2008 rule permits employers to submit independent wage surveys under certain guidelines, and provides for an appeal process in the event of a dispute. Under the 2008 regulation, if an employer submits a survey, it must ''provide specific information about the survey methodology, including such items as sample size and source, sample selection procedures, and survey job descriptions, to allow'' DOL to determine the adequacy of the data provided and validity of the statistical methodology used in conducting the survey. 20 CFR 655.10(f)(2). DOL has issued guidance that sets out the standards by which it will determine the adequacy and validity of the survey methodology.[13] In addition, the survey must be based upon recently collected data, *i.e.*, generally within 24 months of the date of submission. 20 CFR 655.10(f)(3)(ii).

In the 2011 rule, DOL concluded that, given the quality, reliability and consistency of the three public surveys that would be used to make prevailing wage determinations—the OES, the DBA and the SCA—we would allow the submission of other surveys by employers as the basis for a prevailing wage determination only in limited circumstances. Those circumstances include specific situations in which the public surveys may not provide useful wage information about, for instance, geographic locations that are not included in BLS's data collection area (such as the Commonwealth of the Northern Mariana Islands), where the job opportunity is not accurately represented within the job classification used in the OES, DBA or SCA surveys, or where the job opportunity is not accurately represented within the Standard Occupational Classification System published by the BLS. In virtually all other cases, the prevailing wage determination would be made based on the OES, the DBA or the SCA wages. However, if circumstances permitted the use of an employer-submitted survey as the basis for a prevailing wage determination, the 2011 regulation required the same ''fresh'' data standards as did the 2008 rule, and also required that DOL review the survey methodology in the same manner as the 2008 rule. 20 CFR 655.10(b)(7) (2012 ed. Note).

This interim final rule will permit the use of employer-provided surveys in lieu of wages derived from the other sources, in order for DOL to provide the advice DHS has determined is necessary for it to adjudicate H–2B petitions. Accordingly, we do not revise or amend

[13] See *http://www.foreignlaborcert.doleta.gov/pdf/NPWHC_Guidance_Revised_11_2009.pdf* at 14–16.

in this interim rule 20 CFR 655.10(b)(4) and (f) of the 2008 rule. However, DOL still has the concerns expressed in the 2011 rule about the consistency, reliability and validity of these surveys, as well as the costs and delays involved in DOL's review of surveys. 76 FR 3465–67. The Department would like to collect additional data on the accuracy and reliability of private surveys covering traditional H–2B occupations to allow for further factual findings on the sufficiency of private surveys for setting prevailing wage rates. Therefore, DOL and DHS invite comment on whether to permit the continued use of employer-submitted surveys, and especially seek input on the ways in which, if permitted, the validity and reliability of employer-submitted surveys can be strengthened. Are there methodological standards that can or should be included in the regulation that would ensure consistency, validity and reliability of employer-provided surveys? Are there industries in which employers historically and routinely rely on employer-submitted surveys that should be permitted to do so because of the well-developed, historical, industry-wide practice, or for other reasons? Are there state-developed wage surveys, such as state agricultural surveys, or surveys from other agencies, such as maritime agencies, that could provide data that would be useful in setting prevailing wages? Should employer surveys that include data based on wages paid to H–2B or other nonimmigrant workers be permitted in establishing a prevailing wage that does not adversely affect U.S. workers? If so, under what circumstances? *See* 655.10(b)(7)(vi) (2012 ed. Note).

I. The Interim Final Rule is Effective Immediately

The *CATA II* court order vacating 20 CFR 655.10(b)(2) in the 2008 rule prevents DOL from issuing any prevailing wage determinations based on the four-tiered version of the OES survey. Because prevailing wage determinations are a condition precedent to an employer's filing an application for temporary labor certification, which is the means by which DOL provides the advice that DHS has determined is necessary, and there is no prior regulation that DOL can use to issue prevailing wage determinations based on the OES, DOL has suspended issuance of prevailing wage determinations and certification of the vast majority of those applications (those which had not requested a determination based on a CBA, the DBA, the SCA, or an employer-provided survey) until this interim wage methodology becomes effective. Due to the suspension of most wage determinations created by the *CATA II* court order, and because DOL has only 30 days to comply with the court's order, this interim rule is effective immediately. In response to the vacatur of the existing wage rule and in order to come into compliance quickly, this rule applies to all requests for prevailing wage determinations and applications for temporary labor certification in the H–2B program issued on or after the effective date of this interim rule. Upon individual notification to the employer of a new prevailing wage, the new wage methodology will also apply to all previously granted H–2B temporary labor certifications for any work performed on or after the effective date of this interim rule. In addition to the requirements that follow directly from the *CATA II* court's vacatur, the employer's obligation to pay the wage under the interim rule is reflected in Appendix B.1 to the ETA Form 9142, H–2B Application for Temporary Employment Certification, in which employers have certified as a condition of employment under the H–2B program that they will offer and pay ''the most recent prevailing wage * * * issued by the Department to the employer for the time period the work is performed[.]'' 76 FR 21039.

Further, on April 1, 2013, the U.S. Court of Appeals for the Eleventh Circuit upheld a district court decision that granted a preliminary injunction against enforcement of DOL's 2012 H–2B comprehensive rule on the ground that the plaintiffs (employers) are likely to prevail on their allegation that DOL lacks H–2B rulemaking authority. *Bayou Lawn & Landscape Servs.* v. *Sec'y of Labor,* ___ F.3d ___, 2013 WL 1286129, No. 12–12462 (11th Cir. Apr. 1, 2013). DOL and DHS strongly disagree with the Eleventh Circuit's decision and are defending on appeal to the U.S. Court of Appeals for the Third Circuit the district court's decision in *Louisiana Forestry Ass'n* v. *Solis,* 889 F. Supp. 2d 711 (E.D. Pa. 2012), which came to the conclusion that DOL does have independent H–2B rulemaking authority. Nevertheless, DHS and DOL have concluded it is necessary to dispel any questions about the validity of the H–2B program or how it operates. As explained above, DHS has determined that, to exercise its statutory responsibilities to administer the H–2B program, it requires advice from DOL regarding the labor market, and DOL is unable to provide a key component that underlies this advice, namely the prevailing wage determination, without being assured a valid rule is in place. Therefore, based upon the Eleventh Circuit's affirmance of the preliminary injunction against the implementation of the 2012 rule, DOL and DHS are making effective immediately this interim final rule and revising DHS's regulations to resolve any doubt about the consultative role DOL plays in in the H–2B program with respect to prevailing wage determinations. However, this wage methodology is established on an interim basis while the public submits comments on the methodology, and DOL and DHS will promulgate a final rule following thorough consideration of the comments received. DOL and DHS will act as quickly as possible in reviewing comments and in promulgating a final wage methodology regulation in light of those comments.

The Administrative Procedure Act (APA) authorizes agencies to make a rule effective immediately without public participation upon a showing of good cause. 5 U.S.C. 553(b)(B),(d)(3). The APA's good cause exception to public participation and a delayed effective date applies upon a finding that those procedures are ''impracticable, unnecessary, or contrary to the public interest.'' 5 U.S.C. 553(b)(B). Under the APA, '''(i)mpracticable' means a situation in which the due and required execution of the agency functions would be unavoidably prevented by its undertaking public rule-making proceedings.'' S. Rep. No.752, 79th Cong., 1st Sess. 200 (1945). The '''[p]ublic interest' supplements * * * 'impracticable' [and] requires that public rule-making procedures shall not prevent an agency from operating.'' *Id.*

In this case, DOL and DHS consider that it is impracticable to adopt a new prevailing wage methodology, which is the first step in DOL's consultative role in assessing employers' requests for temporary labor certifications, only after the consideration of public comments and the passage of 30 days following the publication of a final rule, as normally required by the APA (and after 60 days, pursuant to the Congressional Review Act's provision for major rules). 5 U.S.C. 553(b), (d); 5 U.S.C. 801. DHS and DOL must act under an extremely short deadline, outside the control of either agency, to come into compliance with the *CATA II* court's vacatur order. Neither DHS nor DOL may use the vacated 2008 prevailing wage rule, which effectively leaves the Departments without a wage regime by which they may operate a congressionally created program. DOL and DHS must take action within 30 days to come into compliance with the

CATA II court order, and also must establish as quickly as possible a wage methodology so that DOL may fully resume providing advice that DHS requires by issuing prevailing wage determinations, which is a condition precedent to an employer's application for temporary labor certification. If this interim wage methodology did not become effective until after the submission and consideration of comments and after a 30-day period following the publication of a final rule, DOL's H–2B certifications and DHS's H–2B petition adjudications would be suspended for that period of time, likely several months. Under such a scenario, the H–2B program could not operate, which would have the dual effects of depriving employers of H–2B workers and depriving workers, both U.S and foreign, of job opportunities with legally sustainable wages.

Moreover, under the *CATA II* court's order, and DOL's own factual findings, the U.S. workers and H–2B workers currently employed under approved certifications, based on the invalid wage rates under the 2008 rule, are being underpaid in violation of the INA. *CATA II,* 2013 WL 1163426, *11–12; 76 FR 3463. To come into compliance with the court's order and to ensure that DHS and DOL fulfill the statutory mandate to protect the domestic labor market, DHS and DOL must immediately set new and legally valid prevailing wage rate standards to allow for an immediate adjustment of the wage rates for these currently employed workers. Further delay in setting a legally valid prevailing wage regime will cause continued harm to U.S. workers, foreign workers, and the domestic labor market.

In addition, the Departments must forego full notice and comment rulemaking to provide immediate regulatory guidance for the operation of the H–2B program, which will avoid continued confusion and disruption to sectors of the economy that may need to supplement their workforce with H–2B workers. The ongoing suspension of the H–2B program beyond the period it has taken DOL and DHS to issue this interim rule would create a significant impact on the H–2B program. For instance, as of late March (shortly after the *CATA II* court order), DOL had in process approximately 287 applications for H–2B prevailing wage determinations. Over the next month, DOL anticipates receiving requests for an additional 265 H–2B prevailing wage determinations. As shown below in Table 1, based on present and historical filing trends, we anticipate receiving an estimated additional 3,023 H–2B prevailing wage requests over the next six months, the amount of time it would likely take to fully implement the APA procedures related to public participation and a 30-day delay in the effective date.[14]

TABLE 1—SIX-MONTH FORECAST OF H–2B PREVAILING WAGE APPLICATIONS

Month	Month by month forecast
March–April	265
May	456
June	355
July	377
August	675
September	1,160
Total	3,023

Therefore, the suspension of processing OES-based prevailing wage determinations for this period of time will create a significant backlog for DOL's National Prevailing Wage Center. Without this fundamental advice from DOL, DHS will be unable to adjudicate H–2B petitions, which will significantly hinder employers' ability to use the program to meet temporary labor shortages and will deprive workers of job opportunities during that suspension.

A months-long program suspension would also significantly delay the issuance of temporary labor certifications, which, under the Departments' consultative framework, are a predicate to H–2B petitions adjudicated by USCIS. The INA limits the number of H–2B visas to 66,000 visas per year, one half of which, or 33,000, can be allocated during the first six months of each fiscal year, and the remainder of which may be allocated during the second half of each fiscal year. For applications for temporary labor certification filed in October 2013, recruitment of U.S. workers would typically begin as early as June 1, 2013. Requests for prevailing wage determinations are generally made between 30 and 60 days in advance of when prevailing wage determinations are needed, *i.e.,* by April or May of 2013. Because an extended suspension of H–2B prevailing wage determinations will prevent the required recruitment of U.S. workers before filing a temporary labor certification application, and H–2B petitions cannot be filed with USCIS without an approved temporary labor certification application, the process will be backlogged significantly, and employers will forego workers necessary to conduct business and workers will forfeit job opportunities. Moreover, if DOL took months to implement a new wage methodology after notice and comment, upon resuming the issuance of prevailing wages, there would be a large backlog and unusually longer wait times that would have an adverse impact on employers' ability to file timely petitions for H–2B workers and for DHS to timely adjudicate those petitions. As of April 10, 2013, there are approximately 682 H–2B petitions, consisting of around 10,117 beneficiaries, on hold at DHS.[15]

Finally, DHS and DOL note that the regulated public already had a significant opportunity to comment on the substantive prevailing wage regime that DHS and DOL are adopting through this interim final rule. DOL already accepted public comments on the proposed use of the mean OES wage rates for the H–2B program. 75 FR 61580–87. DOL subsequently considered and responded to public comments on this issue. 76 FR 3458–67. In addition to the reasons stated above, the Departments find good cause to implement the prevailing wage standards in this interim final rule immediately on a temporary basis because the regulated public is familiar with the prevailing wage regime adopted in this rule. The Departments do not contend that public comments will not be helpful; rather, under the particular circumstances and history of this program, the emergency situation created by the *CATA II* court's order justifies an immediate effectiveness of a prevailing wage standard of which the regulated public is well aware. The Departments still request and will accept and consider additional public comments on all of the prevailing wage issues addressed in this interim final rule.

For these good and sufficient reasons, DOL and DHS have determined that there is good cause to dispense with the APA's notice and public comment and 30-day effective date requirements.

II. Regulatory Procedures

A. Executive Order 12866

Under Executive Order (E.O.) 12866, DOL and DHS must determine whether a regulatory action is economically significant and therefore subject to the requirements of the E.O. and to review

[14] This forecast estimate of incoming H–2B prevailing wage requests includes the 4.4 percent decrease in H–2B prevailing wage requests submitted so far in this fiscal year (FY 2013) as compared the number of H–2B prevailing wage requests submitted during the same time period last fiscal year (FY 2012).

[15] This figure does not include any Form I–129 H–2B petitions filed at DHS from Guam.

by OMB. Section 3(f) of the E.O. defines an economically significant regulatory action as an action that is likely to result in a rule that: (1) Has an annual effect on the economy of $100 million or more, or adversely and materially affects a sector of the economy, productivity, competition, jobs, the environment, public health or safety, or State, local or tribal governments or communities (also referred to as economically significant); (2) creates serious inconsistency or otherwise interferes with an action taken or planned by another agency; (3) materially alters the budgetary impacts of entitlement grants, user fees, or loan programs, or the rights and obligations of recipients thereof; or (4) raises novel legal or policy issues arising out of legal mandates, the President's priorities, or the principles set forth in the E.O.

IV. Administrative Information

A. Executive Orders 12866 and 13563

Under Executive Order (E.O.) 12866 and E.O. 13563, the Departments must determine whether a regulatory action is significant and therefore subject to the requirements of the E.O. and to review by OMB. Section 3(f) of the E.O. defines a significant regulatory action as an action that is likely to result in a rule that: (1) Has an annual effect on the economy of $100 million or more, or adversely and materially affects a sector of the economy, productivity, competition, jobs, the environment, public health or safety, or State, local or tribal governments or communities (also referred to as economically significant); (2) creates serious inconsistency or otherwise interferes with an action taken or planned by another agency; (3) materially alters the budgetary impacts of entitlement grants, user fees, or loan programs, or the rights and obligations of recipients thereof; or (4) raises novel legal or policy issues arising out of legal mandates, the President's priorities, or the principles set forth in the E.O.

The Departments have determined that this interim final rule is an economically significant regulatory action under section 3(f)(1) of E.O. 12866. In response to the court's March 22, 2013 order in *CATA* II, which vacated the prevailing wage methodology in 8 CFR 655.10(b)(2) because of its depressive effect on wages, the Department of Labor has been unable to provide prevailing wage determinations calculated according to four skill levels based on the OES mean wage. The Department has, however, continued to provide prevailing wage determinations based on those portions of section 655.10(b) that the court did not vacate, i.e., those determinations based on the applicable collective bargaining wage or those determinations in which the employer has requested a wage based on an applicable Service Contract Act wage, Davis Bacon Act wage, or an appropriate private wage survey. No more than approximately five percent of all prevailing wage requests are based on these wages. The revision to section 655.10(b)(2) will bring the Department into compliance with the court's order by establishing a prevailing wage based on the OES mean without four tiers, thereby eliminating any depressive effect on wages. This will allow the Department to resume issuing prevailing wages to all employers requesting them. In order to evaluate the economic impact of this interim final rule, it is necessary to project what would happen in the future if the rule is not adopted and to compare this to what is expected to happen in the future if the rule is adopted. In this case, the Department is unable to project what would happen to wage and visa requests under the program since the majority of wage requests have been made based on the four-tiered wage methodology, which is no longer available. The Department has been unable to estimate the economic effects of the rule, but has determined that due to the change in the prevailing wage provisions, this interim final rule is likely an economically significant regulatory action under section 3(f)(1) of E.O. 12866, because without the rule H–2B applications might fall precipitously. The analysis below is not an estimate of the effect of the rule, but instead quantifies the economic significance of the interim final rule's change in the prevailing wage provisions when compared to the wage provisions under the previous wage rule.

The Departments' economic analysis under this section is limited to meeting the requirements under Executive Orders 12866 and 13563. The Departments did not use the economic analysis under this section as a factor or basis for determining the scope or extent of the Departments' obligations under the Immigration and Nationality Act, as amended.

Need for Regulation

The Departments have determined that a new wage methodology is necessary for the H–2B program, based on the recent court decision in *CATA* v. *Solis* vacating section 655.10(b)(2) of the 2008 rule because it did not adequately ensure that U.S. workers were not adversely affected by the employment of H–2B workers and the 2008 rule had not been properly promulgated under the APA. The Departments are issuing the interim final rule pursuant to the court's order requiring the Department of Labor to come into compliance with its ruling within 30 days.

According to the distribution of the 59,694 H–2B prevailing wage determinations the Department of Labor issued based on the Occupational Employment Statistics (OES) wage survey in FY 2011 and 2012,[16] 72.3 percent of H–2B prevailing wage determinations based on the OES were at Level I. The percentages of H–2B prevailing wage determinations based on the OES at Levels II, III, and IV were 14.4, 5.9, and 7.4, respectively. In over 90 percent of those cases, the H–2B prevailing wage was determined at the wage rate lower than the mean of the OES wage rates for the same occupation.

As the Department of Labor found in its 2011 Final Wage Rule, 76 FR 3452, 3458–63 (Jan. 19, 2011), and as the *CATA* court concurred, this distribution of wage rates does not adequately protect U.S. workers from adverse effect. Therefore, as explained in the preamble to this interim rule, because the OES mean wage rate conforms more closely to the wages actually paid by employers in the area for the occupation, the Departments have decided to use the OES mean when the certified prevailing wage is based on the OES survey. Using the arithmetic mean is one way to ensure that H–2B workers are paid a wage that will not adversely affect the wages of similarly employed U.S. workers.

2. Economic Analysis

The Departments' analysis below compares the expected impacts of this interim final rule to the baseline (i.e., the 2008 rule). According to the principles contained in OMB Circular A–4, the baseline for this rule would be the situation that exists if this interim final rule is not adopted. Thus, the baseline for this H–2B prevailing wage regulation is the four-tier wage structure derived from the OES wage survey, as implemented in the 2008 rule. The 2008 rule also permits the use of certain employer-submitted surveys, the DBA, or the SCA wages as the basis for a prevailing wage determination. The 2008 rule also requires the use of the CBA wage rate when a CBA exists that was negotiated at arms' length.

[16] In FY 2011 and 2012, a total of 72,037 prevailing wage determinations were issued by the Department of Labor's National Prevailing Wage Center (NPWC) for employers seeking wage rates for H–2B workers. Of the 72,037, 59,694 determinations (82.9%) were based on the OES and 12,343 determinations were based on a collective bargaining agreement (CBA), the Davis-Bacon Act (DBA), or the Service Contract Act (SCA) prevailing wage, or employer-submitted wage surveys.

This interim final rule establishes that when the prevailing wage determination is based on the OES, the wage rate is the arithmetic mean of the OES wages for a given area of employment and occupation. The median does not represent the most predominant wage across a distribution. The median wage represents only the midpoint of the range of wage values; it does not account for the actual average. The mean is widely considered to be the best measure of central tendency for a normally distributed sample, as it is the measure that includes all the values in the data set for its calculation, and any change in any of the wage rates will affect the value of the mean. The Department has traditionally relied on arithmetic means for wage programs and has determined that these reasons make continuing reliance on the mean, rather than the median, logical. This interim final rule eliminates the four-tier wage structure of the 2008 final rule. For the purposes of this interim final rule, the Departments have decided to retain the component of the 2008 final rule that permits, but does not require, an employer to use a prevailing wage determination based on employer-provided alternatives from legitimate sources such as employer-submitted surveys, DBA, or SCA wage determinations. It also retains the component of the 2008 final rule that requires the use of an applicable CBA wage rate, if one exists. Finally, this interim final rule retains the requirement that employers offer H–2B workers and U.S. workers hired in response to the required H–2B recruitment a wage that is at least equal to the highest of the prevailing wage, or the Federal, State or local minimum wage.

The change in the method of determining prevailing wages under this interim final rule will result in additional compensation for both H–2B workers and U.S. workers hired in response to the required recruitment. In this section, the Departments discuss the relevant costs, transfers, and benefits that may apply to this interim final rule.

The Departments calculated the change in hourly wages that would result from the interim final rule by comparing the prevailing wage rates to the H–2B hourly wages actually certified by standard occupational classification (SOC) code and county of employment, using a randomly selected sample of 512 certified or partially certified H–2B applications from FY 2012. Under this interim final rule, the Departments will base prevailing wage determinations on the OES mean wage, the SCA or DBA wage, the CBA wage, or wage based on an employer-submitted survey.

Using certified and partially certified applications from the random sample, we calculated the increase in wages as the difference between the prevailing wages and the H–2B hourly wages actually certified in FY 2012.[17] We weighted this differential by the number of certified workers on each certified or partially certified application.[18] We then summed those products to calculate the weighted average wage differential for the randomly selected sample drawn from FY 2012 H–2B program data.

The equation below shows the formula that we used to calculate the weighted average wage differential (WWD). In the formula, ''*Prevailing Wage*'' is the arithmetic mean of the OES-reported wage, the SCA or DBA wage, whichever is lowest.

$$\mathrm{WWD} = \sum_{i=1}^{512}\left(\text{Prevailing Wage}_i - \text{Certified H-2B Wage}_i\right) \times \left(\frac{\text{Number of Certified Workers on Each Application}_i}{\text{Total Certified Workers in the Sample}}\right)$$

In order to accurately calculate the expected changes in hourly wages relative to the baseline, the Departments used wage data for each county where the H–2B work was expected to be performed. The Department of Labor's program database does not contain all work locations for the H–2B certifications; further, the employer's address frequently does not represent the area where the work actually takes place. Consequently, the Departments used a stratified random sample of 512 certified or partially-certified applications from FY 2012 H–2B program data[19] and conducted a manual extraction of area-of-employment data from these certified H–2B applications, including the city, county, state, and zip code corresponding to the area of employment.

Using this sample data, we estimated that this interim final rule's change in the method of determining wages will result in, at most, a $2.12 increase[20] in the weighted average hourly wage for H–2B workers and similarly employed U.S. workers hired in response to the recruitment required as part of the H–2B application.

The Departments provide an assessment of transfer payments associated with increases in wages resulting from the change in the wage determination method. Transfer payments, as defined by OMB Circular A–4, are payments from one group to another that do not affect total resources available to society. Transfer payments are associated with a distributional effect but do not result in additional benefits or costs to society. The primary recipients of transfer payments reflected in this analysis are H–2B workers and U.S. workers hired in response to the required recruitment under the H–2B program. The primary payers of transfer payments reflected in this analysis are H–2B employers. Under the higher wage obligation established in this interim final rule, those employers who

[17] Depending on the scope of work required by H–2B workers, multiple prevailing wage determinations may be needed if the work will be performed in multiple locations for a certified or partially-certified application (such as those involving carnival or reforestation workers). While the Department of Labor's program database collects the total number of H–2B workers certified for each certified or partially-certified application, the Department of Labor has limited information about H–2B workers certified on the same application who were paid different prevailing wages because they performed work in multiple locations. In this analysis for the certified and partially-certified applications with multiple prevailing wage rates, we used prevailing wage rates that occurred most frequently in each application for certification.

[18] The Departments weighted the wage differentials by the number of certified workers as opposed to the number of workers requested because a decrease in number of workers granted may occur for reasons other than that a U.S. worker was hired in response to the recruitment.

[19] The stratified random sample chosen was consistent with standard statistical methods.

[20] This is an upper bound estimate because, due to the lack of data on employer surveys in our sample, we were not able to fully calculate the increase in the weighted average hourly wage. Our estimate of the increase in the weighted average hourly wage at $2.12 was calculated as the difference between the OES mean wage (or the SCA or DBA wage, whichever is lower) and the wage actually certified. However, we assume that employers would choose an available survey wage where it is lower than the OES mean wage and the SCA and/or DBA wage. Therefore, our estimated weighted average hourly wage increase is likely an overestimate. We also did not have data on CBA rates. However, if an employer has a higher CBA rate, this interim final rule will not result in a transfer payment because the employer already would be legally bound to pay the CBA wage.

participate in the H–2B program are likely to be those that have the greatest need to access the H–2B program.

The H–2B program is capped at 66,000 visas issued per year but H–2B workers with existing visas may remain in the country for two additional years if an H–2B employer petitions for them to remain. Assuming, as the Department of Labor did in its 2011 Final Wage Rule, that half of all such workers (33,000) in any year stay at least one additional year, and half of those workers (16,500) stay a third year, there will be a total of 115,500 H–2B workers in a given year. That is, in our calculations, we used 66,000 as the annual number of new entrants and 115,500 as the total number of H–2B workers in a given year.

In the remaining sections of this analysis, we first present the estimated costs resulting from the interim final rule, including an increase in H–2B employer expenses that could lead to a decrease in production. The Departments predict that most of these costs, which would result from a decrease in current H–2B participation by employers who cannot afford the increased labor costs, or who can more easily fill empty positions with U.S. workers, will be borne by the additional employers who have the need for additional temporary labor but do not currently participate in the H–2B program. We then discuss the transfers from H–2B workers to U.S. workers and from employers to U.S. and H–2B workers resulting from the change in wage determination methodology.

i. Costs

In standard economic models of labor supply and demand, an increase in the wage rate represents an increase in production costs to employers, which leads to a reduction in the demand for labor. Because production costs increase with an increase in the wage rate, a resulting decrease in profits is possible for H–2B employers that are unable to increase prices to cover the labor cost increase. Some H–2B employers, however, can be expected to offset the cost increase by increasing the price of their products or services.[21] In addition, workers who would have been hired at a lower wage rate may not be hired at the higher wage rate, resulting in forgone earnings for H–2B and U.S. workers. In this sense, to the extent that the higher wages imposed by the rule result in lower employment and lower output by firms that had employed those workers, the lost profits on the foregone output and the lost net wages to the foregone workers represent a deadweight loss. In economics, a deadweight loss is a loss of economic efficiency that can occur when equilibrium for a good or service is not optimal. This effect will be magnified during years in which the H–2B visa cap is not reached.[22]

The Department of Labor certified employers for 79,305 H–2B positions on average for both FY 2011 and 2012. This number reflects the number of positions certified, rather than the number of actual workers who entered the program to fill those positions because, as previously stated, the H–2B program is capped at 66,000 visas per year. Using this number of certified positions to represent the quantity of labor demanded, and assuming an elasticity of labor demand of -0.3,[23] a $2.12 (21.4 percent) increase in the average H–2B prevailing wage rate would result in a 6.4 percent decline in the number of H–2B positions requested by employers, for a remaining total of 74,229 H–2B certified positions,[24] which is still larger than the maximum number of visas allowed under the H–2B program. Therefore, any loss of production resulting from some employers dropping out of the program will be offset by the increase in production by other employers who would then be able to fill previously vacant positions.

Thus, the Departments believe that for years in which the number of certified positions exceeds the number of positions available under the annual cap, there will be no deadweight loss in the market for H–2B workers even if some employers do not participate in the program as a result of the higher H–2B wages. Indeed, the higher wages expected to result from the interim final rule could in turn result in a more efficient distribution of H–2B visas to employers who can less easily attract available U.S. workers. The Departments believe that, under this interim final rule, those employers who can more easily attract U.S. workers will be dissuaded from attempting to participate in the H–2B program, so that those employers participating in the H–2B program after the rule is in place will be those that have a greater need for the program, on average, than those employers not participating in the H–2B program. Therefore, there would be no appreciable decline in the total employment under the program.

ii. Transfers

The change in the method of determining the prevailing wage rate results in transfers from H–2B workers to U.S. workers and from U.S. employers to both U.S. workers and H–2B workers. A transfer from H–2B workers to U.S. workers arises because, as wages increase, jobs that would otherwise be occupied by H–2B workers will be more acceptable to a larger number of U.S. workers who will apply for the jobs. Additionally, faced with higher H–2B wages, some employers may find domestic workers relatively less expensive and may choose not to participate in the H–2B program and, instead, employ U.S. workers. Although some of these U.S. workers may be drawn from other employment, some of them may otherwise be or remain unemployed or out of the labor force entirely, earning no compensation.

The Departments are not able to quantify these transfers with precision. Difficulty in calculating these transfers arises primarily from uncertainty about the number of U.S. workers currently collecting unemployment insurance benefits who would become employed as a result of this rule.

To estimate the total transfer to all H–2B workers that results from the increase in wages due to application of the interim final rule's new prevailing wage determination method, the Departments multiplied the weighted average wage differential ($2.12) by the total number of H–2B workers in the United States in a given year (115,500).[25] We estimated the total impact incurred due to the increase in wages at $371.82 million per year. For the number of hours worked per day, we used 7 hours as typical. For the number of days worked, we assumed that the employer would retain the H–2B worker for the maximum time allowed (10 months or 304 days) and would employ the workers for 5 days per week. Thus,

[21] Although employers may pass costs onto their customers, data does not exist from which to estimate the amount or extent to which costs would be absorbed by customers. Therefore, the Departments are not able to quantify this cost offset.

[22] The output reduction impact of reducing labor demand may be in some cases partially offset by capital substitution and organizational substitution productivity effects. When substitution occurs, the deadweight loss is reduced.

[23] Hamermesh estimated that the elasticity of labor demand ranged from –0.21 to –0.45 by industry with an average of about –0.30 (Hamermesh Daniel S., Labor Demand, Princeton and Chichester, U.K.: Princeton University Press, 1993). Although this is a 20-year old study, it has been cited recently by Leif Danzier (2007) and Pedro Trivin (2012). We did not use these more recent studies of elasticity of labor demand because they are limited to the manufacturing sector or low-wage workers.

[24] 79,305—(79,305 − 6.4%) = 74,229.

[25] The Department's data on certified applications cannot be used to determine the actual number of H–2B workers in the country. Certifications are made without regard to the cap on the number of H–2B workers admissible each year and are not intended to indicate whether a worker actually entered the country to fill a position.

the total number of days worked equals 217 (304 × 5/7). The following equation shows the formula used to compute the total impact per year, which likely will be lower due to the use of other lower wage rates:

$$\begin{aligned}&\$371.82 \text{ million (Total Impact per year)}\\&= \$2.12 \text{ (Weighted Average Wage Differential)} \times 7 \text{ (Working hours per day)}\\&\times 217 \text{ (Total number of days worked)}\\&\times 115{,}500 \text{ (The Total Number of H} - \text{2B Workers)}\end{aligned}$$

The increase in the prevailing wage rates induces a transfer from participating employers not only to H–2B workers, but also to U.S. workers hired in response to the required H–2B recruitment. The higher wages are beneficial to U.S. workers because they enhance workers' ability to meet the cost of living and to spend money in their local communities, which has the secondary impact of increasing economic activity and, therefore, generates employment in the community. An additional transfer is increased remittances to the H–2B worker's home country. The Departments, however, do not have data on the remittances made by H–2B workers to their countries of origin. Our calculations also do not include the wage increase for U.S. workers hired in response to the required recruitment because of the lack of data on these workers. The annual transfer of this interim final rule was calculated based on the stratified random sample of 512 certified or partially-certified applications from FY 2012 H–2B program data, which are the most recent data available. Because we are assuming no statutory increases in the number of H–2B visas available for entry in a given year or in the maximum employment period of 10 months per year, it is unlikely that the selection of a different fiscal year (or years) would significantly affect the amount of transfers calculated in this analysis.

B. Regulatory Flexibility Act

The Regulatory Flexibility Act, 5 U.S.C. 601 *et seq.* (RFA), imposes certain requirements on Federal rules that are subject to the notice and comment requirements of section 553(b) of the APA (5 U.S.C. 551 *et seq.*) and that are likely to have a significant economic impact on a substantial number of small entities. Under Section 553(b) of the APA, a general notice of proposed rulemaking is not required when an agency, for good cause, finds that notice and public comment thereon are impracticable, unnecessary, or contrary to the public interest. This interim final rule is exempt from the requirements of section 553(b) of the APA because DOL and DHS have made a good cause finding earlier in this preamble that a general notice of proposed rulemaking is impracticable and contrary to the public interest. Therefore, the RFA does not apply, and the Departments are not required to either certify that the rule would not have a significant economic impact on a substantial number of small entities or conduct a regulatory flexibility analysis. Consistent with the policy of the RFA, the Departments encourage the public to submit comments that suggest alternative rules that accomplish the stated purpose of this interim final rule and minimize the impact on small entities.

C. Unfunded Mandates Reform

Executive Order 12875—This rule will not create an unfunded Federal mandate upon any State, local or tribal government.

Unfunded Mandates Reform Act of 1995—This rule does not include any Federal mandate that may result in increased expenditures by State, local, and tribal governments, in the aggregate, of $100 million or more. It also does not result in increased expenditures by the private sector of $100 million or more, because participation in the H–2B program is entirely voluntary.

D. Paperwork Reduction Act

This interim rule contains no new information collection requirements for purposes of the Paperwork Reduction Act of 1995 (44 U.S.C. 3501 *et seq.*).

E. The Congressional Review Act

Consistent with the Congressional Review Act, 5 U.S.C. 808(2), this interim final rule will take effect immediately because the Departments have found, as stated earlier in this preamble, that there is good cause to conclude that notice, the opportunity for public participation, and a delay in the effective date are impracticable and contrary to the public interest. However, consistent with the CRA, 5 U.S.C. 801, DOL will, upon publication, submit to Congress and the Comptroller General of the United States the reports required by the Act.

F. Executive Order 13132—Federalism

DOL and DHS have reviewed this Final Rule in accordance with E.O. 13132 regarding federalism and has determined that it does not have federalism implications. The rule does not have substantial direct effects on States, on the relationship between the States, or on the distribution of power and responsibilities among the various levels of Government as described by E.O. 13132. Therefore, DOL has determined that this rule will not have a sufficient federalism implication to warrant the preparation of a summary impact statement.

G. Executive Order 13175—Indian Tribal Governments

This interim rule was reviewed under the terms of E.O. 13175 and determined not to have tribal implications. The rule does not have substantial direct effects on one or more Indian tribes, on the relationship between the Federal Government and Indian tribes, or on the distribution of power and responsibilities between the Federal Government and Indian tribes. As a result, no tribal summary impact statement has been prepared.

H. Assessment of Federal Regulations and Policies on Families

Section 654 of the Treasury and General Government Appropriations Act, enacted as part of the Omnibus Consolidated and Emergency Supplemental Appropriations Act of 1999 (Pub. L. 105–277, 112 Stat. 2681) requires the Departments to assess the impact of this interim rule on family well-being. A rule that is determined to have a negative effect on families must be supported with an adequate rationale. The Departments have assessed this interim rule and determined that it will not have a negative effect on families.

I. Executive Order 12630—Government Actions and Interference With Constitutionally Protected Property Rights

This interim rule is not subject to E.O. 12630, Governmental Actions and Interference with Constitutionally Protected Property Rights, because it

does not involve implementation of a policy with takings implications.

J. Executive Order 12988—Civil Justice

This interim final rule has been drafted and reviewed in accordance with E.O. 12988, Civil Justice Reform, and will not unduly burden the Federal court system. The Departments have developed the interim final rule to minimize litigation and provide a clear legal standard for affected conduct, and has reviewed the rule carefully to eliminate drafting errors and ambiguities.

K. Plain Language

DOL and DHS have drafted this interim rule in plain language.

List of Subjects

8 CFR Part 214

Administrative practice and procedure, Aliens, Employment, Foreign officials, Health professions, Reporting and recordkeeping requirements, Students.

20 CFR Part 655

Administrative practice and procedure, Employment, Employment and training, Enforcement, Foreign workers, Forest and forest products, Fraud, Health professions, Immigration, Labor, Longshore and harbor work, Migrant workers, Nonimmigrant workers, Passports and visas, Penalties, Reporting and recordkeeping requirements, Unemployment, Wages, Working conditions.

Department of Homeland Security

8 CFR Chapter I

Authority and Issuance

Accordingly, for the reasons stated in the joint preamble and pursuant to the authority vested in me as the Secretary of Homeland Security, part 214 of chapter I of title 8 of the Code of Federal Regulations is amended as follows:

PART 214—NONIMMIGRANT CLASSES

■ 1. The authority citation for part 214 continues to read as follows:

Authority: 8 U.S.C. 1101, 1102, 1103, 1182, 1184, 1186a, 1187, 1221, 1281, 1282, 1301–1305 and 1372; sec. 643, Pub. L. 104–208, 110 Stat. 3009–708; Public Law 106–386, 114 Stat. 1477–1480; section 141 of the Compacts of Free Association with the Federated States of Micronesia and the Republic of the Marshall Islands, and with the Government of Palau, 48 U.S.C. 1901 note, and 1931 note, respectively; 48 U.S.C. 1806; 8 CFR part 2.

■ 2. Section 214.2 is amended by revising paragraph (h)(6)(iii)(D) to read as follows:

§ 214.2 Special requirements for admission, extension, and maintenance of status.

(h) * * *

(6) * * *

(iii) * * *

(D) The Governor of Guam shall separately establish procedures for administering the temporary labor program under his or her jurisdiction. The Secretary of Labor shall separately establish for the temporary labor program under his or her jurisdiction, by regulation at 20 CFR 655, procedures for administering that temporary labor program under his or her jurisdiction, and shall determine the prevailing wage applicable to an application for temporary labor certification for that temporary labor program in accordance with the Secretary of Labor's regulation at 20 CFR 655.10.

Department of Labor

20 CFR Part 655

Authority and Issuance

Accordingly, for the reasons stated in the joint preamble and pursuant to the authority vested in me as the Acting Secretary of Labor of the United States, part 655 of title 20 of the Code of Federal Regulations is amended as follows:

PART 655—TEMPORARY EMPLOYMENT OF FOREIGN WORKERS IN THE UNITED STATES

■ 3. The authority citation for part 655 is revised to read as follows:

Authority: Section 655.0 issued under 8 U.S.C. 1101(a)(15)(E)(iii), 1101(a)(15)(H)(i) and (ii), 8 U.S.C. 1103(a)(6), 1182(m), (n) and (t), 1184(c), (g), and (j), 1188, and 1288(c) and (d); sec. 3(c)(1), Pub. L. 101–238, 103 Stat. 2099, 2102 (8 U.S.C. 1182 note); sec. 221(a), Pub. L. 101–649, 104 Stat. 4978, 5027 (8 U.S.C. 1184 note); sec. 303(a)(8), Pub. L. 102–232, 105 Stat. 1733, 1748 (8 U.S.C. 1101 note); sec. 323(c), Pub. L. 103–206, 107 Stat. 2428; sec. 412(e), Pub. L. 105–277, 112 Stat. 2681 (8 U.S.C. 1182 note); sec. 2(d), Pub. L. 106–95, 113 Stat. 1312, 1316 (8 U.S.C. 1182 note); 29 U.S.C. 49k; Pub. L. 109–423, 120 Stat. 2900; 8 CFR 214.2(h)(4)(i); and 8 CFR 214.2(h)(6)(iii).

■ 4. Amend § 655.10 by revising paragraph (b)(2) to read as follows:

§ 655.10 Determination of prevailing wage for temporary labor certification purposes.

* * * * *

(b) * * *

(2) If the job opportunity is not covered by a CBA, the prevailing wage for labor certification purposes shall be the arithmetic mean, except as provided in paragraph (b)(4) of this section, of the wages of workers similarly employed in the area of intended employment. The wage component of the BLS Occupational Employment Statistics Survey (OES) shall be used to determine the arithmetic mean, unless the employer provides a survey acceptable to OFLC under paragraph (f) of this section.

* * * * *

Signed at Washington, DC, this 19th of April 2013.

Janet Napolitano,

Secretary of Homeland Security.

Seth D. Harris,

Acting Secretary of Labor.

[FR Doc. 2013–09723 Filed 4–22–13; 4:15 pm]

BILLING CODE 9111–97–P; 4510–FP–P

DEPARTMENT OF THE INTERIOR

National Indian Gaming Commission

25 CFR Part 547

RIN 3141–AA27

Minimum Technical Standards for Class II Gaming Systems and Equipment

AGENCY: National Indian Gaming Commission.

ACTION: Final rule.

SUMMARY: The National Indian Gaming Commission (NIGC or Commission) is amending its rules regarding technical standards for Class II gaming systems and equipment to harmonize the charitable gaming exemption amount in the technical standards with the charitable gaming exemption amount in its Class II minimum internal control standards.

DATES: The effective date of these regulations is May 24, 2013.

FOR FURTHER INFORMATION CONTACT: Michael Hoenig, Senior Attorney, National Indian Gaming Commission, 1441 L Street NW., Suite 9100, Washington, DC 20005. Email: *michael_hoenig@nigc.gov*; telephone: 202–632–7003.

SUPPLEMENTARY INFORMATION:

I. Background

The Indian Gaming Regulatory Act (IGRA or the Act), Public Law 100–497, 25 U.S.C. 2701 *et seq.,* was signed into law on October 17, 1988. The Act established the Commission and set out a comprehensive framework for the regulation of gaming on Indian lands. The Act requires the Commission to ''monitor class II gaming conducted on Indian lands on a continuing basis'' and to ''promulgate such regulations and

guidelines as it deems appropriate to implement'' IGRA. 25 U.S.C. 2706(b)(1), (b)(10).

In 2008, the NIGC published a final rule in the **Federal Register** that established technical standards for ensuring the integrity of electronic Class II games and aids. 73 FR 60508, Oct. 10, 2008. The technical standards were designed to assist tribal gaming regulatory authorities and operators with ensuring the integrity and security of Class II gaming, the accountability of Class II gaming revenue, and provided guidance to equipment manufacturers and distributors of Class II gaming systems. The standards did not classify which games were Class II games and which games were Class III games.

II. Previous Rulemaking Activity

In 2012, the NIGC published a final rule in the **Federal Register** amending its part 547 technical standards to: Change the order of the first five sections; add definitions and amend existing definitions; amend requirements and time restrictions for grandfathered Class II gaming systems; amend the requirements concerning minimum odds for Class II games; amend standards for test labs; remove references to the Federal Communications Commission and Underwriters Laboratory; require a player interface to display a serial number and date of manufacture; amend requirements concerning approval of downloads to a Class II gaming system; and to clarify the term ''alternate standard.'' 77 FR 58473, Sept. 21, 2012. In addition, § 547.5(e)(5) of the rule states that the part does not apply to a charitable gaming operation provided that, among other requirements, the amount of gross gaming revenue of the charitable gaming operation does not exceed $1 million. The rule became effective on October 22, 2012.

At the same time that the NIGC amended and published part 547, it amended and published rules containing minimum internal control standards (MICS) for Class II gaming. 77 FR 58708, Sept. 21, 2012. Similar to the part 547 technical standards, the part 543 MICS exempt charitable gaming operations that earn less than a set threshold amount. However, the Commission increased the threshold amount in the MICS from $1 million to $3 million.

In February 2013, the Commission published a Notice of Proposed Rulemaking proposing to revise the threshold amount in § 547.5(e)(5) from $1 million to $3 million in order to harmonize the charitable gaming exemption amounts in the technical standards and the MICS to ensure that the exemption for a ''charitable gaming operation'' is consistent throughout the Commission's rules (78 FR 11795, Feb. 20, 2013).

III. Review of Public Comments

In response to its Notice of Proposed Rulemaking published on February 20, 2013, the Commission received the following comments:

547.5 How does a tribal government, TGRA, or tribal gaming operation comply with this part?

Comment: One commenter commended the current Commission for its efforts to improve existing regulations and for the diligence with which it has undertaken its efforts to consult with tribes. The commenter agrees that the proposed revision is needed in order to match the charitable gaming exemption thresholds of both the technical standards and the MICS.

Response: No response is necessary.

Comment: One commenter stated that he was puzzled by the $3 million charitable gaming exemption amount, and requested clarification on whether this threshold amount will have an impact on the amount of Class II gaming revenue fees that are required to be paid to the NIGC.

Response: The Commission states that the $3 million threshold amount does not impact the amount of Class II gaming revenue fees that are required to be paid to the NIGC; but instead, merely exempts charitable gaming operations whose annual gross gaming revenue does not exceed $3 million from having to abide by the technical standards contained in part 547. The Commission believes that no further revisions to these rules are necessary.

Regulatory Matters

Regulatory Flexibility Act

The rule will not have a significant impact on a substantial number of small entities as defined under the Regulatory Flexibility Act, 5 U.S.C. 601, *et seq.* Moreover, Indian tribes are not considered to be small entities for the purposes of the Regulatory Flexibility Act.

Small Business Regulatory Enforcement Fairness Act

The rule is not a major rule under 5 U.S.C. 804(2), the Small Business Regulatory Enforcement Fairness Act. The rule does not have an effect on the economy of $100 million or more. The rule will not cause a major increase in costs or prices for consumers, individual industries, federal, state, local government agencies or geographic regions. Nor will the rule have a significant adverse effect on competition, employment, investment, productivity, innovation, or the ability of the enterprises to compete with foreign based enterprises.

Unfunded Mandate Reform Act

The Commission, as an independent regulatory agency, is exempt from compliance with the Unfunded Mandates Reform Act, 2 U.S.C. 1502(1); 2 U.S.C. 658(1).

Takings

In accordance with Executive Order 12630, the Commission has determined that the rule does not have significant takings implications. A takings implication assessment is not required.

Civil Justice Reform

In accordance with Executive Order 12988, the Commission has determined that the rule does not unduly burden the judicial system and meets the requirements of sections 3(a) and 3(b)(2) of the Order.

National Environmental Policy Act

The Commission has determined that the rule does not constitute a major federal action significantly affecting the quality of the human environment and that no detailed statement is required pursuant to the National Environmental Policy Act of 1969, 42 U.S.C. 4321, *et seq.*

Paperwork Reduction Act

The information collection requirements contained in this rule were previously approved by the Office of Management and Budget as required by the Paperwork Reduction Act, 44 U.S.C. 3501, *et seq.,* and assigned OMB Control Number 3141–0014. The OMB control number expires on November 30, 2015.

List of Subjects in 25 CFR Part 547

Gambling; Indian—Indian lands; Indian—tribal government.

For the reasons set forth in the preamble, the Commission amends 25 CFR part 547 as follows:

PART 547—MINIMUM TECHNICAL STANDARDS FOR CLASS II GAMING SYSTEMS AND EQUIPMENT

■ 1. The authority citation for part 547 continues to read as follows:

Authority: 25 U.S.C. 2706(b).

■ 2. In § 547.5, revise paragraph (e)(5) to read as follows:

§ 547.5 How does a tribal government, TGRA, or tribal gaming operation comply with this part?

* * * * *

(e) * * *

(5) The annual gross gaming revenue of the charitable gaming operation does not exceed $3,000,000.

* * * * *

Dated: April 18, 2013.

Tracie L. Stevens,

Chairwoman.

Daniel J. Little,

Associate Commissioner.

[FR Doc. 2013–09604 Filed 4–23–13; 8:45 am]

BILLING CODE 7565–01–P

DEPARTMENT OF HOMELAND SECURITY

Coast Guard

33 CFR Part 100

[Docket No. USCG–2013–0211]

RIN 1625–AA08

Special Local Regulation; Hebda Cup Rowing Regatta, Trenton Channel; Detroit River, Wyandotte, MI

AGENCY: Coast Guard, DHS.

ACTION: Temporary final rule.

SUMMARY: The Coast Guard is establishing a temporary special local regulation on the Trenton Channel of the Detroit River, Wyandotte, Michigan. This action is necessary and intended to ensure safety of life on the navigable waters immediately prior to, during, and immediately after the Hebda Cup Rowing Regatta. This special local regulation will establish restrictions upon, and control movement of, vessels in a portion of the Trenton Channel. During the enforcement period, no person or vessel may enter the regulated area without permission of the Captain of the Port.

DATES: This temporary final rule is effective from 7:30 a.m. until 4:30 p.m. on April 27, 2013.

ADDRESSES: Documents mentioned in this preamble are part of docket USCG–2013–0211. To view documents mentioned in this preamble as being available in the docket, go to *www.regulations.gov*, type the docket number in the ''SEARCH'' box, and click ''Search.'' You may visit the Docket Management Facility, Department of Transportation, West Building Ground Floor, Room W12–140, 1200 New Jersey Avenue SE., Washington, DC 20590, between 9 a.m. and 5 p.m., Monday through Friday, except Federal holidays.

FOR FURTHER INFORMATION CONTACT: If you have questions on this temporary rule, call or email LT Adrian Palomeque, Prevention Department, Sector Detroit, Coast Guard; telephone (313) 568–9508, email *Adrian.F.Palomeque@uscg.mil*. If you have questions on viewing the docket, call Renee V. Wright, Program Manager, Docket Operations, telephone 202–366–9826.

SUPPLEMENTARY INFORMATION:

Table of Acronyms

DHS Department of Homeland Security
FR Federal Register
NPRM Notice of Proposed Rulemaking

A. Regulatory History and Information

The Coast Guard is issuing this temporary final rule without prior notice and opportunity to comment pursuant to authority under section 4(a) of the Administrative Procedure Act (APA) (5 U.S.C. 553(b)). This provision authorizes an agency to issue a rule without prior notice and opportunity to comment when the agency for good cause finds that those procedures are ''impracticable, unnecessary, or contrary to the public interest.'' Under 5 U.S.C. 553(b)(B), the Coast Guard finds that good cause exists for not publishing a notice of proposed rulemaking (NPRM) with respect to this rule because waiting for a notice and comment period to run is impracticable, unnecessary, and contrary to the public interest. The final details for this year's boat race were not known to the Coast Guard with sufficient time for the Coast Guard to solicit public comments before the start of the event. Thus, delaying this temporary rule to wait for a notice and comment period to run would be impracticable and contrary to the public interest because it would inhibit the Coast Guard's ability to protect the public from the hazards associated with this boat race.

It is also unnecessary to solicit public comments because the Hebda Cup Rowing Regatta has taken place annually under the same name for more than eight years. In light of the long history of this event and the prior years that it has been regulated by the Coast Guard, public awareness in the affected area is high, making it unnecessary to wait for a comment period to run before enforcing this special local regulation for the April 27, 2013 Hebda Cup Rowing Regatta event.

Under 5 U.S.C. 553(d)(3), the Coast Guard finds that good cause exists for making this rule effective less than 30 days after publication in the **Federal Register**.

For the same reasons discussed in the preceding two paragraphs, waiting for a 30 day notice period to run would be impracticable and contrary to the public interest.

B. Basis and Purpose

On April 27, 2013, the Wyandotte Boat Club is holding a rowing race that will require the immediate area to be clear of all vessel traffic. The rowing race will occur between 7:30 a.m. and 4:30 p.m. on April 27, 2013. The Captain of the Port Detroit has determined that the likely combination of recreation vessels, commercial vessels, and large numbers of spectators in close proximity to the boat race pose extra and unusual hazards to public safety and property. Thus, the Captain of the Port Detroit has determined that establishing a Special Local Regulation, pursuant to the authority in 33 U.S.C. § 1233, around the race's course will help ensure the safety of life during this event.

C. Discussion of Rule

In light of the aforesaid hazards, the Captain of the Port Detroit has determined that a special local regulation is necessary to protect spectators, vessels, and participants. The special local regulation will encompass all waters of the Detroit River, Trenton Channel starting at a point on land at position *42°10′58″ N, 083°9′23″ W;* following the Trenton Channel north to position *42°11′44″ N, 083°8′56″ W;* and will be enforced on April 27, 2013, from 7:30 a.m. until 4:30 p.m. All geographic coordinates are North American Datum of 1983 (NAD 83).

Two thirds of the Trenton Channel on the western portion of the regulated area, from the Wyandotte shoreline to a point approximately 670 feet east into the channel, will be designated as the race zone, while the remaining third portion on the eastern side of the of the regulated area, approximately 330 feet in width, will be designated as a buffer zone.

Entry into, transiting, or anchoring within the race zone the regulated area is prohibited unless authorized by the Captain of the Port Detroit or his designated on scene representative. Entry into and transiting within buffer zone of the regulated area is only authorized at no-wake speed and requires the authorization of the Captain of the Port or his designated on scene representative. The Captain of the Port or his designated on scene

representative may be contacted via VHF Channel 16.

D. Regulatory Analyses

We developed this rule after considering numerous statutes and executive orders related to rulemaking. Below we summarize our analyses based on these statutes or executive orders.

1. Regulatory Planning and Review

This rule is not a significant regulatory action under section 3(f) of Executive Order 12866, Regulatory Planning and Review, as supplemented by Executive Order 13563, Improving Regulation and Regulatory Review, and does not require an assessment of potential costs and benefits under section 6(a)(3) of Executive Order 12866 or under section 1 of Executive Order 13563. The Office of Management and Budget has not reviewed it under those Orders. It is not ''significant'' under the regulatory policies and procedures of the Department of Homeland Security (DHS).

We conclude that this rule is not a significant regulatory action because we anticipate that it will have minimal impact on the economy, will not interfere with other agencies, will not adversely alter the budget of any grant or loan recipients, and will not raise any novel legal or policy issues.

The Coast Guard's use of this special local regulation will be of relatively small size and short duration, and it is designed to minimize the impact on navigation. Moreover, vessels may, when circumstances allow, obtain permission from the Captain of the Port to transit through the area affected by this special local regulation. Overall, the Coast Guard expects minimal impact to vessel movement from the enforcement of this special local regulation.

2. Impact on Small Entities

The Regulatory Flexibility Act of 1980 (RFA), 5 U.S.C. 601–612, as amended, requires federal agencies to consider the potential impact of regulations on small entities during rulemaking. The term ''small entities'' comprises small businesses, not-for-profit organizations that are independently owned and operated and are not dominant in their fields, and governmental jurisdictions with populations of less than 50,000. The Coast Guard certifies under 5 U.S.C. 605(b) that this rule will not have a significant economic impact on a substantial number of small entities. This rule will affect the following entities, some of which might be small entities: The owners or operators of vessels intending to transit or anchor in this portion of the Trenton Channel near Wyandotte, MI between 7:30 a.m. until 4:30 p.m. on April 27, 2013.

This special local regulation will not have a significant economic impact on a substantial number of small entities for the following reasons: This rule will only be in effect and enforced for nine hours on one day. The race event will be temporarily stopped for any deep draft vessels transiting through the shipping lanes. The Coast Guard will give notice to the public via a Broadcast Notice to Mariners that the regulation is in effect, allowing vessel owners and operators to plan accordingly.

3. Assistance for Small Entities

Under section 213(a) of the Small Business Regulatory Enforcement Fairness Act of 1996 (Pub. L. 104–121), we want to assist small entities in understanding this rule to that they can better evaluate its effects on them. If this rule would affect your small business, organization, or governmental jurisdiction and you have questions concerning its provisions or options for compliance, please contact the person listed in the **FOR FURTHER INFORMATION CONTACT** section above. Small businesses may send comments on the actions of Federal employees who enforce, or otherwise determine compliance with, Federal regulations to the Small Business and Agriculture Regulatory Enforcement Ombudsman and the Regional Small Business Regulatory Fairness Boards. The Ombudsman evaluates these actions annually and rates each agency's responsiveness to small business. If you wish to comment on actions by employees of the Coast Guard, call 1–888–REG–FAIR (1–888–734–3247). The Coast Guard will not retaliate against small entities that question or complain about this rule or any policy or action of the Coast Guard.

4. Collection of Information

This rule will not call for a new collection of information under the Paperwork Reduction Act of 1995 (44 U.S.C. 3501–3520).

5. Federalism

A rule has implications for federalism under Executive Order 13132, Federalism, if it has a substantial direct effect on the States, on the relationship between the national government and the States, or on the distribution of power and responsibilities among the various levels of government. We have analyzed this rule under that Order and determined that this rule does not have implications for federalism.

6. Unfunded Mandates Reform Act

The Unfunded Mandates Reform Act of 1995 (2 U.S.C. 1531–1538) requires Federal agencies to assess the effects of their discretionary regulatory actions. In particular, the Act addresses actions that may result in the expenditure by a State, local, or tribal government, in the aggregate, or by the private sector of $100,000,000 (adjusted for inflation) or more in any one year. Though this rule will not result in such expenditure, we do discuss the effects of this rule elsewhere in this preamble.

7. Taking of Private Property

This rule will not cause a taking of private property or otherwise have taking implications under Executive Order 12630, Governmental Actions and Interference with Constitutionally Protected Property Rights.

8. Civil Justice Reform

This rule meets applicable standards in sections 3(a) and 3(b)(2) of Executive Order 12988, Civil Justice Reform, to minimize litigation, eliminate ambiguity, and reduce burden.

9. Protection of Children

We have analyzed this rule under Executive Order 13045, Protection of Children from Environmental Health Risks and Safety Risks. This rule is not an economically significant rule and does not create an environmental risk to health or risk to safety that may disproportionately affect children.

10. Indian Tribal Governments

This rule does not have tribal implications under Executive Order 13175, Consultation and Coordination with Indian Tribal Governments, because it does not have a substantial direct effect on one or more Indian tribes, on the relationship between the Federal Government and Indian tribes, or on the distribution of power and responsibilities between the Federal Government and Indian tribes.

11. Energy Effects

This action is not a ''significant energy action'' under Executive Order 13211, Actions Concerning Regulations That Significantly Affect Energy Supply, Distribution, or Use.

12. Technical Standards

This rule does not use technical standards. Therefore, we did not consider the use of voluntary consensus standards.

13. Environment

We have analyzed this rule under Department of Homeland Security

Management Directive 023–01 and Commandant Instruction M16475.lD, which guide the Coast Guard in complying with the National Environmental Policy Act of 1969 (NEPA) (42 U.S.C. 4321–4370f), and have concluded this action is one of a category of actions which do not individually or cumulatively have a significant effect on the human environment. This rule involves the establishment of a special local regulation issued in conjunction with a regatta or marine parade, and, therefore it is categorically excluded from further review under paragraph 34(h) of Figure 2–1 of the Commandant Instruction. During the annual permitting process for this event an environmental analysis was conducted, and thus, no preliminary environmental analysis checklist or Categorical Exclusion Determination (CED) are required for this rulemaking action. We seek any comments or information that may lead to the discovery of a significant environmental impact from this rule.

List of Subjects in 33 CFR Part 100

Marine safety, Navigation (water), Reporting and recordkeeping requirements, Waterways.

For the reasons discussed in the preamble, the Coast Guard amends 33 CFR part 100 as follows:

PART 100—SAFETY OF LIFE ON NAVIGABLE WATERS

■ 1. The authority citation for part 100 continues to read as follows:

Authority: 33 U.S.C. 1233.

■ 2. Add § 100.T09–0211 to read as follows:

§ 100.T09–0211 Special Local Regulation; Hebda Cup Rowing Regatta, Wyandotte, MI.

(a) *Regulated Area.* A regulated area is established to include all waters of the Trenton Channel in the Detroit River, Wyandotte, Michigan, starting at a point on land at position *42°10′58″ N, 083°9′23″ W;* following the Trenton Channel north to position *42°11′44″ N, 083°8′56″ W.* All geographic coordinates are North American Datum of 1983 (NAD 83). Two thirds of the Trenton Channel on the western portion of the regulated area, from the Wyandotte shoreline to a point approximately 670 feet east into the channel, will be designated as the race zone, while the remaining third portion on the eastern side of the of the regulated area, approximately 330 feet in width, will be designated as a buffer zone.

(b) *Enforcement Period.* This regulation will be enforced from 7:30 a.m. until 4:30 p.m. on April 27, 2013.

(c) *Regulations.*

(1) No vessel may enter, transit through, or anchor within the race zone of the regulated area unless authorized by the Captain of the Port Detroit, or his designated on-scene representative.

(2) Vessels may enter and transit through the buffer zone on the eastern side of regulated area at no-wake speed with the authorization of the Captain of the Port or his designated on scene representative.

(3) The ''on-scene representative'' of the Captain of the Port, Sector Detroit is any Coast Guard commissioned, warrant or petty officer or a Federal, State, or local law enforcement officer designated by or assisting the Captain of the Port, Sector Detroit to act on his behalf.

(4) Vessel operators desiring to enter or operate within the regulated area shall contact the Coast Guard Patrol Commander to obtain permission to do so. The Captain of the Port, Sector Detroit or his on-scene representative may be contacted via VHF Channel 16 or at 313–568–9464. Vessel operators given permission to enter or operate in the security zones must comply with all directions given to them by the Captain of the Port, Sector Detroit, or his on-scene representative.

Dated: April 8, 2013.

J.E. Ogden,

Captain, U.S. Coast Guard, Captain of the Port Detroit.

[FR Doc. 2013–09718 Filed 4–23–13; 8:45 am]

BILLING CODE 9110–04–P

DEPARTMENT OF HOMELAND SECURITY

Coast Guard

33 CFR Part 100

[Docket No. USCG–2013–0190]

RIN 1625–AA08

Special Local Regulation; Tuscaloosa Dragon Boat Races; Black Warrior River; Tuscaloosa, AL

AGENCY: Coast Guard, DHS.

ACTION: Temporary final rule.

SUMMARY: The Coast Guard is establishing a temporary special local regulation for a portion of the Black Warrior River, Tuscaloosa, AL. This action is necessary for the safety of participants and spectators on during the Junior League of Tuscaloosa Dragon Boat Races. Entry into, transiting or anchoring in this area is prohibited to all vessels not registered with the sponsor as participants or not part of the regatta patrol, unless specifically authorized by the Captain of the Port (COTP) Mobile or a designated representative.

DATES: This rule is effective from 10:30 a.m. until 4:30 p.m. on April 27, 2013.

ADDRESSES: Documents mentioned in this preamble are part of docket USCG–2013–0190. To view documents mentioned in this preamble as being available in the docket, go to *http://www.regulations.gov*, type the docket number in the ''SEARCH'' box and click ''SEARCH''. Click on Open Docket Folder on the line associated with this rulemaking. You may also visit the Docket Management Facility in Room W12–140 on the ground floor of the Department of Transportation West Building, 1200 New Jersey Avenue SE., Washington, DC 20590, between 9 a.m. and 5 p.m., Monday through Friday, except Federal holidays.

FOR FURTHER INFORMATION CONTACT: If you have questions on this temporary rule, call or email LT Lenell J. Carson, Sector Mobile, Waterways Division, U.S. Coast Guard; telephone 251–441–5940, email *Lenell.J.Carson@uscg.mil.* If you have questions on viewing or submitting material to the docket, call Barbara Hairston, Program Manager, Docket Operations, telephone 202–366–9826.

SUPPLEMENTARY INFORMATION:

Table of Acronyms

DHS Department of Homeland Security
FR Federal Register
NPRM Notice of Proposed Rulemaking
COTP Captain of the Port

A. Regulatory History and Information

The Coast Guard is issuing this temporary final rule without prior notice and opportunity to comment pursuant to authority under section 4(a) of the Administrative Procedure Act (APA) (5 U.S.C. 553(b)). This provision authorizes an agency to issue a rule without prior notice and opportunity to comment when the agency for good cause finds that those procedures are ''impracticable, unnecessary, or contrary to the public interest.'' Under 5 U.S.C. 553(b)(B), the Coast Guard finds that good cause exists for not publishing a NPRM with respect to this rule because there is insufficient time to publish a NPRM. The Coast Guard received an application for a Marine Event Permit on March 17, 2013 from the Junior League of Tuscaloosa to conduct their event on April 27, 2013. After reviewing the details of the event and the permit application, the Coast Guard determined that a special local regulation is needed and delaying or foregoing this safety measure would be contrary to the public interest. The special local regulation is

needed to safeguard persons and vessels from safety hazards associated with the Junior League of Tuscaloosa Dragon Boat Races. This event is advertised as scheduled and participants, sponsors and spectators have planned for the event. It would be impracticable and unnecessary to reschedule the planned and advertised event in order to complete the NPRM process.

For the same reasons, under 5 U.S.C. 553(d)(3), the Coast Guard finds that good cause exists for making this rule effective less than 30 days after publication in the **Federal Register**. Delaying the effective date to provide a full 30 day notice is contrary to public interest because immediate action is needed to protect persons and vessels from safety hazards associated with the Junior League of Tuscaloosa Dragon Boat Races.

B. Basis and Purpose

The Junior League of Tuscaloosa is sponsoring a Dragon Boat Race on the Black Warrior River. The introduction of Dragon Boats into a commercially transited river system poses significant safety hazards to both, the Dragon Boat racers and the commercial vessels. The COTP Mobile is establishing a temporary special local regulation for a portion of the Black Warrior River, Tuscaloosa, AL, to safeguard persons and vessels during the Dragon Boat races. The legal basis and authorities for this rule are found in 33 U.S.C. 1233 and 33 CFR part 100, which authorizes the Coast Guard to propose, establish, and define regulatory special local regulations for safety during marine events.

The COTP anticipates minimal impact on vessel traffic due to this regulation. However, the temporary special local regulation is deemed necessary for the safeguard of life and property within the COTP Mobile zone.

C. Discussion of Comments, Changes and the Temporary Final Rule

The Coast Guard is establishing a temporary special local regulation for a portion of the Black Warrior River from river mile 340.5 to river mile 341.0, Tuscaloosa, AL. This temporary rule will safeguard life and property in this area. Entry into, transiting or anchoring in this zone is prohibited to all vessels not registered with the sponsor as participants or not part of the regatta patrol, unless specifically authorized by the COTP Mobile or a designated representative. They may be contacted on VHF–FM Channel 16 or through Coast Guard Sector Mobile at 251–441–5976.

The COTP Mobile or a designated representative will inform the public through broadcast notice to mariners of changes in the effective period for the temporary special local regulation. This rule is effective from 10:30 a.m. until 4:30 p.m. on April 27, 2013.

D. Regulatory Analyses

We developed this rule after considering numerous statutes and executive orders related to rulemaking. Below we summarize our analyses based on a number of these statutes or executive orders.

1. Regulatory Planning and Review

This rule is not a significant regulatory action under section 3(f) of Executive Order 12866, Regulatory Planning and Review, as supplemented by Executive Order 13563, Improving Regulation and Regulatory Review, and does not require an assessment of potential costs and benefits under section 6(a)(3) of Executive Order 12866 or under section 1 of Executive Order 13563. The Office of Management and Budget has not reviewed it under those Orders.

The temporary special local regulation listed in this rule will only restrict vessel traffic from entering, transiting, or anchoring within a small portion of the Black Warrior River, Tuscaloosa, AL. The effect of this regulation will not be significant for several reasons: (1) This rule will only affect vessel traffic for a short duration; (2) vessels may request permission from the COTP to transit through the regulated area; and (3) the impacts on routine navigation are expected to be minimal. Notifications to the marine community will be made through Local Notice to Mariners and Broadcast Notice to Mariners. These notifications will allow the public to plan operations around the regulated area.

2. Impact on Small Entities

The Regulatory Flexibility Act of 1980 (RFA), 5 U.S.C. 601–612, as amended, requires federal agencies to consider the potential impact of regulations on small entities during rulemaking. The term ''small entities'' comprises small businesses, not-for-profit organizations that are independently owned and operated and are not dominant in their fields, and governmental jurisdictions with populations of less than 50,000. The Coast Guard certifies under 5 U.S.C. 605(b) that this rule will not have a significant economic impact on a substantial number of small entities. This rule will affect the following entities, some of which may be small entities: the owners or operators of vessels intending to transit or anchor in the affected portion of the Black Warrior River, Tuscaloosa, AL during the Dragon Boat Races. This temporary special local regulation will not have a significant economic impact on a substantial number of small entities for the following reasons. The regulated area is limited in size, is of short duration and vessel traffic may request permission from the COTP Mobile or a designated representative to enter or transit through the regulated area.

3. Assistance for Small Entities

Under section 213(a) of the Small Business Regulatory Enforcement Fairness Act of 1996 (Pub. L. 104–121), we want to assist small entities in understanding this rule. If the rule would affect your small business, organization, or governmental jurisdiction and you have questions concerning its provisions or options for compliance, please contact the person listed in the **FOR FURTHER INFORMATION CONTACT**, above.

Small businesses may send comments on the actions of Federal employees who enforce, or otherwise determine compliance with, Federal regulations to the Small Business and Agriculture Regulatory Enforcement Ombudsman and the Regional Small Business Regulatory Fairness Boards. The Ombudsman evaluates these actions annually and rates each agency's responsiveness to small business. If you wish to comment on actions by employees of the Coast Guard, call 1–888–REG–FAIR (1–888–734–3247). The Coast Guard will not retaliate against small entities that question or complain about this rule or any policy or action of the Coast Guard.

4. Collection of Information

This rule will not call for a new collection of information under the Paperwork Reduction Act of 1995 (44 U.S.C. 3501–3520).

5. Federalism

A rule has implications for federalism under Executive Order 13132, Federalism, if it has a substantial direct effect on the States on the relationship between the national government and the States, or on the distribution of power and responsibilities among the various levels of government. We have analyzed this rule under that Order and have determined that it does not have implications for federalism.

6. Protest Activities

The Coast Guard respects the First Amendment rights of protesters. Protesters are asked to contact the

person listed in the **FOR FURTHER INFORMATION CONTACT** section to coordinate protest activities so that your message can be received without jeopardizing the safety or security of people, places or vessels.

7. Unfunded Mandates Reform Act

The Unfunded Mandates Reform Act of 1995 (2 U.S.C. 1531–1538) requires Federal agencies to assess the effects of their discretionary regulatory actions. In particular, the Act addresses actions that may result in the expenditure by a State, local, or tribal government, in the aggregate, or by the private sector of $100,000,000 (adjusted for inflation) or more in any one year. Though this rule would not result in such expenditure, we do discuss the effects of this rule elsewhere in this preamble.

8. Taking of Private Property

This rule would not cause a taking of private property or otherwise have taking implications under Executive Order 12630, Governmental Actions and Interference with Constitutionally Protected Property Rights.

9. Civil Justice Reform

This rule meets applicable standards in sections 3(a) and 3(b)(2) of Executive Order 12988, Civil Justice Reform, to minimize litigation, eliminate ambiguity, and reduce burden.

10. Protection of Children From Environmental Health Risks

We have analyzed this under Executive Order 13045, Protection of Children from Environmental Health Risks and Safety Risks. This rule is not an economically significant rule and does not create an environmental risk to health or risk to safety that may disproportionately affect children.

11. Indian Tribal Governments

This rule does not have tribal implications under Executive Order 13175, Consultation and Coordination with Indian Tribal Governments, because it would not have a substantial direct effect on one or more Indian tribes, on the relationship between the Federal Government and Indian tribes, or on the distribution of power and responsibilities between the Federal Government and Indian tribes.

12. Energy Effects

This rule is not a ''significant energy action'' under Executive Order 13211, Actions Concerning Regulations That Significantly Affect Energy Supply, Distribution, or Use.

13. Technical Standards

This rule does not use technical standards. Therefore, we did not consider the use of voluntary consensus standards.

14. Environment

We have analyzed this rule under Department of Homeland Security Management Directive 023–01 and Commandant Instruction M16475.lD, which guide the Coast Guard in complying with the National Environmental Policy Act of 1969 (NEPA) (42 U.S.C. 4321–4370f), and have made a preliminary determination that this action is one of a category of actions which do not individually or cumulatively have a significant effect on the human environment. This rule involves safety for the public and is not expected to result in any significant adverse environmental impact as described in NEPA. This rule is categorically excluded from further review under paragraph (34)(h) of figure 2–1 of the Commandant Instruction. Therefore, an environmental analysis checklist and a categorical exclusion determination are not required for this rule.

List of Subjects 33 CFR Part 100

Marine safety, Navigation (water), Reporting and recordkeeping requirements, Waterways.

For the reasons discussed in the preamble, the Coast Guard amends 33 CFR part 100 as follows:

PART 100—SAFETY OF LIFE ON NAVIGABLE WATERS

■ 1. The authority citation for part 100 continues to read as follows:

Authority: 33 U.S.C. 1233.

■ 2. Add § 100.T08–0190 to read as follows:

§ 100.T08–0190 Special Local Regulation; Tuscaloosa Dragon Boat Races; Black Warrior River; Tuscaloosa, AL.

(a) *Location.* The following area is a regulated area: a portion of the Black Warrior River, from river mile 340.5 to river mile 341, Tuscaloosa, AL.

(b) *Effective dates.* This rule will be effective and enforceable with actual notice from 10:30 a.m. until 4:30 p.m. on April 27, 2013.

(c) *Special Local Regulations.* (1) The Coast Guard will patrol the regulated area under the direction of a designated Coast Guard Patrol Commander. The Patrol Commander may be contacted on Channel 16 VHF-FM (156.8 MHz) by the call sign ''PATCOM.''

(2) All Persons and vessels not registered with the sponsor as participants or official patrol vessels are considered spectators. The ''official patrol vessels'' consist of any Coast Guard, state, or local law enforcement and sponsor provided vessels assigned or approved by the Captain of the Port Mobile to patrol the regulated area.

(3) Spectator vessels desiring to transit the regulated area may do so only with prior approval of the Patrol Commander and when so directed by that officer and will be operated at a minimum safe navigation speed in a manner which will not endanger participants in the regulated area or any other vessels.

(4) No spectator shall anchor, block, loiter, or impede the through transit of participants or official patrol vessels in the regulated area during the effective dates and times, unless cleared for entry by or through an official patrol vessel.

(5) The patrol commander may forbid and control the movement of all vessels in the regulated area. When hailed or signaled by an official patrol vessel, a vessel shall come to an immediate stop and comply with the directions given. Failure to do so may result in expulsion from the area, citation for failure to comply, or both.

(6) Any spectator vessel may anchor outside the regulated area, but may not anchor in, block, or loiter in a navigable channel. Spectator vessels may be moored to a waterfront facility within the regulated area in such a way that they shall not interfere with the progress of the event. Such mooring must be complete at least 30 minutes prior to the establishment of the regulated area and remain moored through the duration of the event.

(7) The Patrol Commander may terminate the event or the operation of any vessel at any time it is deemed necessary for the protection of life or property.

(8) The Patrol Commander will terminate enforcement of the special local regulations at the conclusion of the event.

(d) *Informational Broadcasts.* The Captain of the Port or a designated representative will inform the public through broadcast notices to mariners of the enforcement period for the regulated area as well as any changes in the planned schedule.

Dated: April 4, 2013.

D.J. Rose,

Captain, U.S. Coast Guard, Captain of the Port Mobile.

[FR Doc. 2013–09721 Filed 4–23–13; 8:45 am]

BILLING CODE 9110–04–P

DEPARTMENT OF HOMELAND SECURITY

Coast Guard

33 CFR Part 165

[Docket No. USCG–2013–0199]

Safety Zones; Fireworks Events in Captain of the Port New York Zone

AGENCY: Coast Guard, DHS.

ACTION: Notice of enforcement of regulation.

SUMMARY: The Coast Guard will enforce various safety zones in the Captain of the Port New York Zone on the specified dates and times. This action is necessary to ensure the safety of vessels and spectators from hazards associated with fireworks displays. During the enforcement period, no person or vessel may enter the safety zone without permission of the Captain of the Port (COTP).

DATES: The regulation for the safety zone described in 33 CFR 165.160 will be enforced on the date and time listed in the table in **SUPPLEMENTARY INFORMATION**.

FOR FURTHER INFORMATION CONTACT: If you have questions on this notice, call or email Ensign Kimberly Beisner, Coast Guard; telephone 718–354–4163, email *Kimberly.A.Beisner@uscg.mil.*

SUPPLEMENTARY INFORMATION:

The Coast Guard will enforce the safety zone listed in 33 CFR 165.160 on the specified date and time as indicated in Table 1 below. This regulation was published in the **Federal Register** on November 9, 2011 (76 FR 69614).

TABLE 1

1. North Shore LIJ System Gala, Pier 90, Hudson River Safety Zone, 33 CFR 165.160(5.4).	• Launch site: A barge launch located in approximate position 40°46′11.8″ N, 074°00′14.8″ W (NAD 1983), approximately 375 yards west of Pier 90, Manhattan, New York. • Date: April 25, 2013. • Time: 9:30 p.m.–10:45 p.m.
2. Norwegian Breakaway, Liberty Island Safety Zone, 33 CFR 165.160(2.1).	• Launch site: A barge launch located in approximate position 40°41′16.5'' N, 074°02′23″ W (NAD 1983), located in Federal Anchorage 20–C, about 360 yards east of Liberty Island. • Date: May 8, 2013 • Time: 8:20 p.m.–9:30 p.m.
3. NECO Awards, Liberty Island Safety Zone, 33 CFR 165.160 (2.1)	• Launch site: A barge launch located in approximate position 40°41′16.5″ N, 074°02′23″ W (NAD 1983), located in Federal Anchorage 20–C, about 360 yards east of Liberty Island. • Date: May 11–12, 2013 • Time: 11:00 p.m.—00:10 a.m.
4. Allied PRA—Petsmart Fireworks, Liberty Island Safety Zone, 33 CFR 165.160 (2.1).	• Launch site: A barge launch located in approximate position 40°41′16.5″ N, 074°02′23″ W (NAD 1983), located in Federal Anchorage 20–C, about 360 yards east of Liberty Island. • Date: May 15, 2013. • Time: 8:15 p.m.–9:30 p.m.
5. Shackman Associates, Liberty Island Safety Zone, CFR 165.160 (2.1).	• Launch site: A barge launch located in approximate position 40°41′16.5″ N, 074°02′23″ W (NAD 1983), located in Federal Anchorage 20–C, about 360 yards east of Liberty Island. • Date: May 23, 2013. • Time: 9:50 p.m.–10:25 p.m.
6. Fort Hamilton Independence Celebration, Fort Hamilton Safety Zone, 33 CFR 165.160 (2.14).	• Launch site: A barge launch located in approximate position 40°36′00″ N, 074°01′42.5″ W (NAD 1983), approximately 1400 yards southeast of the Verrazano-Narrows Bridge. • Date: June 29, 2013. • Time: 9:15 p.m.–10:30 p.m.
7. Larchmont Yacht Club, Larchmont Harbor South Safety Zone, 33 CFR 165.160(3.12).	• Launch site: A barge launch located in approximate position 40°55′16″ N, 073°44′15″ W (NAD 1983), approximately 440 yards north of Umbrella Rock, Larchmont Harbor, New York. • Date: July 4, 2013. • Time: 9:30 p.m.–10:30 p.m.
8. City of Poughkeepsie, Poughkeepsie, NY, Safety Zone, 33 CFR 165.160(5.13).	• Launch site: A barge launch located in approximate position 41°42′24.50″ N, 073°56′44.16″ W (NAD 1983), approximately 420 yards north of the Mid Hudson Bridge. • Date: July 4, 2013 • Time: 8:30 p.m.–10:00 p.m.
9. Breezy Point Coop, Rockaway Inlet Safety Zone, 33 CFR 165.160(2.9).	• Launch site: A barge launch located in approximate position 40°34′19.1″ N, 073°54′43.5″ W (NAD 1983), 1200 yards south of Point Breeze. • Date: July 5, 2013. • Time: 9:00 p.m.–10:30 p.m.
10. America's Birthday, Liberty Island Safety Zone, 33 CFR 165.160(2.1).	• Launch site: A barge launch located in approximate position 40°41′16.5″ N, 074°02′23″ W (NAD 1983), located in Federal Anchorage 20–C, about 360 yards east of Liberty Island. • Date: July 6, 2013. • Time: 9:10 p.m.–10:20 p.m.
11. Marist College OACAC Fireworks, Poughkeepsie, NY, Safety Zone, 33 CFR 165.160(5.13).	• Launch site: A barge launch located in approximate position 41°42′24.50″ N, 073°56′44.16″ W (NAD 1983), approximately 420 yards north of the Mid Hudson Bridge. • Date: July 11, 2013. • Time: 8:30 p.m.–10:00 p.m.

Under the provisions of 33 CFR 165.160, a vessel may not enter the regulated area unless given express permission from the COTP or the designated representative. Spectator vessels may transit outside the regulated area but may not anchor, block, loiter in, or impede the transit of other vessels. The Coast Guard may be assisted by other Federal, State, or local law enforcement agencies in enforcing this regulation.

This notice is issued under authority of 33 CFR 165.160(a) and 5 U.S.C. 552 (a). In addition to this notice in the **Federal Register**, the Coast Guard will provide mariners with advanced notification of enforcement periods via the Local Notice to Mariners and marine information broadcasts. If the COTP determines that the regulated area need not be enforced for the full duration stated in this notice, a Broadcast Notice to Mariners may be used to grant general permission to enter the regulated area.

Dated: April 10, 2013.

G. Loebl,

Captain, U.S. Coast Guard, Captain of the Port New York.

[FR Doc. 2013–09608 Filed 4–23–13; 8:45 am]

BILLING CODE 9110–04–P

DEPARTMENT OF HOMELAND SECURITY

Coast Guard

33 CFR Part 165

[Docket No. USCG–2013–0200]

RIN 1625–AA00

Safety Zone; 12th Annual Saltwater Classic; Port Canaveral Harbor; Port Canaveral, FL

AGENCY: Coast Guard, DHS.

ACTION: Temporary final rule.

SUMMARY: The Coast Guard is establishing a temporary safety zone on the waters of the Port Canaveral Harbor in Port Canaveral, Florida during the 12th Annual Saltwater Classic. The event is scheduled to take place on Saturday, April 27, 2013. This temporary safety zone is necessary for the safety of participant vessels, spectators, and the general public during the event. Persons and vessels are prohibited from entering, transiting through, anchoring in, or remaining within the safety zone unless authorized by the Captain of the Port Jacksonville or a designated representative.

DATES: This rule is effective from 2 p.m. to 6 p.m. on April 27, 2013.

ADDRESSES: Documents mentioned in this preamble are part of docket USCG–2013–0200. To view documents mentioned in this preamble as being available in the docket, go to *http://www.regulations.gov*, type the docket number in the ''SEARCH'' box and click ''SEARCH.'' Click on Open Docket Folder on the line associated with this rulemaking. You may also visit the Docket Management Facility in Room W12–140 on the ground floor of the Department of Transportation West Building, 1200 New Jersey Avenue SE., Washington, DC 20590, between 9 a.m. and 5 p.m., Monday through Friday, except Federal holidays.

FOR FURTHER INFORMATION CONTACT: If you have questions on this rule, call or email Lieutenant Commander Robert Butts, Sector Jacksonville Office of Waterways Management, U.S. Coast Guard; telephone (904) 564–7563, email *Robert.S.Butts@uscg.mil.* If you have questions on viewing or submitting material to the docket, call Barbara Hairston, Program Manager, Docket Operations, telephone (202) 366–9826.

SUPPLEMENTARY INFORMATION:

Table of Acronyms

DHS Department of Homeland Security
FR Federal Register
NPRM Notice of Proposed Rulemaking

A. Regulatory History and Information

The Coast Guard is issuing this final rule without prior notice and opportunity to comment pursuant to authority under section 4(a) of the Administrative Procedure Act (APA) (5 U.S.C. 553(b)). This provision authorizes an agency to issue a rule without prior notice and opportunity to comment when the agency for good cause finds that those procedures are ''impracticable, unnecessary, or contrary to the public interest.'' Under 5 U.S.C. 553(b)(B), the Coast Guard finds that good cause exists for not publishing a notice of proposed rulemaking (NPRM) with respect to this rule because it is impracticable. The needs of this event were not determined until March 20, 2013, leaving insufficient time to undertake notice and comment. Approximately 750 vessels may participate in the fishing tournament, resulting in heavy vessel traffic within Port Canaveral Harbor. This event will occur on April 27, 2013, and temporary final rule is necessary to ensure the safety of life and vessels during the 12th Annual Saltwater Classic.

For the same reason discussed above, under 5 U.S.C. 553(d)(3), the Coast Guard finds that good cause exists for making this rule effective less than 30 days after publication in the **Federal Register** because it is impracticable and contrary to the public interest to delay this rule.

B. Basis and Purpose

The legal basis for the rule is the Coast Guard's authority to establish regulated navigation areas and other limited access areas: 33 U.S.C. 1231; 46 U.S.C. Chapter 701, 3306, 3703; 50 U.S.C. 191, 195; 33 CFR 1.05–1, 6.04–1, 6.04–6, 160.5; Pub. L. 107–295, 116 Stat. 2064; Department of Homeland Security Delegation No. 0170.1.

The purpose of the rule is to ensure the safety of life and vessels on a navigable waterway of the United States during the 12th Annual Saltwater Classic.

On April 27, 2013, the Cox Events Group and K92.3–FM will host a fishing tournament offshore of Port Canaveral, FL. This temporary final rule establishes a safety zone in parts of Port Canaveral Harbor. Approximately 750 vessels may participate in the fishing tournament, resulting in heavy vessel traffic within Port Canaveral Harbor. This safety zone extends approximately 1100 yards west from Freddie Patrick Park and extends to the north 90 yards from the shoreline.

C. Discussion of the Final Rule

The safety zone is necessary to protect the tournament participants as well as other commercial traffic and the general public from traffic congestion associated with the tournament weigh-in. The safety zone will be enforced from 2 p.m. until 6 p.m. on April 27, 2013.

All persons and vessels not participating in the tournament weigh-in are prohibited from entering, transiting though, anchoring in, or remaining within the safety zone, unless authorized by the Captain of the Port Jacksonville or a designated representative. Persons and vessels may request authorization to enter, transit through, anchor in, or remain within the safety zone by contacting the Captain of the Port Jacksonville by telephone at (904) 564–7511, or a designated representative via VHF radio on channel 16, to request authorization. If authorization to enter, transit through, anchor in, or remain within the event area is granted by the Captain of the Port Jacksonville or a designated representative, all persons and vessels receiving such authorization must comply with the instructions of the Captain of the Port Jacksonville or a designated representative. The Coast Guard will provide notice of the safety zone by Local Notice to Mariners, Broadcast Notice to Mariners, and on-scene designated representative.

D. Regulatory Analyses

We developed this rule after considering numerous statutes and executive orders related to rulemaking. Below we summarize our analyses based on these statutes and executive orders.

1. Regulatory Planning and Review

This rule is not a significant regulatory action under section 3(f) of Executive Order 12866, Regulatory Planning and Review, as supplemented by Executive Order 13563, Improving Regulation and Regulatory Review, and does not require an assessment of potential costs and benefits under section 6(a)(3) of Executive Order 12866 or under section 1 of Executive Order 13563. The Office of Management and Budget has not reviewed it under those Orders.

The economic impact of this rule is not significant for the following reasons: (1) The safety zone will be enforced for only four hours for one day; (2) although persons and vessels not participating in the event will not be able to enter the safety zone without authorization from the Captain of the Port Jacksonville or a designated representative, they may operate in the surrounding area during the enforcement periods; (3) persons and vessels may still enter the event area during the enforcement period if authorized by the Captain of the Port Jacksonville or a designated representative; and (4) the Coast Guard will provide advance notification of the safety zone to the local maritime community by Local Notice to Mariners and Broadcast Notice to Mariners.

2. Impact on Small Entities

The Regulatory Flexibility Act of 1980 (RFA), 5 U.S.C. 601–612, as amended, requires federal agencies to consider the potential impact of regulations on small entities during rulemaking. The term ''small entities'' comprises small businesses, not-for-profit organizations that are independently owned and operated and are not dominant in their fields, and governmental jurisdictions with populations of less than 50,000. The Coast Guard certifies under 5 U.S.C. 605(b) that this rule will not have a significant economic impact on a substantial number of small entities.

This rule may affect the following entities, some of which may be small entities: the owners or operators of vessels intending to enter, transit through, anchor in, or remain within that portion of the Port Canaveral Harbor encompassed within the safety zone from 2 p.m. until 6 p.m., on April 27, 2013.

For the reasons discussed in the Regulatory Planning and Review section above, this rule will not have a significant economic impact on a substantial number of small entities.

3. Assistance for Small Entities

Under section 213(a) of the Small Business Regulatory Enforcement Fairness Act of 1996 (Pub. L. 104–121), we want to assist small entities in understanding this rule. If the rule would affect your small business, organization, or governmental jurisdiction and you have questions concerning its provisions or options for compliance, please contact the person listed in the **FOR FURTHER INFORMATION CONTACT**, above.

Small businesses may send comments on the actions of Federal employees who enforce, or otherwise determine compliance with, Federal regulations to the Small Business and Agriculture Regulatory Enforcement Ombudsman and the Regional Small Business Regulatory Fairness Boards. The Ombudsman evaluates these actions annually and rates each agency's responsiveness to small business. If you wish to comment on actions by employees of the Coast Guard, call 1–888–REG–FAIR (1–888–734–3247). The Coast Guard will not retaliate against small entities that question or complain about this rule or any policy or action of the Coast Guard.

4. Collection of Information

This rule will not call for a new collection of information under the Paperwork Reduction Act of 1995 (44 U.S.C. 3501–3520).

5. Federalism

A rule has implications for federalism under Executive Order 13132, Federalism, if it has a substantial direct effect on the States, on the relationship between the national government and the States, or on the distribution of power and responsibilities among the various levels of government. We have analyzed this rule under that Order and determined that this rule does not have implications for federalism.

6. Protest Activities

The Coast Guard respects the First Amendment rights of protesters. Protesters are asked to contact the person listed in the **FOR FURTHER INFORMATION CONTACT** section to coordinate protest activities so that your message can be received without jeopardizing the safety or security of people, places or vessels.

7. Unfunded Mandates Reform Act

The Unfunded Mandates Reform Act of 1995 (2 U.S.C. 1531–1538) requires Federal agencies to assess the effects of their discretionary regulatory actions. In particular, the Act addresses actions that may result in the expenditure by a State, local, or tribal government, in the aggregate, or by the private sector of $100,000,000 (adjusted for inflation) or more in any one year. Though this rule will not result in such expenditure, we do discuss the effects of this rule elsewhere in this preamble.

8. Taking of Private Property

This rule will not cause a taking of private property or otherwise have taking implications under Executive Order 12630, Governmental Actions and Interference with Constitutionally Protected Property Rights.

9. Civil Justice Reform

This rule meets applicable standards in sections 3(a) and 3(b)(2) of Executive Order 12988, Civil Justice Reform, to minimize litigation, eliminate ambiguity, and reduce burden.

10. Protection of Children

We have analyzed this rule under Executive Order 13045, Protection of Children from Environmental Health Risks and Safety Risks. This rule is not an economically significant rule and does not create an environmental risk to health or risk to safety that may disproportionately affect children.

11. Indian Tribal Governments

This rule does not have tribal implications under Executive Order 13175, Consultation and Coordination with Indian Tribal Governments, because it does not have a substantial direct effect on one or more Indian tribes, on the relationship between the Federal Government and Indian tribes, or on the distribution of power and responsibilities between the Federal Government and Indian tribes.

12. Energy Effects

This action is not a ''significant energy action'' under Executive Order 13211, Actions Concerning Regulations That Significantly Affect Energy Supply, Distribution, or Use.

13. Technical Standards

This rule does not use technical standards. Therefore, we did not consider the use of voluntary consensus standards.

14. Environment

We have analyzed this rule under Department of Homeland Security

Management Directive 023–01 and Commandant Instruction M16475.lD, which guide the Coast Guard in complying with the National Environmental Policy Act of 1969 (NEPA) (42 U.S.C. 4321–4370f), and have determined that this action is one of a category of actions that do not individually or cumulatively have a significant effect on the human environment. This rule involves establishing a temporary safety zone that will be enforced for a total of four hours. This rule is categorically excluded from further review under paragraph 34(g) of Figure 2–1 of the Commandant Instruction. An environmental analysis checklist supporting this determination and a Categorical Exclusion Determination are available in the docket where indicated under **ADDRESSES**.

List of Subjects in 33 CFR Part 165

Harbors, Marine safety, Navigation (water), Reporting and recordkeeping requirements, Security measures, Waterways.

For the reasons discussed in the preamble, the Coast Guard amends 33 CFR part 165 as follows:

PART 165—REGULATED NAVIGATION AREAS AND LIMITED ACCESS AREAS

■ 1. The authority citation for part 165 continues to read as follows:

Authority: 33 U.S.C. 1231; 46 U.S.C. Chapter 701, 3306, 3703; 50 U.S.C. 191, 195; 33 CFR 1.05–1, 6.04–1, 6.04–6, 160.5; Pub. L. 107–295, 116 Stat. 2064; Department of Homeland Security Delegation No. 0170.1.

■ 2. Add § 165.T07–0200 to read as follows:

§ 165.T07–0200 Safety Zone; 12th Annual Saltwater Classic, Port Canaveral Harbor; Port Canaveral, FL.

(a) *Regulated Area.* The following regulated area is a safety zone. All waters within the following points: starting at Point 1 in position 28°24′32″ N, 080°37′22″ W, then north to Point 2 28°24′35″ N, 080°37′22″ W, then due east to Point 3 at 28°24′35″ N, 080°36′45″ W, then south to Point 4 at 28°24′32″ N, 080°36′45″, then west back to the original point.

(b) *Definition.* The term ''designated representative'' means Coast Guard Patrol Commanders, including Coast Guard coxswains, petty officers, and other officers operating Coast Guard vessels, and Federal, state, and local officers designated by or assisting the Captain of the Port Jacksonville in the enforcement of the regulated area.

(c) *Regulations.*

(1) All persons and vessels not participating in the 12th Annual Saltwater Classic are prohibited from entering, transiting through, anchoring in, or remaining within the regulated area unless authorized by the Captain of the Port Jacksonville or a designated representative.

(2) Persons and vessels who are not participating in the 12th Annual Saltwater Classic who desire to enter, transit through, anchor in, or remain within the regulated area may contact the Captain of the Port Jacksonville by telephone at (904) 564–7511, or a designated representative via VHF radio on channel 16, to request authorization. If authorization to enter, transit through, anchor in, or remain within the regulated area is granted by the Captain of the Port Jacksonville or a designated representative, all persons and vessels receiving such authorization must comply with the instructions of the Captain of the Port Jacksonville or a designated representative.

(3) The Coast Guard will provide notice of the regulated area by Local Notice to Mariners, Broadcast Notice to Mariners, and on-scene designated representatives.

(d) *Enforcement Period.* This rule is will be enforced from 2 p.m. to 6 p.m. on April 27, 2013.

Dated: April 16, 2013.

T.G. Allan, Jr.,

Captain, U.S. Coast Guard, Captain of the Port Jacksonville.

[FR Doc. 2013–09709 Filed 4–23–13; 8:45 am]

BILLING CODE 9110–04–P

DEPARTMENT OF HOMELAND SECURITY

Coast Guard

33 CFR Part 165

[Docket Number USCG–2013–0259]

RIN 1625–AA00

Safety Zone; Pasquotank River; Elizabeth City, NC

AGENCY: Coast Guard, DHS.

ACTION: Temporary final rule.

SUMMARY: The Coast Guard is establishing a safety zone on the navigable waters of the Pasquotank River in Elizabeth City, NC in support of the Fireworks display for the Potato Festival. This action is necessary to protect the life and property of the maritime public and spectators from the hazards posed by aerial fireworks displays. Entry into or movement within this safety zone during the enforcement period is prohibited without approval of the Captain of the Port.

DATES: This rule is effective on May 18, 2013 and enforced from 8 p.m. to 11 p.m. on May 18, 2013.

ADDRESSES: Documents mentioned in this preamble are part of docket [USCG–2013–0259]. To view documents mentioned in this preamble as being available in the docket, go to *http://www.regulations.gov,* type the docket number in the ''SEARCH'' box and click ''SEARCH.'' Click on Open Docket Folder on the line associated with this rulemaking. You may also visit the Docket Management Facility in Room W12–140 on the ground floor of the Department of Transportation West Building, 1200 New Jersey Avenue SE., Washington, DC 20590, between 9 a.m. and 5 p.m., Monday through Friday, except Federal holidays.

FOR FURTHER INFORMATION CONTACT: If you have questions on this rule, call or email BOSN4 Joseph M. Edge, Coast Guard Sector North Carolina, Coast Guard; telephone 252–247–4525, email Joseph.M.Edge@uscg.mil. If you have questions on viewing or submitting material to the docket, call Barbara Hairston, Program Manager, Docket Operations, telephone (202) 366–9826.

SUPPLEMENTARY INFORMATION:

Table of Acronyms

DHS Department of Homeland Security
FR Federal Register
NPRM Notice of Proposed Rulemaking

A. Regulatory History and Information

The Coast Guard is issuing this temporary final rule without prior notice and opportunity to comment pursuant to authority under section 4(a) of the Administrative Procedure Act (APA) (5 U.S.C. 553(b)). This provision authorizes an agency to issue a rule without prior notice and opportunity to comment when the agency for good cause finds that those procedures are ''impracticable, unnecessary, or contrary to the public interest.'' Under 5 U.S.C. 553(b)(B), the Coast Guard finds that good cause exists for not publishing a notice of proposed rulemaking (NPRM) with respect to this rule because the final details for this event were not provided to the Coast Guard until April 10, 2013. As such, it is impracticable to provide a full comment period due to lack of time. Delaying the effective date for comment would be contrary to the public interest, since immediate action is needed to ensure the safety of the event participants, patrol vessels, spectator craft and other vessels transiting the event area. The Coast Guard will provide advance

notifications to users of the effected waterways of the safety zone via marine information broadcasts, local notice to mariners, commercial radio stations and area newspapers.

B. Basis and Purpose

On May 18, 2013, the NC Potato Festival will sponsor a fireworks display from a barge anchored in the Pasquotank River at latitude 36°17′47″ N longitude 076°12′17″ W. The fireworks debris fallout area will extend over the navigable waters of Cape Fear River. Due to the need to protect mariners and spectators from the hazards associated with the fireworks display, including accidental discharge of fireworks, dangerous projectiles, and falling hot embers or other debris, vessel traffic will be temporarily restricted from transiting within fireworks launch and fallout area.

C. Discussion of the Final Rule

The Coast Guard is establishing a safety zone on the navigable waters of Pasquotank River in Elizabeth City, NC. The regulated area of this safety zone includes all water of the Pasquotank River within a 300 yards radius of latitude 36°17′47″ N longitude 076°12′17″ W.

This safety zone will be established and enforced from 8 p.m. to 11 p.m. on May 18, 2013. In the interest of public safety, general navigation within the safety zone will be restricted during the specified date and times. Except for participants and vessels authorized by the Coast Guard Captain of the Port or his representative, no person or vessel may enter or remain in the regulated area.

D. Regulatory Analyses

We developed this rule after considering numerous statutes and executive orders related to rulemaking. Below we summarize our analyses based on these statutes and executive orders.

1. Regulatory Planning and Review

This rule is not a significant regulatory action under section 3(f) of Executive Order 12866, Regulatory Planning and Review, as supplemented by Executive Order 13563, Improving Regulation and Regulatory Review, and does not require an assessment of potential costs and benefits under section 6(a)(3) of Executive Order 12866 or under section 1 of Executive Order 13563. The Office of Management and Budget has not reviewed it under those Orders. Although this regulation restricts access to a small segment of the Pasquotank River, the effect of this rule will not be significant because: (i) The safety zone will be in effect for a limited duration; (ii) the zone is of limited size; and (iii) the Coast Guard will make notifications via maritime advisories so mariners can adjust their plans accordingly. Impact on Small Entities

2. Impact on Small Entities

The Regulatory Flexibility Act of 1980 (RFA), 5 U.S.C. 601–612, as amended, requires federal agencies to consider the potential impact of regulations on small entities during rulemaking. The term ''small entities'' comprises small businesses, not-for-profit organizations that are independently owned and operated and are not dominant in their fields, and governmental jurisdictions with populations of less than 50,000. The Coast Guard certifies under 5 U.S.C. 605(b) that this rule will not have a significant economic impact on a substantial number of small entities. This rule would affect the following entities, some of which might be small entities: The owners or operators of vessels intending to transit or anchor in the Pasquotank River where fireworks events are being held. This regulation will not have a significant impact on a substantial number of small entities because it will be enforced only during the fireworks display event that has been permitted by the Coast Guard Captain of the Port. The Captain of the Port will ensure that small entities are able to operate in the regulated area when it is safe to do so. In some cases, vessels will be able to safely transit around the regulated area at various times, and, with the permission of the Patrol Commander, vessels may transit through the regulated area. Before the enforcement period, the Coast Guard will issue maritime advisories so mariners can adjust their plans accordingly.

3. Assistance for Small Entities

Under section 213(a) of the Small Business Regulatory Enforcement Fairness Act of 1996 (Pub. L. 104–121), we want to assist small entities in understanding this rule. If the rule would affect your small business, organization, or governmental jurisdiction and you have questions concerning its provisions or options for compliance, please contact the person listed in the **FOR FURTHER INFORMATION CONTACT**, above.

Small businesses may send comments on the actions of Federal employees who enforce, or otherwise determine compliance with, Federal regulations to the Small Business and Agriculture Regulatory Enforcement Ombudsman and the Regional Small Business Regulatory Fairness Boards. The Ombudsman evaluates these actions annually and rates each agency's responsiveness to small business. If you wish to comment on actions by employees of the Coast Guard, call 1–888–REG–FAIR (1–888–734–3247). The Coast Guard will not retaliate against small entities that question or complain about this rule or any policy or action of the Coast Guard.

4. Collection of Information

This rule will not call for a new collection of information under the Paperwork Reduction Act of 1995 (44 U.S.C. 3501–3520).

5. Federalism

A rule has implications for federalism under Executive Order 13132, Federalism, if it has a substantial direct effect on the States, on the relationship between the national government and the States, or on the distribution of power and responsibilities among the various levels of government. We have analyzed this rule under that Order and determined that this rule does not have implications for federalism.

6. Protest Activities

The Coast Guard respects the First Amendment rights of protesters. Protesters are asked to contact the person listed in the **FOR FURTHER INFORMATION CONTACT** section to coordinate protest activities so that your message can be received without jeopardizing the safety or security of people, places or vessels.

7. Unfunded Mandates Reform Act

The Unfunded Mandates Reform Act of 1995 (2 U.S.C. 1531–1538) requires Federal agencies to assess the effects of their discretionary regulatory actions. In particular, the Act addresses actions that may result in the expenditure by a State, local, or tribal government, in the aggregate, or by the private sector of $100,000,000 (adjusted for inflation) or more in any one year. Though this rule will not result in such an expenditure, we do discuss the effects of this rule elsewhere in this preamble.

8. Taking of Private Property

This rule will not cause a taking of private property or otherwise have taking implications under Executive Order 12630, Governmental Actions and Interference with Constitutionally Protected Property Rights.

9. Civil Justice Reform

This rule meets applicable standards in sections 3(a) and 3(b)(2) of Executive Order 12988, Civil Justice Reform, to

minimize litigation, eliminate ambiguity, and reduce burden.

10. Protection of Children

We have analyzed this rule under Executive Order 13045, Protection of Children from Environmental Health Risks and Safety Risks. This rule is not an economically significant rule and does not create an environmental risk to health or risk to safety that may disproportionately affect children.

11. Indian Tribal Governments

This rule does not have tribal implications under Executive Order 13175, Consultation and Coordination with Indian Tribal Governments, because it does not have a substantial direct effect on one or more Indian tribes, on the relationship between the Federal Government and Indian tribes, or on the distribution of power and responsibilities between the Federal Government and Indian tribes.

12. Energy Effects

This action is not a ''significant energy action'' under Executive Order 13211, Actions Concerning Regulations That Significantly Affect Energy Supply, Distribution, or Use.

13. Technical Standards

This rule does not use technical standards. Therefore, we did not consider the use of voluntary consensus standards.

14. Environment

We have analyzed this rule under Department of Homeland Security Management Directive 023–01 and Commandant Instruction M16475.lD, which guide the Coast Guard in complying with the National Environmental Policy Act of 1969 (NEPA)(42 U.S.C. 4321–4370f), and have determined that this action is one of a category of actions that do not individually or cumulatively have a significant effect on the human environment. This rule involves establishing a safety zone for a fireworks display launch site and fallout area and is expected to have no impact on the water or environment. This zone is designed to protect mariners and spectators from the hazards associated with aerial fireworks displays. This rule is categorically excluded from further review under paragraph 34 (g) of Figure 2–1 of the Commandant Instruction. An environmental analysis checklist supporting this determination and a Categorical Exclusion Determination are available in the docket where indicated under **ADDRESSES**. We seek any comments or information that may lead to the discovery of a significant environmental impact from this rule.

List of Subjects in 33 CFR Part 165

Harbors, Marine safety, Navigation (water), Reporting and recordkeeping requirements, Security measures, and Waterways.

For the reasons discussed in the preamble, the Coast Guard amends 33 CFR part 165 as follows:

PART 165—REGULATED NAVIGATION AREAS AND LIMITED ACCESS AREAS

■ 1. The authority citation for part 165 continues to read as follows:

Authority: 33 U.S.C. 1231; 46 U.S.C. Chapter 701, 3306, 3703; 50 U.S.C. 191, 195; 33 CFR 1.05–1, 6.04–1, 6.04–6, 160.5; Pub. L. 107–295, 116 Stat. 2064; Department of Homeland Security Delegation No. 0170.1.

■ 2. Add temporary § 165.T05–0259 to read as follows:

§ 165.T05–0259 Safety Zone; Pasquotank River; Elizabeth City, NC.

(a) *Definitions.* For the purposes of this section, Captain of the Port means the Commander, Sector North Carolina.

Representative means any Coast Guard commissioned, warrant, or petty officer who has been authorized to act on the behalf of the Captain of the Port.

(b) *Location.* The following area is a safety zone: Specified waters of the Captain of the Port, Sector North Carolina, as defined in 33 CFR 3.25–20, all waters of the Pasquotank River within a 300 yard radius of the fireworks launch barge in approximate position latitude 36°17′47″ N longitude 076°12′17″, located near Machelhe Island.

(c) *Regulations.* (1) The general regulations contained in § 165.23 of this part apply to the area described in paragraph (b) of this section.

(2) Persons or vessels requiring entry into or passage through any portion of the safety zone must first request authorization from the Captain of the Port, or a designated representative, unless the Captain of the Port previously announced via Marine Safety Radio Broadcast on VHF Marine Band Radio channel 22 (157.1 MHz) that this regulation will not be enforced in that portion of the safety zone. The Captain of the Port can be contacted at telephone number (910) 343–3882 or by radio on VHF Marine Band Radio, channels 13 and 16.

(d) *Enforcement.* The U.S. Coast Guard may be assisted in the patrol and enforcement of the zone by Federal, State, and local agencies.

(e) *Enforcement period.* This section will be enforced on May 18, 2013 from 8 p.m. to 11 p.m. unless cancelled earlier by the Captain of the Port.

Dated: April 12, 2013.

A. Popiel,

Captain, U.S. Coast Guard, Captain of the Sector North Carolina.

[FR Doc. 2013–09609 Filed 4–23–13; 8:45 am]

BILLING CODE 9110–04–P

ENVIRONMENTAL PROTECTION AGENCY

40 CFR Parts 60 and 63

[EPA–HQ–OAR–2009–0234; EPA–HQ–OAR–2011–0044; FRL–9789–5]

RIN 2060–AR62

Reconsideration of Certain New Source Issues: National Emission Standards for Hazardous Air Pollutants From Coal- and Oil-Fired Electric Utility Steam Generating Units and Standards of Performance for Fossil-Fuel-Fired Electric Utility, Industrial-Commercial-Institutional, and Small Industrial-Commercial-Institutional Steam Generating Units

AGENCY: Environmental Protection Agency (EPA).

ACTION: Final rule; notice of final action on reconsideration.

SUMMARY: The EPA is taking final action on its reconsideration of certain issues in the final rules titled, ''National Emission Standards for Hazardous Air Pollutants from Coal- and Oil-fired Electric Utility Steam Generating Units and Standards of Performance for Fossil-Fuel-Fired Electric Utility, Industrial-Commercial-Institutional, and Small Industrial-Commercial-Institutional Steam Generating Units.'' The National Emission Standards for Hazardous Air Pollutants (NESHAP) rule issued pursuant to Clean Air Act (CAA) section 112 is referred to as the Mercury and Air Toxics Standards (MATS) NESHAP, and the New Source Performance Standards rule issued pursuant to CAA section 111 is referred to as the Utility NSPS. The Administrator received petitions for reconsideration of certain aspects of the MATS NESHAP and the Utility NSPS.

On November 30, 2012, the EPA granted reconsideration of, proposed, and requested comment on a limited set of issues. We also proposed certain technical corrections to both the MATS NESHAP and the Utility NSPS. The EPA is now taking final action on the revised new source numerical standards in the MATS NESHAP and the definitional and monitoring provisions in the Utility NSPS that were addressed in the

proposed reconsideration rule. As part of this action, the EPA is also making certain technical corrections to both the MATS NESHAP and the Utility NSPS. The EPA is not taking final action on requirements applicable during periods of startup and shutdown in the MATS NESHAP or on startup and shutdown provisions related to the PM standard in the Utility NSPS.

DATES: The effective date of the rule is April 24, 2013.

Docket. The EPA established two dockets for this action: Docket ID EPA–HQ–OAR–2011–0044 (NSPS action) and Docket ID EPA–HQ–OAR–2009–0234 (MATS NESHAP action). All documents in the dockets are listed in the *http://www.regulations.gov* index. Although listed in the index, some information is not publicly available (e.g., confidential business information (CBI) or other information whose disclosure is restricted by statute). Certain other material, such as copyrighted material, will be publicly available only in hard copy form. Publicly available docket materials are available either electronically in *http://www.regulations.gov* or in hard copy at the EPA Docket Center, Room 3334, 1301 Constitution Avenue NW., Washington, DC. The Public Reading Room is open from 8:30 a.m. to 4:30 p.m., Monday through Friday, excluding legal holidays. The telephone number for the Public Reading Room is (202) 566–1744, and the telephone number for the Air Docket is (202) 566–1742.

FOR FURTHER INFORMATION CONTACT: For the MATS NESHAP action: Mr. William Maxwell, Energy Strategies Group, Sector Policies and Programs Division, (D243–01), Office of Air Quality Planning and Standards, U.S. Environmental Protection Agency, Research Triangle Park, North Carolina 27711; Telephone number: (919) 541–5430; Fax number (919) 541–5450; Email address: *maxwell.bill@epa.gov.* For the NSPS action: Mr. Christian Fellner, Energy Strategies Group, Sector Policies and Programs Division, (D243–01), Office of Air Quality Planning and Standards, U.S. Environmental Protection Agency, Research Triangle Park, North Carolina 27711; Telephone number: (919) 541–4003; Fax number (919) 541–5450; Email address: *fellner.christian@epa.gov.*

SUPPLEMENTARY INFORMATION:

Outline. The information presented in this preamble is organized as follows:

I. General Information
A. Does this action apply to me?
B. How do I obtain a copy of this document?
C. Judicial Review
II. Background
III. Summary of Today's Action
IV. Summary of Final Action and Changes Since Proposal—MATS NESHAP New Source Issues
V. Summary of Final Action and Changes Since Proposal—Utility NSPS
VI. Technical Corrections and Clarifications
VII. Impacts of This Final Rule
A. Summary of Emissions Impacts, Costs and Benefits
B. What are the air impacts?
C. What are the energy impacts?
D. What are the compliance costs?
E. What are the economic and employment impacts?
F. What are the benefits of the final standards?
VIII. Statutory and Executive Order Reviews
A. Executive Order 12866: Regulatory Planning and Review and Executive Order 13563: Improving Regulation and Regulatory Review
B. Paperwork Reduction Act
C. Regulatory Flexibility Act
D. Unfunded Mandates Reform Act
E. Executive Order 13132: Federalism
F. Executive Order 13175: Consultation and Coordination With Indian Tribal Governments
G. Executive Order 13045: Protection of Children From Environmental Health Risks and Safety Risks
H. Executive Order 13211: Actions That Significantly Affect Energy Supply, Distribution, or Use
I. National Technology Transfer and Advancement Act
J. Executive Order 12898: Federal Actions To Address Environmental Justice in Minority Populations and Low-Income Populations
K. Congressional Review Act

I. General Information

A. Does this action apply to me?

Categories and entities potentially affected by today's action include:

Category	NAICS code[1]	Examples of potentially regulated entities
Industry	221112	Fossil fuel-fired electric utility steam generating units.
Federal government	[2] 221122	Fossil fuel-fired electric utility steam generating units owned by the Federal government.
State/local/Tribal government	[2] 221122	Fossil fuel-fired electric utility steam generating units owned by municipalities.
	921150	Fossil fuel-fired electric utility steam generating units in Indian country.

[1] North American Industry Classification System.
[2] Federal, State, or local government-owned and operated establishments are classified according to the activity in which they are engaged.

This table is not intended to be exhaustive but rather to provide a guide for readers regarding entities likely to be affected by this action. To determine whether your facility, company, business, organization, etc. would be regulated by this action, you should examine the applicability criteria in 40 CFR 60.40, 60.40Da, or 60.40c or in 40 CFR 63.9982. If you have any questions regarding the applicability of this action to a particular entity, consult either the air permitting authority for the entity or your EPA regional representative as listed in 40 CFR 60.4 or 40 CFR 63.13 (General Provisions).

B. How do I obtain a copy of this document?

In addition to being available in the docket, electronic copies of these final rules will be available on the Worldwide Web (WWW) through the Technology Transfer Network (TTN). Following signature, a copy of the action will be posted on the TTN's policy and guidance page for newly proposed or promulgated rules at the following address: *http://www.epa.gov/ttn/oarpg/.* The TTN provides information and technology exchange in various areas of air pollution control.

C. Judicial Review

Under the CAA section 307(b)(1), judicial review of this final rule is available only by filing a petition for review in the U.S. Court of Appeals for the District of Columbia Circuit by June 24, 2013. Under CAA section 307(d)(7)(B), only an objection to this final rule that was raised with reasonable specificity during the period for public comment can be raised during judicial review. Note, under CAA section 307(b)(2), the requirements established by this final rule may not be challenged separately in any civil or criminal proceedings brought by the EPA to enforce these requirements.

II. Background

The final MATS NESHAP and the Utility NSPS rules were published in the **Federal Register** at 77 FR 9304 on

February 16, 2012. Following promulgation of the final rules, the Administrator received petitions for reconsideration of numerous provisions of both the MATS NESHAP and the Utility NSPS pursuant to CAA section 307(d)(7)(B). Copies of the MATS NESHAP petitions are provided in rulemaking docket EPA–HQ–OAR–2009–0234. Copies of the Utility NSPS petitions are provided in rulemaking docket EPA–HQ–OAR–2011–0044. On November 30, 2012, the proposal granting reconsideration of certain issues in the MATS NESHAP and Utility NSPS was published in the **Federal Register** at 77 FR 71323.

III. Summary of Today's Action

This final action amends certain provisions of the final rule issued by the EPA on February 16, 2012. Through an August 2, 2012, notice (77 FR 45967), the EPA delayed the effective date of the February 2012 MATS rule for new sources only. That stay was limited to 90 days and has since expired. The February 2012 final rule is and remains in effect for all sources.

The November 30, 2012, proposed reconsideration rule proposed: (1) Certain revised new source numerical standards in the MATS NESHAP, (2) requirements applicable during periods of startup and shutdown in the MATS NESHAP, (3) startup and shutdown provisions related to the particulate matter (PM) standard in the Utility NSPS, and (4) definitional and monitoring provisions in the Utility NSPS. We also proposed certain technical corrections to both the MATS NESHAP and the Utility NSPS. We are taking final action today on the revised numerical new source MATS NESHAP limits, the definitional and monitoring issues in the Utility NSPS, and all of the technical corrections not related to startup/shutdown issues.

This summary of the final rule reflects the changes to 40 CFR Part 63, subpart UUUUU, and 40 CFR Part 60, subpart Da (77 FR 9304; February 16, 2012) made in this regard.

As noted above, in the proposed reconsideration rule, the EPA took comment on the requirements in the MATS NESHAP applicable during startup and shutdown, including the definitions of startup and shutdown. The EPA also took comment on the startup and shutdown provisions relating to the PM standard in the Utility NSPS. The EPA received considerable comments regarding these startup and shutdown provisions, including data and information relevant to the proposed work practice standard that applies in such periods. The EPA is not taking final action on the startup and shutdown provisions at this time as it needs additional time to consider and evaluate the comments and data provided.[1] The Agency is currently reviewing all of the comments received on the startup and shutdown issues and intends to act promptly to address these issues. We note that no existing sources will have to comply with the existing source MATS standards before April 16, 2015. Further, no new sources are currently under construction and it takes years to complete construction. 77 FR 71330, fn. 7. As such, there will be sufficient time for the Agency to review the comments submitted concerning the proposed startup and shutdown provisions and take appropriate action well in advance of any new source being subject to those provisions.

As described below, on the basis of information provided since the reconsideration proposal, today's action revises certain new source numerical limits in the MATS NESHAP. Specifically, the EPA is finalizing revised hydrogen chloride (HCl), filterable PM (fPM),[2] sulfur dioxide (SO_2), lead (Pb), and selenium emission limits for all new coal-fired EGUs; the mercury (Hg) emission limit for the ''unit designed for coal ≥ 8,300 Btu/lb subcategory;'' fPM and SO_2 emission limits for new solid oil-derived fuel-fired EGUs; fPM emission limits for new continental liquid oil-fired EGUs; and most of the emission limits for new integrated gasification combined cycle (IGCC) units.

The fPM, HCl, and Hg limits that we are finalizing in this action are provided in table 1; the alternate limits that we are finalizing are provided in table 2.[3]

TABLE 1—REVISED EMISSION LIMITATIONS FOR NEW EGUS

Subcategory	Filterable particulate matter, lb/MWh	Hydrogen chloride, lb/MWh	Mercury, lb/GWh
New—Unit not designed for low rank virgin coal	9.0E–2	1.0E–2 [a]	3.0E–3.
New—Unit designed for low rank virgin coal	9.0E–2	1.0E–2 [a]	NR.
New—IGCC	7.0E–2 [b] 9.0E–2 [c]	2.0E–3	3.0E–3.
New—Solid oil-derived	3.0E–2	NR	NR.
New—Liquid oil—continental	3.0E–1	NR	NR.

Note: lb/MWh = pounds pollutant per megawatt-hour electric output (gross).
lb/GWh = pounds pollutant per gigawatt-hour electric output (gross).
NR = limit not opened for reconsideration (77 FR 9304; February 16, 2012).
[a] Beyond-the-floor value.
[b] Duct burners on syngas; based on permit levels in comments received.
[c] Duct burners on natural gas; based on permit levels in comments received.

TABLE 2—REVISED ALTERNATE EMISSION LIMITATIONS FOR NEW EGUS

Subcategory/pollutant	Coal-fired EGUs	IGCC [a]	Solid oil-derived
SO_2	1.0 lb/MWh	4.0E–1 lb/MWh [b]	1.0 lb/MWh
Total non-mercury metals	NR	4.0E–1 lb/GWh	NR
Antimony, Sb	NR	2.0E–2 lb/GWh	NR
Arsenic, As	NR	2.0E–2 lb/GWh	NR

[1] The EPA is also still reviewing the other issues raised in the petitions for reconsideration and is not taking any action at this time with respect to those issues.

[2] As the final MATS rule established a filterable PM (fPM) limit, every reference in this preamble to a PM limit means filterable PM.

[3] The final rule included certain alternative limits (see 77 FR 9367–9369).

TABLE 2—REVISED ALTERNATE EMISSION LIMITATIONS FOR NEW EGUS—Continued

Subcategory/pollutant	Coal-fired EGUs	IGCC [a]	Solid oil-derived
Beryllium, Be	NR	1.0E–3 lb/GWh	NR
Cadmium, Cd	NR	2.0E–3 lb/GWh	NR
Chromium, Cr	NR	4.0E–2 lb/GWh	NR
Cobalt, Co	NR	4.0E–3 lb/GWh	NR
Lead, Pb	2.0E–2 lb/GWh	9.0E–3 lb/GWh	NR
Mercury, Hg	NA	NA	NR
Manganese, Mn	NR	2.0E–2 lb/GWh	NR
Nickel, Ni	NR	7.0E–2 lb/GWh	NR
Selenium, Se	5.0E–2 lb/GWh	3.0E–1 lb/GWh	NR

NA = not applicable.
NR = limit not opened for reconsideration (77 FR 9304; February 16, 2012).
[a] Based on best-performing similar source.
[b] Based on DOE information.

In addition, in the MATS NESHAP the EPA is removing quarterly stack testing as an option to demonstrate compliance with the new source fPM emission limits; revising the way in which an owner or operator of a new EGU who chooses to use PM continuous parameter monitoring systems (CPMS) establishes an operating limit; requiring inspections and retesting within 45 days of an exceedance of the operating limit for those new EGU owners or operators who choose to use PM CPMS as a compliance option; and finalizing the presumption of violation of the emissions limit if more than 4 emissions tests are required in a 12-month period.

The final changes to the numerical emissions limits noted above incorporate information about the variability of the best performing EGUs and more accurately reflect the capabilities of emission control equipment for new EGUs. The final changes should also address commenters' concerns that vendors of EGU emission controls had been unwilling to provide guarantees regarding the ability to meet all of the standards for new EGUs as originally finalized in February 2012.

We expect that source owners and operators will install and operate the same or similar control technologies to meet the revised standards in this reconsideration action as they would have chosen to comply with the standards in the February 2012 final rule. Consistent with CAA section 112(a)(4), we are maintaining the new source trigger date for the MATS NESHAP rule as May 3, 2011. See 77 FR 71330, fn. 7. New sources must comply with the revised MATS emission standards described in section IV below by April 24, 2013, or startup, whichever is later.

In the February 2012 final Utility NSPS rule, the EPA adopted a definition of natural gas that excludes coal-derived synthetic natural gas consistent with the definition in MATS. In the Utility NSPS reconsideration proposal, we re-proposed and requested comment on that definition. Based on review of the comments received in response to the reconsideration proposal, the EPA has concluded that the definition of natural gas in the final Utility NSPS is appropriate and, therefore, is not making any changes to that definition. We are also finalizing as proposed one conforming amendment and two amendments related to EGUs burning desulfurized coal-derived synthetic natural gas. First, we amended the definition of coal to make it clear that coal-derived synthetic natural gas is considered to be coal. In addition, in recognition of the fact that emissions from the burning of desulfurized coal-derived synthetic natural gas are very similar to those from the burning of natural gas, we amended the opacity and SO_2 monitoring provisions so that facilities burning desulfurized coal-derived synthetic natural gas will have opacity and SO_2 monitoring requirements similar to those of facilities burning natural gas. Further, we are finalizing certain revisions to the definition of IGCC in the Utility NSPS. We are also finalizing as proposed the revised procedures for calculating PM emission rates intended to make the Utility NSPS procedures consistent with those in the MATS NESHAP. We did not receive any adverse comments regarding this proposed change. Finally, we are finalizing as proposed the technical corrections to the PM standards for facilities that commenced construction before March 1, 2005, and for facilities that commence modification after May 3, 2011.

The impacts of today's revisions on the costs and the benefits of the final rule are minor. As noted above, we expect that source owners and operators will install and operate the same or similar control technologies to meet the revised standards in this action as they would have chosen to comply with the standards in the February 2012 final rule.

IV. Summary of Final Action and Changes Since Proposal—MATS NESHAP New Source Issues

After consideration of the public comments received, the EPA has made certain changes in this final action from the reconsideration proposal. We address the most significant comments in this preamble. However for a complete summary of the comments received on the issues we are finalizing today and our responses thereto, please refer to the memorandum ''National Emission Standards For Hazardous Air Pollutants From Coal- And Oil-Fired Electric Utility Steam Generating Units—Reconsideration; Summary Of Public Comments And Responses'' (March 2013) in rulemaking docket EPA–HQ–OAR–2009–0234.

In this action, we are finalizing certain new source emission limits for the MATS NESHAP, as discussed below.

1. Changes to Certain New Source MATS NESHAP Limits

Commenters noted that in two instances, Pb emissions from coal-fired EGUs and the fPM emissions from continental liquid oil-fired EGUs, the EPA had proposed new source emission limits that were less stringent than those in the final MATS NESHAP for the respective existing sources. This approach was inconsistent with that taken in the final MATS NESHAP.[4] Although CAA section 112(d)(3) allows existing source MACT floor limits to be less stringent than new source limits, the EPA interprets this provision as

[4] See ''*National Emission Standards for Hazardous Air Pollutants (NESHAP) Maximum Achievable Control Technology (MACT) Floor Analysis for Coal- and Oil-fired Electric Utility Steam Generating Units for Final Rule,*'' Docket ID EPA–HQ–OAR–2009–0234–20132, p. 13.

precluding new source limits from being less stringent than existing source limits. See CAA section 112(d)(3). Thus, for Pb emissions from coal-fired EGUs and fPM emissions from continental liquid oil-fired EGUs, the EPA is finalizing new source limits that are equivalent to the final existing-source limits.

Next, commenters noted that when evaluating SO_2 emissions data from coal-fired EGUs, the EPA had not selected the lowest emitting source upon which to base the emission limit and that its rationale for excluding certain data was unlawful and arbitrary. Although the EPA disagrees with commenters on several of the excluded data sets (i.e., some of the data sets suggested by commenters comprised only a single 3-run average for each EGU with no individual run data, making assessment of variability impossible), it agrees that it inadvertently omitted the data from Stanton Unit 10 in the proposal analyses. Stanton Unit 10 does have a lower ''lowest'' 3-run data average than does the EGU selected for the new source floor analysis (Sandow Unit 5A) in the proposed reconsideration rule.

In this final action, the EPA used the Stanton data to calculate the MACT floor using the same statistical analyses used in the proposed rule (i.e., 99 percent upper predictive limit (UPL)), and the resulting MACT floor emission limit is 1.3 pounds per megawatt-hour (lb/MWh). Because this limit is less stringent than the new source performance standard (NSPS) finalized in the Utility NSPS (77 FR 9451; February 16, 2012), the EPA is finalizing a beyond-the-floor (BTF) MACT standard of 1.0 lb/MWh, which is the same level required by the CAA section 111 NSPS for these same sources.[5] See 40 CFR 60.43Da(l)(1)(i). Cost is a required consideration in establishing CAA section 111 rules and in going BTF in establishing CAA section 112 rules. We evaluated cost in assessing whether to go BTF for this standard and concluded that it was appropriate to go BTF to a level of 1.0 lb/MWh. Moreover, the NSPS limit (also 1.0 lb/MWh) is in place and coal-fired EGUs are required to comply with that limit. As such, there is no additional cost to these sources.[6] Furthermore, we have not identified any non-air quality health or environmental impacts or energy requirements associated with the final standard set at this level. In addition, in support of the proposed reconsideration rule, we evaluated an emissions level more stringent than 1.0 lb/MWh and found that level to not be cost effective.[7] For these reasons, we are finalizing 1.0 lb/MWh as the new source MATS NESHAP limit.

In the proposed reconsideration rule, we indicated that detection level issues may arise from using a sorbent trap when short sampling periods (e.g., 30 minutes) are used. As such, the EPA solicited comment on its establishment of a Representative Detection Level (RDL) associated with Hg sorbent traps. The EPA also solicited comment on whether the UPL calculated floor should be compared against the 3XRDL value for Hg to account for the shorter sampling periods (the 3XRDL approach). The EPA received several comments, ranging from strong support for the Hg RDL and the proposed emission limit because, at that level, the commenters asserted that vendors would be able to provide commercial guarantees, to concerns about the specific inputs to the 3XRDL calculation and the application of the 3xRDL approach. See section 2.2.1 of the response to comments document (RTC) for a more complete discussion and response to these comments.

In the proposed reconsideration rule, the EPA recognized that 30 minutes of sample collection is the shortest reasonable amount of time available for collecting and changing sorbent tubes to provide the quick, reliable feedback that will allow sources to react to changing Hg emissions levels and assure compliance with the final Hg limit. Some commenters pointed out that the EPA's memorandum entitled ''Determination of Representative Detection Level (RDL) and 3 X RDL Values for Mercury Measured Using Sorbent Trap Technologies,''[8] contains a 30-minute sample collection time in the 3XRDL calculation, but the text of the memorandum references a 20-minute sample collection time. The EPA has revised the text of the memorandum to reflect its original intent, which was to focus on a sample collection period of 30 minutes (not 20 minutes). The revised memorandum focuses on the 30-minute sample collection period. Given that it takes 5 minutes for sorbent trap insertion and removal, it would take a total of 40 minutes to secure the requisite sample collection (30 minutes for sample collection, 5 minutes to remove the sorbent trap, and 5 minutes to re-insert the trap). We are finalizing the Hg limit using the 3XRDL approach assuming a 30-minute sampling time.

2. Filterable PM Testing, Monitoring, and Compliance

Certification for New EGUs in the MATS NESHAP Rule

Several monitoring options for the fPM standard for new sources were provided in the MATS NESHAP final rule, including quarterly stack testing, PM CEMS, and PM CPMS with annual testing.

The EPA sought comment on whether to retain the quarterly stack testing compliance option for new EGUs, given that continuous, direct measurement of fPM or a correlated parameter is available, is preferable for determining compliance on a continuous basis, and is likely to be used by most new EGUs to monitor compliance with the proposed new source standards. As mentioned above, this final action does not retain the quarterly fPM performance testing option for new EGUs. New EGUs can be designed to incorporate PM CEMS or PM CPMS from the outset, without being impeded by retrofit location installation constraints that could impact existing EGUs. This final action now requires new sources to use either PM CEMS or PM CPMS as options for determining compliance with the new source fPM limits.

The EPA requested comment on a number of issues associated with PM CPMS. The EPA first solicited comment on three approaches to establish an operating limit based on emissions testing for those EGU owners or operators who choose to use PM CPMS as the means of demonstrating compliance with the fPM emission limit. The first approach would require an EGU owner or operator to use the highest parameter value obtained during any run of an individual emissions test as the operating limit when the result of that individual test was below the limit. The second approach would require an EGU owner or operator to use the average parameter value obtained from

[5] The CAA section 111 standard is based on the performance of EGUs with the best performing SO_2 controls, a reasonable incremental cost effectiveness of less than $1,000 per ton of SO_2 controlled, and controls that result in minimal secondary environmental and energy impacts.

[6] The final Utility NSPS limit was not challenged and coal-fired EGUs constructed after May 3, 2011, must meet that limit.

[7] See Docket ID EPA–HQ–OAR–2009–0234–20221 and *National Emission Standards for Hazardous Air Pollutants (NESHAP) Beyond the Maximum Achievable Control Technology (MACT) Floor ('Beyond-the-Floor') Analysis for Revised Emission Standards for New Source Coal-and Oil-fired Electric Utility Steam Generating Units* also in the rulemaking docket.

[8] The EPA developed the memorandum to determine appropriate RDL and 3XRDL values for sorbent trap monitoring systems, as well as calculate an emissions limit, in order to determine the shortest, reasonable sample collection period for those systems. See EPA Docket ID EPA–HQ–OAR–2009–0234–20222.

all runs of an individual emissions test as the operating limit, provided that the result of the individual emissions test met the emissions limit. The third approach, which the EPA is finalizing in this final action, would require an EGU owner or operator to use the higher of the following: (1) A parameter scaled from all values obtained during an individual emissions test to 75 percent of the emissions limit or (2) the average parameter value obtained from all runs of an individual emissions test as the operating limit provided that the result of the individual emissions test met the emissions limit. As established and reaffirmed in the recent Sewage Sludge Incineration, Major Source Industrial Boiler, and Portland Cement rules,[9] it is appropriate to provide increased operational flexibility and reduced emissions testing for sources that emit at or below 75 percent of a standard—whether an emissions or operating limit—as these are the lowest emitting sources. Reduced emissions testing is available in this final rule for those owners or operators whose EGU emissions do not exceed this 75 percent threshold. This 75 percent threshold allows for compliance flexibility and is simultaneously protective of the emission standards. The EPA believes well performing EGUs, i.e., those whose emissions do not exceed 75 percent of the emissions limit, should not face additional scrutiny or testing consequences provided their emissions remain equivalent to or below the 75 percent threshold. In this final action, the EPA uses the 75 percent threshold so as not to impose unintended and costly retest requirements for the lowest emitting sources and to provide for more cost effective, continuous, PM parametric monitoring across the EGU sector. This approach was selected from the options considered as it provides the greatest amount of EGU owner or operator flexibility while demonstrating continuous compliance for EGUs. With this parametric monitoring approach in place, the EPA expects EGUs to evaluate control options that provide excellent fPM emissions control and provide them greater operational flexibility.

Moreover, after each exceedance of the operating limit, the EPA proposed to require emissions testing to verify or re-adjust the operating limit, consistent with the approach contained in the recently-promulgated Portland cement MACT standard (see 78 FR 10014). One commenter objected to potential frequent emissions testing to reassess the operating limit and then being subject to a violation of the emissions limit. The EPA does not believe that too-frequent testing will be required. As discussed in section 4.3.5 of the RTC, the EPA believes well-designed emissions testing will provide an operating limit corresponding with EGU operation, and such testing should yield an operating limit that would not be expected to be exceeded during the course of EGU operation. Therefore, an operating limit developed from well-designed emissions testing should have little, if any, need for frequent reassessment via emissions testing more frequently than the mandated annual reassessment because the source will be able to meet the limit on an ongoing basis.

Finally, the EPA proposed that PM CPMS exceedances leading to more than 4 required emissions tests in a 12-month period (rolling monthly) would be presumed (subject to the possibility of rebuttal by the EGU owner or operator) to be a violation of the emissions limit, consistent with the approach contained in the newly-promulgated Portland cement MACT standard (see 78 FR 10014). The EPA received a number of comments on this proposed provision, including comments supporting and opposing the establishment of such a presumption.

The EPA disagrees with those comments opposing the presumptive violation, and believes the presumptive violation provision in the final rule is a reasonable and appropriate approach to ensure compliance with the standard. First, the EPA may permissibly establish such an approach by rule, assuming there is a reasonable factual basis to do so. See *Hazardous Waste Treatment Council* v. *EPA,* 886 F. 2d 355, 367–68 (DC Cir. 1989) (explaining that such presumptions can legitimately establish the elements of the EPA's *prima facie* case in an enforcement action). Second, there is a reasonable basis here for the presumption that four exceedances (i.e., increases over the parametric operating limit) in a calendar year are a violation of the emission standard. The parametric monitoring limit is established as a 30-day average of the averaged test value in the performance test, or the 75th percentile value if that is higher. In either instance, the 30-day averaging feature provides significant leeway to the EGU owner or operator not to deviate from the parametric operating level because the impact of transient peaks or valleys is limited due to the length of the rule's averaging period—30 boiler operating days, rolled daily. See 77 FR 42377/2 and sources there cited. See also 78 FR 10015, 10019; February, 12, 2013 (Portland Cement MACT) and the RTC for today's action.

The EPA also received comments addressing the re-testing requirements following an exceedance. Some commenters expressed concern about the burden of requiring sources to conduct performance tests in order to demonstrate compliance and to reassess the parameter level. In contrast, other commenters supported a requirement to require re-testing but claimed that the time period between observing a parameter exceedance and retesting is too long. The EPA believes that the re-testing requirements are reasonable and appropriate to identify non-compliance without imposing undue burden. For even a single exceedance to occur, the 30-day average would have to be higher than the operating limit established for the PM CPMS during normal EGU operation. If that occurs, then the EGU owner or operator is required to conduct an inspection to determine any abnormalities and an emissions test to re-establish or generate a new operating limit. Given that EGUs and their emissions control devices are designed to operate at known, specific conditions, deviations from these conditions are not expected and are indicative of problems with load, controls, or some combination of both. Where these sorts of problems result in an exceedance of the source's operating limit, it is reasonable to require re-testing in order to identify and then correct problems. More than four such exceedances of the 30-day average would mean that the EGU owner or operator was unable to determine or correct the problem, since inspection and re-calculation of the operating limit is required after each exceedance. This indicates an ongoing problem with maintaining process control and/or control device operation, which would be the basis for a presumptive violation of the emissions standard. Moreover, the EPA disagrees that the period between exceedance of the operating limit and retesting is too long and could result in possible excessive emissions. Specifically, some commenters claimed that the final rule should not limit the number of exceedances of the PM CPMS limit that require follow-up performance tests in any 12-month period. These commenters alleged that to do so does

[9] See *Standards of Performance for New Stationary Sources and Emission Guidelines for Existing Sources: Commercial and Industrial Solid Waste Incineration Units,* 76 FR 15736 (March 21, 2011); *Subpart DDDDD—National Emission Standards for Hazardous Air Pollutants for Major Sources: Industrial, Commercial, and Institutional Boilers and Process Heaters,* 40 CFR 63.7515(b); and *National Emission Standards for Hazardous Air Pollutants for the Portland Cement Manufacturing Industry and Standards of Performance for Portland Cement Plants,* 78 FR 10014 (February 12, 2013).

not ensure continuous compliance because the time period between an exceedance and testing could be too long, and a source could be exceeding the emission limit during that time period. The EPA believes that the re-testing requirements reflect a reasonable balance between ensuring compliance and limiting unnecessary testing burden on regulated sources. An EGU owner or operator is required to visually inspect the air pollution control device within 48 hours of the exceedance, and corrective action must be taken as soon as possible to return the PM CPMS measurement to within the established value. A performance test is also required within 45 days of the exceedance to determine compliance and verify or re-establish the PM CPMS limit. Thus, the EPA finds it unlikely that there will be long periods of noncompliance with the underlying fPM standard given the inspection and performance testing requirements.

The EPA also received comments stating that an EGU owner or operator should not be labeled a ''violator'' of the fPM standard as a result of a fourth compliance test in a 12-month period. First, the EPA notes that the rule identifies more than 4 compliance tests over a 12-month period as only a presumptive violation of the emissions limit. A presumption of a violation is just that—a presumption—and can be rebutted in any particular case.

Moreover, in determining whether the presumption has been successfully rebutted, a Court may consider relevant information such as data or other information showing that the EGU's operating process remained in control during the period of operating parameter exceedance, that the ongoing operation and maintenance conducted on the EGU ensured its emissions control devices remained in proper operating condition during the period of operating parameter exceedance, and that results of emissions tests conducted while replicating the conditions observed during the period of operating parameter exceedance remained below the emission limit.

For the reasons explained above, this final action includes the presumption of violation of the emissions limit if more than 4 emissions tests are required in a 12-month period.

V. Summary of Final Action and Changes Since Proposal—Utility NSPS

The EPA has made a number of changes from the reconsideration proposal in this final action after consideration of the public comments received. Most of the changes to the Utility NSPS clarify applicability and implementation issues raised by the commenters. The public comments received on the matters proposed for reconsideration and the responses to them can be viewed in the memorandum ''Summary of EGU NSPS Public Comments and Responses on Amendments Proposed November 30, 2012 (77 FR 71323)'' in rulemaking docket EPA–HQ–OAR–2011–0044.

In the proposed reconsideration rule, the EPA proposed a new definition for IGCC which would be consistent with the MATS NESHAP definition. However, as an alternative we requested comment on whether to retain a definition similar, but not identical, to the IGCC definition in the February 2012 final Utility NSPS. We have concluded that the alternative approach is most appropriate and are adopting a slightly revised definition that is consistent with the Agency's statements on IGCC contained in the RTC in support of the final Utility NSPS rule published on February 16, 2012 (77 FR 9304). Commenters generally supported amending the final Utility NSPS definition of IGCC, and this final action amends that definition consistent with the statements made in the RTC for the Utility NSPS. The Utility NSPS IGCC definition deals with the intent of an IGCC facility and is, thus, broader than the definition in the MATS NESHAP. The facility would still be subject to the same criteria pollutant emission standards even when burning natural gas for extended periods of time. The MATS NESHAP applicability is determined based on the EGU's utilization of coal and oil and the rule may not apply depending on the extent of natural gas usage.

The EPA proposed that the NSPS PM monitoring procedures be consistent with the MATS NESHAP requirements and included the use of quarterly stack testing, PM CPMS, or PM CEMS. In addition, the EPA sought comment on whether to include the quarterly stack testing compliance option for new EGUs, given that continuous, direct measurement of PM or a correlated parameter is available. EGUs complying with an output-based emissions standard can be designed to incorporate PM CEMS or PM CPMS from the outset, without being impeded by retrofit location installation constraints that would impact existing EGUs. This final action requires EGUs complying with an output-based standard to use either PM CEMS or PM CPMS as options for determining compliance with the PM limits. Therefore, the EPA is finalizing the same monitoring procedures for PM for the Utility NSPS as for new sources subject to the MATS NESHAP, and is not finalizing the quarterly stack testing option.

The EPA proposed that facilities using PM CPMS would be able to use either a continuous opacity monitoring system or a periodic alternate monitoring approach to monitor opacity. This final action does not require facilities using a PM CPMS to conduct opacity monitoring. The EPA has concluded that the use of a PM CPMS at the level of the emissions standard required in subpart Da is sufficient to demonstrate compliance with the opacity standard and that additional monitoring is an unnecessary burden.

VI. Technical Corrections and Clarifications

On April 19, 2012 (77 FR 23399), the EPA issued a technical corrections notice addressing certain corrections to the February 16, 2012 (77 FR 9304), MATS NESHAP and Utility NSPS. In the November 30, 2012, reconsideration proposal, we proposed several additional technical corrections. Specific to the NSPS, we proposed correcting the PM standard for facilities that commenced construction before March 1, 2005, to remove the extra significant digit that was inadvertently added and to correct the PM standard for facilities that commence modification after May 3, 2011, to be consistent with the original intent as expressed in the RTC of the final rule published on February 16, 2012 (77 FR 9304). We did not receive any negative comments on these issues and are finalizing them as proposed. Specific details are included in Table 3.

Specific to the MATS NESHAP, the EPA requested comment on whether the proposed technical corrections in Table 4 of the preamble provide the intended accuracy, clarity, and consistency. As mentioned in section 6.3 of the RTC, commenters supported the proposed changes on equations 2a and 3a and this final action contains those changes. As mentioned in section 6.3 of the RTC, commenters did not support the change from a 30 to 60-day notification period for performance testing, and that change was not made to the rule; however, a change to the General Provisions applicability table was made to provide a consistent 30-day notification period. Commenters suggested changes to certain definitions to make them more consistent with the Acid Rain rule provisions, but, as described in section 6.4 of the RTC, these rule changes were not made. These amendments are now being finalized to correct inaccuracies and other inadvertent errors in the final rule and to make the rule language

consistent with provisions addressed through this reconsideration.

The final technical changes are described in tables 3 and 4 of this preamble.

TABLE 3—MISCELLANEOUS TECHNICAL CORRECTIONS TO 40 CFR PART 60, SUBPART DA

Section of subpart Da	Description of correction
40 CFR 60.42Da(a)	Correct the erroneous "0.030" to the correct "0.03".
40 CFR 60.42Da(e)(1)(ii)	Correct the erroneous conversion "13 ng/J (0.015 lb/MMBtu)" to the correct "6.4 ng/J (0.015 lb/MMBtu)" by amending the regulatory text to specify that the requirements in 40 CFR 60.42Da(c) or (d), which includes two additional alternative limits, are available compliance alternatives for modified facilities.

TABLE 4—MISCELLANEOUS TECHNICAL CORRECTIONS TO 40 CFR PART 63, SUBPART UUUUU

Section of subpart UUUUU	Description of correction
40 CFR 63.9982(a)	Clarify the language to use the word "or" instead of "and."
40 CFR 63.9982(b) and (c)	Correct the discrepancy between 63.9982(b) and (c) and 63.9985(a).
40 CFR 63.10005(d)(2)(ii)	Correct the typographical error by replacing the incorrect "corresponding" with the correct "corresponds."
40 CFR 63.10005(i)(4)(ii) and (i)(5) and add 63.10005(i)(6).	Revise to clarify the determination and measurement of fuel moisture content.
40 CFR 63.10006(c)	Correct the omission of solid oil-derived fuel- and coal-fired EGUs and IGCC EGUs and the omission of section 10000(c).
40 CFR 63.10007(c)	Correct the omission of section 63.10023 from the list of sections to be followed in establishing an operating limit.
40 CFR 63.10009(b)(2)	Correct omission of the term "boiler operating" and clarify the term "Rt_i" in Equation 2a.
40 CFR 63.10009(b)(3)	Correct omission of the term "system" and clarify the term "Rt_i" in Equation 3a.
40 CFR 63.10010(j)(1)(i)	Correct the typographical error to use the correct word "your" instead of "you."
40 CFR 63.10030(b), (c), and (d)	Clarify the affected-source language.
	Change the period by which a Notification of Intent to conduct a performance test must be submitted to conform to the General Provisions.
40 CFR Section 63.10042	Correct the typographical error in the intended definition of "unit designed for coal ≥ 8,300 Btu/lb subcategory" by replacing the erroneous ">" with the correct "≥."
Table 5 to Subpart UUUUU of Part 63.	Correct the typographical error in footnote 4 by replacing the erroneous "≥" with the correct "≤."
Table 7 to Subpart UUUUU of Part 63.	Clarify the applicability of the alternate 90-day average for Hg in item 1.
	Revise item 3 in the table to clarify use of CMS for liquid oil-fired EGUs.
Table 9 to Subpart UUUUU of Part 63.	Revise to clarify the period for notification of conducting a performance test from 60 to 30 days.
Section 4.1 to Appendix A to Subpart UUUUU of Part 63.	Correct the typographical error by replacing the incorrect citation to "§ 63.10005(g)" with the correct "§ 63.9984(f)."
Section 5.2.2.2 to Appendix A to Subpart UUUUU of Part 63.	Correct the typographical error by replacing the incorrect citation to "Table A–4" with the correct "Table A–2"
Section 3.1.2.1.3 to Appendix B to Subpart UUUUU of Part 63.	Correct the typographical error by replacing the erroneous "≥" with the correct "≤."
Section 5.3.4 to Appendix B to Subpart UUUUU of Part 63.	Correct the section number from the incorrect "5.3.4" to the correct "5.3.3."

VII. Impacts of This Final Rule

A. Summary of Emissions Impacts, Costs and Benefits

Our analysis shows that new EGUs would choose to install and operate the same or similar air pollution control technologies in order to meet the revised emission limits as would have been necessary to meet the previously finalized standards. We project that this final action will result in no significant change in costs, emission reductions, or benefits.[10] Even if there were changes in costs for these EGUs, such changes would likely be small relative to both the overall costs of the individual projects and the overall costs and benefits of the final rule. Further, we believe that EGUs would put on the same controls for this final action that they would have for the original final MATS rule, so there should not be any incremental costs related to this revision.

B. What are the air impacts?

We believe that electric power companies will install the same or similar control technologies to comply with the final standards in this action as they would have installed to comply with the previously finalized MATS standards. Accordingly, we believe that this final action will not result in significant changes in emissions of any of the regulated pollutants.

C. What are the energy impacts?

This final action is not anticipated to have an effect on the supply, distribution, or use of energy. As previously stated, we believe that electric power companies would install the same or similar control technologies as they would have installed to comply with the previously finalized MATS standards.

D. What are the compliance costs?

We believe there will be no significant change in compliance costs as a result of this final action because electric

[10] See *Regulatory Impact Analysis for the Final Mercury and Air Toxics Standards [EPA–452/R–11–011]* (docket entry EPA–HQ–OAR–2009–0234–20131) and *Economic Impact Analysis for the Final Reconsideration of the Mercury and Air Toxics Standards* in rulemaking docket EPA–HQ–OAR–2009–0234. As noted earlier, because on an individual EGU-by-EGU basis we anticipate very similar costs, any changes to the baseline since we finalized MATS (e.g., potential impacts of the CSAPR decision) would not impact this determination.

power companies would install the same or similar control technologies as they would have installed to comply with the previously finalized MATS standards. Moreover, we find no additional monitoring costs are necessary to comply with this final action; however, as in any other rule, EGU owners or operators may choose to conduct additional monitoring (and incur its expense) for their own purposes.

E. What are the economic and employment impacts?

Because we expect that electric power companies would install the same or similar control technologies to meet the standards finalized in this action as they would have chosen to comply with the previously finalized MATS standards, we do not anticipate that this final action will result in significant changes in emissions, energy impacts, costs, benefits, or economic impacts. Likewise, we believe this action will not have any impacts on the price of electricity, employment or labor markets, or the U.S. economy.

F. What are the benefits of the final standards?

As previously stated, the EPA anticipates the power sector will not incur significant compliance costs or savings as a result of this action and we do not anticipate any significant emission changes resulting from this action. Therefore, there are no direct monetized benefits or disbenefits associated with this action.

VIII. Statutory and Executive Order Reviews

A. Executive Order 12866: Regulatory Planning and Review and Executive Order 13563: Improving Regulation and Regulatory Review

Under Executive Order (EO) 12866 (58 FR 51735; October 4, 1993), this action is a ''significant regulatory action'' because it ''raises novel legal or policy issues.'' Accordingly, the EPA submitted this action to the Office of Management and Budget (OMB) for review under Executive Orders 12866 and 13563 (76 FR 3821; January 21, 2011) and any changes made in response to OMB recommendations have been documented in the docket for this action.

In addition, the EPA prepared an analysis of the potential costs and benefits associated with this action. This analysis is contained in the ''Economic Impact Analysis for the Final Reconsideration of the Mercury and Air Toxics Standards'' found in rulemaking docket EPA–HQ–OAR–2009–0234. Because our analysis shows that new electricity generating units would choose to install the same control technology in order to meet the revised emission limits as would have been necessary to meet the previously finalized MATS standards, we project that this action will result in no significant change in costs, emission reductions, or benefits.

B. Paperwork Reduction Act

This action does not impose any new information collection burden. Today's action does not change the information collection requirements previously finalized and, as a result, does not impose any additional burden on industry. However, OMB has previously approved the information collection requirements contained in the existing regulations (see 77 FR 9304) under the provisions of the Paperwork Reduction Act, 44 U.S.C. 3501 *et seq.* and has assigned OMB control number 2060–0567. The OMB control numbers for EPA's regulations are listed in 40 CFR part 9 and 48 CFR chapter 15.

C. Regulatory Flexibility Act

The Regulatory Flexibility Act generally requires an agency to prepare a regulatory flexibility analysis of any rule subject to notice and comment rulemaking requirements under the Administrative Procedure Act or any other statute unless the agency certifies that the rule will not have a significant economic impact on a substantial number of small entities. Small entities include small businesses, small not-for-profit enterprises, and small governmental jurisdictions.

For purposes of assessing the impacts of today's action on small entities, a small entity is defined as: (1) A small business as defined by the Small Business Administration's (SBA) regulations at 13 CFR 121.201; (2) a small governmental jurisdiction that is a government of a city, county, town, school district, or special district with a population of less that 50,000; and (3) a small organization that is any not-for-profit enterprise which is independently owned and operated and is not dominant in its field. Categories and entities potentially regulated by the final rule with applicable NAICS codes are provided in the Supplementary Information section of this action.

According to the SBA size standards for NAICS code 221122 Utilities-Fossil Fuel Electric Power Generation, a firm is small if, including its affiliates, it is primarily engaged in the generation, transmission, and or distribution of electric energy for sale and its total electric output for the preceding fiscal year did not exceed 4 million MWh.

After considering the economic impacts of today's action on small entities, I certify that the notice will not have a significant economic impact on a substantial number of small entities.

The EPA has determined that none of the small entities will experience a significant impact because the action imposes no additional regulatory requirements on owners or operators of affected sources. We have therefore concluded that today's action will not result in a significant economic impact on a substantial number of small entities.

D. Unfunded Mandates Reform Act

This action contains no Federal mandates under the provisions of Title II of the Unfunded Mandates Reform Act of 1995 (UMRA), 2 U.S.C. 1531–1538 for State, local, or tribal governments or the private sector. The action imposes no enforceable duty on any State, local, or tribal governments or the private sector. Therefore, this action is not subject to the requirements of UMRA sections 202 or 205.

This action is also not subject to the requirements of UMRA section 203 because it contains no regulatory requirements that might significantly or uniquely affect small governments because it contains no requirements that apply to such governments or impose obligations upon them.

E. Executive Order 13132: Federalism

This action does not have federalism implications. It will not have substantial direct effects on the states, on the relationship between the national government and the states, or on the distribution of power and responsibilities among the various levels of government, as specified in EO 13132. None of the affected facilities are owned or operated by state governments, and the requirements discussed in today's notice will not supersede state regulations that are more stringent. Thus, EO 13132 does not apply to today's notice of reconsideration.

F. Executive Order 13175: Consultation and Coordination With Indian Tribal Governments

This action does not have tribal implications. It will not have substantial direct effects on tribal governments, on the relationship between the Federal government and Indian tribes, or on the distribution of power and responsibilities between the Federal government and Indian tribes, as specified in EO 13175. No affected

facilities are owned or operated by Indian tribal governments. Thus, EO 13175 does not apply to today's action.

G. Executive Order 13045: Protection of Children From Environmental Health Risks and Safety Risks

This action is not subject to EO 13045 (62 FR 19885; April 23, 1997) because it is not economically significant as defined in EO 12866. The EPA has evaluated the environmental health or safety effects of the final MATS on children. The results of the evaluation are discussed in that final rule (77 FR 9304; February 16, 2012) and are contained in rulemaking docket EPA–HQ–OAR–2009–0234.

H. Executive Order 13211: Actions That Significantly Affect Energy Supply, Distribution, or Use

This action is not a ''significant energy action'' as defined in EO 13211 (66 FR 28355; May 22, 2001) because it is not likely to have a significant adverse effect on the supply, distribution, or use of energy. Further, we conclude that today's action is not likely to have any adverse energy effects because it is not expected to impose any additional regulatory requirements on the owners of affected facilities.

I. National Technology Transfer and Advancement Act

Section 12(d) of the National Technology Transfer and Advancement Act (NTTAA) of 1995 (Pub. L. 104–113; 15 U.S.C. 272 note) directs EPA to use voluntary consensus standards in their regulatory and procurement activities unless to do so would be inconsistent with applicable law or otherwise impracticable. Voluntary consensus standards are technical standards (e.g., material specifications, test methods, sampling procedures, business practices) developed or adopted by one or more voluntary consensus bodies. The NTTAA requires EPA to provide Congress, through the OMB, with explanations when EPA decides not to use available and applicable voluntary consensus standards.

During the development of the final MATS rule, the EPA searched for voluntary consensus standards that might be applicable. The search identified three voluntary consensus standards that were considered practical alternatives to the specified EPA test methods. An assessment of these and other voluntary consensus standards is presented in the preamble to the final MATS rule (77 FR 9441; February 16, 2012). Today's action does not make use of any additional technical standards beyond those cited in the final MATS rule. Therefore, the EPA is not considering the use of any additional voluntary consensus standards for this action.

J. Executive Order 12898: Federal Actions To Address Environmental Justice in Minority Populations and Low-income Populations

Executive Order 12898 (59 FR 7629; February 16, 1994) establishes federal executive policy on environmental justice. Its main provision directs federal agencies, to the greatest extent practicable and permitted by law, to make environmental justice part of their mission by identifying and addressing, as appropriate, disproportionately high and adverse human health or environmental effects of their programs, policies, and activities on minority populations and low-income populations in the United States.

The EPA has determined that this action will not have disproportionately high and adverse human health or environmental effects on minority or low-income populations because it does not affect the level of protection provided to human health or the environment. Our analysis shows that new EGUs would choose to install the same control technology in order to meet the revised emission limits as would have been necessary to meet the previously finalized standard. Under the relevant assumptions, we project that this action will result in no significant change in emission reductions.

K. Congressional Review Act

The Congressional Review Act, 5 U.S.C. 801 *et seq.,* as added by the Small Business Regulatory Enforcement Fairness Act of 1996, generally provides that before a rule may take effect, the agency promulgating the rule must submit a rule report, which includes a copy of the rule, to each House of the Congress and to the Comptroller General of the United States. The EPA will submit a report containing this final action and other required information to the U.S. Senate, the U.S. House of Representatives, and the Comptroller General of the United States prior to publication of the rule in the **Federal Register**. A major rule cannot take effect until 60 days after it is published in the **Federal Register**. This action is not a ''major rule'' as defined by 5 U.S.C. 804(2). This rule will be effective April 24, 2013.

List of Subjects in 40 CFR Parts 60 and 63

Environmental protection, Administrative practice and procedure, Air pollution control, Hazardous substances, Intergovernmental relations, Reporting and recordkeeping requirements.

Dated: March 28, 2013.

Bob Perciasepe,

Acting Administrator.

For the reasons discussed in the preamble, 40 CFR parts 60 and 63 are amended to read as follows:

PART 60—STANDARDS OF PERFORMANCE FOR NEW STATIONARY SOURCES

■ 1. The authority citation for part 60 continues to read as follows:

Authority: 42 U.S.C. 7401 *et seq.*

■ 2. Amend § 60.41Da by revising the definitions of ''Coal'' and ''Integrated gasification combined cycle electric utility steam generating unit,'' and by adding the definition of ''Natural gas'' in alphabetical order to read as follows:

§ 60.41Da Definitions.

* * * * *

Coal means all solid fuels classified as anthracite, bituminous, subbituminous, or lignite by the American Society of Testing and Materials in ASTM D388 (incorporated by reference, see § 60.17) and coal refuse. Synthetic fuels derived from coal for the purpose of creating useful heat, including but not limited to solvent-refined coal, gasified coal, coal-oil mixtures, and coal-water mixtures are included in this definition for the purposes of this subpart.

* * * * *

Integrated gasification combined cycle electric utility steam generating unit or *IGCC electric utility steam generating unit* means an electric utility combined cycle gas turbine that is designed to burn fuels containing 50 percent (by heat input) or more solid-derived fuel not meeting the definition of natural gas. The Administrator may waive the 50 percent solid-derived fuel requirement during periods of the gasification system construction, startup and commissioning, shutdown, or repair. No solid fuel is directly burned in the unit during operation.

* * * * *

Natural gas means a fluid mixture of hydrocarbons (e.g., methane, ethane, or propane), composed of at least 70 percent methane by volume or that has a gross calorific value between 35 and 41 megajoules (MJ) per dry standard cubic meter (950 and 1,100 Btu per dry standard cubic foot), that maintains a gaseous state under ISO conditions. In addition, *natural gas* contains 20.0 grains or less of total sulfur per 100 standard cubic feet. Finally, natural gas

does not include the following gaseous fuels: landfill gas, digester gas, refinery gas, sour gas, blast furnace gas, coal-derived gas, producer gas, coke oven gas, or any gaseous fuel produced in a process which might result in highly variable sulfur content or heating value.

* * * * *

■ 3. Amend § 60.42Da by revising paragraphs (a), (b)(2), and (e)(1) to read as follows:

§ 60.42Da Standards for particulate matter (PM).

(a) Except as provided in paragraph (f) of this section, on and after the date on which the initial performance test is completed or required to be completed under § 60.8, whichever date comes first, an owner or operator of an affected facility shall not cause to be discharged into the atmosphere from any affected facility for which construction, reconstruction, or modification commenced before March 1, 2005, any gases that contain PM in excess of 13 ng/J (0.03 lb/MMBtu) heat input.

(b) * * *

(2) An owner or operator of an affected facility that combusts only natural gas and/or synthetic natural gas that chemically meets the definition of natural gas is exempt from the opacity standard specified in paragraph (b) of this section.

* * * * *

(e) * * *

(1) On and after the date on which the initial performance test is completed or required to be completed under § 60.8, whichever date comes first, the owner or operator shall not cause to be discharged into the atmosphere from that affected facility any gases that contain PM in excess of the applicable emissions limit specified in paragraphs (e)(1)(i) or (ii) of this section.

(i) For an affected facility which commenced construction or reconstruction:

(A) 11 ng/J (0.090 lb/MWh) gross energy output; or

(B) 12 ng/J (0.097 lb/MWh) net energy output.

* * * * *

(ii) For an affected facility which commenced modification, the emission limits specified in paragraphs (c) or (d) of this section.

* * * * *

■ 4. Amend § 60.48Da by revising paragraphs (f), (o) introductory text, (o)(1), (o)(2) introductory text, (o)(3) introductory text, (o)(3)(i), and (o)(4) introductory text to read as follows:

§ 60.48Da Compliance provisions.

* * * * *

(f) For affected facilities for which construction, modification, or reconstruction commenced before May 4, 2011, compliance with the applicable daily average PM emissions limit is determined by calculating the arithmetic average of all hourly emission rates each boiler operating day, except for data obtained during startup, shutdown, or malfunction periods. Daily averages must be calculated for boiler operating days that have out-of-control periods totaling no more than 6 hours of unit operation during which the standard applies. For affected facilities for which construction or reconstruction commenced after May 3, 2011, that elect to demonstrate compliance using PM CEMS, compliance with the applicable PM emissions limit in § 60.42Da is determined on a 30-boiler operating day rolling average basis by calculating the arithmetic average of all hourly PM emission rates for the 30 successive boiler operating days, except for data obtained during periods of startup or shutdown.

* * * * *

(o) Compliance provisions for sources subject to § 60.42Da(c)(2), (d), or (e)(1)(ii). Except as provided for in paragraph (p) of this section, the owner or operator must demonstrate compliance with each applicable emissions limit according to the requirements in paragraphs (o)(1) through (o)(5) of this section.

(1) You must conduct a performance test to demonstrate initial compliance with the applicable PM emissions limit in § 60.42Da by the applicable date specified in § 60.8(a). Thereafter, you must conduct each subsequent performance test within 12 calendar months following the date the previous performance test was required to be conducted. You must conduct each performance test according to the requirements in § 60.8 using the test methods and procedures in § 60.50Da. The owner or operator of an affected facility that has not operated for 60 consecutive calendar days prior to the date that the subsequent performance test would have been required had the unit been operating is not required to perform the subsequent performance test until 30 calendar days after the next boiler operating day. Requests for additional 30 day extensions shall be granted by the relevant air division or office director of the appropriate Regional Office of the U.S. EPA.

(2) You must monitor the performance of each electrostatic precipitator or fabric filter (baghouse) operated to comply with the applicable PM emissions limit in § 60.42Da using a continuous opacity monitoring system (COMS) according to the requirements in paragraphs (o)(2)(i) through (vi) unless you elect to comply with one of the alternatives provided in paragraphs (o)(3) and (o)(4) of this section, as applicable to your control device.

* * * * *

(3) As an alternative to complying with the requirements of paragraph (o)(2) of this section, an owner or operator may elect to monitor the performance of an electrostatic precipitator (ESP) operated to comply with the applicable PM emissions limit in § 60.42Da using an ESP predictive model developed in accordance with the requirements in paragraphs (o)(3)(i) through (v) of this section.

(i) You must calibrate the ESP predictive model with each PM control device used to comply with the applicable PM emissions limit in § 60.42Da operating under normal conditions. In cases when a wet scrubber is used in combination with an ESP to comply with the PM emissions limit, the wet scrubber must be maintained and operated.

* * * * *

(4) As an alternative to complying with the requirements of paragraph (o)(2) of this section, an owner or operator may elect to monitor the performance of a fabric filter (baghouse) operated to comply with the applicable PM emissions limit in § 60.42Da by using a bag leak detection system according to the requirements in paragraphs (o)(4)(i) through (v) of this section.

* * * * *

■ 5. Amend § 60.49Da by:

■ a. Revising paragraphs (a) introductory text;

■ b. Adding paragraph (a)(3)(iv); and

■ c. Revising paragraphs (a)(4), (b) introductory text, and (t).

The revised and added text reads as follows:

§ 60.49Da Emission monitoring.

(a) An owner or operator of an affected facility subject to the opacity standard in § 60.42Da must monitor the opacity of emissions discharged from the affected facility to the atmosphere according to the applicable requirements in paragraphs (a)(1) through (4) of this section.

* * * * *

(3) * * *

(iv) If the maximum 6-minute opacity is less than 10 percent during the most recent Method 9 of appendix A–4 of this part performance test, the owner or operator may, as an alternative to

performing subsequent Method 9 of appendix A–4 performance tests, elect to perform subsequent monitoring using a digital opacity compliance system according to a site-specific monitoring plan approved by the Administrator. The observations must be similar, but not necessarily identical, to the requirements in paragraph (a)(3)(iii) of this section. For reference purposes in preparing the monitoring plan, see OAQPS ''Determination of Visible Emission Opacity from Stationary Sources Using Computer-Based Photographic Analysis Systems.'' This document is available from the U.S. Environmental Protection Agency (U.S. EPA); Office of Air Quality and Planning Standards; Sector Policies and Programs Division; Measurement Policy Group (D243–02), Research Triangle Park, NC 27711. This document is also available on the Technology Transfer Network (TTN) under Emission Measurement Center Preliminary Methods.

* * * * *

(4) An owner or operator of an affected facility that is subject to an opacity standard under § 60.42Da is not required to operate a COMS provided that affected facility meets the conditions in either paragraph (a)(4)(i) or (ii) of this section.

(i) The affected facility combusts only gaseous and/or liquid fuels (excluding residue oil) where the potential SO_2 emissions rate of each fuel is no greater than 26 ng/J (0.060 lb/MMBtu), and the unit operates according to a written site-specific monitoring plan approved by the permitting authority. This monitoring plan must include procedures and criteria for establishing and monitoring specific parameters for the affected facility indicative of compliance with the opacity standard. For testing performed as part of this site-specific monitoring plan, the permitting authority may require as an alternative to the notification and reporting requirements specified in §§ 60.8 and 60.11 that the owner or operator submit any deviations with the excess emissions report required under § 60.51Da(d).

(ii) The owner or operator of the affected facility installs, calibrates, operates, and maintains a particulate matter continuous parametric monitoring system (PM CPMS) according to the requirements specified in subpart UUUUU of part 63.

* * * * *

(b) The owner or operator of an affected facility must install, calibrate, maintain, and operate a CEMS, and record the output of the system, for measuring SO_2 emissions, except where only gaseous and/or liquid fuels (excluding residual oil) where the potential SO_2 emissions rate of each fuel is 26 ng/J (0.060 lb/MMBtu) or less are combusted, as follows:

* * * * *

(t) The owner or operator of an affected facility demonstrating compliance with the output-based emissions limit under § 60.42Da must either install, certify, operate, and maintain a CEMS for measuring PM emissions according to the requirements of paragraph (v) of this section or install, calibrate, operate, and maintain a PM CPMS according to the requirements for new facilities specified in subpart UUUUU of part 63 of this chapter. An owner or operator of an affected facility demonstrating compliance with the input-based emissions limit in § 60.42Da may install, certify, operate, and maintain a CEMS for measuring PM emissions according to the requirements of paragraph (v) of this section.

* * * * *

■ 6. Revise § 60.50Da(f) to read as follows:

§ 60.50Da Compliance determination procedures and methods.

* * * * *

(f) The owner or operator of an electric utility combined cycle gas turbine that does not meet the definition of an IGCC must conduct performance tests for PM, SO_2, and NO_X using the procedures of Method 19 of appendix A–7 of this part. The SO_2 and NO_X emission rates calculations from the gas turbine used in Method 19 of appendix A–7 of this part are determined when the gas turbine is performance tested under subpart GG of this part. The potential uncontrolled PM emission rate from a gas turbine is defined as 17 ng/J (0.04 lb/MMBtu) heat input.

* * * * *

PART 63—NATIONAL EMISSION STANDARDS FOR HAZARDOUS AIR POLLUTANTS FOR SOURCE CATEGORIES

■ 7. The authority citation for 40 CFR Part 63 continues to read as follows:

Authority: 42 U.S.C. 7401, *et seq.*

■ 8. In § 63.9982, revise paragraphs (a) introductory text, (b), and (c) to read as follows:

§ 63.9982 What is the affected source of this subpart?

(a) This subpart applies to each individual or group of two or more new, reconstructed, or existing affected source(s) as described in paragraphs (a)(1) and (2) of this section within a contiguous area and under common control.

* * * * *

(b) An EGU is new if you commence construction of the coal- or oil-fired EGU after May 3, 2011.

(c) An EGU is reconstructed if you meet the reconstruction criteria as defined in § 63.2, and if you commence reconstruction after May 3, 2011.

* * * * *

■ 9. In § 63.10000, revise paragraphs (c)(1)(iv) and (c)(2)(ii) to read as follows:

§ 63.10000 What are my general requirements for complying with this subpart?

* * * * *

(c) * * *

(1) * * *

(iv) If your coal-fired or solid oil derived fuel-fired EGU or IGCC EGU does not qualify as a LEE for total non-mercury HAP metals, individual non-mercury HAP metals, or filterable particulate matter (PM), you must demonstrate compliance through an initial performance test and you must monitor continuous performance through either use of a particulate matter continuous parametric monitoring system (PM CPMS), a PM CEMS, or, for an existing EGU, compliance performance testing repeated quarterly.

* * * * *

(c) * * *

(2) * * *

(ii) If your liquid oil-fired unit does not qualify as a LEE for total HAP metals (including mercury), individual metals (including mercury), or filterable PM you must demonstrate compliance through an initial performance test and you must monitor continuous performance through either use of a PM CPMS, a PM CEMS, or, for an existing EGU, performance testing conducted quarterly.

* * * * *

■ 10. Amend § 63.10005 by:

■ a. Revising paragraphs (d)(2)(ii), (i)(4)(ii) and (i)(5);

■ b. Adding paragraph (i)(6).

The revised and added text read as follows:

§ 63.10005 What are my initial compliance requirements and by what date must I conduct them?

* * * * *

(d) * * *

(2) * * *

(ii) You must demonstrate continuous compliance with the PM CPMS site-specific operating limit that corresponds to the results of the performance test

demonstrating compliance with the emission limit with which you choose to comply.

* * * * *

(i) * * *

(4) * * *

(ii) ASTM D4006–11, ''Standard Test Method for Water in Crude Oil by Distillation,'' including Annex A1 and Appendix A1.

* * * * *

(5) Use one of the following methods to obtain fuel moisture samples:

(i) ASTM D4177–95 (Reapproved 2010), ''Standard Practice for Automatic Sampling of Petroleum and Petroleum Products,'' including Annexes A1 through A6 and Appendices X1 and X2, or

(ii) ASTM D4057–06 (Reapproved 2011), ''Standard Practice for Manual Sampling of Petroleum and Petroleum Products,'' including Annex A1.

(6) Should the moisture in your liquid fuel be more than 1.0 percent by weight, you must

(i) Conduct HCl and HF emissions testing quarterly (and monitor site-specific operating parameters as provided in § 63.10000(c)(2)(iii) or

(ii) Use an HCl CEMS and/or HF CEMS.

* * * * *

■ 11. In § 63.10006, revise paragraph (c) to read as follows:

§ 63.10006 When must I conduct subsequent performance tests or tune-ups?

* * * * *

(c) Except where paragraphs (a) or (b) of this section apply, or where you install, certify, and operate a PM CEMS to demonstrate compliance with a filterable PM emissions limit, for liquid oil-, solid oil-derived fuel-, coal-fired and IGCC EGUs, you must conduct all applicable periodic emissions tests for filterable PM, individual, or total HAP metals emissions according to Table 5 to this subpart, § 63.10007, and § 63.10000(c), except as otherwise provided in § 63.10021(d)(1).

* * * * *

■ 12. In § 63.10007, revise paragraph (c) to read as follows:

§ 63.10007 What methods and other procedures must I use for the performance tests?

* * * * *

(c) If you choose the filterable PM method to comply with the PM emission limit and demonstrate continuous performance using a PM CPMS as provided for in § 63.10000(c), you must also establish an operating limit according to § 63.10011(b), § 63.10023, and Tables 4 and 6 to this subpart. Should you desire to have operating limits that correspond to loads other than maximum normal operating load, you must conduct testing at those other loads to determine the additional operating limits.

* * * * *

■ 13. In § 63.10009, revise paragraphs (b)(2) and (b)(3) to read as follows:

§ 63.10009 May I use emissions averaging to comply with this subpart?

* * * * *

(b) * * *

(2) Weighted 30-boiler operating day rolling average emissions rate equations for pollutants other than Hg. Use equation 2a or 2b to calculate the 30 day rolling average emissions daily.

$$WAER = \frac{\sum_{i=1}^{p}\left[\sum_{i=1}^{n}(Her_i \times Rm_i)\right]_p + \sum_{i=1}^{m}(Ter_i \times Rt_i)}{\sum_{i=1}^{p}\left[\sum_{i=1}^{n}(Rm_i)\right]_p + \sum_{i=1}^{m} Rt_i} \quad (Eq.2a)$$

Where:

Her_i = hourly emission rate (e.g., lb/MMBtu, lb/MWh) from unit i's CEMS for the preceding 30-group boiler operating days,

Rm_i = hourly heat input or gross electrical output from unit i for the preceding 30-group boiler operating days,

p = number of EGUs in emissions averaging group that rely on CEMS or sorbent trap monitoring,

n = number of hourly rates collected over 30-group boiler operating days,

Ter_i = Emissions rate from most recent emissions test of unit i in terms of lb/heat input or lb/gross electrical output,

Rt_i = Total heat input or gross electrical output of unit i for the preceding 30-boiler operating days, and

m = number of EGUs in emissions averaging group that rely on emissions testing.

$$WAER = \frac{\sum_{i=1}^{p}\left[\sum_{i=1}^{n}(Her_i \times Sm_i \times Cfm_i)\right]_p + \sum_{i=1}^{m}(Ter_i \times St_i \times Cft_i)}{\sum_{i=1}^{p}\left[\sum_{i=1}^{n}(Sm_i \times Cfm_i)\right]_p + \sum_{i=1}^{m} St_i \times Cft_i} \quad (Eq.2b)$$

Where:

variables with similar names share the descriptions for Equation 2a,

Sm_i = steam generation in units of pounds from unit i that uses CEMS for the preceding 30-group boiler operating days,

Cfm_i = conversion factor, calculated from the most recent compliance test results, in units of heat input per pound of steam generated or gross electrical output per pound of steam generated, from unit i that uses CEMS from the preceding 30 group boiler operating days,

St_i = steam generation in units of pounds from unit i that uses emissions testing, and

Cft_i = conversion factor, calculated from the most recent compliance test results, in units of heat input per pound of steam generated or gross electrical output per pound of steam generated, from unit i that uses emissions testing.

(3) Weighted 90-boiler operating day rolling average emissions rate equations for Hg emissions from EGUs in the ''coal-fired unit not low rank virgin coal'' subcategory. Use equation 3a or 3b to calculate the 90-day rolling average emissions daily.

$$WAER = \frac{\sum_{i=1}^{p}\left[\sum_{i=1}^{n}(Her_i \times Rm_i)\right]_p + \sum_{i=1}^{m}(Ter_i \times Rt_i)}{\sum_{i=1}^{p}\left[\sum_{i=1}^{n}(Rm_i)\right]_p + \sum_{i=1}^{m} Rt_i} \quad (Eq.3a)$$

Where:

Her_i = hourly emission rate from unit i's CEMS or Hg sorbent trap monitoring system for the preceding 90-group boiler operating days,

Rm_i = hourly heat input or gross electrical output from unit i for the preceding 90-group boiler operating days,

p = number of EGUs in emissions averaging group that rely on CEMS,

n = number of hourly rates collected over the 90-group boiler operating days,

Ter_i = Emissions rate from most recent emissions test of unit i in terms of lb/heat input or lb/gross electrical output,

Rt_i = Total heat input or gross electrical output of unit i for the preceding 90-boiler operating days, and

m = number of EGUs in emissions averaging group that rely on emissions testing.

$$WAER = \frac{\sum_{i=1}^{p}\left[\sum_{i=1}^{n}(Her_i \times Sm_i \times Cfm_i)\right]_p + \sum_{i=1}^{m}(Ter_i \times St_i \times Cft_i)}{\sum_{i=1}^{p}\left[\sum_{i=1}^{n}(Sm_i \times Cfm_i)\right]_p + \sum_{i=1}^{m} St_i \times Cft_i} \quad (Eq.3b)$$

Where:

variables with similar names share the descriptions for Equation 2a,

Sm_i = steam generation in units of pounds from unit i that uses CEMS or a Hg sorbent trap monitoring for the preceding 90-group boiler operating days,

Cfm_i = conversion factor, calculated from the most recent compliance test results, in units of heat input per pound of steam generated or gross electrical output per pound of steam generated, from unit i that uses CEMS or sorbent trap monitoring from the preceding 90-group boiler operating days,

St_i = steam generation in units of pounds from unit i that uses emissions testing, and

Cft_i = conversion factor, calculated from the most recent emissions test results, in units of heat input per pound of steam generated or gross electrical output per pound of steam generated, from unit i that uses emissions testing.

* * * * *

■ 14. In § 63.10010, revise paragraph (j)(1)(i) to read as follows:

§ 63.10010 What are my monitoring, installation, operation, and maintenance requirements?

* * * * *

(j) * * *

(1) * * *

(i) Install and certify your HAP metals CEMS according to the procedures and requirements in your approved site-specific test plan as required in § 63.7(e). The reportable measurement output from the HAP metals CEMS must be expressed in units of the applicable emissions limit (*e.g.,* lb/MMBtu, lb/MWh) and in the form of a 30-boiler operating day rolling average.

* * * * *

■ 15. Amend § 63.10021 by adding paragraphs (c)(1) and (2) to read as follows:

§ 63.10021 How do I demonstrate continuous compliance with the emission limitations, operating limits, and work practice standards?

* * * * *

(c) * * *

(1) For any exceedance of the 30-boiler operating day PM CPMS average value from the established operating parameter limit for an EGU subject to the emissions limits in Table 1 to this subpart, you must:

(i) Within 48 hours of the exceedance, visually inspect the air pollution control device (APCD);

(ii) If the inspection of the APCD identifies the cause of the exceedance, take corrective action as soon as possible, and return the PM CPMS measurement to within the established value; and

(iii) Within 45 days of the exceedance or at the time of the annual compliance test, whichever comes first, conduct a PM emissions compliance test to determine compliance with the PM emissions limit and to verify or re-establish the CPMS operating limit. You are not required to conduct any additional testing for any exceedances that occur between the time of the original exceedance and the PM emissions compliance test required under this paragraph.

(2) PM CPMS exceedances of the operating limit for an EGU subject to the emissions limits in Table 1 of this subpart leading to more than four required performance tests in a 12-month period (rolling monthly) constitute a separate violation of this subpart.

* * * * *

■ 16. In § 63.10023, revise paragraph (b) to read as follows:

§ 63.10023 How do I establish my PM CPMS operating limit and determine compliance with it?

* * * * *

(b) Determine your operating limit as provided in paragraph (b)(1) or (b)(2) of this section. You must verify an existing or establish a new operating limit after each repeated performance test.

(1) For an existing EGU, determine your operating limit based on the highest 1-hour average PM CPMS output value recorded during the performance test.

(2) For a new EGU, determine your operating limit as follows.

(i) If your PM performance test demonstrates your PM emissions do not exceed 75 percent of your emissions limit, you will use the average PM CPMS value recorded during the PM compliance test, the milliamp equivalent of zero output from your PM CPMS, and the average PM result of your compliance test to establish your operating limit. Calculate the operating limit by establishing a relationship of PM CPMS signal to PM concentration using the PM CPMS instrument zero, the average PM CPMS values corresponding to the three compliance test runs, and the average PM concentration from the Method 5 compliance test with the procedures in (b)(2)(i)(A) through (D) of this section.

(A) Determine your PM CPMS instrument zero output with one of the following procedures.

(*1*) Zero point data for in-situ instruments should be obtained by removing the instrument from the stack and monitoring ambient air on a test bench.

(*2*) Zero point data for extractive instruments should be obtained by removing the extractive probe from the stack and drawing in clean ambient air.

(*3*) The zero point can also can be obtained by performing manual reference method measurements when the flue gas is free of PM emissions or contains very low PM concentrations (e.g., when your process is not operating, but the fans are operating or your source is combusting only natural gas) and plotting these with the compliance data to find the zero intercept.

(*4*) If none of the steps in paragraphs (A)(*1*) through (*3*) of this section are possible, you must use a zero output value provided by the manufacturer.

(B) Determine your PM CPMS instrument average (*x*) in milliamps, and the average of your corresponding three PM compliance test runs (*y*), using equation 10.

$$\bar{x} = \frac{1}{n}\sum_{i=1}^{n} X_i, \bar{y} = \frac{1}{n}\sum_{i=1}^{n} Y_i \qquad \text{(Eq. 10)}$$

Where:

X_i = the PM CPMS data points for run i of the performance test,

Y_i = the PM emissions value (in lb/MWh) for run i of the performance test, and

n = the number of data points.

(C) With your PM CPMS instrument zero expressed in milliamps, your three run average PM CPMS milliamp value, and your three run average PM emissions value (in lb/MWh) from your compliance runs, determine a relationship of PM lb/MWh per milliamp with equation 11.

$$R = \frac{y}{(x - z)} \qquad \text{(Eq. 11)}$$

Where:

R = the relative PM lb/MWh per milliamp for your PM CPMS,

$\bar{y}$ = the three run average PM lb/MWh,

$\bar{x}$ = the three run average milliamp output from your PM CPMS, and

z = the milliamp equivalent of your instrument zero determined from (b)(2)(i)(A) of this section.

(D) Determine your source specific 30-day rolling average operating limit using the PM lb/MWh per milliamp value from equation 11 in equation 12, below. This sets your operating limit at the PM CPMS output value corresponding to 75 percent of your emission limit.

$$O_L = z + \frac{(0.75 \times L)}{R} \qquad \text{(Eq. 12)}$$

Where:

O_L = the operating limit for your PM CPMS on a 30-day rolling average, in milliamps,

L = your source PM emissions limit in lb/MWh,

z = your instrument zero in milliamps, determined from (b)(2)(i)(A) of this section, and

R = the relative PM lb/MWh per milliamp for your PM CPMS, from equation 11.

(ii) If your PM compliance test demonstrates your PM emissions exceed 75 percent of your emissions limit, you will use the average PM CPMS value recorded during the PM compliance test demonstrating compliance with the PM limit to establish your operating limit.

(A) Determine your operating limit by averaging the PM CPMS milliamp output corresponding to your three PM performance test runs that demonstrate compliance with the emission limit using equation 13.

$$O_h = \frac{1}{n}\sum_{i=1}^{n} X_i \qquad \text{(Eq. 13)}$$

Where:

X_i = the PM CPMS data points for all runs i,

n = the number of data points, and

O_h = your site specific operating limit, in milliamps.

(iii) Your PM CPMS must provide a 4–20 milliamp output and the establishment of its relationship to manual reference method measurements must be determined in units of milliamps.

(iv) Your PM CPMS operating range must be capable of reading PM concentrations from zero to a level equivalent to two times your allowable emission limit. If your PM CPMS is an auto-ranging instrument capable of multiple scales, the primary range of the instrument must be capable of reading PM concentration from zero to a level equivalent to two times your allowable emission limit.

(v) During the initial performance test or any such subsequent performance test that demonstrates compliance with the PM limit, record and average all milliamp output values from the PM CPMS for the periods corresponding to the compliance test runs.

(vi) For PM performance test reports used to set a PM CPMS operating limit, the electronic submission of the test report must also include the make and model of the PM CPMS instrument, serial number of the instrument, analytical principle of the instrument (e.g. beta attenuation), span of the instruments primary analytical range, milliamp value equivalent to the instrument zero output, technique by which this zero value was determined, and the average milliamp signal corresponding to each PM compliance test run.

* * * * *

■ 17. In § 63.10030, revise paragraphs (b), (c), and (d) to read as follows:

§ 63.10030 What notifications must I submit and when?

* * * * *

(b) As specified in § 63.9(b)(2), if you startup your EGU that is an affected source before April 16, 2012, you must submit an Initial Notification not later than 120 days after April 16, 2012.

(c) As specified in § 63.9(b)(4) and (b)(5), if you startup your new or reconstructed EGU that is an affected source on or after April 16, 2012, you must submit an Initial Notification not later than 15 days after the actual date of startup of the EGU that is an affected source.

(d) When you are required to conduct a performance test, you must submit a Notification of Intent to conduct a performance test at least 30 days before the performance test is scheduled to begin.

* * * * *

■ 18. Amend § 63.10042 by revising the definition of ''Unit designed for coal > 8,300 Btu/lb subcategory'' to read as follows:

§ 63.10042 What definitions apply to this subpart?

* * * * *

Unit designed for coal ≥ 8,300 Btu/lb subcategory means any coal-fired EGU that is not a coal-fired EGU in the ''unit designed for low rank virgin coal'' subcategory.

* * * * *

■ 19. Revise Table 1 to Subpart UUUUU of Part 63 to read as follows:

TABLE 1 TO SUBPART UUUUU OF PART 63—EMISSION LIMITS FOR NEW OR RECONSTRUCTED EGUS

[As stated in § 63.9991, you must comply with the following applicable emission limit]

If your EGU is in this subcategory	For the following pollutants	You must meet the following emission limits and work practice standards	Using these requirements, as appropriate (e.g., specified sampling volume or test run duration) and limitations with the test methods in Table 5
1. Coal-fired unit not low rank virgin coal.	a. Filterable particulate matter (PM).	9.0E–2 lb/MWh [1]	Collect a minimum of 4 dscm per run.
	OR	OR	
	Total non-Hg HAP metals	6.0E–2 lb/GWh	Collect a minimum of 4 dscm per run.
	OR	OR	
	Individual HAP metals:		Collect a minimum of 3 dscm per run.
	Antimony (Sb)	8.0E–3 lb/GWh.	
	Arsenic (As)	3.0E–3 lb/GWh.	
	Beryllium (Be)	6.0E–4 lb/GWh.	
	Cadmium (Cd)	4.0E–4 lb/GWh.	
	Chromium (Cr)	7.0E–3 lb/GWh.	
	Cobalt (Co)	2.0E–3 lb/GWh.	
	Lead (Pb)	2.0E–2 lb/GWh.	
	Manganese (Mn)	4.0E–3 lb/GWh.	
	Nickel (Ni)	4.0E–2 lb/GWh.	
	Selenium (Se)	5.0E–2 lb/GWh.	
	b. Hydrogen chloride (HCl)	1.0E–2 lb/MWh	For Method 26A, collect a minimum of 3 dscm per run. For ASTM D6348–03 [2] or Method 320, sample for a minimum of 1 hour.
	OR		
	Sulfur dioxide (SO_2) [3]	1.0 lb/MWh	SO_2 CEMS.
	c. Mercury (Hg)	3.0E–3 lb/GWh	Hg CEMS or sorbent trap monitoring system only.
2. Coal-fired units low rank virgin coal.	a. Filterable particulate matter (PM).	9.0E–2 lb/MWh [1]	Collect a minimum of 4 dscm per run.
	OR	OR	
	Total non-Hg HAP metals	6.0E–2 lb/GWh	Collect a minimum of 4 dscm per run.
	OR	OR	
	Individual HAP metals:		Collect a minimum of 3 dscm per run.
	Antimony (Sb)	8.0E–3 lb/GWh.	
	Arsenic (As)	3.0E–3 lb/GWh.	
	Beryllium (Be)	6.0E–4 lb/GWh.	
	Cadmium (Cd)	4.0E–4 lb/GWh.	
	Chromium (Cr)	7.0E–3 lb/GWh.	
	Cobalt (Co)	2.0E–3 lb/GWh.	
	Lead (Pb)	2.0E–2 lb/GWh.	
	Manganese (Mn)	4.0E–3 lb/GWh.	
	Nickel (Ni)	4.0E–2 lb/GWh.	
	Selenium (Se)	5.0E–2 lb/GWh.	
	b. Hydrogen chloride (HCl)	1.0E–2 lb/MWh	For Method 26A, collect a minimum of 3 dscm per run. For ASTM D6348–03 [2] or Method 320, sample for a minimum of 1 hour.
	OR		
	Sulfur dioxide (SO_2) [3]	1.0 lb/MWh	SO_2 CEMS.
	c. Mercury (Hg)	4.0E–2 lb/GWh	Hg CEMS or sorbent trap monitoring system only.
3. IGCC unit	a. Filterable particulate matter (PM).	7.0E–2 lb/MWh [4] 9.0E–2 lb/MWh [5]	Collect a minimum of 1 dscm per run.
	OR	OR	
	Total non-Hg HAP metals	4.0E–1 lb/GWh	Collect a minimum of 1 dscm per run.
	OR	OR	
	Individual HAP metals:		Collect a minimum of 2 dscm per run.
	Antimony (Sb)	2.0E–2 lb/GWh.	
	Arsenic (As)	2.0E–2 lb/GWh.	
	Beryllium (Be)	1.0E–3 lb/GWh.	
	Cadmium (Cd)	2.0E–3 lb/GWh.	
	Chromium (Cr)	4.0E–2 lb/GWh.	

TABLE 1 TO SUBPART UUUUU OF PART 63—EMISSION LIMITS FOR NEW OR RECONSTRUCTED EGUS—Continued

[As stated in § 63.9991, you must comply with the following applicable emission limit]

If your EGU is in this subcategory	For the following pollutants	You must meet the following emission limits and work practice standards	Using these requirements, as appropriate (e.g., specified sampling volume or test run duration) and limitations with the test methods in Table 5
	Cobalt (Co)	4.0E–3 lb/GWh.	
	Lead (Pb)	9.0E–3 lb/GWh.	
	Manganese (Mn)	2.0E–2 lb/GWh.	
	Nickel (Ni)	7.0E–2 lb/GWh.	
	Selenium (Se)	3.0E–1 lb/GWh.	
	b. Hydrogen chloride (HCl)	2.0E–3 lb/MWh	For Method 26A, collect a minimum of 1 dscm per run; for Method 26, collect a minimum of 120 liters per run. For ASTM D6348–03 [2] or Method 320, sample for a minimum of 1 hour.
	OR		
	Sulfur dioxide (SO_2) [3]	4.0E–1 lb/MWh	SO_2 CEMS.
	c. Mercury (Hg)	3.0E–3 lb/GWh	Hg CEMS or sorbent trap monitoring system only.
4. Liquid oil-fired unit—continental (excluding limited-use liquid oil-fired subcategory units).	a. Filterable particulate matter (PM).	3.0E–1 lb/MWh [1]	Collect a minimum of 1 dscm per run.
	OR	OR	
	Total HAP metals	2.0E–4 lb/MWh	Collect a minimum of 2 dscm per run.
	OR	OR	
	Individual HAP metals:		Collect a minimum of 2 dscm per run.
	Antimony (Sb)	1.0E–2 lb/GWh.	
	Arsenic (As)	3.0E–3 lb/GWh.	
	Beryllium (Be)	5.0E–4 lb/GWh.	
	Cadmium (Cd)	2.0E–4 lb/GWh.	
	Chromium (Cr)	2.0E–2 lb/GWh.	
	Cobalt (Co)	3.0E–2 lb/GWh.	
	Lead (Pb)	8.0E–3 lb/GWh.	
	Manganese (Mn)	2.0E–2 lb/GWh.	
	Nickel (Ni)	9.0E–2 lb/GWh.	
	Selenium (Se)	2.0E–2 lb/GWh.	
	Mercury (Hg)	1.0E–4 lb/GWh	For Method 30B sample volume determination (Section 8.2.4), the estimated Hg concentration should nominally be < ½ the standard.
	b. Hydrogen chloride (HCl)	4.0E–4 lb/MWh	For Method 26A, collect a minimum of 3 dscm per run. For ASTM D6348–03 [2] or Method 320, sample for a minimum of 1 hour.
	c. Hydrogen fluoride (HF)	4.0E–4 lb/MWh	For Method 26A, collect a minimum of 3 dscm per run. For ASTM D6348–03 [2] or Method 320, sample for a minimum of 1 hour.
5. Liquid oil-fired unit—non-continental (excluding limited-use liquid oil-fired subcategory units).	a. Filterable particulate matter (PM).	2.0E–1 lb/MWh [1]	Collect a minimum of 1 dscm per run.
	OR	OR	
	Total HAP metals	7.0E–3 lb/MWh	Collect a minimum of 1 dscm per run.
	OR	OR	
	Individual HAP metals:		Collect a minimum of 3 dscm per run.
	Antimony (Sb)	8.0E–3 lb/GWh.	
	Arsenic (As)	6.0E–2 lb/GWh.	
	Beryllium (Be)	2.0E–3 lb/GWh.	
	Cadmium (Cd)	2.0E–3 lb/GWh.	
	Chromium (Cr)	2.0E–2 lb/GWh.	
	Cobalt (Co)	3.0E–1 lb/GWh.	
	Lead (Pb)	3.0E–2 lb/GWh.	
	Manganese (Mn)	1.0E–1 lb/GWh.	

TABLE 1 TO SUBPART UUUUU OF PART 63—EMISSION LIMITS FOR NEW OR RECONSTRUCTED EGUS—Continued

[As stated in § 63.9991, you must comply with the following applicable emission limit]

If your EGU is in this subcategory	For the following pollutants	You must meet the following emission limits and work practice standards	Using these requirements, as appropriate (e.g., specified sampling volume or test run duration) and limitations with the test methods in Table 5
	Nickel (Ni)	4.1E0 lb/GWh.	
	Selenium (Se)	2.0E–2 lb/GWh.	
	Mercury (Hg)	4.0E–4 lb/GWh	For Method 30B sample volume determination (Section 8.2.4), the estimated Hg concentration should nominally be < ½ the standard.
	b. Hydrogen chloride (HCl)	2.0E–3 lb/MWh	For Method 26A, collect a minimum of 1 dscm per run; for Method 26, collect a minimum of 120 liters per run. For ASTM D6348–03 [2] or Method 320, sample for a minimum of 1 hour.
	c. Hydrogen fluoride (HF)	5.0E–4 lb/MWh	For Method 26A, collect a minimum of 3 dscm per run. For ASTM D6348–03 [2] or Method 320, sample for a minimum of 1 hour.
6. Solid oil-derived fuel-fired unit	a. Filterable particulate matter (PM).	3.0E–2 lb/MWh [1]	Collect a minimum of 1 dscm per run.
	OR	OR	
	Total non-Hg HAP metals	6.0E–1 lb/GWh	Collect a minimum of 1 dscm per run.
	OR	OR	
	Individual HAP metals:		Collect a minimum of 3 dscm per run.
	Antimony (Sb)	8.0E–3 lb/GWh.	
	Arsenic (As)	3.0E–3 lb/GWh.	
	Beryllium (Be)	6.0E–4 lb/GWh.	
	Cadmium (Cd)	7.0E–4 lb/GWh.	
	Chromium (Cr)	6.0E–3 lb/GWh.	
	Cobalt (Co)	2.0E–3 lb/GWh.	
	Lead (Pb)	2.0E–2 lb/GWh.	
	Manganese (Mn)	7.0E–3 lb/GWh.	
	Nickel (Ni)	4.0E–2 lb/GWh.	
	Selenium (Se)	6.0E–3 lb/GWh.	
	b. Hydrogen chloride (HCl)	4.0E–4 lb/MWh	For Method 26A, collect a minimum of 3 dscm per run. For ASTM D6348–03 [2] or Method 320, sample for a minimum of 1 hour.
	OR		
	Sulfur dioxide (SO_2) [3]	1.0 lb/MWh	SO_2 CEMS.
	c. Mercury (Hg)	2.0E–3 lb/GWh	Hg CEMS or Sorbent trap monitoring system only.

[1] Gross electric output.
[2] Incorporated by reference, see § 63.14.
[3] You may not use the alternate SO_2 limit if your EGU does not have some form of FGD system (or, in the case of IGCC EGUs, some other acid gas removal system either upstream or downstream of the combined cycle block) and SO_2 CEMS installed.
[4] Duct burners on syngas; gross electric output.
[5] Duct burners on natural gas; gross electric output.

■ 20. Revise Table 4 to Subpart UUUUU of Part 63 to read as follows:

TABLE 4 TO SUBPART UUUUU OF PART 63—OPERATING LIMITS FOR EGUS

[As stated in §§ 63.9991, you must comply with the applicable operating limits]

If you demonstrate compliance using . . .	You must meet these operating limits . . .
1. PM CPMS for an existing EGU ..	Maintain the 30-boiler operating day rolling average PM CPMS output at or below the highest 1-hour average measured during the most recent performance test demonstrating compliance with the filterable PM, total non-mercury HAP metals (total HAP metals, for liquid oil-fired units), or individual non-mercury HAP metals (individual HAP metals including Hg, for liquid oil-fired units) emissions limitation(s).
2. PM CPMS for a new EGU	Maintain the 30-boiler operating day rolling average PM CPMS output determined in accordance with the requirements of § 63.10023(b)(2) and obtained during the most recent performance test run demonstrating compliance with the filterable PM, total non-mercury HAP metals (total HAP metals, for liquid oil-fired units), or individual non-mercury HAP metals (individual HAP metals including Hg, for liquid oil-fired units) emissions limitation(s).

■ 21. Revise footnote 4 of Table 5 to Subpart UUUUU of Part 63 to read as follows:

TABLE 5 TO SUBPART UUUUU OF PART 63—PERFORMANCE TESTING REQUIREMENTS

* * * * * * *

[4] When using ASTM D6348–03, the following conditions must be met: (1) The test plan preparation and implementation in the Annexes to ASTM D6348–03, Sections A1 through A8 are mandatory; (2) For ASTM D6348–03 Annex A5 (Analyte Spiking Technique), the percent (%)R must be determined for each target analyte (see Equation A5.5); (3) For the ASTM D6348–03 test data to be acceptable for a target analyte, %R must be 70% ≤ R ≤ 130%; and (4) The %R value for each compound must be reported in the test report and all field measurements corrected with the calculated %R value for that compound using the following equation:

■ 22. Revise Table 6 to Subpart UUUUU of Part 63 to read as follows:

TABLE 6 TO SUBPART UUUUU OF PART 63—ESTABLISHING PM CPMS OPERATING LIMITS

[As stated in § 63.10007, you must comply with the following requirements for establishing operating limits]

If you have an applicable emission limit for . . .	And you choose to establish PM CPMS operating limits, you must . . .	And . . .	Using . . .	According to the following procedures . . .
1. Filterable Particulate matter (PM), total non-mercury HAP metals, individual non-mercury HAP metals, total HAP metals, or individual HAP metals for an existing EGU.	Install, certify, maintain, and operate a PM CPMS for monitoring emissions discharged to the atmosphere according to § 63.10010(h)(1).	Establish a site-specific operating limit in units of PM CPMS output signal (*e.g.,* milliamps, mg/acm, or other raw signal).	Data from the PM CPMS and the PM or HAP metals performance tests.	1. Collect PM CPMS output data during the entire period of the performance tests. 2. Record the average hourly PM CPMS output for each test run in the three run performance test. 3. Determine the highest 1-hour average PM CPMS measured during the performance test demonstrating compliance with the filterable PM or HAP metals emissions limitations.

TABLE 6 TO SUBPART UUUUU OF PART 63—ESTABLISHING PM CPMS OPERATING LIMITS—Continued

[As stated in § 63.10007, you must comply with the following requirements for establishing operating limits]

If you have an applicable emission limit for . . .	And you choose to establish PM CPMS operating limits, you must . . .	And . . .	Using . . .	According to the following procedures . . .
2. Filterable Particulate matter (PM), total non-mercury HAP metals, individual non-mercury HAP metals, total HAP metals, or individual HAP metals for a new EGU.	Install, certify, maintain, and operate a PM CPMS for monitoring emissions discharged to the atmosphere according to § 63.10010(h)(1).	Establish a site-specific operating limit in units of PM CPMS output signal (*e.g.,* milliamps, mg/acm, or other raw signal).	Data from the PM CPMS and the PM or HAP metals performance tests.	1. Collect PM CPMS output data during the entire period of the performance tests. 2. Record the average hourly PM CPMS output for each test run in the performance test. 3. Determine the PM CPMS operating limit in accordance with the requirements of § 63.10023(b)(2) from data obtained during the performance test demonstrating compliance with the filterable PM or HAP metals emissions limitations.

■ 23. Revise Table 7 to Subpart UUUUU of Part 63 to read as follows:

TABLE 7 TO SUBPART UUUUU OF PART 63—DEMONSTRATING CONTINUOUS COMPLIANCE

[As stated in § 63.10021, you must show continuous compliance with the emission limitations for affected sources according to the following]

If you use one of the following to meet applicable emissions limits, operating limits, or work practice standards . . .	You demonstrate continuous compliance by . . .
1. CEMS to measure filterable PM, SO_2, HCl, HF, or Hg emissions, or using a sorbent trap monitoring system to measure Hg.	Calculating the 30- (or 90-) boiler operating day rolling arithmetic average emissions rate in units of the applicable emissions standard basis at the end of each boiler operating day using all of the quality assured hourly average CEMS or sorbent trap data for the previous 30- (or 90-) boiler operating days, excluding data recorded during periods of startup or shutdown.
2. PM CPMS to measure compliance with a parametric operating limit.	Calculating the 30- (or 90-) boiler operating day rolling arithmetic average of all of the quality assured hourly average PM CPMS output data (e.g., milliamps, PM concentration, raw data signal) collected for all operating hours for the previous 30- (or 90-) boiler operating days, excluding data recorded during periods of startup or shutdown.
3. Site-specific monitoring using CMS for liquid oil-fired EGUs for HCl and HF emission limit monitoring.	If applicable, by conducting the monitoring in accordance with an approved site-specific monitoring plan.
4. Quarterly performance testing for coal-fired, solid oil derived fired, or liquid oil-fired EGUs to measure compliance with one or more non-PM (or its alternative emission limits) applicable emissions limit in Table 1 or 2, or PM (or its alternative emission limits) applicable emissions limit in Table 2.	Calculating the results of the testing in units of the applicable emissions standard.
5. Conducting periodic performance tune-ups of your EGU(s).	Conducting periodic performance tune-ups of your EGU(s), as specified in § 63.10021(e).
6. Work practice standards for coal-fired, liquid oil-fired, or solid oil-derived fuel-fired EGUs during startup.	Operating in accordance with Table 3.
7. Work practice standards for coal-fired, liquid oil-fired, or solid oil-derived fuel-fired EGUs during shutdown.	Operating in accordance with Table 3.

■ 24. Revise Table 9 to Subpart UUUUU of Part 63 to read as follows:

TABLE 9 TO SUBPART UUUUU OF PART 63—APPLICABILITY OF GENERAL PROVISIONS TO SUBPART UUUUU

[As stated in § 63.10040, you must comply with the applicable General Provisions according to the following]

Citation	Subject	Applies to subpart UUUUU
§ 63.1	Applicability	Yes.
§ 63.2	Definitions	Yes. Additional terms defined in § 63.10042.
§ 63.3	Units and Abbreviations	Yes.
§ 63.4	Prohibited Activities and Circumvention.	Yes.
§ 63.5	Preconstruction Review and Notification Requirements.	Yes.
§ 63.6(a), (b)(1)–(b)(5), (b)(7), (c), (f)(2)–(3), (g), (h)(2)–(h)(9), (i), (j).	Compliance with Standards and Maintenance Requirements.	Yes.
§ 63.6(e)(1)(i)	General Duty to minimize emissions.	No. See § 63.10000(b) for general duty requirement.
§ 63.6(e)(1)(ii)	Requirement to correct malfunctions ASAP.	No.
§ 63.6(e)(3)	SSM Plan requirements	No.
§ 63.6(f)(1)	SSM exemption	No.
§ 63.6(h)(1)	SSM exemption	No.
§ 63.7(a), (b), (c), (d), (e)(2)–(e)(9), (f), (g), and (h).	Performance Testing Requirements.	Yes.
§ 63.7(e)(1)	Performance testing	No. See § 63.10007.
§ 63.8	Monitoring Requirements	Yes.
63.8(c)(1)(i)	General duty to minimize emissions and CMS operation.	No. See § 63.10000(b) for general duty requirement.
§ 63.8(c)(1)(iii)	Requirement to develop SSM Plan for CMS.	No.
§ 63.8(d)(3)	Written procedures for CMS	Yes, except for last sentence, which refers to an SSM plan. SSM plans are not required.
§ 63.9	Notification requirements	Yes, except for the 60-day notification prior to conducting a performance test in § 63.9(d); instead use a 30-day notification period per § 63.10030(d).
§ 63.10(a), (b)(1), (c), (d)(1)–(2), (e), and (f).	Recordkeeping and Reporting Requirements.	Yes, except for the requirements to submit written reports under § 63.10(e)(3)(v).
§ 63.10(b)(2)(i)	Recordkeeping of occurrence and duration of startups and shutdowns.	No.
§ 63.10(b)(2)(ii)	Recordkeeping of malfunctions	No. See 63.10001 for recordkeeping of (1) occurrence and duration and (2) actions taken during malfunction.
§ 63.10(b)(2)(iii)	Maintenance records	Yes.
§ 63.10(b)(2)(iv)	Actions taken to minimize emissions during SSM.	No.
§ 63.10(b)(2)(v)	Actions taken to minimize emissions during SSM.	No.
§ 63.10(b)(2)(vi)	Recordkeeping for CMS malfunctions.	Yes.
§ 63.10(b)(2)(vii)–(ix)	Other CMS requirements	Yes.
§ 63.10(b)(3),and (d)(3)–(5)		No.
§ 63.10(c)(7)	Additional recordkeeping requirements for CMS—identifying exceedances and excess emissions.	Yes.
§ 63.10(c)(8)	Additional recordkeeping requirements for CMS—identifying exceedances and excess emissions.	Yes.
§ 63.10(c)(10)	Recording nature and cause of malfunctions.	No. See 63.10032(g) and (h) for malfunctions recordkeeping requirements.
§ 63.10(c)(11)	Recording corrective actions	No. See 63.10032(g) and (h) for malfunctions recordkeeping requirements.
§ 63.10(c)(15)	Use of SSM Plan	No.
§ 63.10(d)(5)	SSM reports	No. See 63.10021(h) and (i) for malfunction reporting requirements.
§ 63.11	Control Device Requirements	No.
§ 63.12	State Authority and Delegation	Yes.
§ 63.13–63.16	Addresses, Incorporation by Reference, Availability of Information, Performance Track Provisions.	Yes.
§ 63.1(a)(5), (a)(7)–(a)(9), (b)(2), (c)(3)–(4), (d), 63.6(b)(6), (c)(3), (c)(4), (d), (e)(2), (e)(3)(ii), (h)(3), (h)(5)(iv), 63.8(a)(3), 63.9(b)(3), (h)(4), 63.10(c)(2)–(4), (c)(9).	Reserved	No.

■ 25. Revise sections 4.1 and 5.2.2.2 to Appendix A to Subpart UUUUU of Part 63 to read as follows:

Appendix A to Subpart UUUUU—Hg Monitoring Provisions

* * * * *

4.1 *Certification Requirements.* All Hg CEMS and sorbent trap monitoring systems and the additional monitoring systems used to continuously measure Hg emissions in units of the applicable emissions standard in accordance with this appendix must be certified in a timely manner, such that the initial compliance demonstration is completed no later than the applicable date in § 63.9984(f).

* * * * *

5.2.2.2 The same RATA performance criteria specified in Table A–2 for Hg CEMS also apply to the annual RATAs of the sorbent trap monitoring system.

* * * * *

■ 26. Revise section 3.1.2.1.3 and the heading to section 5.3.4 to Appendix B to Subpart UUUUU of Part 63 to read as follows:

Appendix B to Subpart UUUUU—HCl and HF Monitoring Provisions

* * * * *

3.1.2.1.3 For the ASTM D6348–03 test data to be acceptable for a target analyte, %R must be 70% ≤ R ≤ 130%; and

* * * * *

5.3.3 *Conditional Data Validation*

* * *

* * * * *

[FR Doc. 2013–07859 Filed 4–23–13; 8:45 am]

BILLING CODE 6560–50–P

ENVIRONMENTAL PROTECTION AGENCY

40 CFR Part 180

[EPA–HQ–OPP–2012–0282; FRL–9384–2]

Azoxystrobin; Pesticide Tolerances

AGENCY: Environmental Protection Agency (EPA).

ACTION: Final rule.

SUMMARY: This regulation establishes tolerances for residues of azoxystrobin in or on multiple commodities discussed later in this document. Syngenta Crop Protection, LLC requested these tolerances under the Federal Food, Drug, and Cosmetic Act (FFDCA).

DATES: This regulation is effective April 24, 2013. Objections and requests for hearings must be received on or before June 24, 2013, and must be filed in accordance with the instructions provided in 40 CFR part 178 (see also Unit I.C. of the **SUPPLEMENTARY INFORMATION**).

ADDRESSES: The docket for these actions, identified by docket identification (ID) number EPA–HQ–OPP–2012–0282, is available at *http://www.regulations.gov* or at the Office of Pesticide Programs Regulatory Public Docket (OPP Docket) in the Environmental Protection Agency Docket Center (EPA/DC), EPA West Bldg., Rm. 3334, 1301 Constitution Ave. NW., Washington, DC 20460–0001. The Public Reading Room is open from 8:30 a.m. to 4:30 p.m., Monday through Friday, excluding legal holidays. The telephone number for the Public Reading Room is (202) 566–1744, and the telephone number for the OPP Docket is (703) 305–5805. Please review the visitor instructions and additional information about the docket available at *http://www.epa.gov/dockets.*

FOR FURTHER INFORMATION CONTACT: Erin Malone, Registration Division (7505P), Office of Pesticide Programs, Environmental Protection Agency, 1200 Pennsylvania Ave. NW., Washington, DC 20460–0001; telephone number: (703) 347–0253; email address: *Malone.Erin@epa.gov.*

SUPPLEMENTARY INFORMATION:

I. General Information

A. Does this action apply to me?

You may be potentially affected by this action if you are an agricultural producer, food manufacturer, or pesticide manufacturer. The following list of North American Industrial Classification System (NAICS) codes is not intended to be exhaustive, but rather provides a guide to help readers determine whether this document applies to them. Potentially affected entities may include:

- Crop production (NAICS code 111).
- Animal production (NAICS code 112).
- Food manufacturing (NAICS code 311).
- Pesticide manufacturing (NAICS code 32532).

B. How can I get electronic access to other related information?

You may access a frequently updated electronic version of EPA's tolerance regulations at 40 CFR part 180 through the Government Printing Office's eCFR site at *http://www.ecfr.gov/cgi-bin/text-idx?&c=ecfr&tpl=/ecfrbrowse/Title40/40tab_02.tpl.*

C. How can I file an objection or hearing request?

Under FFDCA section 408(g), 21 U.S.C. 346a, any person may file an objection to any aspect of this regulation and may also request a hearing on those objections. You must file your objection or request a hearing on this regulation in accordance with the instructions provided in 40 CFR part 178. To ensure proper receipt by EPA, you must identify docket ID number EPA–HQ–OPP–2012–0282 in the subject line on the first page of your submission. All objections and requests for a hearing must be in writing, and must be received by the Hearing Clerk on or before June 24, 2013. Addresses for mail and hand delivery of objections and hearing requests are provided in 40 CFR 178.25(b).

In addition to filing an objection or hearing request with the Hearing Clerk as described in 40 CFR part 178, please submit a copy of the filing (excluding any Confidential Business Information (CBI)) for inclusion in the public docket. Information not marked confidential pursuant to 40 CFR part 2 may be disclosed publicly by EPA without prior notice. Submit the non-CBI copy of your objection or hearing request, identified by docket ID number EPA–HQ–OPP–2012–0282, by one of the following methods:

- *Federal eRulemaking Portal: http://www.regulations.gov.* Follow the online instructions for submitting comments. Do not submit electronically any information you consider to be CBI or other information whose disclosure is restricted by statute.
- *Mail:* OPP Docket, Environmental Protection Agency Docket Center (EPA/DC), (28221T), 1200 Pennsylvania Ave. NW., Washington, DC 20460–0001.
- *Hand Delivery:* To make special arrangements for hand delivery or delivery of boxed information, please follow the instructions at *http://www.epa.gov/dockets/contacts.htm.*

Additional instructions on commenting or visiting the docket, along with more information about dockets generally, is available at *http://www.epa.gov/dockets.*

II. Summary of Petitioned-For Tolerance

In the **Federal Register** of April 4, 2012 (77 FR 20336) (FRL–9340–4), EPA issued a document pursuant to FFDCA section 408(d)(3), 21 U.S.C. 346a(d)(3), announcing the filing of a pesticide petition (PP 1E7945) by Syngenta Crop Protection, LLC, P.O. Box 18300, Greensboro, NC 27419–8300. The petition requested that 40 CFR 180.507 be amended by establishing an import tolerance for residues of the fungicide azoxystrobin, [methyl(E)-2-(2-(6-(2-cyanophenoxy) pyrimidin-4-yloxy)phenyl)-3-methoxyacrylate], and the *Z*-isomer of azoxystrobin, [methyl(*Z*)-2-(2-(6-(2-

cyanophenoxy)pyrimidin-4-yloxy)phenyl)-3-methoxyacrylate] in or on ginseng extract (red ginseng extract and ginseng extract) at 0.5 parts per million (ppm). That document referenced a summary of the petition prepared by Syngenta Crop Protection, LLC, the registrant, which is available in the docket EPA–HQ–OPP–2012–0041, *http://www.regulations.gov.* There were no comments received in response to the notice of filing.

Additionally, in the **Federal Register** of May 23, 2012 (77 FR 30484) (FRL–9347–8), EPA issued a document pursuant to FFDCA section 408(d)(3), 21 U.S.C. 346a(d)(3), announcing the filing of pesticide petitions (PP 2F7976 and PP 2F7984) by Syngenta Crop Protection, LLC, P.O. Box 18300, Greensboro, NC 27419–8300. The petitions requested that 40 CFR 180.507 be amended by:

- Establishing tolerances for residues of the fungicide azoxystrobin, [methyl(E)-2-(2-(6-(2-cyanophenoxy) pyrimidin-4-yloxy)phenyl)-3-methoxyacrylate] and the *Z*-isomer of azoxystrobin, [methyl(*Z*)-2-(2-(6-(2-cyanophenoxy)pyrimidin-4-yloxy)phenyl)-3-methoxyacrylate], in or on oats, forage at 4 parts per million (ppm); oats, hay at 7 ppm; oats, straw at 3 ppm; oats, grain at 1 ppm; rye, forage at 4 ppm; rye, straw at 0.8 ppm; rye, grain at 0.07 ppm; poultry, meat at 0.01 ppm; poultry, liver at 0.2 ppm; poultry, fat at 0.01 ppm; egg at 0.1 ppm; cattle, liver at 0.5 ppm; cattle, kidney at 0.1 ppm; hog, liver at 0.2 ppm; hog, kidney at 0.03 ppm (PP 2F7976);

- Amending established tolerances for barley, hay from 15 ppm to 7 ppm; barley, straw from 7 ppm to 8 ppm; barley, grain from 3 ppm to 2 ppm; wheat, forage from 25 ppm to 10 ppm; wheat, straw from 4 ppm to 6 ppm; wheat, hay from 15 ppm to 20 ppm; grain aspirated fractions from 420 ppm to 460 ppm; cattle, fat from 0.03 ppm to 0.3 ppm; hog, fat from 0.01 ppm to 0.1 ppm; hog, meat from 0.01 ppm to 0.02 ppm; (PP 2F7984).

The notices referenced summaries of the petitions prepared by Syngenta Crop Protection, LLC, the registrant, which is available in the dockets EPA–HQ–OPP–2012–0282 and EPA–HQ–OPP–2012–0283, *http://www.regulations.gov.* There were no comments received in response to the notice of filing.

Based upon review of the data supporting the petition, EPA is establishing tolerances that vary from what the petitioner requested. The reason for these changes is explained in Unit IV.C.

III. Aggregate Risk Assessment and Determination of Safety

Section 408(b)(2)(A)(i) of FFDCA allows EPA to establish a tolerance (the legal limit for a pesticide chemical residue in or on a food) only if EPA determines that the tolerance is ''safe.'' Section 408(b)(2)(A)(ii) of FFDCA defines ''safe'' to mean that ''there is a reasonable certainty that no harm will result from aggregate exposure to the pesticide chemical residue, including all anticipated dietary exposures and all other exposures for which there is reliable information.'' This includes exposure through drinking water and in residential settings, but does not include occupational exposure. Section 408(b)(2)(C) of FFDCA requires EPA to give special consideration to exposure of infants and children to the pesticide chemical residue in establishing a tolerance and to ''ensure that there is a reasonable certainty that no harm will result to infants and children from aggregate exposure to the pesticide chemical residue.* * *''

Consistent with FFDCA section 408(b)(2)(D), and the factors specified in FFDCA section 408(b)(2)(D), EPA has reviewed the available scientific data and other relevant information in support of this action. EPA has sufficient data to assess the hazards of and to make a determination on aggregate exposure for azoxystrobin including exposure resulting from the tolerances established by this action. EPA's assessment of exposures and risks associated with azoxystrobin follows.

A. Toxicological Profile

EPA has evaluated the available toxicity data and considered its validity, completeness, and reliability as well as the relationship of the results of the studies to human risk. EPA has also considered available information concerning the variability of the sensitivities of major identifiable subgroups of consumers, including infants and children.

The toxicological profile for azoxystrobin has not changed since the final rule published in the **Federal Register** of July 13, 2012 (77 FR 41285) (FRL–9352–2). See that rule for a summary of the toxicological profile and references to supporting Agency documents that discuss specific information on the toxicity studies received and the nature of the adverse effects caused by azoxystrobin as well as the no-observed-adverse-effect-level (NOAEL) and the lowest-observed-adverse-effect-level (LOAEL).

B. Toxicological Points of Departure/ Levels of Concern

Once a pesticide's toxicological profile is determined, EPA identifies toxicological points of departure (POD) and levels of concern to use in evaluating the risk posed by human exposure to the pesticide. For hazards that have a threshold below which there is no appreciable risk, the toxicological POD is used as the basis for derivation of reference values for risk assessment. PODs are developed based on a careful analysis of the doses in each toxicological study to determine the dose at which no adverse effects are observed (the NOAEL) and the lowest dose at which adverse effects of concern are identified (the LOAEL). Uncertainty/ safety factors are used in conjunction with the POD to calculate a safe exposure level—generally referred to as a population-adjusted dose (PAD) or a reference dose (RfD)—and a safe margin of exposure (MOE). For non-threshold risks, the Agency assumes that any amount of exposure will lead to some degree of risk. Thus, the Agency estimates risk in terms of the probability of an occurrence of the adverse effect expected in a lifetime. For more information on the general principles EPA uses in risk characterization and a complete description of the risk assessment process, see *http://www.epa.gov/pesticides/factsheets/riskassess.htm.*

A summary of the toxicological endpoints for azoxystrobin used for human risk assessment is discussed in Unit III.B. of the final rule published in the **Federal Register** of July 13, 2012 (77 FR 41286) (FRL–9352–2).

C. Exposure Assessment

1. *Dietary exposure from food and feed uses.* In evaluating dietary exposure to azoxystrobin, EPA considered exposure under the petitioned-for tolerances as well as all existing azoxystrobin tolerances in 40 CFR 180.507. EPA assessed dietary exposures from azoxystrobin in food as follows:

i. *Acute exposure.* Quantitative acute dietary exposure and risk assessments are performed for a food-use pesticide, if a toxicological study has indicated the possibility of an effect of concern occurring as a result of a 1-day or single exposure.

Such effects were identified for azoxystrobin. In estimating acute dietary exposure, EPA used food consumption information from the United States Department of Agriculture's (USDA) National Health and Nutrition Examination Survey, What We Eat in

America (NHANES/WWEIA) conducted from 2003 to 2008. As to residue levels in food, the acute dietary exposure assessment of azoxystrobin is partially refined by using highest residue values for citrus fruits and assuming tolerance-level residues for all other existing and proposed commodities. One hundred percent of the crops were assumed treated with azoxystrobin and DEEM (Dietary Exposure Evaluation Model) version 7.81 default processing factors were used except where tolerances were established for processed commodities.

ii. *Chronic exposure.* In conducting the chronic dietary exposure assessment, EPA used the food consumption data from the USDA's (NHANES/WWEIA) conducted from 2003 to 2008, as well. As to residue levels in food, a slightly refined chronic dietary analysis for azoxystrobin was conducted using tolerance-level residues and average percent crop treated estimates when available. DEEM version 7.81 default processing factors were assumed except for where tolerances were established for processed commodities or when processing studies show no concentration. An updated screening level usage analysis (SLUA) of azoxystrobin from 2011 was used for percent crop treated.

iii. *Cancer.* The rat and the mouse carcinogenicity studies on azoxystrobin do not show an increase in tumor incidence. Azoxystrobin is classified as ''not likely to be carcinogenic to humans.'' Therefore, a dietary exposure assessment for the purpose of assessing cancer risk is unnecessary.

iv. *Anticipated or actual residues and percent crop treated (PCT) information.* Section 408(b)(2)(E) of FFDCA authorizes EPA to use available data and information on the anticipated residue levels of pesticide residues in food and the actual levels of pesticide residues that have been measured in food. If EPA relies on such information, EPA must require pursuant to FFDCA section 408(f)(1) that data be provided 5 years after the tolerance is established, modified, or left in effect, demonstrating that the levels in food are not above the levels anticipated. For the present action, EPA will issue such Data Call-Ins as are required by FFDCA section 408(b)(2)(E) and authorized under FFDCA section 408(f)(1). Data will be required to be submitted no later than 5 years from the date of issuance of these tolerances.

Section 408(b)(2)(F) of FFDCA states that the Agency may use data on the actual percent of food treated for assessing chronic dietary risk only if:

- Condition a: The data used are reliable and provide a valid basis to show what percentage of the food derived from such crop is likely to contain the pesticide residue.
- Condition b: The exposure estimate does not underestimate exposure for any significant subpopulation group.
- Condition c: Data are available on pesticide use and food consumption in a particular area, the exposure estimate does not understate exposure for the population in such area.

In addition, the Agency must provide for periodic evaluation of any estimates used. To provide for the periodic evaluation of the estimate of PCT as required by FFDCA section 408(b)(2)(F), EPA may require registrants to submit data on PCT.

The Agency estimated the PCT for existing uses as follows: Almonds, 25%; apricots, 10%; artichokes, 25%; asparagus, 2.5%; green beans, 10%; blackberries, 5%; blueberries, 10%; broccoli, 5%; cabbage, 10%; cantaloupes, 10%; carrots, 10%; cauliflower, 2.5%; celery, 10%; cherries, 5%; corn, 2.5%; cotton, 5%; cucumbers, 20%; dry beans/peas, 1%; garlic, 60%; grapefruit, 20%; grapes, 5%; hazelnuts (filberts), 5%; lettuce, 2.5%; onions, 10%; oranges, 5%; peaches, 5%; peanuts, 15%; green peas, 2.5%; pecans, 2.5%; peppers, 15%; pistachios, 15%; potatoes, 35%; prunes, 2.5%; pumpkins, 20%; raspberries, 5%; rice, 35%; soybeans, 2.5%; spinach, 10%; squash, 15%; strawberries, 30%; sugar beets, 5%; sweet corn, 10%; tangerines, 15%; tomatoes, 15%; walnuts, 1%; watermelon, 20%; and wheat, 2.5%.

In most cases, EPA uses available data from United States Department of Agriculture/National Agricultural Statistics Service (USDA/NASS), proprietary market surveys, and the National Pesticide Use Database for the chemical/crop combination for the most recent 6–7 years. EPA uses an average PCT for chronic dietary risk analysis. The average PCT figure for each existing use is derived by combining available public and private market survey data for that use, averaging across all observations, and rounding to the nearest 5%, except for those situations in which the average PCT is less than 1%. In those cases, 1% is used as the average PCT and 2.5% is used as the maximum PCT. EPA uses a maximum PCT for acute dietary risk analysis. The maximum PCT figure is the highest observed maximum value reported within the recent 6 years of available public and private market survey data for the existing use and rounded up to the nearest multiple of 5%.

The Agency believes that the three conditions discussed in Unit III.C.1.iv. have been met. With respect to Condition a, PCT estimates are derived from Federal and private market survey data, which are reliable and have a valid basis. The Agency is reasonably certain that the percentage of the food treated is not likely to be an underestimation. As to Conditions b and c, regional consumption information and consumption information for significant subpopulations is taken into account through EPA's computer-based model for evaluating the exposure of significant subpopulations including several regional groups. Use of this consumption information in EPA's risk assessment process ensures that EPA's exposure estimate does not understate exposure for any significant subpopulation group and allows the Agency to be reasonably certain that no regional population is exposed to residue levels higher than those estimated by the Agency. Other than the data available through national food consumption surveys, EPA does not have available reliable information on the regional consumption of food to which azoxystrobin may be applied in a particular area.

2. *Dietary exposure from drinking water.* The Agency used screening level water exposure models in the dietary exposure analysis and risk assessment for azoxystrobin in drinking water. These simulation models take into account data on the physical, chemical, and fate/transport characteristics of azoxystrobin. Further information regarding EPA drinking water models used in pesticide exposure assessment can be found at *http://www.epa.gov/oppefed1/models/water/index.htm.*

Based on the First Index Reservoir Screening Tool (FIRST), the highest estimated drinking water concentrations (EDWCs) of azoxystrobin for acute exposures are estimated to be 173 parts per billion (ppb) for surface water and 33 ppb for chronic exposures for non-cancer assessments. Based on the Screening Concentration in Groundwater, version 2.3, August 8, 2003 (SCI-GROW), the EDWC for ground water is 3.1 ppb for all exposures.

Modeled estimates of drinking water concentrations were directly entered into the dietary exposure model. For acute dietary risk assessment, the water concentration value of 173 ppb was used to assess the contribution to drinking water. For chronic dietary risk assessment, the water concentration value of 33 ppb was used to assess the contribution to drinking water.

3. *From non-dietary exposure.* The term ''residential exposure'' is used in

this document to refer to non-occupational, non-dietary exposure (e.g., for lawn and garden pest control, indoor pest control, termiticides, and flea and tick control on pets). Azoxystrobin is currently registered for the following uses that could result in residential exposures: Outdoor residential (lawns, ornamentals, flower gardens, vegetables, fruit and nut trees, berries and vines) and recreational (golf courses, parks and athletic fields) sites. Additionally, azoxystrobin is registered for uses on indoor carpets/other surfaces, and in treated paints (preservative incorporation). EPA assessed residential exposure using the following assumptions:

• Residential uses will result in short-term (1 to 30 days) handler exposure; residential handlers are assumed to be wearing short-sleeved shirts, short pants, shoes, and socks during the application; and because there was no dermal endpoint chosen for azoxystrobin, residential handler risk from exposure was assessed for the inhalation route only.

• The Agency assumed that post-application exposure in residential settings is expected to be short-term in duration only. Residential post-application inhalation exposure in outdoor settings is considered negligible; however, residential post-application inhalation exposure in indoor settings has been assessed for adults and children.

Further information regarding EPA's standard assumptions and generic inputs for residential exposures may be found at *http://www.epa.gov/pesticides/trac/science/trac6a05.pdf.*

4. *Cumulative effects from substances with a common mechanism of toxicity.* Section 408(b)(2)(D)(v) of FFDCA requires that, when considering whether to establish, modify, or revoke a tolerance, the Agency consider ''available information'' concerning the cumulative effects of a particular pesticide's residues and ''other substances that have a common mechanism of toxicity.''

EPA has not found azoxystrobin to share a common mechanism of toxicity with any other substances, and azoxystrobin does not appear to produce a toxic metabolite produced by other substances. For the purposes of this tolerance action, therefore, EPA has assumed that azoxystrobin does not have a common mechanism of toxicity with other substances. For information regarding EPA's efforts to determine which chemicals have a common mechanism of toxicity and to evaluate the cumulative effects of such chemicals, see EPA's Web site at *http://www.epa.gov/pesticides/cumulative.*

D. Safety Factor for Infants and Children

1. *In general.* Section 408(b)(2)(C) of FFDCA provides that EPA shall apply an additional tenfold (10X) margin of safety for infants and children in the case of threshold effects to account for prenatal and postnatal toxicity and the completeness of the database on toxicity and exposure unless EPA determines based on reliable data that a different margin of safety will be safe for infants and children. This additional margin of safety is commonly referred to as the FQPA Safety Factor (SF). In applying this provision, EPA either retains the default value of 10X, or uses a different additional safety factor when reliable data available to EPA support the choice of a different factor.

2. *Prenatal and postnatal sensitivity.* The prenatal and postnatal toxicity database for azoxystrobin is complete and includes prenatal developmental toxicity studies in rats and rabbits and a 2-generation study in rats. In these studies, offspring toxicity was observed at equivalent or higher doses than those resulting in parental toxicity; thus, there is no evidence of increased susceptibility and there are no residual uncertainties with regards to prenatal and/or postnatal toxicity.

3. *Conclusion.* EPA has retained the FQPA SF, reduced to 3X, in assessing acute dietary risk. An additional safety factor is needed for acute risk assessment to account for the use of a LOAEL from the acute neurotoxicity study in rats in deriving the acute reference dose used for assessing acute dietary exposure for all populations including infants and children. To account for the use of a LOAEL from the acute neurotoxicity study in rats, the Agency believes that a 3X FQPA SF (as opposed to a 10X) will be adequate to extrapolate a NOAEL in assessing acute risk based on the following considerations:

• The effect seen (transient diarrhea seen in the rat) is of a nature that is relatively insignificant;

• The diarrhea was only seen in studies involving gavage dosing in the rat but not in repeat dosing through dietary administration in rats and mice, and not through gavage dosing in rabbits; and

• The very high dose level needed to reach the acute oral lethal dose $(LD)_{50}$ (>5,000 milligrams/kilogram (mg/kg)), and the overall low toxicity of azoxystrobin.

However, EPA has determined that reliable data show that it would be safe for infants and children to reduce the FQPA safety factor to 1X for short-term, intermediate-term, and chronic risk assessment. This determination is based on the following considerations.

i. The toxicity database for azoxystrobin is complete except for immunotoxicity. Changes to 40 CFR part 158 make immunotoxicity testing (OPPTS Guideline 870.7800) required for pesticide registration; however, the existing data are sufficient for endpoint selection for exposure/risk assessment scenarios, and for evaluation of the requirements under the FQPA. There are no indications in the available studies that organs associated with immune function, such as the thymus and spleen, are affected by azoxystrobin and azoxystrobin does not belong to a class of chemicals that would be expected to be immunotoxic. Based on the above considerations, EPA does not believe that conducting the immunotoxicity study will result in a dose less than the point of departure already used in this risk assessment and an additional database uncertainty factor for potential immunotoxicity does not need to be applied.

ii. Clinical signs, including transient diarrhea and decreased body weight, body weight gain, and food utilization, were noted in the acute and subchronic neurotoxicity studies, but were not considered indicative of neurotoxicity. There is no need for a developmental neurotoxicity study or additional UFs to account for neurotoxicity.

iii. There is no evidence that azoxystrobin results in increased susceptibility to *in utero* rats or rabbits in the prenatal developmental studies or in young rats in the 2-generation reproduction study.

iv. There are no residual uncertainties in the azoxystrobin exposure database. While some refinements were incorporated into the dietary exposure calculations, EPA is confident that the aggregate risk from exposure to azoxystrobin in food, drinking water, and residential pathways will not be underestimated. The acute dietary (food) exposure assessment utilized conservative upper-bound inputs including 100% of the proposed and registered crops treated, and tolerance-level residues for all existing and proposed commodities, except citrus fruits where the highest field trial residue was used as a refinement. The chronic dietary exposure assessment was partially refined, and used tolerance-level residues for all commodities and PCT estimates when available (SLUA, 07/13/11). Although the acute and chronic assessments included minor refinements, the use of

field trial and PCT estimates ensures that actual exposures/risks from residues in food will not be underestimated. The drinking water assessment utilized water concentration values generated by models and associated modeling parameters which are designed to produce conservative, health protective, high-end estimates of water concentrations which are not likely to be exceeded. The dietary (food and drinking water) exposure assessment does not underestimate the potential exposure for infants, children, or women of child-bearing age.

In addition, the residential exposure assessment is based on the updated 2012 Residential SOPs employing surrogate study data, including conservative exposure assumptions based on Day 0 dermal/oral contact to turf and surfaces treated at the maximum application rate. These data are reliable and are not expected to underestimate risks to adults or children. The Residential SOPs are based upon reasonable ''worst-case'' assumptions and are not expected to underestimate risk.

E. Aggregate Risks and Determination of Safety.

EPA determines whether acute and chronic dietary pesticide exposures are safe by comparing aggregate exposure estimates to the aPAD and cPAD. For linear cancer risks, EPA calculates the lifetime probability of acquiring cancer given the estimated aggregate exposure. Short-, intermediate-, and chronic-term risks are evaluated by comparing the estimated aggregate food, water, and residential exposure to the appropriate PODs to ensure that an adequate MOE exists.

1. *Acute risk.* Using the exposure assumptions discussed in this unit for acute exposure, the acute aggregate risk would be equivalent to the acute dietary exposure from food and water to azoxystrobin will occupy 41% of the aPAD for children 1–2 years old, the population group receiving the greatest exposure.

2. *Chronic risk.* Based on the explanation in Unit III.C.3., regarding residential use patterns, chronic residential exposure to residues of azoxystrobin is not expected. Therefore, the chronic aggregate risk would be equivalent to the chronic dietary exposure estimate and was 17% of the cPAD for the most highly exposed subgroup, children 1–2 years old.

3. *Short-term risk.* Short-term aggregate exposure takes into account short-term residential exposure plus chronic exposure to food and water (considered to be a background exposure level). Azoxystrobin is currently registered for uses that could result in short-term residential exposure, and the Agency has determined that it is appropriate to aggregate chronic exposure through food and water with short-term residential exposures to azoxystrobin.

Using the exposure assumptions described in this unit for short-term exposures, EPA has concluded the combined short-term food, water, and residential exposures result in aggregate MOEs of 920 for general U.S. population and 190 for children 1 to 2 years old. Because EPA's level of concern for azoxystrobin is a MOE of 100 or below, these MOEs are not of concern.

4. *Intermediate-term risk.* Intermediate-term aggregate exposure takes into account intermediate-term residential exposure plus chronic exposure to food and water (considered to be a background exposure level). Azoxystrobin is not registered for any use patterns that would result in intermediate-term residential exposure. Therefore, EPA relies on chronic dietary exposure to evaluate intermediate-term aggregate risk.

5. *Aggregate cancer risk for U.S. population.* Based on the lack of evidence of carcinogenicity in two adequate rodent carcinogenicity studies, azoxystrobin is not expected to pose a cancer risk to humans.

6. *Determination of safety.* Based on these risk assessments, EPA concludes that there is a reasonable certainty that no harm will result to the general population, or to infants and children from aggregate exposure to azoxystrobin residues.

IV. Other Considerations

A. Analytical Enforcement Methodology

Adequate enforcement methodologies are available to enforce the tolerance expression and have been submitted to FDA for inclusion in the Pesticide Analytical Manual (PAM) Volume II: A gas chromatography method with nitrogen-phosphorus detection (GC/NPD), RAM 243/04, for the enforcement of tolerances for residues of azoxystrobin and its Z-isomer in crop commodities; and a GC/NPD method, RAM 255/01, for the enforcement of tolerances of azoxystrobin in livestock commodities.

The methods may be requested from: Chief, Analytical Chemistry Branch, Environmental Science Center, 701 Mapes Rd., Ft. Meade, MD 20755–5350; telephone number: (410) 305–2905; email address: *residuemethods@epa.gov.*

B. International Residue Limits

In making its tolerance decisions, EPA seeks to harmonize U.S. tolerances with international standards whenever possible, consistent with U.S. food safety standards and agricultural practices. EPA considers the international maximum residue limits (MRLs) established by the Codex Alimentarius Commission (Codex), as required by FFDCA section 408(b)(4). The Codex Alimentarius is a joint United Nations Food and Agriculture Organization/World Health Organization food standards program, and it is recognized as an international food safety standards-setting organization in trade agreements to which the United States is a party. EPA may establish a tolerance that is different from a Codex MRL; however, FFDCA section 408(b)(4) requires that EPA explain the reasons for departing from the Codex level.

The Codex has not established MRLs for azoxystrobin on oat, forage; oat, hay; rye, forage; barley, hay; wheat, forage; wheat, hay; and grain aspirated fractions.

The Codex has established MRLs for azoxystrobin in or on ginseng, dried including red ginseng at 0.5 ppm; rye, grain at 0.2 ppm and wheat, grain at 0.2 ppm. These MRLs are the same as the tolerances established for azoxystrobin in the United States.

The Codex has established MRLs for azoxystrobin in or on oats, grain at 0.5 ppm and barley, grain at 0.5 ppm. These MRLs are different than the tolerances established for azoxystrobin in the United States. The U.S. tolerance on oat grain (1.5 ppm) and barley grain (3 ppm) could not be harmonized since the Codex MRLs are lower. Setting the U.S. tolerance to be consistent with the Codex MRLs might lead to residues in excess of the tolerance, despite legal use of the pesticide in accordance with the registered label.

C. Revisions to Petitioned-For Tolerances

The tolerance levels requested by the petitioners are based on residue data submitted using lower application rates than are found on the registered label; therefore, EPA used the proportionality principle (JMPR Report 2011) to estimate residue values that reflect the higher application rates on the registered label. In doing this exercise, EPA determined that an adjustment to the wheat, grain tolerance was required to reflect the application rates for the pesticide.

The proposed tolerance on ginseng extract (red ginseng extract and ginseng

extract) is not needed because the tolerance on ginseng will cover the expected residues in these processed commodities.

The proposed amended tolerance for grain aspirated fractions is not needed due to the current tolerance being sufficient. EPA is not establishing the tolerances as proposed for livestock commodities as there was no increased dietary burden on livestock with the new uses, the existing tolerances were sufficient.

The tolerance expression in 40 CFR 180.507(a)(2) is incorrect and was revised.

V. Conclusion

Therefore, tolerances are established for residues of azoxystrobin, [methyl(E)-2-(2-(6-(2-cyanophenoxy) pyrimidin-4-yloxy)phenyl)-3-methoxyacrylate and the *Z*-isomer of azoxystrobin, [methyl(*Z*)-2-(2-(6-(2-cyanophenoxy)pyrimidin-4-yloxy)phenyl)-3-methoxyacrylate], in or on oat, forage at 5.0 ppm; oat, hay at 10.0 ppm; oat, straw at 3.0 ppm; oat, grain at 1.5 ppm; rye, forage at 7.0 ppm; rye, straw at 1.5 ppm; rye, grain at 0.2 ppm; barley, hay at 10.0 ppm; barley, straw 15.0 ppm; wheat, forage from at 15.0 ppm; wheat, straw at 10.0 ppm; wheat, hay at 30.0 ppm; and wheat, grain at 0.2 ppm. In conjunction with establishment of the wheat grain tolerance at 0.2 ppm, the existing tolerance on wheat bran needs to be deleted from 40 CFR 180.507(a)(1).

Also, EPA is establishing a tolerance for residues of azoxystrobin [methyl(E)-2-(2-(6-(2-cyanophenoxy) pyrimidin-4-yloxy)phenyl)-3-methoxyacrylate] and the *Z*-isomer of azoxystrobin, [methyl(*Z*)-2-(2-(6-(2-cyanophenoxy)pyrimidin-4-yloxy)phenyl)-3-methoxyacrylate], in or on ginseng at 0.5 ppm. Although, as of the date of publication of this rule, there are no U.S. registrations for use of azoxystrobin on ginseng, this tolerance will allow for imports of treated ginseng meeting this tolerance level.

VI. Statutory and Executive Order Reviews

This final rule establishes tolerances under FFDCA section 408(d) in response to a petition submitted to the Agency. The Office of Management and Budget (OMB) has exempted these types of actions from review under Executive Order 12866, entitled ''Regulatory Planning and Review'' (58 FR 51735, October 4, 1993). Because this final rule has been exempted from review under Executive Order 12866, this final rule is not subject to Executive Order 13211, entitled ''Actions Concerning Regulations That Significantly Affect Energy Supply, Distribution, or Use'' (66 FR 28355, May 22, 2001) or Executive Order 13045, entitled ''Protection of Children from Environmental Health Risks and Safety Risks'' (62 FR 19885, April 23, 1997). This final rule does not contain any information collections subject to OMB approval under the Paperwork Reduction Act (PRA) (44 U.S.C. 3501 *et seq.*), nor does it require any special considerations under Executive Order 12898, entitled ''Federal Actions to Address Environmental Justice in Minority Populations and Low-Income Populations'' (59 FR 7629, February 16, 1994).

Since tolerances and exemptions that are established on the basis of a petition under FFDCA section 408(d), such as the tolerance in this final rule, do not require the issuance of a proposed rule, the requirements of the Regulatory Flexibility Act (RFA) (5 U.S.C. 601 *et seq.*), do not apply.

This final rule directly regulates growers, food processors, food handlers, and food retailers, not States or tribes, nor does this action alter the relationships or distribution of power and responsibilities established by Congress in the preemption provisions of FFDCA section 408(n)(4). As such, the Agency has determined that this action will not have a substantial direct effect on States or tribal governments, on the relationship between the national government and the States or tribal governments, or on the distribution of power and responsibilities among the various levels of government or between the Federal Government and Indian tribes. Thus, the Agency has determined that Executive Order 13132, entitled ''Federalism'' (64 FR 43255, August 10, 1999) and Executive Order 13175, entitled ''Consultation and Coordination with Indian Tribal Governments'' (65 FR 67249, November 9, 2000) do not apply to this final rule. In addition, this final rule does not impose any enforceable duty or contain any unfunded mandate as described under Title II of the Unfunded Mandates Reform Act of 1995 (UMRA) (2 U.S.C. 1501 *et seq.*).

This action does not involve any technical standards that would require Agency consideration of voluntary consensus standards pursuant to section 12(d) of the National Technology Transfer and Advancement Act of 1995 (NTTAA) (15 U.S.C. 272 note).

VII. Congressional Review Act

Pursuant to the Congressional Review Act (5 U.S.C. 801 *et seq.*), EPA will submit a report containing this rule and other required information to the U.S. Senate, the U.S. House of Representatives, and the Comptroller General of the United States prior to publication of the rule in the **Federal Register**. This action is not a ''major rule'' as defined by 5 U.S.C. 804(2).

List of Subjects in 40 CFR Part 180

Environmental protection, Administrative practice and procedure, Agricultural commodities, Pesticides and pests, Reporting and recordkeeping requirements.

Dated: April 12, 2013.

Daniel J. Rosenblatt,

Acting Director, Registration Division, Office of Pesticide Programs.

Therefore, 40 CFR chapter I is amended as follows:

PART 180—[AMENDED]

■ 1. The authority citation for part 180 continues to read as follows:

Authority: 21 U.S.C. 321(q), 346a and 371.

■ 2. In § 180.507:

■ a. Revise the entries for ''Barley, hay'', ''Barley, straw'', ''Wheat, grain'', ''Wheat, hay'', ands ''Wheat, straw'' in the table in paragraph (a)(1);

■ b. Add alphabetically the entries for ''Ginseng'', ''Oats, forage'', ''Oats, grain'', ''Oats, hay'', ''Oats, straw'', ''Rye, forage'', ''Rye, grain'', ''Rye, straw'' to the table in paragraph (a)(1);

■ c. Remove the entry in the table in paragraph (a)(1) for ''Wheat, bran'';

■ d. Add footnote 1 to the table in paragraph (a)(1); and

■ e. Revise the introductory text of paragraph (a)(2)

The revisions and additions read as follows:

§ 180.507 Azoxystrobin; tolerances for residues.

(a) * * *

(1) * * *

Commodity	Parts per million
* * * * *	
Barley, hay	10.0
Barley, straw	15.0
* * * * *	
Ginseng [1]	0.5
* * * * *	
Oats, forage	5.0
Oats, grain	1.5
Oats, hay	10.0
Oats, straw	3.0
* * * * *	
Rye, forage	7.0
Rye, grain	0.2
Rye, straw	1.5

Commodity	Parts per million
* * * * *	
Wheat, grain	0.2
Wheat, hay	30.0
Wheat, straw	10.0

[1] There are no United States registrations for use of azoxystrobin on ginseng.

(2) Tolerances are established for residues of the fungicide, azoxystrobin, including its metabolites and degradates, in or on the commodities in the following table. Compliance with the tolerance levels specified in the table is to be determined by measuring only azoxystrobin, [methyl(*E*)-2-(2-(6-(2-cyanophenoxy) pyrimidin-4-yloxy)phenyl)-3-methoxyacrylate] in or on the commodity.

* * * * *

[FR Doc. 2013–09701 Filed 4–23–13; 8:45 am]

BILLING CODE 6560–50–P

Proposed Rules

Federal Register

Vol. 78, No. 79

Wednesday, April 24, 2013

This section of the FEDERAL REGISTER contains notices to the public of the proposed issuance of rules and regulations. The purpose of these notices is to give interested persons an opportunity to participate in the rule making prior to the adoption of the final rules.

DEPARTMENT OF ENERGY

Federal Energy Regulatory Commission

18 CFR Part 40

[Docket No. RM12–16–000]

Generator Requirements at the Transmission Interface

AGENCY: Federal Energy Regulatory Commission, DOE.

ACTION: Notice of proposed rulemaking.

SUMMARY: Pursuant to section 215 of the Federal Power Act (FPA),[1] the Commission proposes to approve modifications to four existing Reliability Standards as submitted by the North American Electric Reliability Corporation (NERC), the Commission certified Electric Reliability Organization. Specifically, the Commission is proposing to approve Reliability Standards FAC–001–1 (Facility Connection Requirements), FAC–003–3 (Transmission Vegetation Management), PRC–004–2.1a (Analysis and Mitigation of Transmission and Generation Protection System Misoperations), and PRC–005–1.1b (Transmission and Generation Protection System Maintenance and Testing). The proposed modifications improve reliability either by extending their applicability to certain generator interconnection facilities, or by clarifying that the existing Reliability Standard is and remains applicable to generator interconnection facilities. The Commission also proposes to approve the related Violation Risk Factors and Violation Severity Levels, as well as the implementation plan and effective dates proposed by NERC.

DATES: Comments are due June 24, 2013.

ADDRESSES: Comments, identified by docket number, may be filed in the following ways:

- Electronic Filing through *http://www.ferc.gov.* Documents created electronically using word processing software should be filed in native applications or print-to-PDF format and not in a scanned format.
- *Mail/Hand Delivery:* Those unable to file electronically may mail or hand-deliver comments to: Federal Energy Regulatory Commission, Secretary of the Commission, 888 First Street NE., Washington, DC 20426.

Instructions: For detailed instructions on submitting comments and additional information on the rulemaking process, see the Comment Procedures Section of this document.

FOR FURTHER INFORMATION CONTACT: Stephanie Schmidt (Technical Information), Office of Electric Reliability, Division of Reliability Standards, Federal Energy Regulatory Commission, 888 First Street NE., Washington, DC 20426, (202) 502–6568, *Stephanie.Schmidt@ferc.gov;* Julie Greenisen (Legal Information), Office of the General Counsel, Federal Energy Regulatory Commission, 888 First Street NE., Washington, DC 20426, (202) 502–6362, *julie.greenisen@ferc.gov.*

SUPPLEMENTARY INFORMATION:

Notice of Proposed Rulemaking

(Issued April 18, 2013)

1. Pursuant to section 215 of the Federal Power Act (FPA),[2] the Commission proposes to approve modifications to four existing Reliability Standards as submitted by the North American Electric Reliability Corporation (NERC), the Commission certified Electric Reliability Organization. Specifically, the Commission is proposing to approve Reliability Standards FAC–001–1 (Facility Connection Requirements), FAC–003–3 (Transmission Vegetation Management), PRC–004–2.1a (Analysis and Mitigation of Transmission and Generation Protection System Misoperations), and PRC–005–1.1b (Transmission and Generation Protection System Maintenance and Testing). The proposed modifications improve reliability either by extending their applicability to certain generator interconnection facilities, or by clarifying that the existing Reliability Standard is and remains applicable to generator interconnection facilities. The Commission also proposes to approve the related Violation Risk Factors and Violation Severity Levels, as well as the implementation plan and effective dates proposed by NERC.

I. Background

A. Regulatory Background—Section 215 of the FPA

2. Section 215 of the FPA requires a Commission-certified Electric Reliability Organization (ERO) to develop mandatory and enforceable Reliability Standards, which are subject to Commission review and approval.[3] Once approved, the Reliability Standards may be enforced by the ERO subject to Commission oversight, or by the Commission independently.[4]

3. In 2006, the Commission established a process to select and certify an ERO[5] and, subsequently, certified NERC as the ERO.[6] In 2007, as part of Order No. 693, the Commission approved 83 Reliability Standards submitted by NERC, including initial versions of Reliability Standards FAC–001, FAC–003, PRC–004, and PRC–005.[7] Further, in Order No. 693, the Commission approved NERC's compliance registry process, including NERC's Statement of Compliance Registry Criteria (Registry Criteria), which describes how NERC and the Regional Entities[8] will identify the entities that should be registered for compliance with mandatory Reliability Standards.[9] While that process allows a Regional Entity to register an entity over its objection, NERC's Rules of Procedure provide a mechanism for such an entity to seek NERC review of the Regional

[1] 16 U.S.C. 824o (2006).

[2] 16 U.S.C. 824o (2006).

[3] *Id.* 824o(c) and (d).

[4] *See id.* 824o(e).

[5] *Rules Concerning Certification of the Electric Reliability Organization; and Procedures for the Establishment, Approval and Enforcement of Electric Reliability Standards,* Order No. 672, FERC Stats. & Regs. ¶ 31,204, *order on reh'g,* Order No. 672–A, FERC Stats. & Regs. ¶ 31,212 (2006).

[6] *North American Electric Reliability Corp.,* 116 FERC ¶ 61,062, *order on reh'g & compliance,* 117 FERC ¶ 61,126 (2006), *aff'd sub nom., Alcoa, Inc.* v. *FERC,* 564 F.3d 1342 (DC Cir. 2009).

[7] *Mandatory Reliability Standards for the Bulk Power System,* Order No. 693, 72 Fed. Reg. 16416 (April 4, 2007), FERC Stats. & Regs. ¶ 31,242 (2007), *order on reh'g,* Order No. 693–A, 120 FERC ¶ 61,053 (2007).

[8] NERC is authorized to delegate certain authority to regional entities as prescribed by FPA section 215(e)(4). *See* 16 U.S.C. 824o(e)(4).

[9] Order No. 693, FERC Stats. & Regs. ¶ 31,242 at PP 92–95. The Commission has approved subsequent amendments to the Registry Criteria. *See, e.g., North American Electric Reliability Corp.,* 122 FERC ¶ 61,101 (2008).

Entity's registration decision and, ultimately, to appeal to the Commission if NERC upholds the Regional Entity's decision.[10]

B. Related Commission Orders and Genesis of Project 2010–07

4. In several fact-specific cases on appeal from a NERC registration determination, the Commission has addressed the need to apply Reliability Standard requirements, otherwise generally applicable to a registered transmission owner or transmission operator, to the owner or operator of a significant generator interconnection facility or tie-line. In *New Harquahala Generating Co., LLC,* 123 FERC ¶ 61,173 (2008) (*Harquahala*), the Commission upheld NERC's registration of New Harquahala Generating Company (Harquahala) as a transmission owner and transmission operator, agreeing that Harquahala's 26-mile, 500 kV generator tie-line was ''material to the reliability of the bulk power system.''[11] The Commission went into some detail concerning the impact on the transmission network of an event on Harquahala's facilities,[12] and noted that it was affirming the Western Electric Coordinating Council's (WECC's) and NERC's findings ''based on the specific facts of this case.''[13] Similarly, in *Cedar Creek Wind Energy, LLC,* 135 FERC ¶ 61,141 (2011) (*Cedar Creek*), the Commission upheld the registration of two wind farm owners, Milford Wind Corridor Phase I, LLC (Milford) and Cedar Creek Wind Energy, LLC (Cedar Creek), as transmission owners and transmission operators, again based on the specific tie-line facilities involved.[14]

5. In both *Harquahala* and *Cedar Creek,* the Commission found that there would be a reliability risk if certain Reliability Standards generally applicable to transmission owners and operators were not also applied to Harquahala, Cedar Creek and Milford, and cited to specific Reliability Standards and requirements that should apply to those generators. However, the Commission recognized that it may not be appropriate to require these entities to comply with all Reliability Standards otherwise applicable to transmission owners and operators, and in each case ordered NERC to negotiate with the generating company to develop a list of transmission owner and transmission operator Reliability Standard requirements applicable to that individual entity.[15] On December 21, 2011, NERC submitted its compliance filing to the *Cedar Creek* order identifying which standards should apply to the generators subject to that order. In accepting NERC's filing, the Commission noted that the *Cedar Creek* order did not preclude NERC from pursuing a generic approach through the standards development process to determine which Reliability Standards should apply to generators.[16]

6. After the *Harquahala* decision, NERC announced the formation of an Ad Hoc Group for Generator Requirements at the Transmission Interface (Ad Hoc Group) to address concerns about perceived reliability gaps associated with generator interconnection facilities.[17] The Ad Hoc Group issued a report (Ad Hoc Group Report) suggesting a fairly broad approach to address these perceived gaps, including proposed changes to standard applicability and requirement language, as well as the introduction of two new NERC Glossary terms.[18] NERC initiated Project 2010–07 on January 15, 2010, following the issuance of a Standard Authorization Request as developed by the Ad Hoc Group.[19]

C. NERC Petition

7. On July 30, 2012, NERC filed a petition (NERC Petition or Petition) seeking Commission approval of proposed Reliability Standards FAC–001–1, FAC–003–3, PRC–004–2.1a, and PRC–005–1.1b. The FAC–001 and FAC–003 standards currently in effect are applicable only to transmission owners and operators, and NERC is proposing to extend their applicability to certain generator interconnection facilities. By contrast, the current version of PRC–004 and PRC–005 do apply to generator owners as well as transmission owners. Accordingly, NERC asserts that the proposed modifications in Reliability Standards PRC–004–2.1a and PRC–005–1.1b are designed merely to clarify that their requirements extend not only to protection systems associated with the generating facility or station itself, but also to any protection systems associated with the generator interconnection facilities.

8. For FAC–001–1, and for FAC–003–3 Requirement R3, NERC requests an effective date of one year following the first quarter after regulatory approvals. For the remaining requirements of FAC–003–3, NERC requests an effective date of two years following the first calendar quarter after regulatory approvals. NERC requests that PRC–004–2.1a and PRC–005–1.1b become effective upon receiving required regulatory approvals.

1. FAC–001–1

9. The currently effective Reliability Standard FAC–001–0 requires transmission owners to document, maintain, and publish facility connection requirements that comply with NERC, regional, and individual criteria for generation facilities, transmission facilities, and end-user facilities. In its Petition, NERC proposes to modify this standard so that it applies to any generator owner that has executed an ''Agreement to evaluate the reliability impact of interconnecting a third party Facility to the Generator Owner's existing Facility * * * used to interconnect to the interconnected Transmission systems (under FAC–002–1).''[20]

10. NERC notes that the proposed modification is designed to address the rare circumstance where a generator owner is required by a regulatory body to interconnect a third party generator to the generator owner's interconnection facility. NERC states that such an arrangement could result in the generator owner being registered as a new functional entity (such as a transmission owner or operator).[21] NERC further explains that the modification provides ''appropriate reliability coverage until any additional registration is required and ensures that the standard does not impact any Generator Owner that never executes an Agreement as described in the standard.''[22]

2. FAC–003–3

11. Both Reliability Standards FAC–003–1 (the currently effective vegetation management standard) and FAC–003–2 (the recently approved version of that standard)[23] set out requirements for

[10] Rules of Procedure of the North American Electric Reliability Corporation, Rule 501.1.3.4.

[11] *Harquahala,* 123 FERC ¶ 61,173 at P 44.

[12] *See id.* PP 45–55.

[13] *Id.* P 44.

[14] *Cedar Creek Wind Energy, LLC,* 135 FERC ¶ 61,241 (*Cedar Creek*), *order on reh'g and clarification,* 137 FERC ¶ 61,141 (2011) (November 17 Order), *order on compliance filing,* 139 FERC ¶ 61,214 (2012) (*Cedar Creek Compliance Order*).

[15] *See Harquahala,* 123 FERC ¶ 61,173 at PP 56–57; *Cedar Creek,* 135 FERC ¶ 61,241 at PP 88–89.

[16] *Cedar Creek Compliance Order,* 139 FERC ¶ 61,214 at P 19.

[17] *See* NERC Petition at 11.

[18] *Id.*

[19] *Id.* at 11, 28.

[20] *Id.* at Ex. B (Proposed FAC–001–1, Requirement R1).

[21] *Id.* at 20.

[22] *Id.* at 20–21. In addition, NERC notes that minor changes were made to the standard to reflect that ''Facilities'' and ''Transmission'' are defined terms, to reference ''Regional Entity'' instead of ''Regional Reliability Organization,'' and to reference ''ERO'' instead of ''NERC.'' Violation Risk Factors and Violation Severity Levels were created for each requirement.

[23] Subsequent to NERC's filing of the Petition, the Commission approved Reliability Standard FAC–

management of vegetation for transmission owners, but do not impose any obligations on generator owners. NERC's proposed modifications to Reliability Standard FAC–003–2 would extend its requirements to a subset of generator owners.

12. The proposed standard revises the ''Applicability'' section of FAC–003–2 to indicate that the standard applies to ''Generator Owners'' that own overhead lines that (1) extend more than one mile beyond the fenced area of the generating station switchyard, or (2) do not have a clear line of sight from the generating station switchyard to the point of interconnection with a transmission owner's facility (which NERC refers to as ''applicable lines'').[24] In addition, to qualify, the lines must meet the minimum standards for applicability associated with ''Transmission Facilities,'' *i.e.,* they must be operated at 200 kV or higher; or if operated below 200 kV, must be identified as an element of an Interconnection Reliability Operating Limit (IROL) under NERC Standard FAC–014 or as an element of a Major WECC Transfer Path. For generator owners with applicable lines, FAC–003–3 would impose the same requirements as are currently imposed on transmission owners under FAC–003–2, including an affirmative obligation to prevent encroachments into a minimum clearance distance, to prepare and update a formal transmission vegetation management program, to implement an annual work plan, and to report sustained outages for qualified lines.[25]

3. PRC–004–2.1a

13. Currently effective Reliability Standard PRC–004–2a requires transmission owners, applicable distribution providers, and generator owners to analyze their respective protection system misoperations, and to develop and implement a corrective action plan to address such misoperations. NERC states that, while there is no reliability gap in the existing version of this standard, the specific wording of the requirement could lead to confusion as to whether the activities required by this Reliability Standard apply to a generator owner's generator interconnection facilities.[26] Accordingly, NERC has proposed a modification that inserts the language ''and generator interconnection Facility'' into Requirement R2 (modification underlined):

> The Generator Owner shall analyze its generator *and generator interconnection Facility* Protection System Misoperations, and shall develop and implement a Corrective Action Plan to avoid future Misoperations of a similar nature according to the Regional Entity's procedures.

NERC asserts that the change to R2 ''makes clear that generator interconnection Facilities are also part of the Generator Owners' responsibility in the context of this standard.'' [27]

4. PRC–005–1.1b

14. Like the changes to Reliability Standard PRC–004, NERC states that the changes for proposed Reliability Standard PRC–005–1.1b are merely clarifying changes.[28] As currently written, Reliability Standard PRC–005–1b requires transmission owners, applicable distribution providers, and applicable generator owners to have a protection system maintenance and testing program in place for any protection system that affects the reliability of the bulk electric system. NERC maintains that, as with PRC–004–2.1a described above, there is no reliability gap associated with the standard as currently written but proposes to modify the standard to make clear that any generator interconnection facilities are also part of the generator owners' responsibility.[29] To make this clarification, NERC is proposing the following changes to Requirement R1 (modification underlined):

> Each Transmission Owner and any Distribution Provider that owns a transmission Protection System and each Generator Owner that owns a generation *or generator interconnection Facility* Protection System shall have a Protection System maintenance and testing program for Protection Systems that affect the reliability of the BES * * *.

NERC has proposed similar changes as needed throughout the revised standard, including changes to Requirement R2 (related to documentation of Protection System testing and maintenance programs) and Measure M1.

5. Sufficiency

15. NERC maintains that the changes proposed for these four Reliability Standards will address the reliability gap for generator interconnection facilities ''for the vast majority of Generator Owners and Generator Operators.'' [30] NERC explains that the proposed modifications to these standards will result in the application of certain Reliability Standards to generator owners without the need to register them as transmission owners or transmission operators only as a result of the generator interconnection facilities.[31] NERC further states that these are the only standards that need to be applied to generator owners and generator operators to ensure appropriate coverage of generator interconnection facilities ''[e]xcept as necessary on a fact-specific basis.'' [32]

16. NERC notes that the standard drafting team reviewed and assessed the Reliability Standards as identified in the Ad Hoc Group's Report, as well as the Reliability Standards identified in *Cedar Creek.* According to NERC, the Project 2010–07 standard drafting team reviewed 34 Reliability Standards and 102 requirements to determine what requirements should be extended to generator owners and generator operators that own or operate generator interconnection facilities, many of which had also been addressed in the Ad Hoc Group's Report.[33] However, the Project 2010–07 standard drafting team ultimately chose a different approach than that proposed in the Ad Hoc Group Report. The standard drafting team elected not to include clarifying language about a Reliability Standard's applicability to generator interconnection facilities in most standards otherwise applicable to generator owners or generator operators, and to instead focus on modifying certain Reliability Standards not currently applicable to generating entities.[34]

17. NERC provides a ''technical justification'' as to why it is not proposing modifications to the remaining Reliability Standards identified in the Ad Hoc Group Report or by the Commission in *Cedar Creek,* to apply them to generator owners and generator operators with generator interconnection facilities.[35] NERC acknowledges, however, that some generator interconnection facilities may require a more expansive approach:

003–2 although the revised standard has not yet become effective. *See Revisions to Reliability Standard for Transmission Vegetation Management,* Order No. 777, 78 FR 18,817 (Mar 28, 2013), 142 FERC ¶ 61,208 (2013).

[24] ''Clear line of sight'' is the distance that can be seen by the average person without special instrumentation on a clear day. NERC Petition, Ex. B (Proposed Reliability Standard FAC–003–3 § 4.3.1, n.3).

[25] *See* NERC Petition at 21, 23.

[26] *Id.* at 24–25.

[27] *Id.* at 25.

[28] *Id.* at 26.

[29] *Id.* at 26–27.

[30] *Id.* at 5.

[31] *Id.* at 12.

[32] *Id.* at 5.

[33] *Id.* at 11.

[34] *See id.* at 11–12.

[35] *See id.* at 12–18, Ex. C (Technical Resource Justification Document).

The drafting team acknowledges that some Facilities used solely to connect generators to the transmission system are more complex and may therefore require individual assessment. The reliability gaps associated with such Facilities should not be addressed simply through application of all standards applicable to Transmission Owners and Transmission Operators, but instead through an assessment of the impact of such a Facility on neighboring transmission Facilities. Such assessment should then be used to determine exactly which Reliability Standards and requirements should apply to that Facility and whether additional entity registration is warranted. This assessment should, at a minimum, be based upon the output of transmission planning and operating studies used by the Reliability Coordinator, Transmission Operator and Transmission Planner in complying with applicable Reliability Standards (specifically, IRO, TOP and TPL).[36]

Finally, NERC notes that its Petition and the proposed modifications will not have the effect of de-registering any entity from the NERC Compliance Registry.[37]

II. Discussion

18. Pursuant to section 215(d)(2) of the FPA, the Commission proposes to approve Reliability Standards FAC–001–1, FAC–003–3, PRC–004–2.1a, and PRC–005–1.1b as proposed by NERC.

19. First, we find that revised Reliability Standards FAC–001–1 and FAC–003–3 will enhance reliability by extending current requirements to appropriate generator interconnection facilities. Currently, generator owners are not required under Reliability Standard FAC–001–1 to develop and make available facility connection requirements to ensure compliance with NERC Reliability Standards, even if a third party is requesting such an interconnection. Because this situation may not commonly arise, we agree that extending the requirements of Reliability Standard FAC–001 to generator owners only upon execution of an agreement stemming from an interconnection request, as proposed in Reliability Standard FAC–001–1, is a reasonable way to address the reliability gap that may arise from the changes in conditions resulting from the third party interconnection.

20. Similarly, we agree that extending the vegetation management requirements of Reliability Standard FAC–003–2 to certain generator interconnection facilities addresses a potential reliability gap in a reasonable manner. While the vegetation surrounding generator interconnection facilities is typically regularly maintained to ensure the delivery of generation, there are currently no Reliability Standards that require generator owners to perform vegetation management or to maintain minimum levels of clearance between vegetation and significant overhead generator interconnection lines. We further find that the limitations on applicability to ''applicable lines'' as NERC proposes are reasonable. It is common for generator interconnection facilities of a relatively short span (i.e., less than one mile) to cross only areas with limited or no vegetation, i.e., gravel or concrete surfaces typically found in switchyards and immediate surrounding areas. However, with respect to lines that are ''exempt'' based on the existence of a clear sight line to the point of interconnection, we emphasize that this exemption must be interpreted narrowly, i.e. there should be no obstructions (such as vegetation, geological formations, buildings, fences, curvatures in the line, etc.) that prevent personnel from identifying potential reliability hazards for the full extent of the line.[38]

21. We further propose to approve the clarifying language NERC has proposed for Reliability Standards PRC–004–2.1a and PRC–005–1.1b. Given the potential that the existing standards could be interpreted to exclude generator interconnection facilities from the responsibilities otherwise assigned to the generator owner, we agree that it is appropriate to mitigate that possibility with the clarifying modifications.

22. However, further clarification of the term ''generator interconnection facility'' may be warranted. We understand the term to refer to generator interconnection tie-lines and their associated facilities extending from the secondary (high) side of a generator owner's step-up transformer(s) to the point of interconnection with the host transmission owner.[39] We further understand that a generator owner or generator operator's compliance obligations extend to the generator interconnection facilities up to the point of interconnection with the host transmission owner. We seek comment on this understanding.

23. We recognize that the standard drafting team reviewed 34 other Reliability Standards and 102 requirements to assess the need for applicability to generator owners and generator operators, and determined that some of those other Reliability Standards and requirements already apply to generators.[40] In its Petition, NERC makes clear that it is not seeking any changes to those other Reliability Standards and requirements, but identifies them in the Petition ''to provide a more complete picture of the assessments made by the drafting team in the course of Project 2010–07.''[41] The Commission appreciates NERC's work on this matter and its acknowledgement that the four Reliability Standards addressed in the Petition are not the only Reliability Standards that will apply to generators. However, the Commission concludes that the only Reliability Standards before the Commission for review in this proceeding are the four Reliability Standards described above. Therefore, this NOPR addresses the four Reliability Standards for which NERC seeks approval and makes no proposal about those other Reliability Standards and requirements that NERC identified in its Petition for informational purposes.

24. Further, in its Petition, NERC explains that some facilities are ''complex,'' and that it may require an ''individual assessment'' to determine whether a Reliability Standard applies to a facility used to connect a generator to the grid.[42] NERC goes on to state that such ''assessments should then be used to determine exactly what Reliability Standards and requirements should apply to that Facility and whether additional entity registration is

[36] *Id.* at 12–13.

[37] *Id.* at 5. The Commission reads this statement to mean that the Petition does not propose to overturn any order the Commission has issued addressing an entity's registration. *See, e.g., Cedar Creek* and *Harquahala.*

[38] *See generally, Version One Regional Reliability Standards for Facilities Design, Connections, and Maintenance; Protection and Control; and Voltage and Reactive,* Notice of Proposed Rulemaking, 135 FERC ¶ 61,061, at P 79 (2010) (requesting comment on whether a Regional Entity should be directed to replace a blanket exemption for two percent of operating hours with a more specific exemption, and noting a concern that the exemption was ''written more broadly than necessary'').

[39] In *Revisions to Electric Reliability Organization Definition of Bulk Electric System and Rules of Procedure,* Order No. 773, 141 FERC ¶ 61,236, at PP 164–65 (2012), we discussed the phrase ''generator tie-line'' in the context of deciding whether such lines should be excluded from the definition of bulk electric system as part of a broader exclusion for radial lines and radial systems. In that case, the Commission found that such lines should be included as part of the bulk electric system definition ''[i]f the generator is necessary for the operation of the interconnected transmission network.'' *Id.* P 164. We are not seeking any change to the approach taken or the definitions used in Order No. 773, but note that the inclusion of a generator tie-line in the bulk electric system definition does not necessarily mean its owner must be registered as a transmission owner or operator. In fact, NERC's proposal here assumes such registration will usually be unnecessary so long as the entity, if registered as a generator owner or operator, is subject to the four Reliability Standards addressed here.

[40] *See* NERC Petition at 11–18.

[41] *Id.* at 13.

[42] *Id.* at 12.

warranted.''[43] NERC adds that ''[t]his assessment should, at a minimum, be based upon the output of transmission planning and operating studies used by the Reliability Coordinator, Transmission Operator and Transmission Planner in complying with applicable Reliability Standards (specifically, IRO, TOP and TPL).''[44] The Commission appreciates that, while certain facilities may be adequately addressed through a generic evaluation, other facilities may, as NERC indicates, require ''individual assessment'' to properly determine which Reliability Standards apply to a facility. Thus, our proposal to approve the revised Reliability Standards is based on the understanding that additional Reliability Standards or individual requirements may need to be applied to generator interconnection facilities as NERC acknowledges in its Petition, based on ''individual assessments.'' However, the Petition is vague on the specific aspects of the individual assessments. For instance, will the determination of which Reliability Standards and requirements should apply to a facility occur during the Feasibility Study, the System Impact Study, the Facility Study, or some other time? Also, based on the individual assessments, how will the identification of the additional Reliability Standards and requirements be coordinated among the transmission owners, generator owners and others? Therefore, we seek comment as to what circumstances could trigger such an individual assessment. We also seek comment on how NERC envisions the individual assessments will be performed as part of the transmission planning and operating studies NERC mentions in the Petition, when the individual assessments will occur, what percentage of generator interconnection facilities are ''complex'' and thereby likely to trigger such an individual assessment (including the number of existing generator interconnection facilities that will be required to adhere to additional transmission owner or transmission operator Reliability Standards), and how the results of the individual assessments will be coordinated among the interested parties.

25. Finally, we propose to approve the Violation Risk Factors and Violation Severity Levels, as well as the implementation plan and effective dates for each modified Reliability Standard as proposed by NERC, including the proposed retirement dates for the existing standards.

III. Information Collection Statement

26. The following collection of information contained in the Proposed Rule is subject to review by the Office of Management and Budget (OMB) under section 3507(d) of the Paperwork Reduction Act of 1995 (PRA).[45] OMB's regulations require that OMB approve certain reporting and recordkeeping requirements (collections of information) imposed by an agency.[46] Upon approval of a collection of information, OMB will assign an OMB control number and expiration date. Respondents subject to the filing or recordkeeping requirements of this rule will not be penalized for failing to respond to these collections of information unless the collections of information display a valid OMB control number.

27. The Commission will submit these reporting and recordkeeping requirements to OMB for its review and approval under section 3507(d) of the PRA. Comments are solicited on the Commission's need for this information, whether the information will have practical utility, the accuracy of the provided burden estimate, ways to enhance the quality, utility, and clarity of the information to be collected, and any suggested methods for minimizing the respondent's burden, including the use of automated information techniques.

28. This Notice of Proposed Rulemaking proposes to approve Reliability Standards FAC–001–1, FAC–003–3, PRC–004–2.1a, and PRC–005–1.1b, which would replace currently effective Reliability Standards FAC–001–0, FAC–003–1,[47] PRC–004–2a, and PRC–005–1b. The modifications proposed for PRC–004–2.1a and PRC–005–1.1b are clarifications of existing requirements, do not extend those existing requirements to any new entity or to additional facilities, and do not affect the existing burden related to those standards.

29. The modifications proposed for FAC–001–1 would extend the obligation to document, maintain, and publish interconnection requirements to any generator owner that has an executed agreement with a third party to evaluate the reliability impact of a requested or required interconnection. NERC states, and we agree, that the number of affected generator owners is likely to be extremely small.[48] Moreover, it is likely that any increase in an entity's recordkeeping and reporting requirements would occur through a change in that entity's NERC registration status in any case, i.e., NERC would likely be considering registration of an entity as a transmission owner. Accordingly, the Commission views the potential increase in recordkeeping and reporting burden from revised standard FAC–001–1 as minimal, but has provided an estimate of that burden in the table set out below.

30. The modifications proposed in FAC–003–3 would extend NERC's vegetation management requirements to certain generator interconnection facilities, including requirements to create and maintain records related to the generator owner's vegetation management work plan and performance of inspections. Generator owners typically already maintain the vegetation surrounding the right of way for the generator interconnection facility that connects the generating station switchyard to the point of interconnection with a transmission owner's facility. However, the proposed requirements outlined in FAC–003–3 may exceed a generator owner's current vegetation management program, particularly with respect to recordkeeping and reporting.

31. *Public Reporting Burden:* The burden and cost estimates below are based on the increase in the reporting and recordkeeping burden imposed by the proposed Reliability Standards. Our estimate of the number of respondents affected is based on the NERC Compliance Registry as of March 19, 2013. According to the Compliance Registry, NERC has registered 892 generator owners within the United States, and we estimate that approximately 10 percent (or 89) of these generator owners have interconnection facilities that meet the proposed requirements for applicability of the new standard (i.e., having overhead lines that are greater than 200 kV or are part of an IROL or WECC Transfer Path, and that are either longer than one mile or without a clear sightline to the point of interconnection with the host transmission system).

32. The burden estimates reflect the changes in the standards and the number of affected entities (e.g., the generator owner's one-time burden to

[43] *Id.*

[44] *Id.* The assessment of the other Reliability Standards and requirements included in the Petition for informational purposes is the outcome of an assessment made by the standard drafting team for the purposes of filing the Petition.

[45] 44 U.S.C. 3507(d) (2006).

[46] 5 CFR 1320.11 (2012).

[47] As of the date of issuance of this NOPR, the currently effective standard is FAC–003–1. As noted above (*see* n.23), we recently approved FAC–003–2, which has yet to go into effect.

[48] *See* NERC Petition at 20.

develop, or review and modify, an existing vegetation management program, and the on-going, relatively minor burden of preparing quarterly reports of relevant outages). Estimates for the proposed additional burden imposed by the NOPR in RM12–16 follow.

FERC–725A	Number of respondents [49] (1)	Number of responses per respondent (2)	Average burden hours per response (3)	Total annual burden hours (1) X (2) X (3)	Total annual cost [50]
FAC–003–3 (Transmission Vegetation Management)					
Strategies, documentation, processes, & procedures (M3).	89	1	32	2,848 (one-time).	$148,096 one-time [@$52/hr.]
Quarterly Reporting (Compliance 1.4)	[51] 97	4	0.25	97	$6,790 [@$70/hr.]
Annual Veg. Inspect. Doc. (M6); annual veg. work plan (M7); evidence of mgt. of veg. (M1 & M2), confirmed veg. condition (M4) & corrective action (M5).	89	1	2	178	12,460 [@$70/hr.]
Record Retention (Compliance 1.2)	89	1	1	89	$2,492 [@$28/hr.]
FAC–001–1 (Facility Connection Requirements)					
Facility connection reqs. (R2, R3, M2, & M3)	5	1	16	80(one-time)	$5,600 (one-time) [@$70/hr.]
Record Retention [52]	5	1	1	5	$140 [@$28/hr.]
Total				3,297	$175,578

Title: Mandatory Reliability Standards for the Bulk-Power System.

Action: Proposed revisions to FERC–725A.

OMB Control No.: 1902–0244.

Respondents: Businesses or other for-profit institutions; not-for-profit institutions.

Frequency of Responses: One-time, annual, and quarterly.

Necessity of the Information: The proposed revisions to the four Reliability Standards noted above are part of the implementation of the Congressional mandate of the Energy Policy Act of 2005, to develop mandatory and enforceable Reliability Standards to better ensure the reliability of the nation's Bulk-Power System.

Internal Review: The Commission has reviewed the proposed revisions to the Reliability Standards and made a determination that its action is necessary to implement section 215 of the FPA. The Commission has assured itself, by means of its internal review, that there is specific, objective support for the burden estimate associated with the information requirements.

33. Interested persons may obtain information on the reporting requirements by contacting the following: Federal Energy Regulatory Commission, 888 First Street, NE., Washington, DC 20426 [Attention: Ellen Brown, Office of the Executive Director, email: *DataClearance@ferc.gov,* phone: (202) 502–8663, fax: (202) 273–0873].

34. For submitting comments concerning the collection of information and the associated burden estimates, please send your comments to the Commission, and to the Office of Management and Budget, Office of Information and Regulatory Affairs, Washington, DC 20503 [Attention: Desk Officer for the Federal Energy Regulatory Commission, phone: (202) 395–4638, fax: (202) 395–7285]. For security reasons, comments to OMB should be submitted by email to: *oira_submission@omb.eop.gov*. Comments submitted to OMB should include Docket Number RM12–04 and OMB Control Number 1902–0244.

IV. Regulatory Flexibility Act Certification

35. The Regulatory Flexibility Act of 1980 (RFA) [53] generally requires a description and analysis of proposed rules that will have significant economic impact on a substantial number of small entities. The RFA mandates consideration of regulatory alternatives that accomplish the stated objectives of a proposed rule and that minimize any significant economic impact on a substantial number of small entities. The Small Business Administration's (SBA's) Office of Size Standards develops the numerical definition of a small business.[54] The SBA has established a size standard for electric utilities, stating that a firm is small if, including its affiliates, it is primarily engaged in the transmission, generation and/or distribution of electric energy for sale and its total electric output for the preceding twelve months did not exceed four million megawatt hours.[55]

36. Proposed Reliability Standards FAC–001–1, FAC–003–3, PRC–004–2.1a, and PRC–005–1.1b will help to ensure that generator interconnection facilities are properly maintained and operated. The number of small business entities affected is expected to be small, because FAC–001–1 will apply only to the small subset of generator owners that have executed an agreement to interconnect with a third party, and FAC–003–3 will only affect generator owners with overhead transmission lines that (1) are operated at 200 kV or

[49] GO = Generator Owner; RE = Regional Entity. The respondents are generator owners, unless otherwise indicated.

[50] The estimates for cost per hour are derived as follows:

- $52/hour, the average of the salary plus benefits for an engineer and a forester, from Bureau of Labor and Statistics at *http://bls.gov/oes/current/naics3_221000.htm*
- $70/hour, the average of the salary plus benefits for a manager and an engineer, from Bureau of Labor and Statistics at *http://bls.gov/oes/current/naics3_221000.htm*
- $28/hour, based on a Commission staff study of record retention burden cost.

[51] Number of respondents includes 89 generator owners, who may be subject to the recordkeeping and reporting burdens of FAC–003 for the first time, and 8 Regional Entities, who may have a slight increase in recordkeeping and reporting requirements due to the increase in entities covered by the vegetation management standard.

[52] Regional Entities may have a de minimis increase in burden due to the increase in the number of entities potentially subject to the revised standard; that burden has been rolled into the estimated Average Burden Hours per Response.

[53] 5 U.S.C. 601–612 (2006).

[54] 13 CFR 121.101 (2012).

[55] 13 CFR 121.201, Sector 22, Utilities & n.1.

higher, or, are elements of an IROL or of a Major WECC Transfer Path, and (2) are longer than one mile or lacking in clear sightlines to the point of interconnection with the host transmission system.[56] Comparison of the NERC Compliance Registry with data submitted to the Energy Information Administration on Form EIA–861 indicates that, of the 892 generator owners in the United States registered by NERC, 48 qualify as small businesses. Of these, only about ten percent, or five entities, are expected to have qualifying interconnection facilities.

37. For the number of small generator owners that do have applicable facilities, the primary cost increase is expected to be in documentation, recordkeeping, and reporting burdens as discussed above. In addition, we estimate that for each of the estimated five small generator owners there will be an additional cost for the two hours to perform the annual inspection of the lines (at $47.00 per hour,[57] or an additional $94.00 per owner). Therefore, the estimated cost in the first year for the increased data collection and retention for these entities is approximately $3,144.00 per entity ($3,050.00 for the one-time and recurring reporting and record retention requirements from the table above plus $94.00 for the annual inspection of the line). In subsequent years, after completion of the one-time recordkeeping or reporting requirements, the cost will be reduced. Based on the above, the Commission does not consider the costs associated with NERC's proposed revisions to the four Reliability Standards to constitute a significant economic impact for small entities, because it should not represent a significant percentage of an affected small entity's operating budget. Accordingly, the Commission certifies that the revised requirements set forth in the four Reliability Standards will not have a significant economic impact on a substantial number of small entities, and no regulatory flexibility analysis is required.

V. Environmental Analysis

38. The Commission is required to prepare an Environmental Assessment or an Environmental Impact Statement for any action that may have a significant adverse effect on the human environment.[58] The Commission has categorically excluded certain actions from this requirement as not having a significant effect on the human environment. Included in the exclusion are rules that are clarifying, corrective, or procedural or that do not substantially change the effect of the regulations being amended.[59] The actions proposed here fall within this categorical exclusion in the Commission's regulations.

VI. Comment Procedures

39. The Commission invites interested persons to submit comments on the matters and issues proposed in this notice to be adopted, including any related matters or alternative proposals that commenters may wish to discuss. Comments are due June 24, 2013. Comments must refer to Docket No. RM12–16–000, and must include the commenter's name, the organization they represent, if applicable, and address.

40. The Commission encourages comments to be filed electronically via the eFiling link on the Commission's Web site at *http://www.ferc.gov*. The Commission accepts most standard word processing formats. Documents created electronically using word processing software should be filed in native applications or print-to-PDF format and not in a scanned format. Commenters filing electronically do not need to make a paper filing.

41. Commenters that are not able to file comments electronically must send an original of their comments to: Federal Energy Regulatory Commission, Secretary of the Commission, 888 First Street NE., Washington, DC 20426.

42. All comments will be placed in the Commission's public files and may be viewed, printed, or downloaded remotely as described in the Document Availability section below. Commenters on this proposal are not required to serve copies of their comments on other commenters.

VII. Document Availability

43. In addition to publishing the full text of this document in the **Federal Register,** the Commission provides all interested persons an opportunity to view and/or print the contents of this document via the Internet through the Commission's Home Page (*http://www.ferc.gov*) and in the Commission's Public Reference Room during normal business hours (8:30 a.m. to 5:00 p.m. Eastern time) at 888 First Street NE., Room 2A, Washington, DC 20426.

44. From the Commission's Home Page on the Internet, this information is available on eLibrary. The full text of this document is available on eLibrary in PDF and Microsoft Word format for viewing, printing, and/or downloading. To access this document in eLibrary, type the docket number excluding the last three digits of this document in the docket number field.

45. User assistance is available for eLibrary and the Commission's Web site during normal business hours from the Commission's Online Support at 202–502–6652 (toll free at 1–866–208–3676) or email at *ferconlinesupport@ferc.gov,* or the Public Reference Room at (202) 502–8371, TTY (202) 502–8659. Email the Public Reference Room at *public.referenceroom@ferc.gov*.

By direction of the Commission.

Nathaniel J. Davis, Sr.,

Deputy Secretary.

[FR Doc. 2013–09645 Filed 4–23–13; 8:45 am]

BILLING CODE 6717–01–P

DEPARTMENT OF ENERGY

Federal Energy Regulatory Commission

18 CFR Part 40

[Docket No. RM13–5–000]

Version 5 Critical Infrastructure Protection Reliability Standards

AGENCY: Federal Energy Regulatory Commission.

ACTION: Notice of proposed rulemaking.

SUMMARY: Pursuant to section 215 of the Federal Power Act, the Commission proposes to approve the Version 5 Critical Infrastructure Protection Reliability Standards, CIP–002–5 through CIP–011–1, submitted by the North American Electric Reliability Corporation, the Commission-certified Electric Reliability Organization. The proposed Reliability Standards, which pertain to the cyber security of the bulk electric system, represent an improvement over the current Commission-approved CIP Reliability Standards as they adopt new cyber security controls and extend the scope of the systems that are protected by the CIP Reliability Standards. The Commission is concerned, however, that limited aspects of the proposed CIP version 5 Standards are potentially ambiguous and, ultimately, raise questions regarding the enforceability of the standards. Therefore, the

[56] Some of the standards may also affect Regional Entities; however, they do not qualify as small entities.

[57] This wage figure is taken from the Bureau of Labor and Statistics at *http://bls.gov/oes/current/naics3.221000.htm*.

[58] *Regulations Implementing the National Environmental Policy Act of 1969,* Order No. 486, FERC Stats. & Regs., Regulations Preambles 1986–1990 ¶ 30,783 (1987).

[59] 18 CFR 380.4(a)(2)(ii).

Commission proposes to direct that NERC develop certain modifications to the CIP version 5 Standards to address the matters identified by the Commission.

DATES: Comments are due June 24, 2013.

ADDRESSES: Comments, identified by docket number, may be filed in the following ways:

• *Electronic Filing through http://www.ferc.gov.* Documents created electronically using word processing software should be filed in native applications or print-to-PDF format and not a scanned format.

• *Mail/Hand Delivery:* Those unable to file electronically may mail or hand-deliver comments to: Federal Energy Regulatory Commission, Secretary of the Commission, 888 First Street NE., Washington, DC 20426.

Instructions: For detailed instructions on submitting comments and additional information on the rulemaking process, see the Comment Procedures Section of this document.

FOR FURTHER INFORMATION CONTACT: Jason Christopher (Technical Information), Office of Electric Reliability, Division of Reliability Standards and Security, Federal Energy Regulatory Commission, 888 First Street NE., Washington, DC 20426 Telephone: (202) 502–8256; Austin Rappeport (Technical Information), Office of Electric Reliability, Division of Reliability Standards and Security, Federal Energy Regulatory Commission, 1800 Dual Highway, Suite 201, Hagerstown, MD 21740, Telephone: (301) 665–1393; Kevin Ryan (Legal Information), Office of the General Counsel, Federal Energy Regulatory Commission, 888 First Street, NE., Washington, DC 20426, Telephone: (202) 502–6840; Matthew Vlissides (Legal Information), Office of the General Counsel, Federal Energy Regulatory Commission, 888 First Street, NE., Washington, DC 20426, Telephone: (202) 502–8408.

SUPPLEMENTARY INFORMATION:

Notice of Proposed Rulemaking

(Issued April 18, 2013)

1. Pursuant to section 215 of the Federal Power Act (FPA),[1] the Commission proposes to approve the Version 5 Critical Infrastructure Protection (CIP) Reliability Standards, CIP–002–5 through CIP–011–1, submitted by the North American Electric Reliability Corporation (NERC), the Commission-certified Electric Reliability Organization (ERO). The proposed CIP version 5 Standards, which pertain to the cyber security of the bulk electric system, represent an improvement over the current Commission-approved CIP Reliability Standards as they adopt new cyber security controls and extend the scope of the systems that are protected by the CIP Reliability Standards.

2. Specifically, the proposed CIP version 5 Standards include twelve requirements with new cyber security controls. The new controls address Electronic Security Perimeters (CIP–005–5), Systems Security Management (CIP–007–5), Incident Reporting and Response Planning (CIP–008–5), Recovery Plans for BES Cyber Systems (CIP–009–5), and Configuration Change Management and Vulnerability Assessments (CIP–010–1). As discussed below, the proposed new controls will improve the security posture of responsible entities and represent an improvement in the CIP Reliability Standards.

3. In addition, NERC has proposed to adopt a new approach to identifying and classifying BES Cyber Systems that will require at least a minimum classification of ''Low Impact'' for all BES Cyber Systems. Specifically, NERC has proposed to categorize BES Cyber Systems as having a Low, Medium, or High Impact on the reliable operation of the bulk electric system. Once a BES Cyber System has been categorized, the responsible entity must comply with the associated requirements of the CIP version 5 Standards that pertain to that category. As discussed further below, the proposed approach to categorizing BES Cyber Systems is a step towards applying the CIP protections more comprehensively to better assure the protection of the bulk electric system.

4. While we believe that the proposed CIP version 5 Standards improve the currently-approved CIP Reliability Standards, certain aspects of the proposal raise concerns regarding the potential ambiguity and, ultimately, enforceability of the CIP version 5 Standards. Specifically, seventeen of the requirements of the suite of CIP version 5 Standards include language that requires the responsible entity to implement the requirement in a manner to ''identify, assess, and correct'' deficiencies.[2] As explained below, we are concerned that this language is unclear with respect to the compliance obligations it places on regulated entities and that it is too vague to audit and enforce compliance. For example, it is unclear whether the inclusion of the ''identify, assess and correct'' language in the requirements imposes one obligation on the responsible entity (i.e., to ensure the entity has a process in place to identify, assess and correct a violation) or two obligations (i.e., to (1) ensure the entity has a process in place to identify, assess and correct a violation and (2) to ensure that the underlying substantive requirement is not violated). Therefore, we seek comment on the meaning of this language and on how it will be implemented and enforced. Depending on the comments and explanations received, we may determine that it is appropriate to direct NERC to develop modifications. For example, the modification may seek to direct NERC to clarify both the compliance obligations created by this language and the criteria by which auditors will be able to determine compliance. Alternatively, we may direct NERC to remove this language if it results in requirements that degrade the protections afforded by the CIP version 5 Standards and are difficult to implement and enforce. The nature of any next steps will depend on additional information filed with the Commission.

5. In addition, we have concerns with one specific provision, Requirement R2 of Reliability Standard CIP–003–5, which sets forth the single compliance obligation for BES Cyber Systems categorized as Low Impact. Requirement R2 requires responsible entities to ''implement * * * documented cyber security policies that collectively address * * *'' cyber security awareness, physical security controls, electronic access controls and incident response to a cyber security incident. We support extending the scope of the systems that are protected by the CIP Reliability Standards, and believe this is a positive step forward in comprehensive protection of assets that could potentially cause cyber security risks to the bulk electric system. However, we are concerned that CIP–003–5, Requirement R2 simply requires responsible entities to implement documented policies and does not provide those entities with a clear roadmap of what they need to do in order to protect Low Impact BES Cyber Systems.

6. Beyond the identification of four broad topics, neither this Reliability Standard nor the NERC petition indicate the required content of such policies or the qualitative expectation for an adequate policy. Thus, we are concerned that Requirement R2 is not clear and unambiguous regarding what is required of the responsible entities or, more important, does not provide adequate cyber security controls for Low

[1] 16 U.S.C. 824o (2006).

[2] *See* NERC Petition at 33.

Impact BES Cyber Assets. Accordingly, as discussed in detail below, we propose to direct that NERC develop modifications to CIP–003–5, Requirement R2, to require that responsible entities adopt specific, technically-supported cyber security controls for Low Impact assets.

7. We also propose to approve the nineteen new or revised definitions associated with the proposed Reliability Standards for inclusion in the Glossary of Terms Used in NERC Reliability Standards (NERC Glossary). In addition, we seek comment on certain aspects of the proposed definitions. Depending on the comments and explanations received, we may determine that it is appropriate to direct that NERC develop modifications to certain proposed definitions to eliminate ambiguities and assure that BES Cyber Assets are adequately protected.

8. We further propose to approve 30 of the 32 Violation Risk Factors (VRF). However, we propose to direct NERC to modify the VRF assignment for CIP–006–5, Requirement R3 from Lower to Medium, and to modify the VRF assigned to CIP–004–5, Requirement R4 from Lower to Medium. In addition, we propose to direct NERC to modify the Violation Severity Levels (VSL) for the CIP version 5 Standards. We seek comment on these proposals.

9. We propose to approve NERC's proposal to allow responsible entities to transition from compliance with the currently-effective CIP version 3 Standards to compliance with the CIP version 5 Standards, essentially retiring the CIP version 4 Standards prior to mandatory compliance. Thus, upon approval of the CIP version 5 Standards in a Final Rule in this docket, CIP–002–4 through CIP–009–4 would not become effective, and CIP–002–3 through CIP–009–3 would remain in effect and would not be retired until the effective date of the CIP version 5 Standards. However, we also raise questions whether the 24-month and 36-month implementation periods proposed by NERC for the CIP version 5 Standards are necessary, and what activities are required to effect the transition during the proposed implementation periods.

10. The Commission recognizes the ongoing challenge of developing and maintaining meaningful cyber security requirements that set a baseline for protection of the nation's bulk electric system from cyber vulnerabilities. Users, owners and operators of the bulk electric system must adapt to changing threats and cyber technologies to assure the ongoing security of the nation's critical infrastructure. We believe that the modified CIP version 5 Standards proposed by NERC represent an improvement over the previously approved standards and should assist in a more robust cyber security posture for the industry. Therefore, we propose to approve the CIP version 5 Standards. However, Reliability Standards with unclear requirements or lacking minimum controls can create uncertainty and erode an otherwise effective cyber security posture. Thus, pursuant to section 215(d)(5), we also propose to direct NERC to modify the proposal to remove ambiguous language and assure that Low Impact assets have a clear compliance expectation that includes specified cyber security controls, in lieu of the proposed requirement for unspecified policies, as explained in detail below.

I. Background

A. Section 215 of the FPA

11. Section 215 of the FPA requires the Commission-certified ERO to develop mandatory and enforceable Reliability Standards, subject to Commission review and approval. Once approved, the Reliability Standards may be enforced in the United States by the ERO subject to Commission oversight, or by the Commission independently.[3] Pursuant to the requirements of FPA section 215, the Commission established a process to select and certify an ERO[4] and, subsequently, certified NERC as the ERO.[5]

B. Order Nos. 706 and 761

Order No. 706

12. On January 18, 2008, the Commission issued Order No. 706, which approved the CIP version 1 Standards to address cyber security of the Bulk-Power System.[6] In Order No. 706, the Commission approved eight CIP Reliability Standards (CIP–002–1 through CIP–009–1). While approving the CIP version 1 Standards, the Commission also directed NERC to develop modifications to the CIP version 1 Standards, intended to enhance the protection provided by the CIP Reliability Standards. Subsequently, NERC filed the CIP version 2 and CIP version 3 Standards in partial compliance with Order No. 706. The Commission approved these standards in September 2009[7] and March 2010,[8] respectively.

Order No. 761

13. On April 19, 2012, the Commission issued Order No. 761, which approved the CIP version 4 Standards (CIP–002–4 through CIP–009–4).[9] Reliability Standard CIP–002–4 (Critical Cyber Asset Identification) sets forth 17 uniform ''bright line'' criteria for identifying Critical Assets. The Commission also accepted NERC's proposed implementation schedule for the CIP version 4 Standards, which are to be fully implemented and enforceable beginning April 2014.[10]

II. NERC Petition and Proposed CIP Version 5 Standards

A. NERC Petition

14. In its January 31, 2013 petition, NERC seeks Commission approval of the CIP version 5 Standards, nineteen new or revised Glossary terms, Violation Risk Factors and Violation Severity Levels, and an implementation plan.[11] NERC maintains that the proposed CIP version 5 Standards are just and reasonable, as the proposal meets or exceeds each of the guidelines that the Commission identified in Order No. 672 for evaluating a proposed Reliability Standard.[12] NERC asserts that the proposed CIP version 5 Standards ''serve the important reliability goal of providing a cybersecurity framework for the identification and protection of BES

[3] *See* 16 U.S.C. 824o(e)(3).

[4] *Rules Concerning Certification of the Electric Reliability Organization; and Procedures for the Establishment, Approval and Enforcement of Electric Reliability Standards,* Order No. 672, FERC Stats. & Regs. ¶ 31,204, *order on reh'g,* Order No. 672–A, FERC Stats. & Regs. ¶ 31,212 (2006).

[5] *N. Am. Elec. Reliability Corp.,* 116 FERC ¶ 61,062, *order on reh'g and compliance,* 117 FERC ¶ 61,126 (2006), *aff'd sub nom. Alcoa Inc.* v. *FERC,* 564 F.3d 1342 (DC Cir. 2009).

[6] *Mandatory Reliability Standards for Critical Infrastructure Protection,* Order No. 706, 122 FERC ¶ 61,040, *order on reh'g,* Order No. 706–A, 123 FERC ¶ 61,174 (2008), *order on clarification,* Order No. 706–B, 126 FERC ¶ 61,229 (2009), *order on clarification,* Order No. 706–C, 127 FERC ¶ 61,273 (2009).

[7] *N. Am. Elec. Reliability Corp.,* 128 FERC ¶ 61,291, *order denying reh'g and granting clarification,* 129 FERC ¶ 61,236 (2009).

[8] *N. Am. Elec. Reliability Corp.,* 130 FERC ¶ 61,271 (2010).

[9] *Version 4 Critical Infrastructure Protection Reliability Standards,* Order No. 761, 77 FR 24594 (Apr. 25, 2012), 139 FERC ¶ 61,058 (2012) *order denying reh'g,* 140 FERC ¶ 61,109 (2012).

[10] We note that on February 12, 2013, President Barack Obama issued an Executive Order requiring the National Institute of Standards and Technology (NIST) to ''lead the development of a framework to reduce cyber risks to critical infrastructure.'' NIST is required to publish a preliminary version of the framework within 240 days of the Executive Order and a final version one-year after the Executive Order.

[11] Reliability Standards CIP–002–5 through CIP–011–1 are not attached to the notice of proposed rulemaking. The complete text of CIP version 5 Standards is available on the Commission's eLibrary document retrieval system in Docket No. RM13–5–000 and is posted on the ERO's Web site, *available at http://www.nerc.com.*

[12] *See* Petition at 8 (citing Order No. 672 FERC Stats. Regs. ¶ 31,204 at PP 320–337. See also NERC Petition, Exh. G (Order No. 672 Criteria for Approving Proposed Reliability Standards)).

Cyber Systems * * * to support the reliable operation of the Bulk Power System.'' [13] In addition, NERC states that the proposed CIP version 5 Standards are ''designed to be clear and unambiguous'' and the Commission should approve the CIP standards as ''clearly enforceable.'' [14]

15. Further, NERC maintains that the proposed CIP version 5 Standards represent a significant improvement to the currently-effective standards, as the CIP version 5 Standards require responsible entities to use a new approach to categorize all cyber systems impacting the bulk electric system as having a Low, Medium, or High Impact.[15] NERC states that the new approach to classifying cyber systems ''moves away from the CIP version 4 ''bright-line'' approach of only identifying Critical Assets (and applying CIP requirements only to their associated Critical Cyber Assets), to requiring a minimum classification of ''Low Impact'' for all BES Cyber Systems.'' [16] NERC states that the adoption of the Low-Medium-High Impact categorization ''resulted from a review of the National Institute of Standards and Technology (NIST) Risk Management Framework for categorizing and applying security controls, a review that was directed by the Commission in Order No. 706.'' [17]

16. NERC also notes the adoption of new language within several of the CIP version 5 Standards where the Standard Drafting Team incorporated ''a requirement that Responsible Entities implement cyber policies in a manner to ''identify, assess, and correct'' deficiencies.'' [18] NERC states that the proposed ''identify, assess, and correct'' language is ''[c]onsistent with the NIST Risk Management Framework and the Commission's guidance in prior orders,'' asserting that the ''implementation of certain CIP version 5 requirements in a manner to ''identify, assess, and correct'' deficiencies emulates the *FERC Policy Statement on Penalty Guidelines.''* [19] NERC further states that the ''identify, assess, and correct'' language ''is included as a performance expectation in the requirements, not as an enforcement component.'' [20]

17. NERC asserts that the CIP version 5 Standards address ''all applicable directives in Order No. 706'' while ''eliminating unnecessary documentation requirements to allow entities to focus on the reliability and security of the Bulk Power System.'' [21] Accordingly, NERC requests that the Commission approve the proposed CIP version 5 Standards, the proposed new and revised definitions, the associated Violation Risk Factors and Violation Severity Levels, and the proposed implementation plan. NERC requests as an effective date for the Reliability Standard, ''the first day of the eighth calendar quarter after a Final Rule is issued in this docket.'' [22]

18. NERC requests prompt Commission action approving the CIP version 5 Standards and associated implementation plan.[23] With regard to the implementation plan, NERC states that the proposed language ''would allow entities to transition from CIP Version 3 to CIP Version 5, thereby bypassing implementation of CIP Version 4 completely upon Commission approval.'' [24] NERC asserts that prompt approval of the CIP version 5 Standards and implementation plan ''would reduce uncertainty among Responsible Entities regarding implementation of the CIP standards.'' [25]

B. Proposed CIP Version 5 Standards and NERC Explanation of Provisions

19. NERC's proposal includes ten new or modified Reliability Standards.

20. *CIP–002–5–Cyber Security—BES Cyber System Categorization:* Proposed CIP–002–5 is the first step in identifying BES Cyber Systems, which are assets which must be protected by the cyber security standards. If a responsible entity does not identify any BES Cyber Systems, it does not have compliance responsibility under the rest of the proposed CIP Standards. However, a responsible entity that identifies BES Cyber Systems must comply with proposed CIP–003–5 to CIP–011–1, according to specific criteria that characterize the impact of the identified BES Cyber Systems.

21. In particular, proposed CIP–002–5 adds two new terms to the NERC Glossary that define the assets subject to CIP protections. First, NERC defines a BES Cyber Asset as ''[a] Cyber Asset that if rendered unavailable, degraded, or misused would, within 15 minutes of its required operation, misoperation, or non-operation, adversely impact one or more Facilities, systems, or equipment, which, if destroyed, degraded, or otherwise rendered unavailable when needed, would affect the reliable operation of the Bulk Electric System.'' [26] Second, NERC defines a BES Cyber System as ''[o]ne or more BES Cyber Assets logically grouped by a responsible entity to perform one or more reliability tasks for a functional entity.'' [27]

22. NERC states that proposed Reliability Standard CIP–002–5 will require the identification and categorization of BES Cyber Systems according to specific criteria that characterize their impact for the application of cyber security requirements commensurate with the adverse impact that loss, compromise, or misuse of those BES Cyber Systems could have on the reliable operation of the bulk electric system.[28]

23. NERC states that proposed CIP–002–5 ''Attachment 1—Impact Rating Criteria'' identifies three categories of BES Cyber Systems. The High Impact category covers large Control Centers, similar to those control centers identified as Critical Assets in CIP–002–4. The Medium Impact category covers generation and transmission facilities, similar to those identified as Critical Assets in CIP–002–4, along with other control centers not identified as Critical Assets in CIP–002–4. The Low Impact category covers all other BES Cyber Systems. NERC states that the Low Impact Category provides protections for systems not included in the CIP version 4 Standards.[29]

24. Once a responsible entity identifies a BES Cyber System under CIP–002–5, the entity must comply with the controls included in CIP–003–5 to CIP–011–1 corresponding to its impact category.[30]

25. *CIP–003–5—Cyber Security—Security Management Controls:* NERC states that proposed Reliability Standard CIP–003–5 will require approval by a CIP Senior Manager of the documented cyber security policies related to CIP–004–5 through CIP–009–5, CIP–010–1, and CIP–011–1. Proposed CIP–003–5, Requirement 2, will require implementation of policies related to cyber security awareness, physical security controls, electronic access controls, and incident response to a Cyber Security Incident for those assets that have Low Impact BES Cyber Systems under CIP–002–5's categorization process. According to NERC, a requirement that a Cyber

[13] *Id.* at 10.
[14] *Id.* at 27.
[15] *See Id.* at 15.
[16] *Id.*
[17] *Id.*
[18] *Id.* at 33.
[19] *Id.*
[20] *Id.*
[21] *Id.* at 5.
[22] *Id.* at 2.
[23] *Id.* at 5.
[24] *Id.* at 4.
[25] *Id.* at 5.
[26] *Id.* at 14.
[27] *Id.*
[28] *Id.* at 11.
[29] *Id.*
[30] *Id.*

Security Policy be ''readily available'' was deleted because of general confusion around that term and because training requirements in CIP–004–5 provide for knowledge of reliability policies. NERC states that it moved several provisions of requirements related to information protection in previous CIP versions to CIP–011–1 and, therefore, deleted the requirements from CIP–003–5.[31]

26. *CIP–004–5—Cyber Security—Personnel and Training:* NERC states that proposed Reliability Standard CIP–004–5 will require documented processes or programs for security awareness, cyber security training, personnel risk assessment, and access management. Requirement R2 of CIP–004–5 adds specific training roles for visitor control programs, electronic interconnectivity supporting the operation and control of BES Cyber Systems, and storage media as part of the treatment of BES Cyber System Information. NERC states that the drafting team modified the requirements pertaining to personnel risk assessments and access management in response to lessons learned from implementing previous versions. Proposed CIP–004–5, Requirement R3, now specifies that the seven year criminal history check covers all locations where the individual has resided for six consecutive months or more without specifying school, work, etc., and regardless of official residence. Proposed CIP–004–5, Requirement R4 now combines the access management requirements from CIP–003–4, CIP–004–4, CIP–006–4, and CIP–007–4 into a single requirement. These requirements from the CIP version 4 Standards, as incorporated in Requirement R4, remain largely unchanged except to clarify certain terminology. NERC states that combining these requirements improves consistency in the authorization and review process. Proposed Reliability Standard CIP–004–5 modifies Requirement R4 by removing the obligation to maintain a list of authorized personnel. NERC explains that the removal is appropriate because the list represents only one form of evidence to demonstrate compliance that only authorized persons have access. Requirement R5 requires a registered entity to revoke a terminated employee's access concurrent with his or her termination, to be completed within 24 hours.[32]

27. *CIP–005–5—Cyber Security—Electronic Security Perimeter(s):* NERC states that proposed Reliability Standard CIP–005–5, Requirement R1 focuses on the discrete Electronic Access Points rather than the logical ''perimeter,'' which is the focus of currently-effective CIP–005–3. Requirement R1.2 of currently-effective CIP–005 Standard has been deleted from the CIP version 5 Standards. NERC explains that Requirement R1.2 is definitional and was used to bring dial-up modems using non-routable protocols into the scope of previous versions of CIP–005. According to NERC, the non-routable blanket exemption included in CIP version 1 through version 4 was removed from CIP–002–5. Moreover, NERC deleted Requirements R1.1 and R1.3. However, according to NERC, the drafting team integrated the underlying concepts from Requirements R1.1 and R1.3 into the definitions of Electronic Security Perimeter (ESP) and Electronic Access Point (EAP).[33]

28. *CIP–006–5—Cyber Security—Physical Security of BES Cyber Systems:* NERC states that proposed CIP–006–5 is intended to manage physical access to BES Cyber Systems by specifying a physical security plan to protect BES Cyber Systems against compromise that could lead to misoperation or instability. Proposed CIP–006–5 reflects the retirement of Requirements R8.2 and R8.3 of Commission-approved CIP–006–4, concerning the retention of testing records. According to NERC, the retention period is now specified in the compliance section of proposed CIP–006–5.[34]

29. *CIP–007–5—Cyber Security—Systems Security Management:* NERC states that proposed CIP–007–5 addresses system security by specifying technical, operational, and procedural requirements in support of protecting BES Cyber Systems against compromise that could lead to misoperation or instability of the bulk electric system. NERC states that it modified CIP–007–5 to conform to the formatting approach of CIP version 5, along with changes to address several Commission directives and to make the requirements less dependent on specific technology so that they will remain relevant for future, yet-unknown developing technologies. For example, according to NERC, Requirement R3 is a competency-based requirement, *i.e.,* the responsible entity must document how it addresses the malware risk for each BES Cyber System, but the requirement does not prescribe a particular technical method in order to account for potential technological advancement.[35]

30. *CIP–008–5—Cyber Security—Incident Reporting and Response Planning:* NERC states that proposed CIP–008–5 mitigates the risk to the reliable operation of the bulk electric system resulting from a Cyber Security Incident by specifying incident response requirements. Proposed Requirement R1 requires responsible entities to report Cyber Security Incidents within 1 hour of recognition. Requirement R2 requires testing to verify response plan effectiveness and consistent application in responding to a Cyber Security Incident. Requirement R3 provides for an after-action review for tests or actual incidents, and requires an update to the Cyber Security Incident response plan based on those lessons learned. Requirement R3 also establishes a single timeline for a responsible entity to determine the lessons learned and update recovery plans. Specifically, where previous CIP versions specified ''30 calendar days'' for determining the lessons learned, followed by additional time for updating recovery plans and notification, proposed Requirement R3 combines those activities into a single 90-day timeframe.[36]

31. *CIP–009–5—Cyber Security—Recovery Plans for BES Cyber Systems:* NERC explains that proposed CIP–009–5 provides for the recovery of the reliability functions performed by BES Cyber Systems by specifying a recovery plan to support the continued stability, operability, and reliability of the bulk electric system. Requirement R1 includes controls to protect data that would be useful in the investigation of an event that results in the execution of a Cyber System recovery plan. NERC explains that Requirement R2 includes operational testing to support the recovery of BES Cyber Systems. Requirement R3 establishes a single timeline for a responsible entity to determine the lessons learned and update recovery plans, similar to CIP–008–5.[37]

32. *CIP–010–1—Cyber Security—Configuration Change Management and Vulnerability Assessments:* NERC states that proposed CIP–010–1 is a new standard consolidating the configuration change management and vulnerability assessment-related requirements from previous versions of CIP–003, CIP–005 and CIP–007. Requirement R1 specifies the configuration change management requirements. Requirement R2 establishes the configuration monitoring requirements intended to detect unauthorized modifications to BES Cyber Systems. NERC explains that

[31] *Id.* at 11–12.

[32] *Id.* at 12.

[33] *Id.*

[34] *Id.*

[35] *Id.* at 12–13.

[36] *Id.* at 13.

[37] *Id.*

Requirement R3 establishes the vulnerability assessment requirements intended to ensure proper implementation of cyber security controls while promoting continuous improvement of a responsible entity's cyber security posture.[38]

33. *CIP–011–1—Cyber Security—Information Protection:* NERC states that proposed CIP–011–1 is a new standard consolidating the information protection requirements from previous versions of CIP–003 and CIP–007. Requirement R1 specifies information protection controls to prevent unauthorized access to BES Cyber System Information. Requirement R2 specifies reuse and disposal provisions to prevent unauthorized dissemination of protected information.[39]

III. Discussion

34. Pursuant to section 215(d) of the FPA, we propose to approve the CIP version 5 Standards, CIP–002–5 through CIP–011–1 as just, reasonable, not unduly discriminatory or preferential, and in the public interest. The proposed CIP version 5 Standards, which pertain to the cyber security of the bulk electric system, represent an improvement over the current Commission-approved CIP Reliability Standards. For example, the CIP version 5 Standards adopt new cyber security controls that are intended to safeguard physical and electronic access to BES Cyber Systems. Further, NERC proposes a new approach to identifying and classifying BES Cyber Systems that will require at least a minimum classification of ''Low Impact'' for all BES Cyber Systems.

35. With regard to controls, the proposed CIP version 5 Standards include twelve requirements with new cyber security controls. These new cyber security controls should improve the defense-in-depth posture of users, owners and operators of the Bulk-Power System. For example, Requirement R1.3 of proposed Reliability Standard CIP–005–5 requires responsible entities to implement inbound and outbound network access permissions, and the reason for granting access. All other access is denied by default. Implementing outbound access permissions can prevent malware from reaching out to a command and control system, potentially reducing the effectiveness of the malware. As another example, pursuant to proposed CIP–005–5, Requirement R1.5, responsible entities must monitor for suspicious inbound and outbound communications at all access points to the Electronic Security Perimeter. Monitoring communications can detect and help prevent malicious code from transferring between networks. Other new controls pertain to increased minimum protections for remote access (CIP–005–5, Requirement R2), protection against the use of unnecessary physical input/output ports (CIP–007–5, Requirement R1.2), testing recovery plans at least once every 36 months through an operational exercise (CIP–009–5, Requirement R2.3), and developing a baseline configuration of BES Cyber Systems and monitoring for unauthorized changes to the baseline configuration (CIP–010–1, Requirement R1.1 and R2.1). We believe that the proposed new controls will improve the security posture of responsible entities and represent an improvement in the CIP Reliability Standards.

36. In addition, NERC has proposed to adopt a new approach to identifying and classifying BES Cyber Systems that will require at least a minimum classification of ''Low Impact'' for all BES Cyber Systems.[40] Specifically, NERC has proposed to adopt a process that will categorize BES Cyber Systems as having a Low, Medium, or High Impact on the reliable operation of the bulk electric system. Once a responsible entity has categorized its BES Cyber System(s), the responsible entity must then apply the associated requirements of the remaining CIP Reliability Standards, i.e., CIP–003–5 through CIP–011–1. The proposed new approach to categorizing BES Cyber Systems is a step towards applying the CIP protections more comprehensively to better assure the protection of the bulk electric system.

37. Accordingly, for the reasons discussed above, the Commission proposes to approve the CIP version 5 Standards.

38. We also propose to approve the nineteen new or revised definitions associated with the proposed Reliability Standards for inclusion in the NERC Glossary. In addition, we seek comment on certain aspects of the proposed definitions. Depending on the comments and explanations received, we may determine that it is appropriate to direct that NERC develop modifications to certain proposed definitions to eliminate ambiguities and assure that BES Cyber Assets are adequately protected.

39. We further propose to approve 30 of the 32 Violation Risk Factors (VRF). However, we propose to direct NERC to modify the VRF assignment for CIP–006–5, Requirement R3 from Lower to Medium, and to modify the VRF assigned to CIP–004–5, Requirement R4 from Lower to Medium. In addition, we propose to direct NERC to modify the Violation Severity Levels (VSL) for the CIP version 5 Standards. We seek comment on these proposals.

40. We propose to approve NERC's proposal to allow responsible entities to transition from compliance with the currently-effective CIP version 3 Standards to compliance with the CIP version 5 Standards, essentially retiring the CIP version 4 Standards prior to mandatory compliance. Thus, upon approval of the CIP version 5 Standards in a Final Rule in this docket, CIP–002–4 through CIP–009–4 would not become effective, and CIP–002–3 through CIP–009–3 would remain in effect and would not be retired until the effective date of the CIP version 5 Standards. However, we also raise questions whether the 24-month and 36-month implementation periods proposed by NERC for the CIP version 5 Standards are necessary, and what activities are required to effect the transition during the proposed implementation periods.

41. While we propose to approve the CIP version 5 Standards, we have also identified several concerns with certain provisions of the CIP version 5 Standards. In particular, as discussed in detail below, we are concerned that NERC's proposal to include language that requires entities to ''identify, assess, and correct'' deficiencies is unclear with respect to the implementation and compliance obligations it imposes and that it is too vague to audit and enforce compliance. Therefore, as explained below, we seek comment on this language.

42. Further, the advancement in security resulting from NERC's adoption of a tiered asset categorization, including requiring at least a minimum classification of ''Low Impact'' for all BES Cyber Systems, can be enhanced by: (1) Ensuring that the CIP Reliability Standards are clear, unambiguous, and enforceable; (2) ensuring that the scope of assets covered by the definition of ''BES Cyber System'' and associated terms captures the right assets for protection; and (3) ensuring that the minimum protections required for ''Low Impact'' assets are reasonable. Thus, we propose to direct that NERC develop a modification to CIP–003–5, Requirement R2, to require that responsible entities adopt specific, technically-supported cyber security controls for Low Impact assets. We discuss these proposed modifications below.

43. Accordingly, we discuss the following matters below: (A) The

[38] *Id.*

[39] *Id.* at 13–14.

[40] *See* Reliability Standard CIP–002–5.

''identify, assess, and correct'' language; (B) BES Cyber Asset categorization; (C) proposed definitions; (D) implementation plan; (E) Violation Risk Factor and Violation Severity Level assignments; and (F) other technical issues.

A. ''Identify, Assess, and Correct'' Language

NERC Petition

44. As noted above, 17 requirements of the CIP version 5 Standards incorporate ''a requirement that Responsible Entities implement cyber policies in a manner to 'identify, assess, and correct' deficiencies.'' [41] NERC states that the proposed ''identify, assess, and correct'' language is ''[c]onsistent with the NIST Risk Management Framework and the Commission's guidance in prior orders,'' asserting that the ''implementation of certain CIP version 5 requirements in a manner to ''identify, assess, and correct'' deficiencies emulates the *FERC Policy Statement on Penalty Guidelines.*'' [42] During the development of the CIP version 5 Standards, some commenters were concerned that ''there is no clear mechanism with how [the proposed ''identify, assess, and correct'' language] will be audited or that there may be inconsistent audits across Regions.'' [43] In response, the drafting team stated that the ''intent [of the language] is to change the basis of a violation in these requirements so that they are not focused on *whether* there is a deficiency, but on identifying, assessing and correcting deficiencies.'' [44]

45. In addition, the drafting team explained that the CIP version 5 Standards are written to require documented processes set forth in the tables that accompany the requirements. According to the drafting team, in moving toward a risk-based approach, ''[e]ntities are to have the processes; the processes must meet the requirements in the tables [of the CIP standards]; and the entities shall implement those processes in a manner that identifies assesses, and corrects deficiencies.'' [45]

Discussion

46. NERC has not sufficiently explained the proposed ''identify, assess, and correct'' language, which NERC has elsewhere referred to as ''self-correcting language.'' [46] As we explain below, we are concerned that this language is unclear with respect to the implementation and compliance obligations it places on regulated entities and that it is too vague to audit and enforce compliance. Therefore, we seek comment on the meaning of this language and on how it will be implemented and enforced. Depending on the comments and explanations received, we may determine that it is appropriate to direct NERC to develop modifications. For example, the modification may seek to direct NERC to clarify both the implementation and compliance obligations created by this language and the criteria by which auditors will be able to determine compliance. Alternatively, we may direct NERC to remove this language if it results in requirements that degrade the protections afforded by the CIP version 5 Standards and are difficult to implement and enforce.

47. Initially, we are concerned that the proposed ''identify, assess, and correct'' language is unclear with respect to the implementation and compliance obligations it places on regulated entities. For example, it is unclear whether the inclusion of the ''identify, assess and correct'' language in the requirements imposes one obligation on the responsible entity (i.e., to ensure the entity has a process in place to identify, assess and correct a violation) or two obligations (i.e., to (1) ensure the entity has a process in place to identify, assess and correct a violation and (2) to ensure that the underlying substantive requirement is not violated). In the former case, the language could be interpreted or understood to mean that a violation of a Requirement occurs only if the responsible entity did not identify, assess and correct the deficiencies. In the latter case, entities would have to demonstrate that they identify, assess, and correct the deficiencies and, in addition, not violate the underlying requirement.

48. The proposed ''identify, assess, and correct'' language is ambiguous enough to support both interpretations. Moreover, the comments of the drafting team can be read to support both interpretations. On one hand, the drafting team stated that the ''intent [of the language] is to change the basis of a violation in these requirements so that they are not focused on *whether* there is a deficiency, but on identifying, assessing and correcting deficiencies.'' [47] This suggests that the language is part of a single compliance obligation and does not impose an additional obligation not to violate the underlying requirement. On the other hand, the drafting team stated that ''[e]ntities are to have the processes; the processes must meet the requirements in the tables [of the CIP standards]; *and* the entities shall implement those processes *in a manner* that identifies assesses, and corrects deficiencies.'' [48] This suggests that the language creates a requirement to ''identify, assess and correct'' in addition to the obligation to meet the underlying substantive requirement imposed by the standard. Additionally, it is not clear to what extent the drafting team's statement that entities are required to implement processes ''*in a manner* that identifies assesses, and corrects deficiencies'' permits auditors and the Commission to evaluate the adequacy of an entity's processes or against what criteria they would be evaluated. We seek comment on the purpose of this language and the implications for reliability of both interpretations.

49. Additionally, we are concerned that under either interpretation the proposed the ''identify, assess, and correct'' language is too vague to be audited. NERC does not explain what is expected of responsible entities or the intended meaning of the individual terms ''identify,'' ''assess,'' ''correct,'' and ''deficiencies'' as they are used in CIP version 5.

50. As to the term ''identify,'' it is not clear whether a responsible entity is expected to take steps to recognize past deficiencies, ongoing deficiencies, or deficiencies that are likely to or may occur in the future. NERC does not explain the scope of activities that are implied in the term ''assess,'' which could range from a cursory review of an isolated ''deficiency'' to a detailed root-cause analysis. In addition, NERC has not explained what it means for a responsible entity to ''correct'' a deficiency. This term may include ending a deficiency, taking measures to address the effect of a deficiency, or taking steps to prevent a deficiency from recurring. NERC does not explain, nor does the text of the CIP version 5 Standards define, the term ''deficiencies.'' It is not clear whether ''deficiencies'' means ''possible violations,'' as defined in NERC's Compliance Monitoring and

[41] Petition at 33.

[42] *Id.*

[43] *Id.* at App. F, Part 2, p. 3435.

[44] *Id.*

[45] *Id.* at App. F, Part 2, p. 3436.

[46] *See North American Electric Reliability Corporation,* Informational Filing, Docket Nos. RM05–17–000, *et al.,* at 1, n. 3 (filed December 31, 2012) (NERC refers to the ''identify, assess, and correct'' term as ''self correcting language'' in the Reliability Standards Development Plan for 2013–2015).

[47] NERC Petition at App. F, Part 2, p. 3435.

[48] *Id.* at App. F, Part 2, p. 3436 [emphasis added].

Enforcement Program, or extend to a broader category of matters. In short, if a goal of this language is to encourage strong internal controls, the language itself provides no basis for distinguishing strong controls from weak controls and instead leaves this issue to be disputed in future enforcement proceedings. We seek comment on these concerns and on any modification that may be necessary to address them.

51. In addition, the petition does not identify a reasonable timeframe for identifying, assessing and correcting deficiencies. Without identifying a timeframe it is conceivable that, as long as the responsible entity identifies, assesses and corrects a deficiency before, or perhaps even when, NERC, the Regional Entities or the Commission discover the deficiency, there is no possible violation of the CIP Reliability Standards, regardless of the seriousness of the deficiency, the duration of the deficiency, or the length of time between the identification and correction of the deficiency. We seek comment on these concerns and on any modification that may be necessary to address them.

52. The proposed ''identify, assess, and correct'' language allows a responsible entity to avoid audit risk. Specifically, since there is no required timeframe for identifying, assessing and correcting a deficiency, a responsible entity could defer its required assessment of its CIP compliance program until just prior to a scheduled audit or self-certification. The petition does not explain whether the responsible entity is required to disclose the identified deficiencies in such cases. Nor is it clear whether the audit team can identify a potential violation if the responsible entity identifies the deficiency and is in the process of assessing and correcting it, even if the deficiency is identified long after it came into existence. It is also not clear how prior deficiencies that are identified, assessed and corrected are treated in assessing a responsible entity's compliance history. We seek comment on these concerns and on any modification that may be necessary to address them.

53. The petition does not explain how NERC will treat multiple corrections of deficiencies concerning the same requirement, or the quality of the mitigation. It is unclear whether previous corrections will be reported or otherwise made known to NERC because they are not considered potential violations of the standard. We seek comment on these concerns and on any modification that may be necessary to address them.

54. We are also concerned about how performance of the ''identify, assess and correct'' phrase can be expected to be uniform or consistent among responsible entities absent additional clarification, explanation or identification of techniques that Regional Entities and NERC would use to determine performance that would comply with requirements that include this phrase. NERC indicates that Audit Worksheets will address the ''identify, assess and correct'' provisions. However, the Audit Worksheets have not been developed or submitted for consideration in the petition. We seek comment on these concerns and on any modification that may be necessary to address them.

55. In the petition, NERC states that the ''identify, assess, and correct'' language is based upon the assess [49] and monitor [50] steps of the NIST Risk Management Framework.[51] NERC does not identify any specific source in these steps of the NIST Risk Management Framework for the ''identify, assess, and correct'' language. Moreover, both the assess and monitor steps of the NIST Risk Management Framework are tied to guidance publications that establish clear expectations for assessments and continuous monitoring.[52] As noted above, neither the CIP version 5 Standards nor the petition explain what is expected of responsible entities under the proposed ''identify, assess, and correct'' language. We are not opposed to adopting a process to assess and monitor a responsible entity's performance under the CIP Reliability Standards and, in fact, support the idea of having such a process along with clear, well-developed guidance materials. We are concerned, however, that including the assess and monitor processes in the language of a Requirement, as proposed by NERC, could render such provisions unenforceable. We seek comment on these concerns and on any modification that may be necessary to address them.

56. Depending on the comments and explanations received, we may determine that it is appropriate to direct NERC to develop modifications. For example, the modification may clarify the implementation and compliance obligations created by this language, and the standards by which auditors will be able to determine compliance. Alternatively, we may direct NERC to remove this language if it results in requirements that degrade the protections afforded by the CIP version 5 Standards and are difficult to implement and enforce.

57. We emphasize that our concerns about the proposed ''identify, assess, and correct'' language should not be read to prejudge the ongoing efforts at NERC to develop changes to the compliance and enforcement program, and this NOPR should not be read as a ruling on that effort. We support wholly NERC's effort to encourage responsible entities to develop internal controls and, moreover, agree that responsible entities should have strong internal controls and receive recognition for such controls when penalties actually are found warranted. Effective internal controls can reduce the need for external enforcement processes, and the resources committed by all participants to these processes. As the Commission stated in the *Revised Policy Statement on Penalty Guidelines,* ''the Penalty Guidelines served only to solidify the importance we place on compliance by providing substantial and transparent mitigation credit for effective compliance programs.'' [53] We also acknowledge and agree that the resources committed to compliance monitoring and enforcement should be reasonably calibrated to the reliability risks presented.

B. BES Cyber Asset Categorization and Protection

58. Proposed Reliability Standard CIP–002–5 requires responsible entities to categorize BES Cyber Systems as having a Low, Medium, or High Impact. NERC states that proposed CIP–002–5 requires ''the identification and categorization of BES Cyber Systems according to specific criteria that characterize their impact for the application of cyber security requirements commensurate with the adverse impact that loss, compromise,

[49] SP 800–37 describes the assess step as: ''Assess[ing] the security controls using appropriate procedures to determine the extent to which the controls are implemented correctly, operating as intended, and producing the desired outcome with respect to meeting the security requirements for the system.''

[50] SP 800–37 describes the monitor step as: ''Monitor[ing] and assess[ing] selected security controls in the information system on an ongoing basis including assessing security control effectiveness, documenting changes to the system or environment of operation, conducting security impact analyses of the associated changes, and reporting the security state of the system to appropriate organizational officials.''

[51] *See* Petition at 32.

[52] *See* SP 800–53A Revision 1, *Guide for Assessing the Security Revision 1 Controls in Federal Information Systems and Organizations* and SP 800–137, *Information Security Continuous Monitoring (ISCM) for Federal Information Systems and Organizations.*

[53] *Revised Policy Statement on Penalty Guidelines,* 132 FERC ¶ 61,216, at P 109 (2010).

or misuse of those BES Cyber Systems could have on the reliable operation of the [bulk electric system].'' [54] NERC states that the new approach to classifying cyber systems, which requires a minimum classification of ''Low Impact'' for all BES Cyber Systems, ''resulted from a review of the NIST Risk Management Framework for categorizing and applying security controls, a review that was directed by the Commission in Order No. 706.'' [55]

59. NERC's new approach to categorizing BES Cyber Systems is a step closer to comprehensively protecting assets that could cause cyber security risks to the bulk electric system. However, as discussed below, the Commission believes that NERC should consider improving the categorization process and should modify the minimum protections required for ''Low Impact'' assets to identify specific controls.

1. Reliability Based Criteria

60. In Order No. 706, the Commission directed NERC to ''monitor the development and implementation of the NIST standards to determine if they contain provisions that will protect the Bulk-Power System better than the CIP Reliability Standards.'' [56] The incorporation of new NIST-like concepts into the CIP Reliability Standards, such as the Low-Medium-High categorization, is encouraging. However, as discussed below, significant differences exist between the NIST Risk Management Framework and the proposed CIP version 5 Standards, particularly with regard to system identification and categorization.

61. As noted above, proposed Reliability Standard CIP–002–5 requires each responsible entity to categorize BES Cyber Systems as having a Low, Medium, or High Impact based on the adverse impact that loss, compromise, or misuse of its BES Cyber Systems could have on the reliable operation of the bulk electric system. NERC states that this categorization process is based upon the NIST Risk Management Framework. The NIST Risk Management Framework, however, utilizes a categorization process based on the loss of confidentiality, integrity, and availability of systems, as defined in the Federal Information and Security Act of 2002.[57]

62. The NIST Risk Management Framework requires a low, moderate, or high level of protection for devices, systems, and associated data based on the criticality of the protected information.[58] The categorization process establishes a foundation for security standardization across different types of data, controls, and equipment.[59] While the CIP version 5 Standards share a similar grouping of Low-Medium-High categories with the NIST Risk Management Framework, the categorization processes proposed under the CIP version 5 Standards and the NIST Risk Management Framework are different. Rather than categorize assets based on the loss of confidentiality, integrity, and availability of systems, CIP–002–5 categorizes assets based on ''reliability impact.''

63. Specifically, the reliability impacts underlying the CIP–002–5 asset categorizations are based on facility ratings, such as generation capacity and voltage levels. For example, the CIP–002–5—Attachment 1 Impact Rating Criteria establishes a threshold for ''Medium Impact'' generation at 1500 MW. This determination is based on the assumption that generation facilities with smaller values would have a ''Low Impact'' on grid reliability.[60] However, the petition does not contain or reference reliability studies that provide the supporting engineering analysis for such thresholds. For example, the ''Medium Impact'' thresholds for both generation and transmission do not seem to consider the impacts of a coordinated attack on ''Low Impact'' systems, such as the loss of several or all 100 kV facilities owned or operated by a single entity.

64. NERC's proposed categorization process is based on facility ratings, such as generation capacity and voltage levels. As discussed elsewhere, the NIST Risk Management Framework categorizes systems based on cyber security principles regarding the confidentiality, integrity, and availability of systems.[61] We accept NERC's proposal at this time. However, we may revisit the categorization of assets under the CIP Reliability Standards at a later date.

2. Protection of Low Impact BES Cyber Assets

65. Reliability Standard CIP–003–5, Requirement R2, which pertains to the obligations for BES Cyber Systems identified as Low Impact, provides:

> R2. Each Responsible Entity for its assets identified in CIP–002–5, Requirement R1, Part R1.3 [i.e., low impact systems], shall implement, in a manner that identifies, assesses, and corrects deficiencies, one or more documented cyber security policies that collectively address the following topics, and review and obtain CIP Senior Manager approval for those policies at least once every 15 calendar months: * * *
>
> 2.1 Cyber security awareness;
>
> 2.2 Physical security controls;
>
> 2.3 Electronic access controls for external routable protocol connections and Dial-up Connectivity; and
>
> 2.4 Incident response to a Cyber Security Incident.
>
> An inventory, list, or discrete identification of low impact BES Cyber Systems or their BES Cyber Assets is not required.

This is the only CIP version 5 Requirement applicable to Low Impact systems.

66. NERC states that the proposed CIP version 5 Standards require a minimum classification of ''Low Impact'' for all BES Cyber Systems that are not classified as either ''Medium'' or ''High'' Impact. The proposed new approach to identify Low Impact BES Cyber Systems is a positive step towards applying the CIP Reliability Standards in a more comprehensive manner to better assure the protection of the bulk electric system. However, we have concerns regarding Requirement R2 of Reliability Standard CIP–003–5, which sets forth the single compliance obligation for BES Cyber Systems categorized as Low

[54] Petition at 11.

[55] *Id.* at 15.

[56] Order No. 706, 122 FERC ¶ 61,040 at P 233.

[57] *See Federal Information and Security Act of 2002,* 44 U.S.C. 3542 (2002) (Confidentiality is defined as preserving authorized restrictions on access and disclosure, including a means for protecting personal privacy and proprietary information; integrity as guarding against improper information modification or destruction, and includes ensuring information nonrepudiation and authenticity; availability as ensuring timely and reliable access to and use of information).

[58] *See* NIST Special Publication 800–60, at 9. According to NIST, ''security categories are based on the potential impact on an organization should certain events occur. The potential impacts could jeopardize the information and information systems needed by the organization to accomplish its assigned mission, protect its assets, fulfill its legal responsibilities, maintain its day-to-day functions, and protect individuals. Security categories are to be used in conjunction with vulnerability and threat information in assessing the risk to an organization.''

[59] *See* NIST Special Publication 800–60 at 4–5. NIST states that the value of information security categorization is to enable organizations ''to proactively implement appropriate information security controls based on the assessed potential impact to information confidentiality, integrity, and availability and in turn to support their mission in a cost-effective manner.''

[60] *See* Reliability Standard CIP–002–5—BES Cyber System Categorization, at Attachment 1.

[61] For example, the ISA99 suite of standards (also known as ISA/IEC–62443: ''Security for Industrial Automation and Control Systems'') utilizes an approach similar to what is outlined in the NIST Framework and further clarifies system impact to mean ''impacts that might result from security failures, taking into account the consequences of a loss of confidentiality, system integrity, or availability of the assets, loss of reliability and manipulation of the [industrial control system].'' See ISA/IEC–62443–2–1, 2013 Draft. Requirement 4.4.2.1. Establishing and Managing the Industrial Automated Control System Security Management System. *http://isa99.isa.org/Documents/Drafts/ISA-d62443-2-1.pdf.*

Impact. Requirement R2 requires responsible entities to ''implement * * * documented cyber security policies that collectively address * * * '' cyber security awareness, physical security controls, electronic access controls and incident response to a cyber security incident. Further, CIP–003–5, Requirement R2, simply requires responsible entities to implement documented policies, which could allow insufficient protection to Low Impact BES Cyber Assets.

67. Under the proposed CIP version 5 Standards, a responsible entity is required to document and implement both policies and procedures to perform the specific requirements of CIP–003–5 through CIP–011–1 for systems identified as High or Medium Impact pursuant to the criteria in proposed CIP–002–5.[62] By contrast, a responsible entity is only required to have ''documented cyber security policies'' for Low Impact BES Cyber Systems; there is no requirement to implement actual cyber security protections.[63] While the Commission believes that an individual Medium or High Impact asset will have higher potential reliability impacts as compared to an individual Low Impact asset, the Reliability Standards must also enumerate specific, technically-supported cyber security controls for Low Impact assets.

68. We support NERC's efforts to increase the scope of systems that are protected by the CIP Reliability Standards, but the lack of specificity regarding the content of the four policies covering Low Impact BES Cyber Systems raises the prospect of an ambiguous Reliability Standard that will be difficult for responsible entities to implement.

69. Our concern is highlighted by NERC's supporting materials for proposed Reliability Standard CIP–003–5. For example, while Requirement R2.3 requires responsible entities to have policies on electronic access controls, the Guidelines and Technical Basis for CIP–003–5 pertaining to Requirement R2.3 states that ''electronic access control'' is not meant ''in the specific technical sense requiring authentication, authorization, and auditing.'' [64] However, it is unclear how an entity can perform electronic access control without some form of authentication or authorization. We also question whether the proposal to require a policy document can be considered implementing ''electronic perimeter protection,'' which NERC states is required at every impact level to implement a ''mutual distrust'' posture across all BES Cyber Systems.[65]

70. We are concerned that NERC's proposal to limit the protections for Low Impact BES Cyber Systems to documented policies, as opposed to requiring specific cyber security protections, results in ambiguity that may lead to inconsistent and inefficient implementation of the CIP Reliability Standards with regard to Low Impact BES Cyber Systems, and may not provide an adequate roadmap for responsible entities to follow to ensure the reliable operation of the bulk electric system. Therefore, pursuant to section 215(d)(5) of the FPA, we propose to direct NERC to develop a modification to CIP–003–5, Requirement R2, to require responsible entities to adopt specific, technically-supported cyber security controls for Low Impact assets, as opposed to the proposed unspecified policies. We seek comment on this proposal. In particular, we seek comment on the value of adopting specific controls for Low Impact assets that reflect their cyber security risk level, similar to the NIST Risk Management Framework.

71. Also, we seek comment on the lack of a requirement to have an inventory, list or discrete identification of Low Impact BES Cyber Systems. The definition of BES Cyber Systems is a threshold for determining applicability of the CIP Reliability Standards, so we assume responsible entities will in fact start by identifying all covered systems. If so, the rationale or benefit for not requiring an inventory, list or identification is unclear.

C. Proposed Definitions

72. The proposed CIP version 5 Standards include nineteen definitions for inclusion in the NERC Glossary. This includes the addition of fifteen new definitions and four revised definitions, as well as the retirement of two definitions.[66] We propose to approve the proposed definitions for inclusion in the NERC Glossary.

73. We also seek comment on certain aspects of the proposed definitions. After receiving comments, depending on the adequacy of the explanations provided in response to our questions, we may direct NERC to develop modifications to certain proposed definitions to eliminate ambiguities and assure that BES Cyber Assets are adequately protected.

Definition—BES Cyber Asset

74. In its Petition, NERC proposes the following definition of a BES Cyber Asset:

> A Cyber Asset that if rendered unavailable, degraded, or misused would, within 15 minutes of its required operation, misoperation, or non-operation, adversely impact one or more Facilities, systems, or equipment, which, if destroyed, degraded, or otherwise rendered unavailable when needed, would affect the reliable operation of the Bulk Electric System. Redundancy of affected Facilities, systems, and equipment shall not be considered when determining adverse impact. Each BES Cyber Asset is included in one or more BES Cyber Systems. (A Cyber Asset is not a BES Cyber Asset if, for 30 consecutive calendar days or less, it is directly connected to a network within an ESP, a Cyber Asset within an ESP, or to a BES Cyber Asset, and it is used for data transfer, vulnerability assessment, maintenance, or troubleshooting purposes.)

75. The first step in determining whether the substantive requirements of the CIP Reliability Standards apply is the identification of BES Cyber Assets pursuant to CIP–002–5. If an entity does not identify a BES Cyber Asset, the remaining CIP Reliability Standards do not apply. Thus, a clear understanding of the definition of BES Cyber Asset is important to assure accurate and consistent application of the CIP version 5 Standards.

76. The definition begins with ''[a] Cyber Asset that if rendered unavailable, degraded, or misused would, within 15 minutes of its required operation, misoperation, or non-operation, adversely impact one or more Facilities, systems, or equipment * * *.'' The CIP version 4 Standards include a 15 minute parameter for the identification of Critical Cyber Assets associated with generation units at a single plant location with an aggregate highest rated net Real Power capability of the preceding 12 months equal to or exceeding 1500 MW in a single

[62] *See* Reliability Standard CIP–003–5—Cyber Security—Security Management Controls, at Requirement R1.

[63] *See* Reliability Standard CIP–003–5—Cyber Security—Security Management Controls, at Requirement R2.

[64] *See* Reliability Standard CIP–003–5—Cyber Security—Security Management Controls, at Page 18.

[65] *See* Petition at 40.

[66] Newly proposed definitions include BES Cyber Asset, BES Cyber System, BES Cyber System Information, CIP Exceptional Circumstances, CIP Senior Manager, Control Center, Dial-up Connectivity, Electronic Access Control or Monitoring Systems (EACMS), Electronic Access Point (EAP), External Routable Connectivity, Interactive Remote Access, Intermediate System, Physical Access Control Systems (PACS), Protected Cyber Assets (PCA), and Reportable Cyber Security Incident. Revised definitions include Cyber Assets, Cyber Security Incident, Electronic Security Perimeter (ESP), and Physical Security Perimeter (PSP). Retired definitions include Critical Assets and Critical Cyber Assets.

Interconnection.[67] The drafting team adopted the 15 minute parameter in CIP version 4 in recognition of a concern that ''there may be Facilities which, while essential to the reliability and operability of the generation facility, may not have real-time operational impact within the specified real-time operations impact window of 15 minutes.'' [68] An example considered during the development of CIP version 4 was a coal-handling facility, the outage of which typically does not disrupt operations until after at least a short period of time. Thus, the 15 minute language found in the CIP version 4 Standards is tailored to address a specific concern with one class of assets. NERC now proposes to adopt similar 15 minute language in relation to all Cyber Assets associated with all classes of assets without explanation.

77. We seek comment on the purpose and effect of the 15 minute limitation. In particular, we seek comment on the types of Cyber Assets that would meet the ''within 15 minutes'' caveat. Further, we seek comment on the types of assets or devices that the 15 minute language would exclude and, in particular, whether the caveat ''within 15 minutes'' exempts devices that have an impact on the reliable operation of the bulk electric system. We also seek comment on whether the use of a specified time period as a basis for identifying assets for protection is consistent with the procedures adopted under other cyber security standards, such as the NIST Risk Management Framework, that apply to industrial control and Supervisory Control and Data Acquisition (SCADA) systems, as well as traditional information technology systems.

78. The proposed definition of BES Cyber Asset also provides that ''[a] Cyber Asset is not a BES Cyber Asset if, for 30 consecutive calendar days or less, it is directly connected to a network within an [Electronic Security Perimeter], a Cyber Asset within an [Electronic Security Perimeter], or to a BES Cyber Asset, and it is used for data transfer, vulnerability assessment, maintenance, or troubleshooting purposes.'' We seek comment on the purpose and anticipated effect of this provision in identifying BES Cyber Assets. Specifically, we seek comment on whether the clause could result in the introduction of malicious code or new attack vectors to an otherwise trusted and protected system, as demonstrated in recent real-world incidents.[69] In addition, we seek comment on the types of Cyber Assets used for ''data transfer, vulnerability assessment, maintenance, or troubleshooting purposes,'' as this language is used in the proposed BES Cyber Asset definition. If the terms cited here leave unreasonable gaps in the applicability of the CIP Reliability Standards, we will direct appropriate modifications.

Definition—Control Center

79. NERC proposes the following definition of a control center:

> One or more facilities hosting operating personnel that monitor and control the Bulk Electric System (BES) in real-time to perform the reliability tasks, including their associated data centers, of: 1) a Reliability Coordinator, 2) a Balancing Authority, 3) a Transmission Operator for transmission Facilities at two or more locations, or 4) a Generator Operator for generation Facilities at two or more locations.

80. We seek comment on the meaning of the phrase ''generation Facilities at two or more locations'' and, specifically, whether the phrase includes two or more units at one generation plant and/or two or more geographically dispersed units.

Definition—Cyber Asset

81. NERC's currently-effective Glossary definition of Cyber Asset provides:

> Programmable electronic devices and communication networks including hardware, software, and data.

NERC proposes the following definition of a Cyber Asset:

> Programmable electronic devices, including the hardware, software, and data in those devices.

Thus, NERC's proposed definition of Cyber Asset removes the phrase ''communication networks.'' We note that the FPA defines ''cybersecurity incident'' as follows:

> A malicious act or suspicious event that disrupts, or was an attempt to disrupt, the operation of those *programmable electronic devices and communication networks, including hardware, software and data* that are essential to the reliable operation of the bulk power system.[70]

Thus, it appears that NERC's revised definition of Cyber Asset removes a type of asset the statute defines as essential to the reliable operation of the Bulk-Power System.

82. We seek from NERC and other commenters an explanation for the purpose and intended effect of removing ''communication networks'' from the definition of a Cyber Asset. Further, we seek comment whether the removal of ''communication networks'' from the definition could create a gap in cyber security and the CIP Reliability Standards. In addition, we seek comment on the purpose and intended effect of the phrase ''data in those devices'' and, in particular, whether the phrase excludes data being transferred between devices.

Reliability Tasks

83. The term ''reliability tasks'' is an undefined term used in NERC's proposed definitions of BES Cyber System, Control Center, and Reportable Cyber Security Incident. For example, the proposed definition of BES Cyber System provides:

> One or more BES Cyber Assets logically grouped by a responsible entity to perform one or more reliability tasks for a functional entity.

84. We are concerned that the use of the undefined term ''reliability tasks'' will likely lead to confusion during implementation and result in interpretation requests. We seek comment on the meaning and scope of the phrase ''reliability tasks'' and whether there is a common understanding of this phrase to assure accurate and consistent implementation of the definitions and, hence, the CIP version 5 Standards.[71]

Intermediate Devices

85. NERC proposes to define Electronic Access Control or Monitoring Systems (EACMS) and Interactive Remote Access as follows:

> *EACMS*—Cyber Assets that perform electronic access control or electronic access monitoring of the Electronic Security Perimeter(s) or BES Cyber Systems. This includes Intermediate Devices.
>
> *Interactive Remote Access*—[* * *] Remote access originates from a Cyber Asset that is not an Intermediate Device and not located within any of the Responsible Entity's

[67] *See* Reliability Standard CIP–002–4a (Critical Cyber Asset Identification), at Requirement R2.

[68] NERC Petition, Docket No. RM11–11–000, at 16 (filed Feb. 10, 2011).

[69] *See* Department of Homeland Security Industrial Control Systems Cyber Emergency Response Team (ICS–CERT) Monthly Monitor (October-December 2012) at 1. Available at *http://ics-cert.us-cert.gov/pdf/ICS-CERT_Monthly_Monitor_Oct-Dec2012.pdf*. The October-December 2012 ICS–CERT Monthly Monitor describes two recent situations where malware was introduced into two electric generation industrial control systems (ICS) through removable media (i.e., USB drive) that was being used to back-up a control system environment and update software.

[70] 16 U.S.C. 824o(a)(8) (2006) (emphasis added).

[71] We note that the term ''reliability tasks'' is used in the NERC Functional Model to register entities based upon their responsibilities for the reliable operation of the Bulk-Power System.

Electronic Security Perimeter(s) or at a defined Electronic Access Point (EAP). [* * *]

Both proposed definitions include the undefined term ''intermediate devices.'' The proposed defined term ''Intermediate Systems'' was originally referred to as ''Intermediate Device'' in previous draft versions of the CIP version 5 Standards.[72] This inconsistency may lead to confusion in application of the CIP version 5 Standards.

86. Therefore, we seek comment on whether the proposed defined term ''Intermediate Systems'' is the appropriate reference in the proposed definitions of Electronic Access Control or Monitoring Systems (EACMS) and Interactive Remote Access, as opposed to the undefined term ''intermediate devices.''

D. Implementation Plan

87. NERC's proposed implementation plan for the CIP version 5 Standards addresses two distinct issues. First, NERC proposes language that would provide a transition from CIP version 3 to CIP version 5, thereby bypassing implementation of CIP version 4. Specifically, the proposed language provides:

> Notwithstanding any order to the contrary, CIP–002–4 through CIP–009–4 do not become effective, and CIP–002–3 through CIP–009–3 remain in effect and are not retired until the effective date of the Version 5 CIP Cyber Security Standards under this implementation plan.

NERC states that the proposed language is intended to alleviate uncertainty resulting from ''industry stakeholders not knowing whether the Commission will act on CIP Version 5 prior to the CIP Version 4 effective date, April 1, 2014 * * *.''[73]

88. Second, NERC proposes a 24-month implementation period for ''High Impact'' and ''Medium Impact'' BES Cyber Systems, and a 36-month implementation period for ''Low Impact'' BES Cyber Systems. The NERC petition does not provide an explanation or justification for the proposed implementation periods.

89. We propose to approve the implementation plan for the CIP version 5 Standards to allow responsible entities to transition from compliance with the currently-effective CIP version 3 Standards to compliance with the CIP version 5 Standards, essentially retiring the CIP version 4 Standards prior to mandatory compliance. Thus, upon approval of the CIP version 5 Standards in a Final Rule in this docket, CIP–002–4 through CIP–009–4 would not become effective, and CIP–002–3 through CIP–009–3 would remain in effect and would not be retired until the effective date of the CIP version 5 Standards. However, we do not see why the 24-month and 36-month implementation periods proposed by NERC for the CIP version 5 Standards are necessary.

90. We seek comment on the activities and any other considerations that justify 24-month and 36-month implementation periods for the CIP version 5 Standards. We seek an explanation of the activities that responsible entities will have to undertake to achieve timely compliance with the CIP version 5 Standards. We also seek comment on whether responsible entities can achieve compliance with the CIP version 5 Standards in a shorter period for those Cyber Assets that responsible entities have identified to comply with the currently-effective CIP Reliability Standards. Finally, we seek comment on the feasibility of a shorter implementation period and the reasonable time frame for a shorter implementation period. If the comments do not provide reasonable justification for the proposed implementation periods, we will direct appropriate modifications.

E. Violation Risk Factor/Violation Severity Level Assignments

91. NERC requests approval of the Violation Risk Factors (VRF) and Violation Severity Levels (VSL) assigned to the CIP version 5 Standards. In particular, NERC requests approval of 32 VRFs, one set for each requirement in the proposed CIP version 5 Standards. As explained below, we seek comment on our proposal to accept 30 VRFs and to direct NERC to develop modifications to two VRFs. Specifically, we seek comment on our proposal to direct NERC to modify the VRF assignment for CIP–006–5, Requirement R3 from Lower to Medium, and to modify the VRF assigned to CIP–004–5, Requirement R4 from Lower to Medium. In addition, we propose to direct NERC to modify the VSLs for the CIP version 5 Standards.

Lower VRF for Maintenance and Testing of Physical Access Control Systems

92. NERC assigns a Lower VRF to proposed CIP–006–5, Requirement R3, which addresses the maintenance and testing of Physical Access Control Systems (PACS). The NERC mapping document comparing the CIP version 4 and CIP version 5 Standards identifies CIP–006–4, Requirement R8, which addresses the maintenance and testing of all physical security mechanisms, as the comparable requirement in the CIP version 4 Standards.[74] Reliability Standard CIP–006–4, Requirement R8 is assigned a VRF of Medium.

93. Our Violation Risk Factor guidelines require, among other things, consistency within a Reliability Standard (guideline 2) and consistency between requirements that have similar reliability objectives (guideline 3).[75] The petition does not explain the change from a Medium VRF to a Lower VRF for a comparable requirement. We propose to modify the VRF assigned to CIP–006–5, Requirement R3 from Lower to Medium. However, NERC and other commenters are free to provide additional explanation than provided thus far to demonstrate CIP–006–5, Requirement R3 is properly assigned a Lower VRF.

94. On this basis, we seek comment on our proposal to direct NERC to modify the VRF assignment for CIP–006–5, Requirement R3 from Lower to Medium, consistent with the treatment of the comparable requirement in the CIP version 4 Standards, within 90 days of the effective date of a final rule in this proceeding.

Lower VRF for Access Authorizations

95. NERC assigns a Lower VRF to proposed CIP–004–5, Requirement R4, which relates to access management programs addressing electronic access, unescorted physical access, and access to BES Cyber System Information. Requirement R4 obligates a responsible entity to have a process for authorizing access to BES Cyber System Information, including periodic verification that users and accounts are authorized and necessary.

96. Recommendation 40 of the U.S.—Canada Power System Blackout Task Force, Final Report on the August 14, 2003 Blackout in the United States and Canada: Causes and Recommendations (Blackout Report) states that access to operationally sensitive computer

[72] The first balloted draft of the proposed CIP version 5 Standards included a definition for ''Intermediate Device.'' The name of this term did not change to ''Intermediate System'' until the fourth and final balloted draft.

[73] Petition at 43.

[74] Mapping Document Showing Translation of CIP–002–4 to CIP–009–4 into CIP–002–5 to CIP–009–5, CIP–010–1, and CIP–011–1. Page 20–21. Accessible from: *http://www.nerc.com/docs/standards/sar/Mapping_Document_012913.pdf.*

[75] *See N. Amer. Elec. Reliability Corp.,* 119 FERC ¶ 61,145, *order on reh'g and compliance filing,* 120 FERC ¶ 61,145, at PP 8–13 (2007) (VRF Order). The guidelines are: (1) Consistency with the conclusions of the Blackout Report; (2) Consistency within a Reliability Standard; (3) Consistency among Reliability Standards; (4) Consistency with NERC's Definition of the Violation Risk Factor Level; and (5) Treatment of Requirements that Co-mingle More Than One Obligation.

equipment should be ''strictly limited to employees or contractors who utilize said equipment as part of their job responsibilities.'' [76] In addition, Recommendation 44 of the Blackout Report states that entities should ''develop procedures to prevent or mitigate inappropriate disclosure of information.'' [77] These two Blackout Report recommendations relate to the protection of critical bulk electric system equipment and information, and we believe these recommendations support assigning access management programs, such as those required under CIP–004–5, Requirement R4, a Medium VRF. Our Violation Risk Factor guidelines require, among other things, consistency with the conclusions of the Blackout Report (guideline 1).

97. In addition, NERC proposes to assign a Medium VRF to CIP–004–5, Requirement R5, which addresses access revocation. This proposed assignment results in a potential inconsistency between VRFs within CIP–004–5. As noted above, Guideline 2 of our Violation Risk Factor guidelines requires consistency within a Reliability Standard. Access authorization, addressed in CIP–004–5, Requirement R4, is the companion to access revocation, addressed in CIP–004–5, Requirement R5. This relationship is demonstrated by the history of the CIP Reliability Standards; in the CIP version 1 through 4 Standards, access authorization and access revocation are two sub-requirements of a main requirement addressing the maintenance of a list of persons with authorized cyber or authorized unescorted physical access.[78] The petition does not explain the potential inconsistency between VRFs in CIP–004–5.

98. We propose to modify the VRF assigned to CIP–004–5, Requirement R4 from Lower to Medium. However, NERC and other commenters are free to provide additional explanation than provided thus far to demonstrate CIP–004–5, Requirement R4 is properly assigned a Lower VRF.

99. We seek comment on our proposal to direct NERC to change the VRF assignment for CIP–004–5, Requirement R4 from Lower to Medium, consistent with the Blackout Report and to ensure consistency between VRFs within CIP–004–5, within 90 days of the effective date of a final rule in this proceeding.

Violation Severity Levels

100. NERC requests approval for 32 sets of VSLs—one set for each requirement in the CIP version 5 Standards.[79] Due to inconsistencies with previous Commission orders and various typographical errors in the content of the VSLs, we propose to direct NERC to file a modified version as discussed below.

101. Certain VSLs for the CIP version 5 Standards are inconsistent with previous Commission guidance.[80] For example, proposed CIP–007–5, Requirement R4.4 requires entities to ''review a summation or sampling of logged events * * * at no greater than 15 days.'' The High VSL gradation for Requirement R4.4 states that an entity must miss ''two or more intervals'' for the violation to reach High severity over the specified time period. In addition, CIP–003–5, Requirement R4 provides the framework for a CIP Senior Manager to delegate authorities. The proposed VSL is based upon the number of incorrect delegations. The Commission has previously stated that VSL assignments are to be based on ''a single violation of a Reliability Standard, and not based on a cumulative number of occasions of the same requirements over a period of time.'' [81] These are two examples of proposed VSL assignments that are inconsistent with the Commission's VSL guidelines.[82]

102. Also, certain VSLs are unclear or contain typographical errors. For instance, the proposed VSLs for CIP–004–5, Requirement R4.2's Moderate and High gradations are identical.[83] Such typographical errors will create confusion and potentially hinder both compliance with and enforcement of the CIP Reliability Standards.[84]

103. NERC also proposes VSLs that include the terms ''identify,'' ''assess,'' ''correct,'' and ''deficiencies'' for the 16 CIP version 5 ''identify, assess and correct'' Requirements.[85] As noted above, we seek comment on these terms and may direct modifications based on the comments received. If we do so, the VSLs may no longer be consistent with VSL Guideline 3, that VSLs use the same terminology as the associated requirement.[86]

104. Therefore, for the reasons outlined above, we seek comment on our proposal to direct NERC to file a modified version of the VSLs within 90 days of the effective date of a final rule in this proceeding.

F. Other Technical Issues

105. While we propose to approve the CIP version 5 Standards based upon the improvements to the currently-approved CIP Reliability Standards discussed above, we believe that the cyber security protections proposed in the CIP version 5 Standards could be enhanced in certain areas. Therefore, we invite comment on the issues outlined below. After receiving comments, depending on the adequacy of the explanations provided in response to our questions, we may direct NERC to develop modifications to certain aspects of the CIP Reliability Standards to assure that BES Cyber Assets are adequately protected. Alternatively, we may conclude that while no changes are necessary at this time, NERC must consider these issues in preparing the next version of CIP Standards.

[76] *See* U.S.—Canada Power System Blackout Task Force, Final Report on the August 14, 2003 Blackout in the United States and Canada: Causes and Recommendations (April 2004) (Blackout Report) at 167. The Blackout Report is *available at https://reports.energy.gov/BlackoutFinal-Web.pdf.*

[77] *See Id.* p 169.

[78] *E.g.,* Reliability Standard CIP–004–4a, Requirement R4 states:

R4. Access—The Responsible Entity shall maintain list(s) of personnel with authorized cyber or authorized unescorted physical access to Critical Cyber Assets, including their specific electronic and physical access rights to Critical Cyber Assets.

R4.1. The Responsible Entity shall review the list(s) of its personnel who have such access to Critical Cyber Assets quarterly, and update the list(s) within seven calendar days of any change of personnel with such access to Critical Cyber Assets, or any change in the access rights of such personnel. The Responsible Entity shall ensure access list(s) for contractors and service vendors are properly maintained.

R4.2. The Responsible Entity shall revoke such access to Critical Cyber Assets within 24 hours for personnel terminated for cause and within seven calendar days for personnel who no longer require such access to Critical Cyber Assets.

[79] Petition at 2.

[80] *N. Amer. Elec. Reliability Corp.,* 123 FERC ¶ 61,284 (Violation Severity Level Order), *order on reh'g,* 125 FERC ¶ 61,212 (2008).

[81] Violation Severity Level Order, 123 FERC ¶ 61,284 at PP 35–36.

[82] Further examples of this concern include VSL assignments for the following: CIP–003–5, Requirement R3, CIP–004–5, Requirement R1, CIP–007–5, Requirement R4, CIP–009–5, Requirement R3.

[83] *See* NERC Petition, Exh. E (Table of VRFs and VSLs Proposed for Approval and Analysis of how VRFs and VSLs Were Determined Using Commission Guidelines), at 21.

[84] The Requirements that raise this concern include: CIP–003–5, Requirements R1, R2, R3; CIP–007–5, Requirement R5; CIP–008–5, Requirements R2, R3; CIP–009–5, Requirements R2, R3.

[85] Although NERC has proposed 17 requirements with the ''identify, assess, and correct'' language, the VSL assignment for CIP–003–5, Requirement R4 does not refer to the ''identify, assess, and correct'' language.

[86] *See Automatic Underfrequency Load Shedding and Load Shedding Plans Reliability Standards,* Order No. 763, 139 FERC ¶ 61,098, at PP 91, 95 (2012) (citing VSL Guideline 3, the Commission directed NERC to change a VSL for Reliability Standard PRC–006–1, Requirement R8 to remove the phrase ''more than 5 calendar days, but'' because the requirement did not contain a five-day grace period for providing data to planning coordinators that was included in the VSL).

1. Communications Security

106. Protecting communications systems is a critical concept in cyber security. Communications security involves securing the data being transmitted across a network.[87] Secure data transmission is a basic layer to any defense-in-depth security strategy for typical industrial control systems.[88] When addressing cyber security for electric power systems, communications security should protect and ensure the confidentiality, integrity, and availability of the data and functions used to support the reliable operation of the Bulk-Power System.

107. We believe that the adoption of cryptography would improve the approach adopted in the CIP version 5 Standards.[89] Cryptography is a branch of mathematics that provides communications protection.[90] Cryptography is a useful technique to protect data that is utilized for both smart grid applications [91] and in other industries,[92] including the natural gas [93] and nuclear power industries.[94] Cryptography ensures the confidentiality of sensitive information, ensures the integrity of data and commands, determines if data has been modified, and authenticates the identity of the sender. A variety of cryptographic tools, such as encryption, integrity checks, and multi-factor authentication, can enhance a responsible entity's defense-in-depth security strategies.

108. We are also concerned with NERC's proposal to exempt communication networks from protection based solely on specific types of technology. While proposed CIP–002–5 removes the prior blanket exemption for non-routable protocol, we seek comment regarding whether or not the resulting standards adequately protect non-routable communication systems.[95] We maintain our prior position that limiting the CIP protections to only routable systems adds additional risk to the bulk electric system.[96] Furthermore, by effectively locking the CIP Reliability Standards into a specific technology, we are concerned that any future technology which is non-routable in nature will not be addressed by the CIP Reliability Standards. Regardless of technology, the NIST Risk Management Framework addresses security for all communication systems.[97]

109. We invite comment on whether the adoption of communications security protections, such as cryptography and protections for non-routable protocol, would improve the CIP Reliability Standards.

2. Remote Access

110. Remote access refers to the ability to access a non-public computer network from external locations.[98] Remote access provides greater flexibility in accessing remote computer networks; however, this flexibility creates new security risks by allowing a potentially unsecured device access into an entity's network.

111. Improperly implementing remote access procedures can create security vulnerabilities.[99] An entity must be able to verify that a party, whether it be an employee, vendor, or automated system, initiating remote access to the entity's internal networks has the appropriate access permissions. Since the communication network used for remote access is a pathway that can be used to spread malware, the secure implementation of remote access is another step in protecting the confidentiality, integrity, and availability of the data and functions used to support the reliable operation of the bulk electric system.

112. Due to the increased risk associated with utilizing remote access and the complexities involved with secure implementation, many groups have created guidance documents to aid in the secure implementation of remote access. NIST, Department of Homeland Security (DHS), and NERC have developed guidance documents for securing remote access connections.[100] The CIP version 5 Standards reflect certain aspects of these guidance documents. Specifically, proposed CIP–005–5, Requirement R2 requires responsible entities to utilize an Intermediate System, use encryption that terminates at an Intermediate System, and implement multi-factor authentication for all Interactive Remote Access sessions associated with high and medium impact BES Cyber Systems that allow Interactive Remote Access.[101]

113. The controls in CIP–005–5, Requirement R2, however, are not as stringent as the guidance in the NERC advisory or controls required under the NIST Risk Management Framework.[102] For example, both the NIST Risk Management Framework and NERC's remote access guidance document recommend authorization for each individual, person or system, granted remote access.[103] We invite comment on whether the adoption of more stringent controls for remote access would improve the CIP Reliability Standards.

3. Differences Between the CIP Version 5 Standards and NIST

114. It appears that the CIP version 5 Standards do not address certain aspects of cyber security in as comprehensive a manner as the NIST Risk Management Framework addresses the same topics. For example, certain security controls contained in NIST Special Publication

[87] *See* NIST Interagency Report 7298, *Glossary of Key Information Security Terms,* which defines communication security (COMSEC) as a ''component of Information Assurance that deals with measures and controls taken to deny unauthorized persons information derived from telecommunications and to ensure the authenticity of such telecommunications. COMSEC includes crypto security, transmission security, emissions security, and physical security of COMSEC material.''

[88] *See* NIST Special Publication 800–82, *Guide to Industrial Control Systems Security,* at page 3. According to NIST, ''in a typical ICS * * * a defense-in-depth strategy * * * includes * * * applying security techniques such as encryption and/or cryptographic hashes to ICS data storage and communications where determined appropriate.''

[89] The CIP version 5 Standards address the use of cryptography in only one instance, regarding interactive remote access. *See* Reliability Standard CIP–005–5—Cyber Security—Electronic Security Perimeters, Requirement R2.2, at Page 16.

[90] *See* NIST Special Publication 800–21. According to NIST, cryptography can be used to provide confidentiality, data integrity, authentication, authorization and non-repudiation. Cryptography relies upon two basic components: an algorithm (or cryptographic methodology) and a key. The algorithm is a mathematical function, and the key is a parameter used in the transformation.

[91] *See* NISTIR 7628: Guidelines for Smart Grid Cyber Security and FIPS 140–2 for further guidance regarding smart grid systems and cryptography.

[92] *See* ISA/IEC–62443–2–1: Security for Industrial Automation and Control Systems—Industrial Automation and Control System Security Management System.

[93] *See* AGA 12: Cryptographic Protections for SCADA Communications.

[94] *See* NRC Regulatory Guide 5.71 for both data transmission integrity and confidentiality, as well as cryptographic key management.

[95] *See* NERC Petition at pages 11–12. In particular, CIP Version 5 introduces qualifying language for many requirements through the use of the ''External Routable Connectivity'' definition. Furthermore, other definitions exempt non-routable systems.

[96] *See* Order No. 761, 139 FERC ¶ 61,058 at PP 85–86.

[97] *See* SP 800–53 Revision 3, security control family System and Communications Protection, page F–106–123.

[98] *See* SP 800–46 Revision 1, *Guide to Enterprise Telework and Remote Access Security* page 2–1.

[99] *See* Remote Access VPN—Security Concerns and Policy Enforcement, SANS Reading Room, 2003, at page 3. *Available at http://www.sans.org/reading_room/whitepapers/vpns/remote-access-vpn-security-concerns-policy-enforcement_881.*

[100] *See* SP 800–53 Revision 3, security control AC–17 page F–14–15. *See also* SP 800–46 Revision 1, Guide to Enterprise Telework and Remote Access Security. *See also* DHS *Configuring and Managing Remote Access for Industrial Control Systems. See also* NERC's *Guidance for Secure Interactive Remote Access.*

[101] *See* Petition at 12.

[102] *See* SP 800–53 Revision 3, security control AC–17, page F–14–15.

[103] *See* SP 800–53 Revision 3, security control AC–17, page F–14–15. See also *Guidance for Interactive Remote Access,* NERC, July 2011, page 12.

800–53's Security Control Catalog and associated guidance documents are not reflected in the CIP version 5 Standards.

115. The proposed CIP version 5 Standards do not address the proper upkeep and the protection of maintenance devices in as comprehensive a manner as the NIST Risk Management Framework.[104] In addition, proposed CIP–004–5 does not require a comprehensive analysis of all individual's duties to determine where separation of duties can be utilized to improve security.[105] The proposed CIP version 5 Standards also do not address the monitoring of information systems for new threats and vulnerabilities, as well as changes to how the asset should be categorized pursuant to CIP–002–5, in as comprehensive a manner as the NIST Risk Management Framework.[106]

116. In particular, the CIP version 5 Standards do not provide for re-categorizing BES Cyber Systems based on a change in an individual entity's risk determinations. The CIP version 5 Standards also do not require minimum terms for contractual agreements associated with the acquisition or integration of new systems.[107] This is not an exhaustive list of the differences between the proposed CIP version 5 Standards and the NIST Risk Management Framework, but is representative of the differences in the security posture required under each.

117. While we are not proposing to direct NERC to address these concepts in the CIP Reliability Standards at this time, we invite comment on whether, and in what way, adoption of certain aspects of the NIST Risk Management Framework could improve the security controls proposed in the CIP version 5 Standards.

IV. Information Collection Statement

118. The FERC–725B information collection requirements contained in this Proposed Rule are subject to review by the Office of Management and Budget (OMB) under section 3507(d) of the Paperwork Reduction Act of 1995.[108] OMB's regulations require approval of certain information collection requirements imposed by agency rules.[109] Upon approval of a collection of information, OMB will assign an OMB control number and expiration date. Respondents subject to the filing requirements of this rule will not be penalized for failing to respond to these collections of information unless the collections of information display a valid OMB control number. The Commission solicits comments on the Commission's need for this information, whether the information will have practical utility, the accuracy of the burden estimates, ways to enhance the quality, utility, and clarity of the information to be collected or retained, and any suggested methods for minimizing respondents' burden, including the use of automated information techniques.

119. The Commission based its paperwork burden estimates on the difference between the latest Commission-approved version of the CIP Reliability Standards (CIP version 4) and the estimated paperwork burden resulting from CIP version 5. While the Commission is proposing to allow the CIP version 3 Standards to remain in effect until the CIP version 4 Standards become effective, the Commission has already imposed the burden of implementing the CIP version 4 Standards. Thus, from a regulatory perspective, any change in burden related to the proposed approval of the CIP version 5 Standards would be relative to the change from the burden related to that imposed by the implementation of the CIP version 4 Standards.

120. The information collection burden under CIP version 5 is different than that imposed by CIP version 4. Under CIP version 4, all applicable entities must first identify, by applying criteria specified in CIP–002–4, which of the Cyber Assets they own are subject to the mandatory protections specified in the remaining CIP standards. Those identified Cyber Assets are termed Critical Cyber Assets (CCA) in CIP version 4. If, upon completion of the required process in CIP–002–4, the entity has identified at least one CCA, it must implement all mandatory protections specified in the remaining CIP Reliability Standards with respect to any identified CCA. If, on the other hand, the entity determines that it does not own any CCAs, it is not required to implement any of the protections specified in the remaining CIP version 4 Standards. By contrast, CIP version 5 does not use the term CCA. Under CIP version 5, a responsible entity identifies Cyber Assets for protection by applying the CIP–002–5 definitions and classification criteria. The responsible entity is required to comply with at least some mandatory protections in the remaining standards for all Cyber Assets identified as BES Cyber Systems (depending on their classification of Low, Medium, or High and other specifics specified in various individual requirements).

121. Because the change in paperwork burden between CIP version 4 and CIP version 5 differs depending upon the extent to which that entity had to comply with CIP version 4, we delineate the registered entities into three groupings, as follows:

Group A: Entities that are not subject to the CIP version 4 Standards, but are subject to the CIP version 5 Standards. The Group A entities consist of those Distribution Providers that are not also registered for another CIP function, such as the Load Serving Entity function (which is subject to CIP version 4).

Group B: Entities that are registered for functions subject to CIP version 4, but that did not identify any CCAs under CIP–002–4. Therefore, Group B entities do not own facilities that require the implementation of mandatory protections specified by the remaining CIP version 4 Standards.

Group C: Entities that are registered for functions subject to CIP version 4 *and* that identify, upon completion of the CIP–002–4 analysis, at least one asset as a CCA. Therefore, Group C entities own facilities that require the implementation of the mandatory protections specified in the remaining CIP version 4 Standards.

122. The NERC Compliance Registry as of February 28, 2013 indicated that 1,927 entities were registered for NERC's compliance program. Of these, 1,911 were identified as being U.S. entities. Staff concluded that of the U.S. entities, approximately 1,475 were registered for at least one CIP-applicable function, and therefore must comply with the CIP Reliability Standards. Further, 1,414 are subject CIP version 4. Consistent with the Commission's approach in Order No. 761,[110] we assume that 23 percent (325) of the 1,414 US entities subject to CIP version 4 identified CCAs (Group C). It follows that the remaining 77 percent (1089) of the US entities did not identify any CCAs under CIP version 4 (Group B). This ratio factors into several of the

[104] *See* SP 800–53 Revision 3, Maintenance and Media Protection control families, pages F–66 through F–75.

[105] *See* SP 800–53 Revision 3, control AC–5, pages F–8 and F–9.

[106] *See* SP 800–137, *Information Security Continuous Monitoring (ISCM) for Federal Information Systems and Organizations.* Page vi, ''Information security continuous monitoring (ISCM) is defined as maintaining ongoing awareness of information security, vulnerabilities, and threats to support organizational risk management decisions.''

[107] *See generally* Department of Homeland Security: Cyber Security Procurement Language for Control Systems. See also SP 800–53 Revision 3, System and Services Acquisition control family, pages F–96 through F–105.

[108] 44 U.S.C. 3507(d) (2006).

[109] 5 CFR 1320.11 (2012).

[110] *See* Order No. 761, 139 FERC ¶ 61,058 at P 122, n.162.

calculations needed to estimate the differences in effort among entities in Group B, as compared to Group C.

123. To estimate the change in paperwork burden between CIP version 4 and CIP version 5, we recognize that the entities in all groups will undertake the following paperwork tasks to at least some extent: (1) Create or modify documentation of processes used to identify and classify the cyber assets to be protected under the CIP Reliability Standards; (2) create or modify policy, process and compliance documentation; and (3) continuing documentation of compliance data collection. We estimate the level of burden for each Group as follows:

- All of Group B & C entities, but no more than 10 percent of the Group A entities, will own at least one subject asset classified as Low under the CIP version 5 Standards. We estimate 24 hours [111] per entity to develop its evaluation process documentation for identifying the facilities subject to the standard, and 1,024 hours [112] to develop the required documentation for covered assets. We divide the total burden hours between the second and third years of the compliance period allowed for the assets classified as Low.
- The burden hours for facilities classified as Medium and High are split between the first and second year, since Groups B and C are allowed a 24-month period to bring them into compliance. (The third year figure shown for these rows represents an ongoing effort level). Except for Group C Blackstart facilities, 32 hours [113] per entity are assumed for development of its evaluation process documentation.
- We assume no more than 30 percent of Group B and Group C entities will own one or more of the newly covered transmission facilities classified as Medium. For those that do, we assume 3,200 hours [114] to develop the required policy, compliance and implementation documentation, and 832 hours [115] per entity for ongoing compliance burden.
- With respect to the Blackstart facilities owned by Group C entities, 160 hours [116] per entity are assumed for each entity to modify its policy and evaluation process documentation. We also assume a *reduction* of 728 hours [117] per entity for ongoing compliance documentation that is required under CIP version 4 but is no longer required under CIP version 5.
- For Group C's Medium and High facilities, we assume 1,600 hours [118] per entity to modify the required policy, compliance and implementation documentation, and 416 hours [119] per entity for ongoing compliance.

124. The estimated paperwork burden changes for these entities, as contained in the proposed rule in RM13–5–000, are illustrated in the table below. The information collection burden also varies according to the types of facilities the entities own, as classified by the criteria in CIP–002–5, Attachment 1. To further refine our estimate, we indicate the classes of facilities each group of entities owns in the second column of the table below.

Groups of registered entities	Classes of entity's facilities requiring V5 protections	Number of entities	Total burden hours in Year 1	Total burden hours in Year 2	Total burden hours in Year 3
Group A	Low [120]	61	0	3,804	3,804
Group B	Low [121]	1,089	0	570,636	570,636
Group B	Medium [122]	260	128,960	128,960	64,896
Group C	Low [123]	325	0	170,300	170,300
Group C	Medium [124] (New)	78	1,248	1,248	19,136
Group C	Low [125] (Blackstart)	283	22,640	22,640	−206,024
Group C	Medium or High [126]	325	265,200	265,200	135,200
Totals			418,048	1,163,556	758,716

125. The following shows the average annual cost burden for each group,

[111] Based on assumption of 2 persons per entity, working 15 percent of time for 2 weeks.

[112] Based on assumption of 2 persons per entity, creating required policy documentation per policy (4- low policies), working 40 percent of time for 8 weeks.

[113] Based on assumption of 2 persons per entity, working 20% of time for 2 weeks.

[114] Based on assumption of 1 person per entity, per standard (10) creating policy documentation, working 75 percent of time for 8 weeks, and 1 person per entity, per standard (10) on creating compliance documentation, 25 percent of time for 8 weeks.

[115] Based on assumption of 2 persons per entity, working 20 percent of time for 52 weeks.

[116] Based on assumption of 1 person per entity, per standard (10) modifying policy documentation, working 10 percent of time for 2 weeks, and 1 person per entity, per standard (10) modifying compliance documentation, 10 percent of time for 2 weeks.

[117] Based on assumption of a *reduction* of 2 persons per entity, collecting compliance data, working 20 percent of time for 52 weeks, and an *increase* of 1 person per entity, collecting compliance data, working 5 percent of time for 52 weeks.

[118] Based on assumption of 1 person per entity, per standard (10) modifying compliance documentation, working 50 percent of time for 8 weeks.

[119] Based on assumption of 2 persons collecting compliance data, working 10 percent of time for 52 weeks.

[120] Distribution Providers are the only functional entity type in Group A (*see* section 4, Applicability, of each CIP version 5 Standard), and their facilities are captured only by the Low classification criteria listed in CIP–002–5. The number of entities in this group represent the number of Distribution Providers that are not registered for any additional CIP version 5 applicable functions, including the Load Serving Entity function (and are therefore subject to CIP versions 1–4).

[121] As with Groups A and C, Group B will own Low facilities which were not identified for protections under prior CIP versions. The number of Group B respondents is calculated as 77 percent of the total entities previously subject to the CIP Reliability Standards. (.77 * 1414 = 1,089).

[122] In contrast to CIP version 4, Criterion 2.5 in CIP version 5 identifies new facilities for protection—transmission facilities ≧ 200kV < 300kV—and classifies them as ''Medium.'' Some of these newly-applicable transmission facilities are owned by entities that had not previously identified any CCAs under previous versions, while some of the Criterion 2.5 facilities are owned by entities that previously identified CCAs. Assuming Group B entities constitute 77 percent of the entities to which this criterion potentially applies, 260 entities of the 338 total Transmission Owners (TO) captured by Criterion 2.5 are assigned to Group B, while the remaining 78 are allotted to Group C.

[123] As with Groups A and B, the entities that identified CCAs under CIP version 4 (Group C) will also own facilities newly addressed by CIP version 5 and classified as Low. The number of Group B respondents is calculated as 23 percent of the total entities previously subject to the CIP Reliability Standards. (.23 * 1414 = 325)

[124] This row concerns only the newly subject transmission facilities that are addressed by CIP version 5, Criterion 2.5, as owned by Group C TO entities. *See* the note for Group B Medium above for further explanation. These Medium-rated facilities are broken out in this row, separate from other Medium facilities the entity may own in the

based on the burden hours in the table above: [127]

- Group A: 61 unique entities * 41.5 hrs/entity * $72/hour = $182,000
- Group B: 1,089 unique entities * 448 hrs/entity * $72/hour = $35,127,000
- Group C: 325 unique entities * 889 hrs/entity * $72/hour = $20,803,000

Total average annual paperwork cost for the change in requirements contained in the NOPR in RM13–5 = $56,112,000. (i.e., $182,000 + $35,127,000 + $20,803,000).

126. The estimated hourly rate of $72 is the average loaded cost (wage plus benefits) of legal services ($128.00 per hour), technical employees ($58.86 per hour) and administrative support ($30.18 per hour), based on hourly rates and average benefits data from the Bureau of Labor Statistics.[128]

127. *Title:* Mandatory Reliability Standards, Version 5 Critical Infrastructure Protection Standards.

Action: Proposed Collection FERC–725B.

OMB Control No.: 1902–0248.

Respondents: Businesses or other for-profit institutions; not-for-profit institutions.

Frequency of Responses: On Occasion.

Necessity of the Information: This proposed rule proposes to approve the requested modifications to Reliability Standards pertaining to critical infrastructure protection. The proposed Reliability Standards help ensure the reliable operation of the Bulk-Power System by providing a cyber security framework for the identification and protection of Critical Assets and associated Critical Cyber Assets. As discussed above, the Commission proposes to approve NERC's proposed Version 5 CIP Standards pursuant to section 215(d)(2) of the FPA because they represent an improvement to the currently-effective CIP Reliability Standards.

Internal Review: The Commission has reviewed the proposed Reliability Standards and made a determination that its action is necessary to implement section 215 of the FPA.

128. Interested persons may obtain information on the reporting requirements by contacting the following: Federal Energy Regulatory Commission, 888 First Street NE., Washington, DC 20426 [Attention: Ellen Brown, Office of the Executive Director, email: *DataClearance@ferc.gov*, phone: (202) 502–8663, fax: (202) 273–0873].

129. For submitting comments concerning the collection(s) of information and the associated burden estimate(s), please send your comments to the Commission, and to the Office of Management and Budget, Office of Information and Regulatory Affairs, Washington, DC 20503 [Attention: Desk Officer for the Federal Energy Regulatory Commission, phone: (202) 395–4638, fax: (202) 395–7285]. For security reasons, comments to OMB should be submitted by email to: *oira_submission@omb.eop.gov*. Comments submitted to OMB should include Docket Number RM13–5–000 and OMB Control Number 1902–0248.

V. Regulatory Flexibility Act Certification

130. The Regulatory Flexibility Act of 1980 (RFA) [129] generally requires a description and analysis of proposed rules that will have significant economic impact on a substantial number of small entities. The RFA mandates consideration of regulatory alternatives that accomplish the stated objectives of a proposed rule and that minimize any significant economic impact on a substantial number of small entities. The Small Business Administration's Office of Size Standards develops the numerical definition of a small business.[130] The Small Business Administration has established a size standard for electric utilities, stating that a firm is small if, including its affiliates, it is primarily engaged in the transmission, generation and/or distribution of electric energy for sale and its total electric output for the preceding twelve months did not exceed four million megawatt hours (MWh).[131]

131. The Commission seeks comment on the estimated impact of implementing and complying with the CIP version 5 Reliability Standards. Specifically, the Commission seeks detailed and supported information regarding the impacts in order to better estimate the cost on small businesses.

132. The Commission estimates the NOPR will impact 536 small entities.[132] Of this amount, the Commission estimates that only 14 small entities [133] (2.6 percent of the total number of small entities) may, on average, experience a significant economic impact of $116,000 per entity in the first year, $145,000 in the second year, and $88,000 in the third year.[134] This cost is primarily due to implementation during the compliance period. After the initial implementation the Commission expects the average annual cost per each of the 14 entities to be less than $64,000. The Commission has determined that 2.6 percent of the effected small entities do not represent a ''substantial number'' in terms of the total number of regulated small entities applicable to the NOPR.

133. The Commission estimates that 234 out of the 536 small entities [135] will each experience an average economic impact of $29,000 per year during years two and three.[136] Finally, the Commission estimates that the remaining 288 out of the 536 small entities [137] will only experience a minimal economic impact.

134. Based on the above, the Commission certifies that the proposed Reliability Standards will not have a significant impact on a substantial number of small entities. Accordingly, no initial regulatory flexibility analysis is required.

VI. Environmental Analysis

135. The Commission is required to prepare an Environmental Assessment or an Environmental Impact Statement

High and Medium row below because the level of effort for these Group C TOs entities to protect these newly protected facilities is estimated differently than for the Group B entities, or for other Medium facilities the entity may own.

[125] Blackstart generation and transmission cranking paths are the only types of facilities identified first for more specified security controls under CIP version 4, Criteria 1.4 and 1.5, but then subject only to Low mandatory security controls under CIP version 5, Criterion 3.4. The number of entities in this row represents 23 percent of the sum of all registered Generation Operators to account for Blackstart Resources and all TOs to account for cranking paths.

[126] Except for the Blackstart facilities noted above, the facilities that Group C entities identify as CCAs under CIP version 4 will be rated for Medium or High security controls under CIP version 5.

[127] The total cost figures are rounded to the nearest thousand. The ''hours per entity'' figures are averages over three years for the whole group. Some entities within a group may experience higher or lower hourly impact (as illustrated in the burden table) depending on entity type and assets owned.

[128] *See http://bls.gov/oes/current/naics2_22.htm* and *http://www.bls.gov/news.release/ecec.nr0.htm*.

[129] 5 U.S.C. 601–612 (2006).

[130] 13 CFR 121.101 (2012).

[131] 13 CFR 121.201, Sector 22, Utilities & n.1.

[132] Based on a comparison of the NERC Compliance Registry (as of February 28, 2013) and Energy Information Administration Form 861 (available at *http://www.eia.gov/electricity/data/eia861/index.html*).

[133] The 14 small entities in this class represent small Transmission Owners assumed to fall under the Medium classification and thus experience a greater impact than other small entities. These same entities also experience the impact associated with the Low classification.

[134] These costs are based on an estimated 4,600 hours of total work per entity over three years at $59/hour and $15,000 of non-labor costs.

[135] This figure represents the number of small entities that own assets covered by CIP version 5. This number does not include the 14 significantly impacted entities.

[136] This cost figure is based on an estimated 268 hours of total work per entity for each of years two and three combined at $72/hour, and $7,500 of non-labor costs for each of years two and three.

[137] The number of small Distribution Providers assumed to not own assets covered by CIP version 5.

for any action that may have a significant adverse effect on the human environment.[138] The Commission has categorically excluded certain actions from this requirement as not having a significant effect on the human environment. Included in the exclusion are rules that are clarifying, corrective, or procedural or that do not substantially change the effect of the regulations being amended.[139] The actions proposed here fall within this categorical exclusion in the Commission's regulations.

VII. Comment Procedures

136. The Commission invites interested persons to submit comments on the matters and issues proposed in this notice to be adopted, including any related matters or alternative proposals that commenters may wish to discuss. Comments are due June 24, 2013. Comments must refer to Docket No. RM13–5–000, and must include the commenter's name, the organization they represent, if applicable, and their address in their comments.

137. The Commission encourages comments to be filed electronically via the eFiling link on the Commission's Web site at *http://www.ferc.gov*. The Commission accepts most standard word processing formats. Documents created electronically using word processing software should be filed in native applications or print-to-PDF format and not in a scanned format. Commenters filing electronically do not need to make a paper filing.

138. Commenters that are not able to file comments electronically must send an original of their comments to: Federal Energy Regulatory Commission, Secretary of the Commission, 888 First Street NE., Washington, DC 20426.

139. All comments will be placed in the Commission's public files and may be viewed, printed, or downloaded remotely as described in the Document Availability section below. Commenters on this proposal are not required to serve copies of their comments on other commenters.

VIII. Document Availability

140. In addition to publishing the full text of this document in the **Federal Register**, the Commission provides all interested persons an opportunity to view and/or print the contents of this document via the Internet through the Commission's Home Page (*http://www.ferc.gov*) and in the Commission's Public Reference Room during normal business hours (8:30 a.m. to 5:00 p.m. Eastern time) at 888 First Street NE., Room 2A, Washington, DC 20426.

141. From the Commission's Home Page on the Internet, this information is available on eLibrary. The full text of this document is available on eLibrary in PDF and Microsoft Word format for viewing, printing, and/or downloading. To access this document in eLibrary, type the docket number excluding the last three digits of this document in the docket number field.

142. User assistance is available for eLibrary and the Commission's Web site during normal business hours from the Commission's Online Support at (202) 502–6652 (toll free at 1–866–208–3676) or email at *ferconlinesupport@ferc.gov*, or the Public Reference Room at (202) 502–8371, TTY (202) 502–8659. Email the Public Reference Room at *public.referenceroom@ferc.gov.*

By direction of the Commission.

Nathaniel J. Davis, Sr.,

Deputy Secretary.

[FR Doc. 2013–09643 Filed 4–23–13; 8:45 am]

BILLING CODE 6717–01–P

[138] *Regulations Implementing the National Environmental Policy Act of 1969,* Order No. 486, 52 FR 47897 (Dec. 17, 1987), FERC Stats. & Regs., Regulations Preambles 1986–1990 ¶ 30,783 (1987).

[139] 18 CFR 380.4(a)(2)(ii).

DEPARTMENT OF DEFENSE

Office of the Secretary

32 CFR Part 329

[Docket ID: DOD–2012–OS–0161]

RIN 0790–AI96

National Guard Bureau Privacy Program

AGENCY: Department of Defense.

ACTION: Proposed rule.

SUMMARY: This proposed rule establishes policies and procedures for the National Guard Bureau (NGB) Privacy Program. The NGB is a Joint Activity of the Department of Defense (DoD). This rule will cover the privacy policies and procedures associated with records created and under the control of the Chief, NGB that are not otherwise covered by existing DoD, Air Force, or Army rules.

DATES: Comments must be received by June 24, 2013.

ADDRESSES: You may submit comments, identified by docket number and or RIN number and title, by any of the following methods:

- *Federal eRulemaking Portal: http://www.regulations.gov.* Follow the instructions for submitting comments.
- *Mail:* Federal Docket Management System Office, 4800 Mark Center Drive, East Tower, Suite 02G09, Alexandria, VA 22350–3100.

Instructions: All submissions received must include the agency name and docket number or Regulatory Information Number (RIN) for this FR document. The general policy for comments and other submissions from members of the public is to make these submissions available for public viewing on the Internet at *http://regulations.gov* as they are received without change, including any personal identifiers or contact information.

FOR FURTHER INFORMATION CONTACT: Ms. Jennifer Nikolaisen, 571–256–7838.

SUPPLEMENTARY INFORMATION:

Executive Summary

I. Purpose and Authority of the Regulatory Action

a. *Purpose:* This part implements the policies and procedures outlined in 5 U.S.C. 552a, Office of Management and Budget (OMB) Circular No. A–130, and 32 CFR part 310. This part provides guidance and procedures for implementing the National Guard Bureau Privacy Program. The NGB is a Joint Activity of the DoD pursuant to 10 U.S.C. 10501

b. *Authority:* Public Law 93–579, 88 Stat. 1986 (5 U.S.C. 552a).

II. Summary of the Major Provisions of the Regulatory Action

This provision is made to establish the Privacy Program for the National Guard Bureau.

III.

This regulatory action imposes no monetary costs to the Agency or public. The benefit to the public is the accurate reflection of the Agency's Privacy Program to ensure that policies and procedures are known to the public.

Regulatory Procedures

Executive Order 12866, ''Regulatory Planning and Review'' and Executive Order 13563, ''Improving Regulation and Regulatory Review''

It has been determined that 32 CFR part 329 is not a significant regulatory action. The rule does not:

(1) Have an annual effect on the economy of $100 million or more or adversely affect in a material way the economy; a section of the economy; productivity; competition; jobs; the environment; public health or safety; or State, local, or tribal governments or communities;

(2) Create a serious inconsistency or otherwise interfere with an action taken or planned by another Agency;

(3) Materially alter the budgetary impact of entitlements, grants, user fees, or loan programs, or the rights and obligations of recipients thereof; or

(4) Raise novel legal or policy issues arising out of legal mandates, the President's priorities, or the principles set forth in these Executive Orders.

Unfunded Mandates Reform Act (Sec. 202, Pub. L. 104–4)

It has been certified that this rule does not contain a Federal mandate that may result in the expenditure by State, local and tribal governments, in aggregate, or by the private sector, of $100 million or more in any one year.

Public Law 96–354, ''Regulatory Flexibility Act'' (5 U.S.C. 601)

It has been certified that this rule is not subject to the Regulatory Flexibility Act (5 U.S.C. 601) because it would not, if promulgated, have a significant economic impact on a substantial number of small entities.

Public Law 96–511, ''Paperwork Reduction Act'' (44 U.S.C. Chapter 35)

It has been certified that this rule does not impose reporting or recordkeeping requirements under the Paperwork Reduction Act of 1995.

Executive Order 13132, ''Federalism''

It has been certified that this rule does not have federalism implications, as set forth in Executive Order 13132. This rule does not have substantial direct effects on:

(1) The States;

(2) The relationship between the National Government and the States; or

(3) The distribution of power and responsibilities among the various levels of Government.

List of Subjects in 32 CFR Part 329

Privacy.

Accordingly, 32 CFR part 329 is proposed to be added to read as follows:

PART 329—NATIONAL GUARD BUREAU PRIVACY PROGRAM

Sec.
329.1 Purpose.
329.2 Applicability.
329.3 Definitions.
329.4 Policy.
329.5 Responsibilities.
329.6 Procedures.
329.7 Exemptions.

Authority: Pub. L. 93–579, 88 Stat. 1986 (5 U.S.C. 552a).

§ 329.1 Purpose.

This part implements the policies and procedures outlined in 5 U.S.C. 552a, Office of Management and Budget (OMB) Circular No. A–130, and 32 CFR part 310. This part provides the responsibilities, guidance, and procedures for the National Guard Bureau (NGB) to comply with Federal and DoD Privacy requirements.

§ 329.2 Applicability.

(a) This part applies to the NGB and the records under the custody and control of the Chief, NGB, as defined by DoD Directive (DoDD) 5105.77, entitled ''National Guard Bureau'' (Available at *http://www.dtic.mil/whs/directives/corres/pdf/510577p.pdf*).

(b) It does not apply to the National Guards of the States, Territories, and District of Columbia, except to the extent that they are in the possession of NGB records or relying on a System of Records Notice (SORN) published by NGB for their authority to maintain 5 U.S.C. 552a protected records.

§ 329.3 Definitions.

All terms used in this part which are defined in 5 U.S.C. 552a shall have the same meaning herein.

Access. Allowing individuals to review or receive copies of their records.

Accuracy. Within sufficient tolerance for error to assure the quality of the record in terms of its use in making a determination.

Agency. Any Executive department, military department, Government corporation, Government controlled corporation, or other establishment in the executive branch of the [federal] Government (including the Executive Office of the President), or any independent regulatory agency (as defined by 5 U.S.C. 552a).

Amendment. The process of adding, deleting, or changing information in a System of Records (SOR) to make the data accurate, relevant, timely, and/or complete.

Appellate Authority. The individual with authority to deny requests for access or amendment of records under 5 U.S.C. 552a.

Breach. A loss of control, compromise, unauthorized disclosure, unauthorized acquisition, unauthorized access, or any similar term referring to situations where a person other than authorized users (with an official need to know), and for an other than authorized purpose has access or potential access to personally identifiable information, whether physical or electronic. A breach can include identifiable information in any form. (As defined by DoD Director of Administration and Management Memo, 5 Jun 2009 entitled ''Safeguarding Against and Responding to the Breach of Personally Identifiable Information (PII)'' (Available at *http://www.dod.mil/pubs/foi/privacy/docs/DA_M6_5_2009 Responding_toBreach_of_PII*).)

Chief, National Guard Bureau (CNGB). A principal advisor to the Secretary of Defense, through the Chairman of the Joint Chiefs of Staff, on matters involving non-federalized National Guard forces and on other matters as determined by the Secretary of Defense; and the principal adviser to the Secretary of the Army and the Chief of Staff of the Army, and to the Secretary of the Air Force and the Chief of Staff of the Air Force, on matters relating to the National Guard, the Army National Guard of the United States, and the Air National Guard of the United States. The CNGB also represents the National Guard on the Joint Chiefs of Staff.

Completeness. All elements necessary for making a determination are present before such determination is made.

Computer Matching Program. A program that matches the personal records in computerized database of two or more Federal agencies.

Denial Authority. The individual with authority to deny requests for access or amendment of records under 5 U.S.C. 552a.

Determination. Any decision affecting an individual which, in whole or in part, is based on information contained in the record and which is made by any person or agency.

Directorate/Division. The terms directorate and division are used to refer to suborganizations within the NGB. The Joint Staff and Air Guard Readiness Center uses the term ''Directorate'' to refer to their suborganizations and the Army Guard Readiness Center uses the term ''Division'' to refer to their suborganizations.

Disclosure. Giving information from a system, by any means, to anyone other than the record subject.

Disclosure Accounting. A record of all disclosures made from a SOR, except for disclosures made to Department of Defense personnel for use in performance of their official duties or disclosures made as required by 5 U.S.C. 552.

Federal Register *(FR).* A daily publication of notices and rules issued by Federal Agencies and the President printed on a daily Federal workday.

Individual. A citizen of the United States or an alien lawfully admitted for permanent residence. (As defined by 5 U.S.C. 552a)

Maintain. Maintain, collect, use or disseminate. (As defined by 5 U.S.C. 552a)

Memorandum of Agreement. A written understanding (agreement)

between parties to cooperatively work together on an agreed upon project or meet an agreed objective.

Memorandum of Understanding. A written agreement between parties describing a bilateral or multilateral agreement between parties.

Necessary. A threshold of need for an element of information greater than mere relevance and utility.

Personal Information. Information about an individual other than items of public record.

Personally Identifiable Information (PII). Personal information. Information about an individual that identifies, links, relates, or is unique to, or describes him or her. Information which can be used to distinguish or trace an individual's identity which is linked or linkable to a specified individual.

Privacy Act (5 U.S.C. 552a) Request. An oral (in person) or written request by an individual to access his or her records in a SOR.

Privacy Act (5 U.S.C. 552a) Statement (PAS). A statement given to an individual when soliciting personal information that will be maintained in a SOR that advises them of the authority to collect information, the principal purpose(s) that the information will be used for, the routine uses on how the information will be disclosed outside of the agency, and whether it is mandatory or voluntary to provide the information and any consequences for not providing the information.

Privacy Impact Assessment (PIA). A written assessment of an information system that addresses the information to be collected, the purpose and intended use; with whom the information will be shared; notice or opportunities for consent to individuals; how the information will be secured; and whether a new SOR is being created under 5 U.S.C. 552a. Privacy Impact Assessments are required for all information systems and electronic collections that collect, maintain, use, or disseminate personally identifiable information about members of the public (this includes contractors and family members), under Public Law 107–347, Section 208 of the E-Government Act of 2002. DoD Instruction 5400.16, entitled ''Department of Defense Privacy Impact Assessment (PIA)'' (Available at *http://www.dtic.mil/whs/directives/corres/pdf/540016p.pdf*), provides additional requirements for PIAs, including a requirement to write a PIA on any information systems or electronic collection of PII on Federal personnel.

Protected Health Information (PHI). Any information about health status, provision of health care, or payment for health care that can be linked to a specific individual.

Record. Any item, collection, or grouping of information about an individual that is maintained by an agency, including, but not limited to, the individual's his education, financial transactions, medical history, and criminal or employment history and that contains his name, or the identifying number, symbol, or other identifying particular assigned to the individual, such as a finger or voice print or a photograph (As defined by 5 U.S.C. 552a).

Relevance. Limitation to only those elements of information that clearly bear of the determination(s) for which the records are intended.

Routine Use. The disclosure of a record outside the DoD for a use that is compatible with the purpose for which the information was collected and maintained by the DoD. The routine use must be included in the published system notice for the SOR involved. The DoD Blanket Routine Uses, found in 32 CFR part 310, Appendix C are applicable to all SORNs published by DoD.

System Manager. The official who is responsible for managing a SOR, including policies and procedures to operate and safeguard it. Local System Managers operate record systems or are responsible for the records that are maintained in decentralized locations but are covered by a SORN published by another DoD activity or a Government-Wide SORN.

System of Records (SOR). A group of any records under the control of any agency from which information is retrieved by the name of the individual or by some identifying number, symbol, or other identifying particular assigned to the individual.

System of Records Notice (SORN). The official public notice published in the FR of the existence and content of the SOR. As required by 5 U.S.C. 552a and 32 CFR part 310, Appendix E. The notice shall include:

(1) The name and location of the system,

(2) The categories of individuals on whom records are maintained in the system,

(3) The categories of records maintained in the system,

(4) Each routine use of the records contained in the system, including the categories of users and the purpose of such use,

(5) The policies and practices of the agency regarding storage, retrievability, access controls, retention, and disposal of the records,

(6) The title and business address of the agency official who is responsible for the SOR,

(7) The agency procedures whereby an individual can be notified at his request if the SOR contains a record pertaining to him,

(8) The agency procedures whereby an individual can be notified at his request how he can gain access to any record pertaining to him contained in the SOR, and how he can contest its contents; and

(9) The categories of sources of records in the system.

Timeliness. Sufficiently current to ensure that any determination based on the record will be accurate and fair.

§ 329.4 Policy.

In accordance with 32 CFR part 310, it is NGB's policy that:

(a) Personal information contained in any SOR maintained by any NGB organization will be safeguarded to the extent authorized by 5 U.S.C. 552a, Appendix I of Office of Management and Budget Circular No. A–130, and any other applicable legal requirements.

(b) NGB will collect, maintain, use, and disseminate personal information only when it is relevant and necessary to achieve a purpose required by a statute or Executive Order.

(c) NGB will collect personal information directly from the individuals to whom it pertains to the greatest extent possible and will provide individuals a PAS at the time of collection when the information being collected will be filed and/or retrieved by the subject's name or other unique identifier. The PAS will contain the following elements, as required by 5 U.S.C. 552a:

(1) The statutory authority or Executive Order that allows for the solicitation,

(2) The intended use/purpose that will be made of the information collected,

(3) The routine uses that may be made of the information collected; and

(4) Whether it is mandatory or voluntary for the individual to disclose the requested information and the non-punitive effects on the individual for not providing all or any part of the requested information. Collection can only be mandatory if the statutory authority or Executive Order cited provides a penalty for not providing the information.

(d) NGB offices maintaining records and information about individuals will ensure that such data is protected from unauthorized access, use, dissemination, disclosure, alteration, and/or destruction. Offices will

establish safeguards to ensure the security of personal information is protected from threats or hazards that might result in substantial harm, embarrassment, inconvenience, or unfairness to the individual using guidelines found in 32 CFR part 310, subpart B, 32 CFR part 310, Appendix A, and DoD Manual (DoDM) 5200.01, Volume 4, entitled ''DoD Information Security Program: Controlled Unclassified Information (CUI)'' (Available at *http://www.dtic.mil/whs/directives/corres/pdf/520001_vol4.pdf*).

(e) NGB offices shall permit individuals to access and have a copy of all or any portion of records about them, unless an exemption for the system has been properly established (see 5 U.S.C. 552a, 32 CFR part 310, subparts D and F, and section 7 of 32 CFR part 329). Individuals requesting access to their record will also receive concurrent consideration under 5 U.S.C. 552 and 32 CFR part 286.

(f) NGB offices will permit individuals an opportunity to request that records about them be corrected or amended (see 5 U.S.C. 552a, 32 CFR part 310, subpart D, and part 6 of 32 CFR part 329).

(g) Any records about individuals that are maintained by the NGB will be maintained with such accuracy, relevance, timeliness, and completeness as is reasonably necessary to assure fairness to the individual before making any determination about the individual or before making the record available to any recipient pursuant to a routine use.

(h) NGB will keep no record that describes how individuals exercise their rights guaranteed by the First Amendment, unless expressly authorized by statute or by the individual to whom the records pertain, or is pertinent to and within the scope of an authorized law enforcement activity.

(i) NGB will notify individuals whenever records pertaining to them are made available under compulsory legal processes, if such process is a matter of public record.

(j) NGB will assist individuals in determining what records pertaining to them are being collected, maintained, used, or disseminated.

(k) NGB offices and personnel, including contractors, maintaining and having access to records and information about individuals will manage them and conduct themselves so as to avoid the civil liability and criminal penalties provided for under 5 U.S.C. 552a.

§ 329.5 Responsibilities.

(a) *Chief of the National Guard Bureau (CNGB).* The CNGB, under the authority, direction, and control of the Secretary of Defense (SecDef), approves and establishes overall policy, direction, and guidance for the NGB privacy program and promulgates privacy policy for the non-Federalized National Guard.

(b) *NGB Chief Counsel.* The NGB Chief Counsel, under the authority, direction, and control of the CNGB, shall:

(1) Serve as the National Guard Senior Component Official for Privacy (SCOP) pursuant to part 32 CFR part 310, subpart A.

(2) Direct and administer the Privacy Program for the NGB as well as the National Guard of the States, Territories, and the District of Columbia as it pertains to the maintenance of records protected by 5 U.S.C. 552a, other Federal laws on privacy, and OMB and DoD Privacy policies.

(3) Ensure implementation of and compliance with standards and procedures established by 5 U.S.C. 552a, OMB A–130, 32 CFR part 310, and this part.

(4) Serve as the appellate authority on denials of access or amendment.

(5) Direct the implementation all aspects of 5 U.S.C. 552a, OMB A–130, 32 CFR part 310, this part, and other Federal laws on privacy, and OMB and DoD Privacy policies.

(c) *Chief of the Office of Information and Privacy (OIP).* The Chief of the OIP, under the authority, direction, and control of the NGB Chief Counsel, shall:

(1) Oversee the National Guard's compliance with 5 U.S.C. 552a, OMB A–130, 32 CFR part 310, this part, and other Federal laws on privacy, and OMB and DoD Privacy policies.

(2) Issue policy and guidance as it relates to 5 U.S.C. 552a and other Federal and DoD Privacy requirements.

(3) Collect, consolidate, and submit Privacy reports to the Defense Privacy and Civil Liberties Office (DPCLO), or the respective service (Air Force or Army) that the reporting of information pertains to. This includes, but is not limited to:

(i) Personally Identifiable Information (PII) Breach Reports required by 32 CFR part 310, subpart B,

(ii) Quarterly Training Reports, SORN Reviews, Privacy Complaints, and Privacy Officer Activity Reports required by 32 CFR part 310, subpart I; and,

(iii) Reports pursuant to sec. D of 44 U.S.C. 3541 and Public Law 17–347.

(4) Submit all approved SORNs to the DPCLO or the respective service that has the statutory authority to publish the SORN for publication in the FR.

(5) Refer inquiries about access, amendments of records, and general and specific exemptions listed in a SORN to the appropriate System Manager.

(6) Review all instructions, directives, publications, policies, Memorandums of Agreement (MOA), Memorandums of Understanding (MOU), data sharing agreements, data transfer agreements, data use agreements, surveys (including web-based or electronic), and forms that involve or discuss the collection, retention, access, use, sharing, or maintenance of PII are to ensure compliance with this part.

(7) Make training resources available to NGB personnel, including contractors, regarding 5 U.S.C. 552a, OMB A–130, 32 CFR part 310, compliance with this part, and other Federal and DoD Privacy requirements.

(d) *Chief of Administrative Law.* The Chief of Administrative Law shall serve as the initial denial authority (IDA) to deny official requests for access or amendment to an individual's record pursuant to a published NGB SORN under 5 U.S.C. 552a or amendments to such records.

(e) *Chief of Litigation and Employment Law.* The Chief of Litigation and Employment Law will notify the Chief of the OIP of any complaint citing 5 U.S.C. 552a is filed in a U.S. District Court against the NGB, or any employee of NGB using the procedures outlined in section 6 of 32 U.S.C. part 329.

(f) *NGB Comptroller/Director of Administration and Management (DA&M).* The NGB Comptroller/DA&M shall ensure appropriate Federal Acquisition Regulation (FAR) (Available at *https://www.acquisition.gov/far/*) and Defense Federal Acquisition Regulation Supplement (DFARS) (Available at *http://www.acq.osd.mil/dpap/dars/dfarspgi/current/index.html*) clauses (FAR Subpart 24.1 related to 5 U.S.C. 552a and FAR subpart 24.2 related to 5 U.S.C. 552, as well as DFARS clauses 52.224–1 and/or 52.224–2) are included in all contracts that provide for contractor personnel to have access or maintain records, including records in information systems, that are covered by 5 U.S.C. 552a or that contain PII.

(g) *NGB Directorates/Divisions.* All NGB directorates/divisions maintaining records containing PII or that have personnel that have access to PII shall:

(1) Ensure that a SORN is published in the FR before collection of any information subject to 5 U.S.C. 552a is scheduled to begin.

(2) Ensure System Managers comply with all responsibilities outlined in

section 5(h) of 32 U.S.C. part 329. This includes referring any proposed denials of access or amendment under 5 U.S.C. 552a to the Chief of the OIP within 10 working days.

(3) Evaluate Privacy requirements for information systems and electronic collection or maintenance of PII in the early stages of system acquisition/development. This includes completing a PIA in accordance with the requirements of Public Law 107–347, Section 208 of the E-Government Act of 2002, and DoD 5400.16–R.

(4) Ensure personnel, including contractors, who have access to PII complete appropriate Privacy training as required by 5 U.S.C. 552a, 32 CFR part 310, subpart H, and Part II of DoD Policy ''Safeguarding Against and Responding to Breaches of PII'' as follows:

(i) Orientation Training: Training that provides individuals with a basic understanding of the requirements of 5 U.S.C. 552a as it applies to the individual's job performance. The training is for all personnel, as appropriate, and should be a prerequisite to all other levels of training.

(ii) Specialized Training: Training that provides information as to the application of specific provisions of this part to specialized areas of job performance. Personnel of particular concern include, but are not limited to personnel specialists, finance officers, special investigators, paperwork managers, public affairs officials, information technology professionals, and any other personnel responsible for implementing or carrying out functions under this part.

(iii) Management Training: Training that provides managers and decision makers considerations that they should take into account when making management decisions regarding the Privacy program.

(iv) Privacy Act (5 U.S.C. 552a) SOR Training: All individuals who work with a Privacy Act (5 U.S.C. 552a) SOR are trained on the provisions of the 5 U.S.C. 552a SORN(s) they work with, 32 CFR part 310, and this part.

(5) Ensure all instructions, directives, publications, policies, MOAs, MOUs, data sharing agreements, data transfer agreements, data use agreements, surveys (including web-based or electronic surveys), and forms that involve the collection, retention, use, access, sharing, or maintenance of PII are coordinated with the Chief of the OIP.

(6) Ensure that any suspected or confirmed breaches of PII, or potential breaches of PII, are immediately reported to the Chief of the OIP in accordance with NGB Memorandum 380–16/33–361 (Available at *http://www.nationalguard.mil/sitelinks/links/NGB%20Memorandum%20380-16%2033-361,%20PII%20Incident%20Response%20Handling.pdf*).

(7) Ensure policies and administrative processes within their directorates are evaluated to ensure compliance with the procedures in this part.

(h) *System Managers.* System Managers will:

(1) Report any changes to their existing SORN(s) to the Chief of the OIP for publishing in the FR at least 90 working days before the intended change to the system.

(2) Review their published SORN(s) on a biennial basis and submit updates to the Chief of the OIP as necessary.

(3) Ensure appropriate training is provided for all users, to include contractors, which have access to records covered by their published system notice.

(4) Ensure safeguards are in place to protect all records containing PII (electronic, paper, etc.) from unauthorized access, use, disclosure, alteration, and/or destruction using guidelines found in 32 CFR part 310, subpart B, 32 CFR part 310, Appendix 1, and DoDM 5200.01, Volume 4.

(5) Assist in responding to any complaints and inquiries regarding the collection or maintenance of, or access to information covered by their published SORN(s).

(6) Process all 5 U.S.C. 552a requests for access and amendment, as outlined in section 6 of 32 CFR part 329.

(7) Maintain a record of disclosures for any records covered by a SORN using a method that complies with 32 CFR part 310, subpart E when disclosing records outside of the agency (DoD). Such disclosures will only be made when permitted by a Routine Use published in the SORN.

(i) As required by 5 U.S.C. 552a and 32 CFR part 310, subpart E, the disclosure accounting will be maintained for 5 years after the disclosure, or for the life of the record, whichever is longer. The record may be maintained with the record disclosed, or in a separate file within the office's official record keeping system.

(ii) Pursuant to 5 U.S.C. 552a and 32 CFR part 310, subpart E, the disclosure accounting will include the release date, a description of the information released, the reason for the release; and, the name and address of the recipient.

§ 329.6 Procedures.

(a) *Publication of Notice in the FR.*

(1) A SORN shall be published in the FR of any record system meeting the definition of a SOR, as defined by 5 U.S.C. 552a.

(2) System Managers shall submit notices for new or revised SORNs through their Director to the Chief of the OIP for review at least 90 working days prior to implementation.

(3) The Chief of the OIP shall forward complete SORNs to the Defense Privacy and Civil Liberties Office (DPCLO), or the respective service that has the statutory authority to publish the SORN, for review and publication in the FR in accordance with 32 CFR part 310, subpart G. Following the OMB comment period, the public is given 30 days to submit written data, views, or arguments for consideration before a SOR is established or modified.

(b) *Access to Systems of Records Information.*

(1) As provided by 5 U.S.C. 552a, records shall be disclosed to the individual they pertain to and under whose individual name or identifier they are filed, unless exempted by the provisions in 32 CFR part 310, subpart F, and section 7 of 32 CFR part 329. If an individual is accompanied by a third party, or requests a release to a third party, the individual shall be required to furnish a signed access authorization granting the third party access conditions according to 32 CFR part 310, subpart D.

(2) Individuals seeking access to records that pertain to themselves, and that are filed by their name or other personal identifier, may submit the request in person, by mail, or by email. All requests for access must be in accordance with these procedures:

(i) Any individual making a request for access to records in person shall show personal identification to the appropriate System Manager, as identified in the SORN published in the FR, to verify his or her identity, according to 32 CFR part 310, subpart D.

(ii) Any individual making a request for access to records by mail or email shall address such request to the System Manager. If the System Manager is unknown, the individual may inquire to NGB–JA/OIP: AHS–Bldg 2, Suite T319B, 111 S. George Mason Drive, Arlington, VA 22204–1382, or email *privacy@ng.army.mil* for assistance in locating the System Manager.

(iii) Requests for access shall include a mailing address where the records should be sent and include either a signed notarized statement or a signed unsworn declaration to verify his or her identity to ensure that they are seeking to access records about themselves and not, inadvertently or intentionally, the records of others. The Privacy Act (5 U.S.C. 552a) provides a penalty of a

misdemeanor and a fine of not more than $5,000 for any person who knowingly and willfully requests or obtains any record concerning an individual from an agency under false pretenses. If making a declaration, it shall read as follows:

(A) Inside the US: ''I declare (or certify, verify, or state) under penalty of perjury that the foregoing is true and correct. Executed on (date). (Signature).''

(B) Outside the US: ''I declare (or certify, verify, or state) under penalty of perjury under the laws of the United States of America that the foregoing is true and correct. Executed on (date). (Signature).''

(iv) All requests for records shall describe the record sought and provide sufficient information to enable the records to be located (e.g. identification of the SORN, approximate date the record was initiated, originating organization, and type of document).

(v) All requesters shall comply with the procedures in 32 CFR part 310, subpart D for inspecting and/or obtaining copies of requested records.

(vi) Requestors affiliated with the DoD may not use official government supplies or equipment to include mailing addresses, work phones/faxes, or DoD-issued email accounts to make requests. If requests are received using DoD equipment, the requestor will be advised to make a new request, using non-DoD equipment, and processing of their request will begin only after such new request is received.

(3) The System Manager shall mail a written acknowledgement of the request for access to the individual within 10 working days of receipt. The acknowledgement shall identify the request and may, if necessary, request any additional information needed to access the record, advising the requestor that they have 20 calendar days to reply. No acknowledgement is necessary if the request can be reviewed and processed, to include notification to the individual of a grant or denial of access, within the 10 working day period. Whenever practical, the decision to grant or deny access shall be made within 30 working days. For requests presented in person, written acknowledgement may be provided at the time the request is presented.

(4) When a request for access is received, System Managers shall promptly take one of three actions on requests to access records:

(i) If no portions of the record are exempt, pursuant to the published SORN, 32 CFR part 310, subpart F, and section 7 of 32 CFR part 329, the request for access shall be granted and the individual will be provided access to all records about him or her. If there is information within the record not about the record subject (e.g. third party information) that information will be removed and referred to the Chief of the OIP for processing under 5 U.S.C. 552, pursuant to 32 CFR part 286.

(ii) If the System Manager finds that the record, or portions of the record, is exempt from access pursuant to the published SORN, 32 U.S.C. part 310, subpart F, and section 7 of 32 U.S.C. part 329, they will refer the recommended denial to the Chief of the OIP, through their Director, within 10 working days of receipt. The referral will include the following:

(A) Written recommendation for denial explaining which portion(s) of the record should be exempt from access and a discussion for why the record, or portions of the record, should be denied.

(B) The record, or portions of the record, being recommended for denial. If only portions of records are recommended for denial they must be clearly marked or highlighted.

(C) The original request and any correspondence with the requestor.

(D) A clean copy of the record.

(iii) If the request for access pertains to a record controlled and maintained by another Federal agency, but in the temporary custody of the NGB, the records are the property of the originating Component. Access to these records is controlled by the system notice and rules for the originating component/agency. Such requests shall be referred to the originating component/agency and the requestor will be notified in writing of the referral and contact information for the component/agency.

(5) The Chief of the OIP will use the following procedures for processing any recommended denials of access:

(i) The specific reason for denial cited by the System Manager will be evaluated and a recommendation will be presented to the denial authority.

(ii) If the request for access is denied, a written letter will be sent to the requestor using procedures outlined in 32 CFR part 310, subpart D. The requestor will be advised they have 60 calendar days to appeal the decision to deny access. Appeals should be sent to: NGB Chief Counsel, 1636 Defense Pentagon, Room 1D164, Washington DC 20301–1636. The requester must provide proof of identity or a sworn declaration with their appeal, as outlined in 32 CFR part 310, subpart D.

(iii) If the request for access should be granted, the access request will be directed back to the System Manager to process.

(6) The Chief Counsel will use the following procedures for any appeals received:

(i) The Chief Counsel will notify the Chief of the OIP that an appeal has been received and will request the administrative record of the initial denial.

(ii) The Chief of the OIP will provide an exact copy of all records from the initial denial to the Chief Counsel within 10 working days.

(iii) The Chief Counsel will review the appeal and make a final determination on whether to grant or deny the appeal.

(A) If the appellate authority denies the appeal, he or she will provide a formal written notification to the requestor using the procedures outlined in 32 CFR part 310, subpart D and will provide a copy of the response to the Chief of the OIP.

(B) If the appellate authority grants the appeal, he or she will notify the Chief of the OIP and the Directorate that recommended the denial that the individual is being given access to the record. The Chief Counsel will provide a subsequent notification to the requestor advising that his or her appeal has been granted, and will provide the requestor access to his or her record.

(iv) All appeals should be processed within 30 working days after receipt by the Chief Counsel. If the Chief Counsel determines that a fair and equitable review cannot be made within that time, the individual shall be informed in writing of the reasons for the delay and of the approximate date the review is expected to be completed.

(7) There is no requirement that an individual be given access to records that are not in a group of records that meet the definition of a SOR in 5 U.S.C. 552a.

(8) No verification of identity shall be required of an individual seeking access to records that are otherwise available to the public.

(9) Individuals shall not be denied access to a record in a SOR about themselves because those records are exempted from disclosure under 32 CFR part 285. Individuals may only be denied access to a record in a SOR about themselves when those records are exempted from the access provisions of 32 CFR part 310, subpart F, and this part.

(10) Individuals shall not be denied access to their records for refusing to disclose their Social Security Number (SSN), unless disclosure of the SSN is required by statute, by regulation adopted before January 1, 1975, or if the record's filing identifier and only means

of retrieval is by the SSN (reference 5 U.S.C. 552a, note, Executive Order 9397).

(c) *Access to Records or Information Compiled for Law Enforcement Purposes.*

(1) All requests by individuals to access records about themselves are processed under 5 U.S.C. 552, 5 U.S.C. 552a as well as 32 CFR part 286, 32 CFR part 310, subpart D to give requesters a greater degree of access to records on themselves, regardless of which Act is cited by the requestor for processing.

(2) Records (including those in the custody of law enforcement activities) that have been incorporated into a SOR exempted from the access conditions of 5 U.S.C. 552a and 32 CFR part 310, subpart D will be processed in accordance with 5 U.S.C. 552a, 32 CFR part 310, subpart D, and this part. Individuals shall not be denied access to records solely because they are in an exempt system. They will have the same access that they would receive under 5 U.S.C. 552 and 32 CFR part 286.

(3) Records systems exempted from access conditions will be processed under 5 U.S.C. 552 and 32 CFR part 286, or 5 U.S.C. 552a and 32 CFR part 310, subpart D, depending upon which gives the greater degree of access.

(4) If a non-law enforcement element has temporary custody of a record otherwise exempted from access under 32 CFR part 310, subpart F for the purpose of adjudication or personnel actions, they shall refer any such access request, along with the records, to the originating agency and notify the requestor of the referral.

(d) *Access to Illegible, Incomplete, or Partially Exempt Records.*

(1) An individual shall not be denied access to his or her record or a copy of the record solely because the physical condition or the format of the record does not make it readily available (e.g. record is in a deteriorated state or on a magnetic tape). The document will be prepared as an extract, or it will be exactly recopied.

(2) If a portion of the record contains information that is exempt from access, an extract or summary containing all of the information in the record that is releasable shall be prepared by the System Manager.

(3) When the physical condition of the record makes it necessary to prepare an extract for release, the extract shall be prepared so that the requestor will understand it.

(4) The requester shall be given access to any deletions or changes to records that are accessible.

(e) *Access to Medical Records.*

(1) Medical records and other protected health information (PHI) shall be disclosed to the individual pursuant to Chapter 11 of DoD 6025.18–R, DoD Health Information Privacy Regulation (Available at *http://www.dtic.mil/whs/directives/corres/pdf/602518r.pdf*) and 32 CFR part 310, subpart D.

(2) The individual may be charged reproduction fees for copies or records as outlined in 32 CFR part 310, subpart D.

(f) *Amending and Disputing Personal Information in Systems of Records.*

(1) The System Manager shall allow individuals to request amendments to the records covered by their system notice to the extent that such records are not accurate, relevant, timely, or complete. Amendments are limited to correcting factual matters and not matters of official judgment, such as performance ratings, promotion potential, and job performance appraisals.

(2) Individuals seeking amendment to records that pertain to themselves, and that are filed or retrieved by their name or other personal identifier, may submit a request for amendment in person, by mail, or by email. All requests for amendment must be in accordance with the following:

(i) Any individual making a request for amendment to records in person shall show personal identification to the appropriate System Manager, as identified in the SORN published in the FR, to verify his or her identity, as outlined in 32 CFR part 310, subpart D.

(ii) Any individual making a request for amendment to records by mail or email shall address such request to the System Manager. If the System Manager is unknown, they may inquire to NGB–JA/OIP: AHS-Bldg 2, Suite T319B, 111 S. George Mason Drive, Arlington VA 22204–1382, or email *privacy@ng.army.mil* for assistance in locating the System Manager.

(iii) Requests for amendment shall include a mailing address where the decision on the request for amendment can be sent and include either a signed notarized statement or a signed unsworn declaration to verify his or her identity to ensure that they are seeking to amend records about themselves and not, inadvertently or intentionally, the records of others. The Privacy Act (5 U.S.C. 552a) provides a penalty of a misdemeanor and a fine of not more than $5,000 for any person who knowingly and willfully requests or obtains any record concerning an individual from an agency under false pretenses. The declaration shall read as follows:

(A) Inside the US: ''I declare (or certify, verify, or state) under penalty of perjury that the foregoing is true and correct. Executed on (date). (Signature).''

(B) Outside the US: ''I declare (or certify, verify, or state) under penalty of perjury under the laws of the United States of America that the foregoing is true and correct. Executed on (date). (Signature).''

(iv) All requests for amendment must include all information necessary to make a determination on the request for amendment, as outlined in 32 CFR part 310, subpart D.

(v) Requestors affiliated with the DoD may not use official government supplies or equipment to include mailing addresses, work phones/faxes, or DoD-issued email accounts to make requests for amendment. If requests are received using DoD equipment, the requestor will be advised to make a new request, using non-DoD equipment, and processing of their request will begin only after such new request is received.

(3) When a request for amendment is received, the System Manager shall:

(i) Mail a written acknowledgement of the request for amendment to the individual within 10 working days of receipt. Such acknowledgement shall identify the request and may, if necessary, request any additional information needed to make a determination, advising the requestor that they have 20 calendar days to reply. No acknowledgement is necessary if the request can be reviewed and processed, to include notification to the individual of a grant or denial of amendment within the 10 working day period. Whenever practical, the decision to amend shall be made within 30 working days. For requests presented in person, written acknowledgement may be provided at the time the request is presented.

(ii) Determine whether the requester has adequately supported his or her claim that the record is inaccurate, irrelevant, untimely, or incomplete.

(A) If it is determined the individual's request for amendment is being granted, the System Manager will proceed to amend the records in accordance with existing statutes, regulations, or administrative procedures. The requestor will then be notified in writing of the agreement to amend and all previous holders of the records will be notified of the amendment as required by 32 CFR part 310, subpart D.

(B) If it is determined that any, or all, of the record should not be amended, the original request, along with the record requested for amendment, and justification for recommended denial

action shall be forwarded through their Director to the Chief of the OIP within 10 working days of receipt for a decision by the IDA.

(C) If the request for an amendment pertains to a record controlled and maintained by another Federal agency, the amendment request shall be referred to the appropriate agency and the requestor will be notified in writing of the referral and contact information for the agency.

(4) The Chief of the OIP will use the following procedures for any recommended denials of amendment:

(i) The specific reason for denial of amendment cited by the System Manager shall be evaluated and a recommendation presented to the IDA on whether to support the recommendation to deny amendment to the record.

(ii) If the request to amend the record is denied, a written letter will be sent to the requestor using procedures outlined in 32 CFR part 310, subpart D. If an individual disagrees with the denial decision, he or she may file an appeal within 60 calendar days of receipt of the denial notification. Appeals should be sent to: NGB Chief Counsel, 1636 Defense Pentagon, Room 1D164, Washington DC 20301–1636.

(5) The Chief Counsel will use the following procedures for any appeals received:

(i) The Chief Counsel will notify Chief of the OIP that an appeal has been received and request an exact copy of the administrative record be provided within 10 working days.

(ii) The Chief Counsel will review the appeal and make a final determination on whether to grant or deny the appeal.

(A) If the Chief Counsel denies the appeal, a written letter will be provided to the requestor using the procedures outlined in 32 CFR part 310, subpart D including notification to the requestor that they may file a statement of disagreement. A brief statement will be prepared by the NGB Chief Counsel summarizing the reasons for refusing to amend the records and a copy will be provided to the Chief of the OIP and the System Manager.

(B) If the appellate authority grants the appeal, the procedures outlined in 32 CFR part 310, subpart D and this part will be followed. The System Manager will be responsible for informing all previous recipients of the amendment when a disclosure accounting has been maintained in accordance with 32 CFR part 310, subpart E.

(iii) All appeals should be processed within 30 working days after receipt by the Chief Counsel. If the Chief Counsel determines that a fair and equitable review cannot be made within that time, the individual shall be informed in writing of the reasons for the delay and of the approximate date the review is expected to be completed.

(g) *Disclosure of Disputed Information.* If the appellate authority determines the record should not be amended and the individual has filed a statement of disagreement, the following procedures will be used:

(1) The System Manager that has control of the record shall annotate the disputed record so it is apparent to any person to whom the record is disclosed that a statement has been filed. Where feasible, the notation itself shall be integral to the record.

(2) Where disclosure accounting has been made, the System Manager shall advise previous recipients that the record has been disputed and shall provide a copy of the individual's statement of disagreement, and the statement summarizing the reasons for the NGB refusing to amend the records in accordance with 32 CFR part 310, subpart D.

(3) The statement of disagreement shall be maintained in a manner that permits ready retrieval whenever the disputed portion of the record is disclosed.

(4) When information that is the subject of a statement of disagreement is subsequently requested for disclosure, the System Manager will follow these procedures:

(i) The System Manager shall note which information is disputed and provide a copy of the individual's statement in the disclosure.

(ii) The System Manager shall include the summary of the NGB's reasons for not making a correction when disclosing disputed information.

(5) Copies of the statement summarizing the reasons for the NGB refusing to amend the records will be treated as part of the individual's record; however, it will not be subject to the amendment procedure outlined in 5 U.S.C. 552 and 32 CFR part 310, subpart D.

(h) *Penalties.*

(1) Civil Action. An individual may file a civil suit against the NGB or its employees if the individual feels certain provisions of 5 U.S.C. 552a have been violated.

(2) Criminal Action.

(i) Criminal penalties may be imposed against any officer or employee for the offenses listed in subsection I of 5 U.S.C. 552a.

(ii) An officer or employee of NGB may be found guilty of a misdemeanor and fined up to $5,000 for a violation of the offenses listed in subsection I of 5 U.S.C. 552a.

(i) *Litigation Status Sheet.* Whenever a complaint citing 5 U.S.C. 552a is filed in a U.S. District Court against the NGB, or any employee of NGB, the Chief of Litigation and Employment Law shall:

(1) Promptly notify the Chief of the OIP of the complaint using the litigation status sheet in 32 CFR part 310, Appendix H. This status sheet will be provided to the DPCLO, or the respective service(s) involved in the litigation.

(2) Provide a revised litigation status sheet to the Chief of the OIP at each stage of the litigation for submission to the DPCLO, or the respective service(s) involved.

(3) When a court renders a formal opinion or judgment, copies of the judgment or opinion shall be provided to the Chief of the OIP who will provide them to DPCLO, or the respective service(s) involved, along with the litigation status sheet reporting the judgment or opinion.

(j) *Computer Matching Programs.* All requests for participation in a matching program (either as a matching agency, or a source agency) shall be submitted directly to the DPCLO for review and compliance, following procedures in 32 CFR part 310, subpart L. The Directorate shall submit a courtesy copy of such requests to the Chief of the OIP.

§ 329.7 Exemptions.

(a) *General Information.* There are two types of exemptions, general and specific. The general exemption authorizes the exemption of a SOR from all but a few requirements of 5 U.S.C. 552a. The specific exemption authorizes exemption of a SOR or portion thereof, from only a few specific requirements. If a new SOR originates for which an exemption is proposed, or an additional or new exemption for an existing SOR is proposed, the exemption shall be submitted with the SORN. No exemption of a SOR shall be considered automatic for all records in the system. The System Manager shall review each requested records and apply the exemptions only when this will serve significant and legitimate purpose of the Federal Government.

(b) *Exemption for Classified Material.* All SOR maintained by the NGB shall be exempt under section (k)(1) of 5 U.S.C. 552a to the extent that the systems contain any information properly classified under Executive Order 13526 and that is required by that Executive Order to be kept secret in the interest of national defense or foreign policy. This exemption is applicable to parts of all systems of records including those not

otherwise specifically designated for exemptions herein which contain isolated items of properly classified information.

(c) *Exemption for Anticipation of a Civil Action or Proceeding.* All systems of records maintained by the NGB shall be exempt under section (d)(5) of 5 U.S.C. 552a, to the extent that the record is compiled in reasonable anticipation of a civil action or proceeding.

(d) *General Exemptions.* No SOR within the NGB shall be considered exempt under subsection (j) or (k) of 5 U.S.C. 552a until the exemption rule for the SOR has been published as a final rule in the FR.

(e) *Specific exemptions.*

(1) System identifier and name: INGB 001, Freedom of Information Act (5 U.S.C.) and Privacy Act (5 U.S.C. 552a) Case Files.

(i) Exemption: During the course of a 5 U.S.C. 552 or 5 U.S.C. 552a action, exempt materials from other systems of records may, in turn, become part of the case records in this system. To the extent that copies of exempt records from those other systems of records are entered into this 5 U.S.C. 552 or 5 U.S.C. 552a case record, the NGB hereby claims the same exemptions for the records from those other systems that are entered into this system, as claimed for the original primary SOR which they are a part.

(ii) Authority: 5 U.S.C. 552a, sections (j)(2), (k)(1), (k)(2), (k)(3), (k)(4), (k)(5), (k)(6), and (k)(7).

(iii) Reasons: Records are only exempt from pertinent provisions of 5 U.S.C. 552a to the extent such provisions have been identified and an exemption claimed for the original record and the purposes underlying the exemption for the original record still pertain to the record which is now contained in this SOR. In general, the exemptions were claimed in order to protect properly classified information relating to national defense and foreign policy, to avoid interference during the conduct of criminal, civil, or administrative actions or investigations, to ensure protective services provided the President and others are not compromised, to protect the identity of confidential sources incident to Federal employment, military service, contract, and security clearance determinations, to preserve the confidentiality and integrity of Federal testing materials, and to safeguard evaluation materials used for military promotions when furnished by a confidential source. The exemption rule for the original records will identify the specific reasons why the records are exempt from specific provisions of 5 U.S.C. 552a.

(2) System identifier and name: INGB 005, Special Investigation Reports and Files.

(i) Exemption: Investigatory material compiled for law enforcement purposes, other than material within the scope of subsection 5 U.S.C. 552a(j)(2), may be exempt pursuant to 5 U.S.C. 552a(k)(2). However, if an individual is denied any right, privilege, or benefit for which he would otherwise be entitled by Federal law or for which he would otherwise be eligible, as a result of the maintenance of the information, the individual will be provided access to the information except to the extent that disclosure would reveal the identity of a confidential source. Note: When claimed, this exemption allows limited protection of investigative reports maintained in a SOR used in personnel or administrative actions. Any portion of this SOR which falls within the provisions of 5 U.S.C. 552a(k)(2) may be exempt from the following subsections of 5 U.S.C. 552a(c)(3), (d), (e)(1), (e)(4)(G), (H), and (I), and (f).

(ii) Authority: 5 U.S.C. 552a, section (k)(2).

(iii) Reasons:

(A) From subsection (c)(3) because to grant access to the accounting for each disclosure as required by 5 U.S.C. 552a, including the date, nature, and purpose of each disclosure and the identity of the recipient, could alert the subject to the existence of the investigation. This could seriously compromise case preparation by prematurely revealing its existence and nature; compromise or interfere with witnesses or make witnesses reluctant to cooperate; and lead to suppression, alteration, or destruction of evidence.

(B) From subsections (d) and (f) because providing access to investigative records and the right to contest the contents of those records and force changes to be made to the information contained therein would seriously interfere with and thwart the orderly and unbiased conduct of the investigation and impede case preparation. Providing access rights normally afforded under 5 U.S.C. 552a would provide the subject with valuable information that would allow interference with or compromise of witnesses or render witnesses reluctant to cooperate; lead to suppression, alteration, or destruction of evidence; enable individuals to conceal their wrongdoing or mislead the course of the investigation; and result in the secreting of or other disposition of assets that would make them difficult or impossible to reach in order to satisfy any Government claim growing out of the investigation or proceeding.

(C) From subsection (e)(1) because it is not always possible to detect the relevance or necessity of each piece of information in the early stages of an investigation. In some cases, it is only after the information is evaluated in light of other evidence that its relevance and necessity will be clear.

(D) From subsections (e)(4)(G) and (H) because this SOR is compiled for investigative purposes and is exempt from the access provisions of subsections (d) and (f).

(E) From subsection (e)(4)(I) because to the extent that this provision is construed to require more detailed disclosure than the broad, generic information currently published in the system notice, an exemption from this provision is necessary to protect the confidentiality of sources of information and to protect privacy and physical safety of witnesses and informants.

Dated: April 15, 2013.

Patricia Toppings,

OSD Federal Register Liaison Officer, Department of Defense.

[FR Doc. 2013–09619 Filed 4–23–13; 8:45 am]

BILLING CODE 5001–06–P

POSTAL SERVICE

39 CFR Part 111

New Mailing Standards for Live Animals and Special Handling

AGENCY: Postal Service™.

ACTION: Proposed rule.

SUMMARY: The Postal Service is proposing to revise *Mailing Standards of the United States Postal Service,* Domestic Mail Manual (DMM®) 503.14 and 601.9.3 to require special handling service for shipments containing certain types of live animals, to limit the mail classes available for use when shipping certain types of live animals, and to expand the mailability of live animals domestically to include any adult bird weighing no more than 25 pounds.

DATES: Submit comments on or before May 24, 2013.

ADDRESSES: Mail or deliver written comments to the manager, Product Classification, U.S. Postal Service, 475 L'Enfant Plaza SW., Room 4446, Washington, DC 20260–5015. You may inspect and photocopy all written comments at USPS® Headquarters Library, 475 L'Enfant Plaza SW., 11th Floor North, Washington, DC, by appointment only between the hours of 9 a.m. and 4 p.m., Monday through Friday. Call 1–202–268–2906 in advance for an appointment. Email

comments, containing the name and address of the commenter, may be sent to: *ProductClassification@usps.gov,* with a subject line of ''Live Animals.'' Faxed comments are not accepted.

FOR FURTHER INFORMATION CONTACT: Grace Letto at 202–268–8370 or Rachel Devadas at 202–268–7276.

SUPPLEMENTARY INFORMATION: The Postal Service currently requires special handling service for designated shipments of live animals needing additional care during transport and handling to its destination as follows: Domestic shipments containing honeybees or baby poultry are currently required to include special handling service, unless First-Class Mail®, First-Class Package Service™, or Priority Mail® is used. Shipments containing live animals must also be marked on the address side with a description of the contents, even if special handling service is not purchased. These markings provide notice to Postal Service employees that specific care, different from the handling of ordinary mailpieces, is required. Circumstances requiring the Postal Service to handle shipments containing live animals differently also include:

a. Protection of Postal Service employees and the public against harm from diseased animals.

b. Protection of the mail and the environment against damage to the shipping container or the live animal and offensive odors or noise.

c. Protection of animals against death, taking into account the expected time and temperature in transit (weather conditions), and packaging sufficient to resist impact, heat and cold, and to prevent suffocation.

The Postal Service consistently accepts, transports, and delivers live animals with additional care in handling, regardless of the mail class or the extra service being purchased. This additional care ensures safe and effective processing for mail containing live animals through the mailstream to its destination. Consequently, the Postal Service incurs additional expense to isolate and protect live shipments even when sent by air transportation, such as with Express Mail® or Priority Mail®.

If this proposal is adopted the Postal Service will require special handling service for all parcels containing bulk shipments of bees (e.g. a queen bee packaged with an attending swarm), day-old poultry and adult birds, regardless of the class of mail used.

Additionally, the Postal Service currently affixes a unique tracking barcode on all parcels presented at retail, and recommends that all mailers not presenting shipments at retail include an Intelligent Mail® package barcode (IMpb) on their mailpieces, when not already required to do so as a condition of the mail class and price category or postage payment method used. If this proposal is adopted, the Postal Service will require mailers purchasing special handing to either present their mailpieces at retail, or to include an IMpb, embedded with the appropriate service type code applicable to special handling and the mail class used, on their mailpieces. The Postal Service also proposes that shipments of live animals that include special handling must be accepted at either a USPS retail unit, Business Mail Entry Unit (BMEU) or a Detached Mail Unit (DMU). The Postal Service anticipates that the combination of IMpb tracking and special handling service will provide customers with the service they expect as their parcels containing live animals are transported to their respective destinations.

To assure prompt or expedited delivery and to minimize the chances of animals dying in transit, the Postal Service is also proposing to require shipments containing amphibians and reptiles to be limited to the following products: Express Mail, Priority Mail (excluding Critical Mail®), First-Class Mail (parcels only) or First-Class Package Service. If this proposal is adopted, shipments of live amphibians and reptiles would no longer be permitted for use with any Package Services, Standard Post™, or Parcel Select® products.

Currently, certain disease-free adult birds can be accepted for domestic shipment when mailed in compliance with applicable regulations. Mailability is currently restricted to adult chickens, turkeys, guinea fowl, doves, pigeons, pheasants, partridges, quail ducks, geese, and swans. The Postal Service is proposing to expand its mailing standards to allow for the shipment of any disease-free live bird, weighing no more than 25 pounds, which can be legally transported. If this proposal is adopted, mailers must be compliant with all applicable governmental laws and regulations, including the Lacey Act, the Endangered Species Act (ESA), and regulations of the U.S. Department of Agriculture, U.S. Fish and Wildlife Service, and any state, municipal or local ordinances. Mailings must also be compliant with the guidelines provided in USPS Publication 14, *Prohibitions and Restrictions on Mailing Animals, Plants, and Related Matter,* Chapter 5.

Although we are exempt from the notice and comment requirements of the Administrative Procedure Act (5 U.S.C. 553 (b), (c)) regarding proposed rulemaking by 39 U.S.C. 410(a), we invite public comments on the following proposed revisions to *Mailing Standards of the United States Postal Service,* Domestic Mail Manual (DMM), incorporated by reference in the *Code of Federal Regulations.* See 39 CFR 111.1.

List of Subjects in 39 CFR Part 111

Administrative practice and procedure, Postal Service.

Accordingly, 39 CFR part 111 is proposed to be amended as follows:

PART 111 — [AMENDED]

■ 1. The authority citation for 39 CFR part 111 continues to read as follows:

Authority: 5 U.S.C. 552(a); 13 U.S.C. 301–307; 18 U.S.C. 1692–1737; 39 U.S.C. 101, 401, 403, 404, 414, 416, 3001–3011, 3201–3219, 3403–3406, 3621, 3622, 3626, 3632, 3633, and 5001.

■ 2. Revise the following sections of *Mailing Standards of the United States Postal Service,* Domestic Mail Manual (DMM), as follows:

Mailing Standards of the United States Postal Service, Domestic Mail Manual (DMM)

* * * * *

500 Additional Mailing Services

* * * * *

503 Extra Services

* * * * *

14.0 Special Handling

14.1 Fees for Special Handling

* * * * *

14.1.2 Fee and Postage

[Revise the first sentence of 14.1.2 as follows:]

The applicable special handling fee must be paid in addition to postage for each addressed piece for which special handling service is required by standards, or is requested. * * *

14.2 Basic Information

14.2.1 Description

[Revise the 14.2.1 by adding a new fourth and fifth sentence as follows:]

* * * Items with special handling service receive tracking and when not presented at retail must include an Intelligent Mail package barcode prepared in accordance with 708.5. Any mailpieces containing live animals and including special handling must be presented at retail postal unit, a Business Mail Entry Unit (BMEU), or a Detached Mail Unit (DMU).

14.2.2 Eligible Matter

[Revise 14.2.2 as follows:]

Special handling service is available only for Express Mail, Priority Mail (excluding Critical Mail), First-Class Mail, First-Class Package Service, Standard Post, Package Services, and Parcel Select (except Parcel Select Lightweight) pieces.

* * * * *

[Revise title of 14.2.4 and text as follows:]

14.2.4 Bees, Day-Old Poultry and Adult Birds

Special handling is required for shipments containing day-old poultry, adult birds and bulk shipments of bees (e.g. a queen bee packaged with an attending swarm), regardless of the class of mail purchased.

* * * * *

[Delete item 14.2.6 in its entirety]

* * * * *

600 Basic Standards for All Mailing Services

601 Mailability

* * * * *

9.0 Perishables

* * * * *

9.3 Live Animals

* * * * *

[Revise the second sentence of 9.3.2 as follows.]

9.3.2 Day-Old Poultry

* * * Live day-old chickens, ducks, emus, geese, guinea fowl, partridges, pheasants (pheasants may be mailed only from April through August), quail, and turkeys are acceptable in the mail only if:

* * * * *

[Revise the text of item f as follows:]

f. The shipment bears special handling postage in addition to regular postage.

* * * * *

[Revise and reformat 9.3.3 to include a new last sentence, and a new item a and b as follows:]

9.3.3 Small Cold-Blooded Animals

* * * The following also apply:

a. Reptiles (*e.g.* lizards, skinks, and baby alligators and caimans not more than 20 inches long) must be mailed by Express Mail, Priority Mail (excluding Critical Mail), First-Class Mail (parcels only), or First-Class Package Services.

b. Amphibians (*e.g.* toads, frogs, and salamanders) must be mailed by Express Mail, Priority Mail (excluding Critical Mail), First-Class Mail (parcels only), or First-Class Mail Package Services.

[Revise title and introductory text of 9.3.4 as follows:]

9.3.4 Adult Birds

Disease-free adult birds, weighing no more than 25 pounds, may be mailed domestically. Mailers must be compliant with all applicable governmental laws and regulations, including the Lacey Act, the Endangered Species Act (ESA), and regulations of the U.S. Department of Agriculture, U.S. Fish and Wildlife Service, and any state, municipal or local ordinances. Mailings must also be compliant with the guidelines provided in USPS Publication 14, *Prohibitions and Restrictions on Mailing Animals, Plants, and Related Matter,* Chapter 5. In addition, each container or package must be marked as required by U.S. Fish and Wildlife Service under 50 CFR 14. Adult birds are mailable as follows:

[Revise 9.3.4a as follows:]

a. The mailer must send adult fowl by Express Mail, including Special Handling service, in secure containers approved by the manager, Product Classification (see 608.8.0 for address).

* * * * *

9.3.7 Bees

[Revise the second sentence of 9.3.7 as follows:]

* * * Bulk shipments of bees (e.g. a queen bee packaged with an attending swarm) must include postage for special handling service. * * *

* * * * *

We will publish an appropriate amendment to 39 CFR part 111 to reflect these changes if our proposal is adopted.

Stanley F. Mires,

Attorney, Legal Policy & Legislative Advice.

[FR Doc. 2013–09603 Filed 4–23–13; 8:45 am]

BILLING CODE P

ENVIRONMENTAL PROTECTION AGENCY

40 CFR Part 300

[EPA–HQ–SFUND–2005–0011; FRL–9805–7]

National Oil and Hazardous Substances Pollution Contingency Plan; National Priorities List: Deletion of the Koppers Co., Inc. (Florence Plant) Superfund Site

AGENCY: Environmental Protection Agency.

ACTION: Proposed rule; notice of intent.

SUMMARY: The Environmental Protection Agency (EPA) Region 4 is issuing a Notice of Intent to Delete the Koppers Co., Inc. (Florence Plant) Superfund Site (Site) located in Florence, South Carolina, from the National Priorities List (NPL) and requests public comments on this proposed action. The NPL, promulgated pursuant to section 105 of the Comprehensive Environmental Response, Compensation, and Liability Act (CERCLA) of 1980, as amended, is an appendix of the National Oil and Hazardous Substances Pollution Contingency Plan (NCP). The EPA and the South Carolina Department of Health and Environmental Control (SCDHEC) have determined that no further response activities under CERCLA are appropriate. However, this deletion does not preclude future actions under Superfund.

DATES: Comments must be received by May 24, 2013.

ADDRESSES: Submit your comments, identified by Docket ID no. EPA–HQ–SFUND–2005–0011, by one of the following methods:

- *http://www.regulations.gov.* Follow on-line instructions for submitting comments.
- *Email: jones.yvonneo@epa.gov.*
- *Fax:* 404–562–8788 Attention: Yvonne Jones.
- *Mail:* Yvonne Jones, Remedial Project Manager, Superfund Remedial Section, Superfund Remedial Branch, Superfund Division, U.S. Environmental Protection Agency, Region 4, 61 Forsyth Street SW., Atlanta, Georgia 30303–8960.
- *Hand delivery:* U.S. Environmental Protection Agency, Region 4, 61 Forsyth Street SW., Atlanta, Georgia 30303–8960. Such deliveries are only accepted during the Docket's normal hours of operation, and special arrangements should be made for deliveries of boxed information. The Regional EPA Office is open for business Monday through Friday, 8:30 a.m. to 4:00 p.m., excluding Federal Holidays.

Instructions: Direct your comments to Docket ID no. EPA–HQ–SFUND–2005–0011. EPA's policy is that all comments received will be included in the public docket without change and may be made available online at *http://www.regulations.gov,* including any personal information provided, unless the comment includes information claimed to be Confidential Business Information (CBI) or other information whose disclosure is restricted by statute. Do not submit information that you consider to be CBI or otherwise protected through *http://www.regulations.gov* or email. The *http://www.regulations.gov* Web site is an ''anonymous access'' system, which

means EPA will not know your identity or contact information unless you provide it in the body of your comment. If you send an email comment directly to EPA without going through *http://www.regulations.gov,* your email address will be automatically captured and included as part of the comment that is placed in the public docket and made available on the Internet. If you submit an electronic comment, EPA recommends that you include your name and other contact information in the body of your comment and with any disk or CD–ROM you submit. If EPA cannot read your comment due to technical difficulties and cannot contact you for clarification, EPA may not be able to consider your comment. Electronic files should avoid the use of special characters, any form of encryption, and be free of any defects or viruses.

Docket

All documents in the docket are listed in the *http://www.regulations.gov* index. Although listed in the index, some information is not publicly available, e.g., CBI or other information where disclosure is restricted by statute. Certain other material, such as copyrighted material, will be publicly available only in the hard copy. Publicly available docket materials are available either electronically in *http://www.regulations.gov* or in hard copy at:

Regional Site Information Repository: U.S. EPA Record Center, Attn: Ms. Anita Davis, Atlanta Federal Center, 61 Forsyth Street SW., Atlanta, Georgia 30303–8960. Hours of Operation (by appointment only): 8:30 a.m. to 4:00 p.m., Monday through Friday.

Local Site Information Repository: Florence County Library, 509 S. Dargan Street, Florence, SC 29506. Hours of Operation: 9:00 a.m.–8:30 p.m., Monday through Thursday. 9:00 a.m.–5:30 p.m., Friday through Saturday. 2:00 p.m.–6:00 p.m., Sunday.

FOR FURTHER INFORMATION CONTACT:

Yvonne Jones, Remedial Project Manager, Superfund Remedial Section, Superfund Remedial Branch, Superfund Division, U.S. Environmental Protection Agency, Region 4, 61 Forsyth Street SW., Atlanta, Georgia 30303–8960, (404) 562–8793, Electronic mail at: *jones.yvonneo@epa.gov.*

SUPPLEMENTARY INFORMATION:

Table of Contents

I. Introduction
II. NPL Deletion Criteria
III. Deletion Procedures
IV. Basis for Intended Site Deletion

I. Introduction

EPA Region 4 announces its intent to delete the Koppers Co., Inc. (Florence Plant) Superfund Site (Site) from the National Priorities List (NPL) and requests public comment on this proposed action. The NPL constitutes Appendix B of 40 CFR part 300 which is the National Oil and Hazardous Substances Pollution Contingency Plan (NCP), which EPA promulgated pursuant to section 105 of the Comprehensive Environmental Response, Compensation and Liability Act (CERCLA) of 1980, as amended. As a general matter, deletion of the Koppers Co., Inc. (Florence Plant) Superfund Site from the NPL will clarify that the South Carolina Department of Health and Environmental Control (SCDHEC), Bureau of Land and Waste Management Resource Conservation and Recovery Act (''RCRA'') Program will have primary responsibility for ensuring that the hazardous wastes released at the Site are appropriately remediated. Notwithstanding any such deletion of this Site from the NPL, in the event that conditions at this Site warrant additional remedial corrective action, this Site remains eligible for Fund-financed remedial action. Pursuant to section 300.425(e)(3) of the NCP, 40 CFR 300.425(e)(3): ''All releases deleted from the NPL are eligible for further Fund-financed remedial actions should future conditions warrant such action. Whenever there is a significant release from a site deleted from the NPL, the site shall be restored to the NPL without application of the [Hazard Ranking System].'' Therefore, deletion of this, or any other, site from the NPL does not preclude eligibility for subsequent Fund-financed remedial action if future conditions warrant such action.

EPA will accept comments on the proposal to delete this site for thirty (30) days after publication of this document in the **Federal Register**.

Section II of this document explains the criteria for deleting sites from the NPL. Section III discusses procedures that EPA is using for this action. Section IV discusses the Koppers Co., Inc. (Florence Plant) Superfund Site and demonstrates how it meets the deletion criteria.

II. NPL Deletion Criteria

The NCP establishes the criteria that EPA uses to delete sites from the NPL. In accordance with 40 CFR 300.425(e), sites may be deleted from the NPL where no further response is appropriate. In making such a determination pursuant to 40 CFR 300.425(e), EPA will consider, in consultation with the State, whether any of the following criteria have been met:

i. responsible parties or other persons have implemented all appropriate response actions required;

ii. all appropriate Fund-financed response under CERCLA has been implemented, and no further response action by responsible parties is appropriate; or

iii. the remedial investigation has shown that the release poses no significant threat to public health or the environment and, therefore, the taking of remedial measures is not appropriate.

Consistent with Section 300.425(e) of the NCP, 40 CFR 300.425(e), EPA proposes deletion of the Koppers Co., Inc. (Florence Plant) Site because, as explained further below, no further CERCLA response is appropriate. This determination is based on a policy that EPA has adopted for implementation of the NPL deletion criteria. This policy, entitled ''The National Priorities List for Uncontrolled Hazardous Waste Sites; Deletion Policy for Resource Conservation and Recovery Act Facilities,'' was published in the **Federal Register** on March 20, 1995 (60 FR 14641). This policy sets forth the following criteria and their general application for deleting RCRA facilities from the NPL:

1. If evaluated under EPA's current RCRA/NPL deferral policy (which refers to the policy in effect at the time the deletion decision is made. As past **Federal Register** notices demonstrate, the RCRA/NCP deferral policy has changed, and may continue to change based upon the Agency's continued evaluation of how best to implement the statutory authority of RCRA and CERCLA), the site would be eligible for deferral from listing on the NPL;

2. The CERCLA site is currently being addressed by RCRA corrective action authorities under an existing enforceable order, or permit, containing corrective action provisions;

3. Response under RCRA is progressing adequately; and

4. Deletion would not disrupt an ongoing CERCLA action.

III. Deletion Procedures

The following procedures apply to deletion of the Site:

(1) EPA consulted with the State of South Carolina before developing this Notice of Intent to Delete.

(2) The State of South Carolina, through SCDHEC, has concurred with deletion of the Site from the NPL.

(3) Concurrently with the publication of this Notice of Intent to Delete in the **Federal Register**, a notice is being published in a major local newspaper,

Florence Morning News. The newspaper notice announces the 30-day public comment period concerning the Notice of Intent to Delete the site from the NPL.

(4) The EPA placed copies of documents supporting the proposed deletion in the deletion docket and made these items available for public inspection and copying at the Site information repositories identified above.

If adverse comments are received within the 30-day public comment period on this document, EPA will evaluate and respond appropriately to the comments before making a final decision to delete. If necessary, EPA will prepare a Responsiveness Summary to address any significant public comments received. After the public comment period, if EPA determines it is still appropriate to delete the Site, the Regional Administrator will publish a final Notice of Deletion in the **Federal Register**. Public notices, public submissions and copies of the Responsiveness Summary, if prepared, will be made available to interested parties, and will be placed in the site information repositories listed above.

Deletion of a site from the NPL does not itself create, alter, or revoke any individual's rights or obligations. Deletion of a site from the NPL does not in any way alter EPA's right to take enforcement actions, as appropriate. The NPL is designed primarily for informational purposes and to assist EPA management. Section 300.425(e)(3) of the NCP states that the deletion of a site from the NPL does not preclude eligibility for future response actions, should future conditions warrant such actions.

IV. Basis for Site Deletion

The following information provides EPA's rationale for deleting the Site from the NPL.

A. Site Background

The Koppers Co., Inc. (Florence Plant) Superfund Site (Facility) (EPA CERCLIS Identification Number SCD003353026) is situated within an approximate 200-acre tract located along North Koppers Street in Florence, Florence County, South Carolina. The Facility is within an area that is currently zoned industrial. The surrounding property is used for a mixture of industrial, commercial, residential, and transportation purposes. Private residential development borders the northwest portion of the Facility. CSX Transportation owns and operates a rail yard immediately south of the Facility. Areas to the north, west, and east are relatively undeveloped. The Florence City-County Airport is located south of the Facility across U.S. Highway 76/301.

Constructed by the American Lumber and Treating Company, the Facility has been in operation since 1946. Koppers Company, Inc. (KCI) acquired the property in 1954. On December 29, 1988, KCI sold certain of its business assets, including the Koppers Facility in Florence, as well as the right to use the ''Koppers'' trade name, to Koppers Industries, Inc., (now known as Koppers Inc. [KI]). Shortly thereafter, in January 1989, KCI changed its name to ''Beazer Materials and Services, Inc.,'' and then again changed its name, in April 1990, to ''Beazer East, Inc.'' (Beazer), its current name. KI currently owns the Florence Wood Treating Facility. The Facility produces treated wood products, including telephone poles, railroad ties, and fencing materials for the utilities, railroad, and construction industries. The primary wood preserving processes at the Facility are pressure treatment with creosote, pressure treatment with pentachlorophenol (PCP), and treatment with chromated-copper arsenate. A fire retardant was previously (prior to 1988) used at the Facility. While the Facility is currently owned and operated by KI, Beazer retains responsibility for addressing certain environmental conditions caused by site activities occurring before December 1988.

Past practices at the Facility led to contamination of the soil, sediment and groundwater. From the beginning of plant operations until 1979, creosote and PCP wastes at the Facility were stored in lagoons located in the southwest corner of the Facility. In 1979, the use of these lagoons was discontinued and the waste was land-farmed using a process called spray irrigation. Prior to closure of the impoundments and the spray irrigation field, wastewater flowed to three RCRA surface impoundments. In 1980, a local resident notified SCDHEC that water from his well had a creosote odor and a foul taste. Other residents of the same area indicated similar taste and odor problems with their well water. SCDHEC officials tested the well water in this area and determined that it contained a significant level of creosote. In response to the findings at the Facility, in October 1981, SCDHEC issued Consent Order 81–56–W requiring KCI (now known as Beazer) to proceed with studies to investigate groundwater conditions. Following additional negotiations with SCDHEC, KCI (now known as Beazer) provided public water to a neighborhood directly downgradient of the Facility by funding water main extensions to the City of Florence water supply system.

From 1981 to the present, various investigations have been performed at the Facility. Contaminants identified as being of concern included PCP and other chlorinated phenols, polycyclic aromatic hydrocarbons, copper, chromium, arsenic, and varied constituents of creosote. As an interim measure, KCI constructed a groundwater containment and recovery system at the Facility in August 1983. Due to the presence of groundwater contamination, EPA also proposed the Site on the NPL on September 8, 1983 (48 FR 40674) and finalized the Site on the NPL on September 21, 1984 (49 FR 37070).

Facility-wide investigations began in 1986, with EPA conducting the RCRA Facility Assessment (RFA). The RFA identified thirty-three solid waste management units (SWMUs) located throughout the Facility. To simplify the response efforts, EPA, SCDHEC, and KCI (now known as Beazer) agreed to implement a Facility-wide approach to address historical releases from all former Facility sources and the thirty-three SWMUs. To further address the Site, in February 3, 1988, EPA issued a RCRA 3008(h) Consent Order (Docket Number 88–03–R) (RCRA CO) requiring KCI (now known as Beazer) to perform a RCRA Facility Investigation, Health and Ecological Risk Assessment and a Corrective Measures Study (RFI/HERA/CMS) at the Facility.

Concurrent with the RFI/HERA/CMS, in September 1995, SCDHEC issued the Post-Closure Care Hazardous Waste Permit (Permit Number SCD 003 353 026) requiring KI and Beazer to conduct long-term monitoring and maintenance activities necessary to protect the surrounding environment and population from releases of hazardous constituents. The 1995 Post-Closure Care Hazardous Waste Permit incorporates the RCRA CO .

Pursuant to the RCRA CO and the 1995 Post-Closure Care Hazardous Waste Permit, the CMS was finalized in August 2006. The findings of the RFI/HERA/CMS identified potential risks from several areas at the Facility and required corrective measures for the following media to address those risks:

On-site Facility Soils: Consists of potentially impacted surface and subsurface soils within the property boundary of the Facility known as the Inactive Non-Process Area (INPA). The INPA is located in a wooded area immediately west of the active portion of the Facility approximately 100 feet upstream of Outfall 001.

Off-site Facility Soils: Consists of potentially impacted surface soil within

the drainage ditch downgradient of Outfall 001. The Outfall 001 channel area is located adjacent to the southwest corner of the Facility on property owned by the CSX Corporation.

Off-site Facility Sediment: Consists of potentially impacted stream sediments in Two-Mile Creek, downgradient, and near the stormwater detention pond. Two Mile Creek is located approximately 400 feet east of the Site entrance.

Groundwater: Consists of on-site Facility and off-site Facility potentially impacted groundwater present within the upper unconfined water-bearing zone.

Taking into consideration regulatory requirements and the results of the HERA, the following Corrective Action Objectives (CAOs) were developed:

On-Site CAOs

- Soils—Mitigate unacceptable exposures to Site-related constituents in soils for potential on-site Facility receptors.
- Groundwater—Mitigate potential future exposure to Site-related groundwater constituents that exceed the safe drinking water standards or acceptable risk levels.
- Manage dense non-aqueous phase liquid (DNAPL) in accordance with EPA guidance on NAPLs.

Off-Site CAOs

- Surface Soils/Sediments—Mitigate unacceptable exposures to Site-related constituents in surface soils and sediments for potential off-site Facility receptors.
- Groundwater—Mitigate potential exposure to groundwater constituents that exceed the safe drinking water standards or acceptable risk levels. Manage DNAPL in accordance with EPA guidance on NAPLs.

Additional CAOs

- Perform comprehensive corrective actions that integrate the components of the Facility-wide and the regulated unit corrective measures;
- Optimize long-term operations and maintenance (O&M); and
- Establish appropriate Institutional Controls to ensure that future use is consistent with the CAOs.

To achieve the CAOs, the facility completed the Corrective Measures (CM) Work Plan in December 2011.The CM Work Plan presents the approach to implement corrective measures at the following areas:

Inactive Non-Process Area (INPA)

The area of excavation is approximately 5,200 square feet in size. Six inches of soil, [approximately 100 cubic yards (cy)] will be excavated from this area and placed in the on-site Corrective Action Management Unit (CAMU). Imported fill material will be used to restore the excavated area to original contours. Once the area has been backfilled and graded, the area will be revegetated (seeded and mulched). Mulching will consist of the placement of an erosion control mulch blanket.

Channel Below Outfall 001

The area of excavation is approximately 93,300 square feet. Two feet of soil (approximately 6,900 cy) will be excavated from this area and placed in the on-site CAMU. Imported fill material will be used to restore the excavated area to near-original contours. Once the area has been backfilled and graded, the area will be revegetated.

Two Localized and Nearby Segments Within Two Mile Creek

Two areas totaling approximately 2,300 square feet will be excavated within the streambed. One foot of soil (approximately 85 cy) will be excavated from these areas, which are located on the north and south sides of North Koppers Street, and placed in the on-site CAMU. Imported fill material with a gradation similar to the existing channel substrate will be used to restore the channel bottom. Once the streambed has been reestablished, any areas adjacent to the creek that were disturbed in order to provide access to the work areas will be revegetated.

The construction activities described in the CM Work Plan commenced on April 23, 2012 and concluded in November 2012. A construction completion report will be submitted to SCDHEC for review and approval. In addition, beginning at the end of the fifth year of operation and maintenance and monitoring, the system effectiveness will be evaluated at 5-year intervals. In addition, a Corrective Measure completion report will be submitted to SCDHEC when the corrective measure criteria have been satisfied.

The Facility is subject to environmental investigation and remedial obligations pursuant to CERCLA, the requirements of the RCRA CO and the corrective action requirements of the South Carolina Hazardous and Solid Waste Amendments (HSWA) portion of the Post-Closure Care Permit. EPA and SCDHEC have agreed that the RCRA Program has primary responsibility for the ongoing activities at the Site.

B. Determination That the Site Meets the RCRA Deferral Criteria Set Forth in EPA's March 20, 1995, Policy

1. If evaluated under EPA's current RCRA/NPL deferral policy, the Site would be eligible for deferral from listing on the NPL.

At the time of the NPL listing, the Site posed a threat to human health and the environment that was not being addressed under CERCLA, or RCRA corrective action authorities. At that time, EPA determined that the most expeditious way to address the contamination at the Site was through the use of CERCLA authorities. Prior to the enactment of the HSWA in 1984 only releases to groundwater from regulated units, i.e. surface impoundments, waste piles, land treatment areas, and landfills, were subject to corrective action requirements under RCRA. The enactment of HSWA greatly expanded RCRA Subtitle C corrective action authorities. As a result, KCI (now known as Beazer) and EPA on February 3, 1988, entered into a RCRA CO and the order has been addressing all of the contamination at the Site pursuant to section 3008(h) of RCRA. In addition, in September 1995, SCDHEC issued the Post-Closure Care Hazardous Waste Permit requiring KI and Beazer to conduct long-term monitoring and maintenance activities necessary to protect the surrounding environment and population from releases of hazardous constituents. This 1995 Post-Closure Care Hazardous Waste Permit included post-closure care of the three former RCRA surface impoundments and the thirty-three SWMUs. Furthermore, the 1995 Post-Closure Care Hazardous Waste Permit incorporates the RCRA CO. KCI (now known as Beazer) is fulfilling the conditions of the RCRA CO, and is in compliance with the RCRA CO, and the Post-Closure Care Hazardous Waste Permit. Consequently, if this Site was evaluated for NPL listing under the current conditions, the Site would qualify for deferral to RCRA.

2. The CERCLA Site is currently being addressed by RCRA corrective action authorities under an existing enforceable order, and permit containing corrective action provisions.

As described previously, EPA and Beazer (previously known as KCI) entered into a RCRA CO, pursuant to section 3008(h) of RCRA, on February 3, 1988. Under the terms of that RCRA CO, Beazer (then known as KCI) was required to complete an on-site and off-site investigation of the nature and extent of the release of hazardous wastes from the Site, and to conduct a study to evaluate various cleanup alternatives.

Beazer is fulfilling the conditions of the RCRA CO, and is currently in compliance with the RCRA CO, and the Post-Closure Care Hazardous Waste Permit.

As also described previously, the 1988 RCRA CO will remain in effect until such time when SCDHEC determines that the terms of this order have been satisfied. All known contaminated media (groundwater and soils), on and off-site, are being addressed through SCDHEC, and EPA's exercise of its corrective action authorities pursuant to RCRA.

3. Response under RCRA is progressing adequately.

Corrective action is progressing satisfactorily under the RCRA CO, as described above. Pursuant to the RCRA CO, Beazer has completed the RFI, HERA, CMS, and is implementing the selected remedy at the Facility. To prevent off-site migration of groundwater contamination, and treat contaminated groundwater, Beazer (previously known as KCI) constructed a groundwater containment and recovery system at the Facility in August 1983. Operation and monitoring activities for the groundwater containment and recovery system are ongoing. The construction activities required to address the soil contamination concluded in November 2012. Approximately 7000 cubic yards of soil have been excavated from the Inactive Non-Process Area, and the Channel below Outfall 001. This soil was placed in the on-site CAMU. Imported fill material was used to restore the excavated areas to original contours. In addition, completion of the construction activities included excavation of two areas within Two Mile Creek. There has been no history of protracted negotiations due to lack of cooperation.

4. Deletion would not disrupt an ongoing CERCLA action.

The RCRA Program is implementing the evaluation and remedy selection activities normally covered during the Remedial Investigation/Feasibility Study process under CERCLA, under the RCRA CO. In a deferral memorandum dated October 26, 1987, EPA issued a decision to transfer the Facility from Dual CERCLA/RCRA Coordination to 'Exclusive RCRA Lead and Responsibility'. There are no ongoing CERCLA actions. In addition, EPA and SCDHEC have agreed that response activities at the Facility will continue to proceed through RCRA.

The EPA has received concurrence from SCDHEC. The EPA concludes that this Site meets the criteria under the NPL deletion policy, and announces its intention to delete the Site from the NPL. The EPA believes it is appropriate to delete sites from the NPL based upon the deferral policy to RCRA under these established circumstances. Deletion of this Site from the NPL, to defer it to RCRA Subtitle C corrective action authorities, avoids possible duplication of effort, and the need for Beazer to follow more than one set of regulatory procedures. Moreover, EPA and SCDHEC have determined that remedial actions conducted at the Facility to date and scheduled in the future under RCRA, have been and will remain protective of public health, and the environment.

List of Subjects in 40 CFR Part 300

Environmental protection, Air pollution control, Chemicals, Hazardous waste, Hazardous substances, Intergovernmental relations, Penalties, Reporting and recordkeeping requirements, Superfund, Water pollution control, Water supply.

Authority: 33 U.S.C. 1321(c)(2); 42 U.S.C. 9601–9657; E.O. 12777, 56 FR 54757, 3 CFR, 1991 Comp., p. 351; E.O. 12580, 52 FR 2923, 3 CFR, 1987 Comp., p. 193.

Dated: March 13, 2013.

Gwendolyn Keyes Fleming,

Regional Administrator, Region 4.

[FR Doc. 2013–09540 Filed 4–23–13; 8:45 am]

BILLING CODE 6560–50–P

FEDERAL COMMUNICATIONS COMMISSION

47 CFR Parts 1, 2, 27 and 90

[PS Docket No. 12–94; PS Docket No. 06–229; and WT Docket No. 06–150; FCC 13–31]

Implementing Public Safety Broadband Provisions of the Middle Class Tax Relief and Job Creation Act of 2012

AGENCY: Federal Communications Commission.

ACTION: Proposed rule.

SUMMARY: In this document, the Federal Communications Commission (Commission) sought comment on certain proposals to implement provisions of the Middle Class Tax Relief and Job Creation Act of 2012 (Public Safety Spectrum Act) governing deployment of a nationwide public safety broadband network in the 700 MHz band under a nationwide license issued to the First Responder Network Authority (FirstNet). In particular, the Commission considered the adoption of initial rules to protect against harmful radio frequency interference in the spectrum designated for public safety services, as well as other matters related to FirstNet's license and to facilitating the transition directed under the Public Safety Spectrum Act. The proposals considered in the document are intended to provide a solid foundation for FirstNet's operations, taking into account FirstNet's need for flexibility in carrying out its statutory duties under the Public Safety Spectrum Act to establish a nationwide public safety broadband network.

DATES: Submit comments on or before May 24, 2013. Submit reply comments on or before June 10, 2013.

FOR FURTHER INFORMATION CONTACT: Gene Fullano, Federal Communications Commission, Public Safety and Homeland Security Bureau, 445 12th Street SW., Room 7–C747, Washington, DC 20554. Telephone: (202)–418–0492, email: *genaro.fullano@fcc.gov.*

SUPPLEMENTARY INFORMATION: In the *Notice of Proposed Rulemaking (NPRM),* FCC 13–31, adopted March 7, 2013, and released March 8, 2013, the Commission seeks comment on certain proposals to implement provisions of the Middle Class Tax Relief and Job Creation Act of 2012 (''Public Safety Spectrum Act'' or ''Act'') [1] governing deployment of a nationwide public safety broadband network in the 700 MHz band under a nationwide license issued to the FirstNet. The *NPRM* addresses technical service rules for the new public safety broadband network to be established pursuant to the Public Safety Spectrum Act. It then considers the Commission's statutory responsibilities as they relate to oversight of FirstNet. Finally, it addresses different classes of incumbents now occupying portions of the spectrum licensed to FirstNet. These proposals are based on the Commission's established authority under the Communications Act to regulate use of the spectrum consistent with the public interest, convenience and necessity, including the authority to prescribe power limits and prevent interference between stations licensed by the Commission,[2] as well as its licensing authority over FirstNet provided by the Public Safety Spectrum Act,[3] and its authority under that Act ''to take all actions necessary to facilitate the transition'' of the existing public safety broadband spectrum to FirstNet.

[1] *See* Middle Class Tax Relief and Job Creation Act of 2012, Public Law 112–96, 126 Stat. 156 (2012).

[2] *See, e.g.,* 47 U.S.C. 303(c), 303(e)–(g), 303(r), 337(d). *See also id.* sec. 151, 154(i).

[3] *See* Public Safety Spectrum Act 6201(a)–(b).

The *Notice of Proposed Rulemaking* is available at *http://transition.fcc.gov/Daily_Releases/Daily_Business/2013/db0308/FCC-13-31A1.pdf.*

Procedural Matters

Paperwork Reduction Act

The *Notice of Proposed Rulemaking* does not contain proposed information collection(s) subject to the Paperwork Reduction Act of 1995 (PRA), Public Law 104–13. In addition, therefore, it does not contain any new or modified information collection burden for small business concerns with fewer than 25 employees, pursuant to the Small Business Paperwork Relief Act of 2002, Public Law 107–198, *see* 44 U.S.C. 3506(c)(4)INITIAL

Regulatory Flexibility Analysis

As required by the Regulatory Flexibility Act (RFA),[4] the Commission has prepared this present Initial Regulatory Flexibility Analysis (IRFA) of the possible significant economic impact on small entities by the policies and rules proposed in this *Notice of Proposed Rulemaking* (*Notice).* Written public comments are requested on this IRFA. Comments must be identified as responses to the IRFA and must be filed by the deadlines for comments provided in this *NPRM.* The Commission will send a copy of this *Notice,* including this IRFA, to the Chief Counsel for Advocacy of the Small Business Administration (SBA).[5] In addition, the *NPRM* and IRFA (or summaries thereof) will be published in the **Federal Register**.[6]

A. Need for, and Objectives of, the Proposed Rules

The *Notice of Proposed Rulemaking* (*NPRM*) seeks comment on proposals to implement provisions of the Middle Class Tax Relief and Job Creation Act of 2012 (''Public Safety Spectrum Act'' or ''Act'')[7] governing deployment of a nationwide public safety broadband network in the 700 MHz band.

The Public Safety Spectrum Act establishes the First Responder Network Authority (FirstNet) to oversee the construction and operation of this network as licensee of both the existing public safety broadband spectrum (763–769/793–799 MHz) and the spectrally adjacent D Block spectrum (758–763/788–793 MHz).[8] The Act directs the Federal Communications Commission (FCC or Commission) to reallocate the D Block for public safety services,[9] to license the D Block and the existing public safety broadband spectrum to FirstNet[10] and to take other actions necessary to ''facilitate the transition'' of such existing spectrum to FirstNet.[11]

Proposals in the *NPRM* are intended to provide a solid foundation for FirstNet's operations, taking into account FirstNet's need for flexibility in carrying out its statutory duties under the Public Safety Spectrum Act to establish a nationwide public safety broadband network.

This *NPRM* seeks comment in three areas. First, we address technical service rules for the new public safety broadband network to be established pursuant to the Public Safety Spectrum Act. We next seek comment on the exercise of the Commission's statutory responsibilities as they relate to oversight of FirstNet's operations. Finally, we seek comment on the transition of different classes of incumbents now occupying portions of the spectrum to be licensed to FirstNet. These proposals are based on our established authority under the Communications Act to regulate use of the spectrum consistent with the public interest, convenience and necessity, including the authority to prescribe power limits and prevent interference between stations licensed by the Commission,[12] as well as our licensing authority over FirstNet provided by the Public Safety Spectrum Act,[13] and our authority under the Public Safety Spectrum Act ''to take all actions necessary to facilitate the transition'' of the existing public safety broadband spectrum to FirstNet.[14] We seek comment on the scope of our authority as it relates to these proposals, and how such authority can most appropriately accommodate the Public Safety Spectrum Act's delegation to FirstNet of the responsibility to develop ''the technical and operational requirements of the network.''[15] In offering these proposals, we acknowledge the crucial importance of FirstNet's endeavor and its need for flexibility in carrying out its obligations under the Public Safety Spectrum Act.

B. Legal Basis

The proposed action is authorized under Sections 1, 2, 4(i), 5(c), 7, 301, 302, 303, 307, 308, 309, 310, 311, 314, 316, 319, 324, 332, 333, 336, 337 and 403 of the Communications Act of 1934, as amended, 47 U.S.C. 151, 152, 154(i), 155(c), 157, 301, 302, 303, 307, 308, 309, 310, 311, 314, 316, 319, 324, 332, 333, 336, 337 and 403, and the Middle Class Tax Relief and Job Creation Act of 2012, Public Law 112–96, 126 Stat. 156 (2012).

C. Description and Estimate of the Number of Small Entities to Which the Proposed Rules Will Apply

The RFA directs agencies to provide a description of, and, where feasible, an estimate of, the number of small entities that may be affected by the rules adopted herein.[16] The RFA generally defines the term ''small entity'' as having the same meaning as the terms ''small business,'' ''small organization,'' and ''small governmental jurisdiction.''[17] In addition, the term ''small business'' has the same meaning as the term ''small business concern'' under the Small Business Act.[18] A ''small business concern'' is one which: (1) Is independently owned and operated; (2) is not dominant in its field of operation; and (3) satisfies any additional criteria established by the Small Business Administration (''SBA'').[19] Below, we further describe and estimate the number of small entity licensees and regulatees that may be affected by the rules changes we propose in this *NPRM.*

As an initial matter, we observe that the Public Safety Spectrum Act does not contemplate that ''small governmental jurisdictions'' would be directly authorized to serve as operators of their own 700 MHz public safety broadband networks. Rather, the Spectrum Act

[4] *See* 5 U.S.C. 603. The RFA, *see* 5 U.S.C. § 601 *et. seq.,* has been amended by the Contract With America Advancement Act of 1996, Public Law 104–121, 110 Stat. 847 (1996) (CWAAA). Title II of the CWAAA is the Small Business Regulatory Enforcement Fairness Act of 1996 (SBREFA).

[5] *See* 5 U.S.C. 603(a).

[6] *See id.*

[7] Middle Class Tax Relief and Job Creation Act of 2012, Public Law 112–96, 126 Stat. 156 (2012).

[8] *See id.* sec. 6204.

[9] *See id.* sec. 6101.

[10] *See id.* sec. 6201(a).

[11] *See id.* sec. 6201(c).

[12] *See, e.g.,* 47 U.S.C. 303(c), 303(e)–(g), 303(r), 337(d). *See also id.* sec.151, 154(i).

[13] *See* Public Safety Spectrum Act sec. 6201(a)–(b). *See also id.* sec. 6206(b)(3) (requiring rural coverage milestones for FirstNet, ''consistent with the license granted under section 6201'').

[14] *See* Public Safety Spectrum Act sec. 6201(c). *See also id.* Sec. 6213 (authority of Commission to ''take any action necessary to assist [FirstNet] in effectuating its duties and responsibilities'' under Public Safety Spectrum Act).

[15] *See id.* sec. 6206(c)(1)(B).

[16] 5 U.S.C. 604(a)(3).

[17] 5 U.S.C. 601(6).

[18] 5 U.S.C. 601(3) (incorporating by reference the definition of ''small-business concern'' in the Small Business Act, 15 U.S.C. 632). Pursuant to 5 U.S.C. 601(3), the statutory definition of a small business applies ''unless an agency, after consultation with the Office of Advocacy of the Small Business Administration and after opportunity for public comment, establishes one or more definitions of such term which are appropriate to the activities of the agency and publishes such definition(s) in the **Federal Register**.'' 5 U.S.C. 601(3).

[19] 15 U.S.C. 632.

charges a single entity, FirstNet, with constructing, operating and maintaining a 700 MHz public safety broadband network on a nationwide basis.[20] Accordingly, the technical service rules and other requirements the *NPRM* proposes or considers for the combined 700 MHz public safety broadband spectrum—in which FirstNet will operate on a nationwide basis—will not directly affect a substantial number of small entities. The absence of a direct effect on a substantial number of small entities suggests that it is not necessary to prepare a regulatory flexibility analysis in connection with these proposed requirements.[21]

Small Businesses, Small Organizations, and Small Governmental Jurisdictions. Our action may, over time, affect small entities that are not easily categorized at present. We therefore describe here, at the outset, three comprehensive, statutory small entity size standards.[22] First, nationwide, there are a total of approximately 27.5 million small businesses, according to the SBA.[23] In addition, a ''small organization'' is generally ''any not-for-profit enterprise which is independently owned and operated and is not dominant in its field.'' [24] Nationwide, as of 2007, there were approximately 1, 621,315 small organizations.[25] Finally, the term ''small governmental jurisdiction'' is defined generally as ''governments of cities, towns, townships, villages, school districts, or special districts, with a population of less than fifty thousand.'' [26] Census Bureau data for 2011 indicate that there were 89,476 local governmental jurisdictions in the United States.[27] We estimate that, of this total, as many as 88, 506 entities may qualify as ''small governmental jurisdictions.'' [28] Thus, we estimate that most governmental jurisdictions are small.

Public Safety Radio Licensees. As a general matter, Public Safety Radio Pool licensees include police, fire, local government, forestry conservation, highway maintenance, and emergency medical services.[29] Because of the vast array of public safety licensees, the Commission has not developed a small business size standard specifically applicable to public safety licensees. The SBA rules contain a definition for Wireless Telecommunications Carriers (except Satellite) which encompasses business entities engaged in radiotelephone communications employing no more that 1,500 persons.[30] With respect to local governments, in particular, since many governmental entities comprise the licensees for these services, we include under public safety services the number of government entities affected. According to Commission records, there are a total of approximately 133,870 licenses within these services.[31] There are 2,442 licenses in the 4.9 GHz band, based on an FCC Universal Licensing System search of May 23, 2012.[32] We estimate that fewer than 2,442 public safety radio licensees hold these licenses because certain entities may have multiple licenses.

Regional Planning Committees. Neither the Commission nor the SBA has developed a small business size standard specifically applicable to Regional Planning Committees (RPCs) and the National Regional Planning Council (NRPC). As described by the NRPC, ''[t]he National Regional Planning Council (NRPC) is an advocacy body formed in 2007 that supports public safety communications spectrum management by Regional Planning Committees (RPC) in the 700 MHz and 800 MHz NPSPAC public safety spectrum as required by the Federal Communications Commission.'' [33] The NRPC states that ''Regional Planning Committees consist of public safety volunteer spectrum planners and members that dedicate their time, in addition to the time spent in their regular positions, to coordinate spectrum efficiently and effectively for the purpose of making it available to public safety agency applicants in their respective region.'' [34] There are 54 formed RPCs and one unformed RPC.[35] The Commission has not developed a small business size standard specifically applicable to RPCs and the NRPC. The SBA rules, however, contain a definition for Wireless Telecommunications Carriers (except Satellite) which encompasses business entities engaged in radiotelephone communications employing no more that 1,500 persons.[36] Under this category and size standard, we estimate that all of the RPCs and the NRPC can be considered small.

Radio and Television Broadcasting and Wireless Communications

[20] *See* Spectrum Act § 6206(b). The statute contemplates that portions of the network may be deployed by State governments, *see* Spectrum Act 6302(e), which are categorically excluded from the definition of ''small governmental jurisdictions'' for purposes of RFA.

[21] *See, e.g., Mid-Tex Elec. Co-op., Inc.* v. *F.E.R.C.,* 773 F.2d 327, 334 (DC Cir. 1985).

[22] *See* 5 U.S.C. 601(3)–(6).

[23] *See* SBA, Office of Advocacy, ''Frequently Asked Questions,'' web.sba.gov/faqs (last visited May 6,2011; figures are from 2009).

[24] 5 U.S.C. 601(4).

[25] Independent Sector, The New Nonprofit Almanac & Desk Reference (2010).

[26] 5 U.S.C. 601(5).

[27] U.S. Census Bureau, Statistical Abstract of the United States: 2011, Table 427 (2007).

[28] The 2007 U.S Census data for small governmental organizations indicate that there were 89, 476 ''Local Governments'' in 2007. (U.S. CENSUS BUREAU, STATISTICAL ABSTRACT OF THE UNITED STATES 2011, Table 428.) The criterion by which the size of such local governments is determined to be small is a population of 50,000. However, since the Census Bureau does not specifically apply that criterion, it cannot be determined with precision how many of such local governmental organizations is small. Nonetheless, the inference seems reasonable that substantial number of these governmental organizations has a population of less than 50, 000. To look at Table 428 in conjunction with a related set of data in Table 429 in the Census's Statistical Abstract of the U.S., that inference is further supported by the fact that in both Tables, many entities that may well be small are included in the 89,476 local governmental organizations, *e.g.* county, municipal, township and town, school district and special district entities. Measured by a criterion of a population of 50,000 many specific sub-entities in this category seem more likely than larger county-level governmental organizations to have small populations. Accordingly, of the 89,746 small governmental organizations identified in the 2007 Census, the Commission estimates that a substantial majority is small.

[29] *See* subparts A and B of Part 90 of the Commission's Rules, 47 CFR 90.1–90.22. Police licensees serve state, county, and municipal enforcement through telephony (voice), telegraphy (code), and teletype and facsimile (printed material). Fire licensees are comprised of private volunteer or professional fire companies, as well as units under governmental control. Public Safety Radio Pool licensees also include state, county, or municipal entities that use radio for official purposes. State departments of conservation and private forest organizations comprise forestry service licensees that set up communications networks among fire lookout towers and ground crews. State and local governments are highway maintenance licensees that provide emergency and routine communications to aid other public safety services to keep main roads safe for vehicular traffic. Emergency medical licensees use these channels for emergency medical service communications related to the delivery of emergency medical treatment. Additional licensees include medical services, rescue organizations, veterinarians, persons with disabilities, disaster relief organizations, school buses, beach patrols, establishments in isolated areas, communications standby facilities, and emergency repair of public communications facilities.

[30] *See* 13 CFR 121.201, NAICS code 517210.

[31] This figure was derived from Commission licensing records as of June 27, 2008. Licensing numbers change on a daily basis. We do not expect this number to be significantly smaller today. This does not indicate the number of licensees, as licensees may hold multiple licenses. There is no information currently available about the number of public safety licensees that have less than 1,500 employees.

[32] Based on an FCC Universal Licensing System search of May 23, 2012. Search parameters: Radio Service = PA—Public Safety 4940–4990 MHz Band; Authorization Type = Regular; Status = Active.

[33] *See* Petition for Rulemaking to allow Aircraft voice operations on Secondary Trunking Channels in the 700 MHz band, RM–11433, Comments of the National Regional Planning Council at 1 (filed July 15, 2011).

[34] *Id.*

[35] *See http://publicsafety.fcc.gov/pshs/public-safety-spectrum/700–MHz/rpc-map.htm.*

[36] *See* 13 CFR 121.201, NAICS code 517210.

Equipment Manufacturing. The Census Bureau defines this category as follows: ''This industry comprises establishments primarily engaged in manufacturing radio and television broadcast and wireless communications equipment. Examples of products made by these establishments are: transmitting and receiving antennas, cable television equipment, GPS equipment, pagers, cellular phones, mobile communications equipment, and radio and television studio and broadcasting equipment.'' [37] The SBA has developed a small business size standard for Radio and Television Broadcasting and Wireless Communications Equipment Manufacturing, which is: all such firms having 750 or fewer employees. According to Census Bureau data for 2007, there were a total of 939 establishments in this category that operated for part or all of the entire year. According to Census bureau data for 2007, there were a total of 919 firms in this category that operated for the entire year. Of this total, 771 had less than 100 employees and 148 had more than 100 employees.[38] Thus, under that size standard, the majority of firms can be considered small.

D. Description of Projected Reporting, Recordkeeping, and Other Compliance Requirements

The two segments of the spectrum that will be licensed to FirstNet—the D Block and the existing public safety broadband spectrum—are currently regulated under separate FCC rule parts, Parts 27 and 90. The *NPRM* proposes the development of a unified set of technical service rules to govern this spectrum, largely by consolidating under Part 90 the requirements applicable to both segments. Because FirstNet will be the nationwide licensee of this spectrum, it will be primarily responsible on a nationwide basis for ensuring compliance with any such requirements that are ultimately adopted. Accordingly, we do not believe that these requirements would have a significant economic impact on a substantial number of small entities.

The *NPRM* also considers establishing certification requirements for equipment operated in the combined public safety broadband spectrum. These requirements would be applicable to entities, such as RF equipment manufacturers, seeking to certify equipment for operation in this spectrum. We observe that equipment certification is a longstanding Commission practice, widely applicable to equipment marketed for operation in radiospectrum licensed by the Commission. Any certification requirements adopted pursuant to the *NPRM* are unlikely to depart significantly from current practice. In fact, a primary purpose of the certification requirements proposed in the *NPRM* is to consolidate under a common Part 90 rule provision existing requirements that separately govern the D Block and the public safety broadband spectrum. Such rules are unlikely to have a significant adverse economic impact on any small entities, much less a substantial number of them.

The *NPRM* also considers rules to govern the transition of incumbent narrowband, wideband and commercial systems currently authorized to operate in the spectrum to be licensed to FirstNet. With respect to the first category only, there may arguably be a significant number of small entities currently operating.[39] In considering various transition options—including relocation of existing operations at the operators' expense—the *NPRM* seeks comment on ways to minimize the economic burden on incumbent operators. The *NPRM* seeks comment on whether FirstNet or some third party source could fund relocation, thereby relieving any incumbent small entities of this potentially substantial economic burden. It also seeks comment on whether FirstNet could accommodate incumbent narrowband operations within a portion of its licensed spectrum, either indefinitely or on a transitional basis. We seek comment in this IRFA on whether there are additional steps the Commission should take to minimize any economic burden its proposals might create for small entities operating narrowband systems in the spectrum to be licensed to FirstNet.

E. Steps Taken To Minimize Significant Economic Impact on Small Entities, and Significant Alternatives Considered

The RFA requires an agency to describe any significant alternatives that it has considered in developing its approach, which may include the following four alternatives (among others): ''(1) the establishment of differing compliance or reporting requirements or timetables that take into account the resources available to small entities; (2) the clarification, consolidation, or simplification of compliance and reporting requirements under the rule for such small entities; (3) the use of performance rather than design standards; and (4) an exemption from coverage of the rule, or any part thereof, for such small entities.'' [40]

As an initial matter, we find that one possible alternative—to refrain from pursuing the adoption of rules in Docket 12–94—is untenable given the clear directives of the Public Safety Spectrum Act regarding reallocation of the D Block and the licensing of spectrum to FirstNet. This *NPRM* is necessary to ensure that a solid regulatory foundation is in place to support FirstNet's operations under the Act.

We also do not believe it would be tenable to establish differing requirements for small entities or to exempt such entities from rules adopted pursuant to the *NPRM.* Given the importance of ensuring that the public safety broadband network is technically and operationally viable on a nationwide basis, it is important that network be governed by a common set of rules and requirements.

F. Federal Rules That May Duplicate, Overlap, or Conflict With the Proposed Rule

1. None.

List of Subjects

47 CFR Part 1

Administrative practice and procedure, Civil rights, Claims, Communications common carriers, Cuba, Drug abuse, Environmental impact statements, Equal access to justice, Equal employment opportunity, Federal buildings and facilities, Government employees, Income taxes, Indemnity payments, Individuals with disabilities, Investigations, Lawyers, Metric system, Penalties, Radio, Reporting and recordkeeping requirements, Satellites, Telecommunications, Television, Wages.

[37] The NAICS Code for this service 334220. *See* 13 C.F.R 121/201. *See also http://factfinder.census.gov/servlet/IBQTable?_bm=y&-fds_name=EC0700A1&-geo_id=&-_skip=300&-ds_name=EC0731SG2&-_lang=en*

[38] *See http://factfinder.census.gov/servlet/IBQTable?_bm=y&-geo_id=&-fds_name=EC0700A1&-_skip=4500&-ds_name=EC0731SG3&-_lang=en.*

[39] In addition to a number of state governments, an estimated twenty-five cities and counties are authorized to operate narrowband or wideband networks in the existing public safety broadband spectrum. Of these, we estimate that only a small number would qualify as ''small government jurisdictions.'' We nevertheless consider means of minimizing the economic impact that proposals adopted pursuant to the *NPRM* might create for such jurisdictions.

[40] 5 U.S.C. 603(c)(1)–(c)(4).

47 CFR Part 2

Communications equipment, Disaster assistance, Imports, Radio, Reporting and recordkeeping requirements, Telecommunications, Television, Wiretapping and electronic surveillance.

47 CFR Part 27

Communications common carriers, Radio.

47 CFR Part 90

Administrative practice and procedure, Business and industry, Civil defense, Common carriers, Communications equipment, Emergency medical services, Individuals with disabilities, Radio, Reporting and recordkeeping requirements.

Federal Communications Commission.

Marlene Dortch,

Secretary.

For the reasons discussed in the preamble, the Federal Communications Commission proposes to amend 47 CFR parts 1, 2, 27 and 90 as follows:

PART 1—PRACTICE AND PROCEDURE

■ 1. The authority citation for part 1 continues to read as follows:

Authority: 15 U.S.C. 79 *et seq.;* 47 U.S.C. 151, 154(i), 154(j), 155, 157, 225, 227, 303(r), and 309, Cable Landing License Act of 1921, 47 U.S.C. 35–39, and the Middle Class Tax Relief and Job Creation Act of 2012, Pub. L. 112–96.

■ 2. Section 1.9005 is amended by revising paragraph (k) to read as follows:

§ 1.9005 Included services.

* * * * *

(k) The Wireless Communications Service in the 746–758 MHz, 775–788 MHz, and 805–806 MHz bands (part 27 of this chapter);

* * * * *

PART 2—FREQUENCY ALLOCATIONS AND RADIO TREATY MATTERS; GENERAL RULES AND REGULATIONS

■ 3. The authority citation for part 2 continues to read as follows:

Authority: 47 U.S.C. 154, 302(a), 303, and 336, unless otherwise noted.

■ 4. Section 2.103 is amended by revising paragraphs (a) introductory text and paragraph (c) to read as follows:

§ 2.103 Federal Use of non-Federal frequencies.

(a) Federal stations may be authorized to use non-Federal frequencies in the bands above 25 MHz (except the 758–775 MHz and 788–805 MHz public safety bands) if the Commission finds that such use is necessary for coordination of Federal and non-Federal activities: Provided, however, that:

* * * * *

(c) Federal stations may be authorized by the First Responder Network Authority to use channels in the 758–769 MHz and 788–799 MHz public safety bands.

PART 27—MISCELLANEOUS WIRELESS COMMUNICATIONS SERVICES

■ 5. The authority citation for part 27 continues to read as follows:

Authority: 47 U.S.C. 154, 301, 302a, 303, 307, 309, 332, 336, and 337 unless otherwise noted.

■ 6. Section 27.6 is amended by revising paragraph (b) introductory text to read as follows:

§ 27.6 Service Areas.

* * * * *

(b) *746–758 MHz, 775–788 MHz, and 805–806 MHz bands.* WCS service areas for the 746–758 MHz, 775–788 MHz, and 805–806 MHz bands are as follows:

* * * * *

■ 7. Section 27.11 is amended by revising paragraph (c) introductory text to read as follows:

§ 27.11 Initial authorization.

* * * * *

(c) *746–758 MHz, 775–788 MHz, and 805–806 MHz bands.* Initial authorizations for the 746–758 MHz, 775–788 MHz, and 805–806 MHz bands shall be for paired channels of 1, 5, 6, or 11 megahertz of spectrum in accordance with § 27.5(b).

* * * * *

■ 8. Section 27.13 is amended by revising the first sentence in paragraph (b) to read as follows:

§ 27.13 License Period.

* * * * *

(b) *698–758 MHz and 776–788 MHz bands.* Initial authorizations for the 698–758 MHz and 776–788 MHz bands will extend for a term not to exceed ten years from February 17, 2009, except that initial authorizations for a Part 27 licensee that provides broadcast services, whether exclusively or in combination with other services, will not exceed eight years. * * *

* * * * *

■ 9. Section 27.14 is amended by revising the first sentence in paragraphs (a), and (e), and removing paragraphs (m) and (n), and redesignating paragraphs (o) and (p) as paragraphs (m) and (n) to read as follows:

§ 27.14 Construction requirements; Criteria for Renewal.

(a) AWS and WCS licensees, with the exception of WCS licensees holding authorizations for Block A in the 698–704 MHz and 728–734 MHz bands, Block B in the 704–710 MHz and 734–740 MHz bands, Block E in the 722–728 MHz band, Block C, C1 or C2 in the 746–757 MHz and 776–787 MHz bands, Block A in the 2305–2310 MHz and 2350–2355 MHz bands, Block B in the 2310–2315 MHz and 2355–2360 MHz bands, Block C in the 2315–2320 MHz band, and Block D in the 2345–2350 MHz band, must, as a performance requirement, make a showing of ''substantial service'' in their license area within the prescribed license term set forth in § 27.13.* * *

* * * * *

(e) Comparative renewal proceedings do not apply to WCS licensees holding authorizations for Block A in the 698–704 MHz and 728–734 MHz bands, Block B in the 704–710 MHz and 734–740 MHz bands, Block C in the 710–716 MHz and 740–746 MHz bands, Block D in the 716–722 MHz band, Block E in the 722–728 MHz band, or Block C, C1 or C2 in the 746–757 MHz and 776–787 MHz bands. * * *

* * * * *

■ 10. Section 27.15 is amended by revising the first sentence in paragraphs (d)(1)(i) and (d)(2)(i) to read as follows:

§ 27.15 Geographic partitioning and spectrum disaggregation.

* * * * *

(d) * * *

(1) * * *

(i) Except for WCS licensees holding authorizations for Block A in the 698–704 MHz and 728–734 MHz bands, Block B in the 704–710 MHz and 734–740 MHz bands, Block E in the 722–728 MHz band, and Blocks C, C1, and C2 in the 746–757 MHz and 776–787 MHz bands, the following rules apply to WCS and AWS licensees holding authorizations for purposes of implementing the construction requirements set forth in § 27.14. * * *

* * * * *

(2) * * *

(i) Except for WCS licensees holding authorizations for Block A in the 698–704 MHz and 728–734 MHz bands, Block B in the 704–710 MHz and 734–740 MHz bands, Block E in the 722–728 MHz band, and Blocks C, C1, and C2 in the 746–757 MHz and 776–787 MHz bands, the following rules apply to WCS and AWS licensees holding authorizations for purposes for purposes

of implementing the construction requirements set forth in § 27.14.* * *

* * * * *

11. Section 27.50 is amended by revising paragraph (b) introductory text, paragraphs (b)(1) through (b)(7), (b)(7)(i), (b)(8) through (b)(10), (b)(12), (c)(5)(i), and the headings to Table 1 through Table 4 at the end of the section to read as follows:

§ 27.50 Power limits and duty cycle.

* * * * *

(b) The following power and antenna height limits apply to transmitters operating in the 746–758 MHz, 775–788 MHz and 805–806 MHz bands:

(1) * * *

(2) Fixed and base stations transmitting a signal in the 746–757 MHz and 776–787 MHz bands with an emission bandwidth of 1 MHz or less must not exceed an ERP of 1000 watts and an antenna height of 305 m HAAT, except that antenna heights greater than 305 m HAAT are permitted if power levels are reduced below 1000 watts ERP in accordance with Table 1 of this section.

(3) Fixed and base stations located in a county with population density of 100 or fewer persons per square mile, based upon the most recently available population statistics from the Bureau of the Census, and transmitting a signal in the 746–757 MHz and 776–787 MHz bands with an emission bandwidth of 1 MHz or less must not exceed an ERP of 2000 watts and an antenna height of 305 m HAAT, except that antenna heights greater than 305 m HAAT are permitted if power levels are reduced below 2000 watts ERP in accordance with Table 2 of this section.

(4) Fixed and base stations transmitting a signal in the 746–757 MHz and 776–787 MHz bands with an emission bandwidth greater than 1 MHz must not exceed an ERP of 1000 watts/MHz and an antenna height of 305 m HAAT, except that antenna heights greater than 305 m HAAT are permitted if power levels are reduced below 1000 watts/MHz ERP accordance with Table 3 of this section.

(5) Fixed and base stations located in a county with population density of 100 or fewer persons per square mile, based upon the most recently available population statistics from the Bureau of the Census, and transmitting a signal in the 746–757 MHz and 776–787 MHz bands with an emission bandwidth greater than 1 MHz must not exceed an ERP of 2000 watts/MHz and an antenna height of 305 m HAAT, except that antenna heights greater than 305 m HAAT are permitted if power levels are reduced below 2000 watts/MHz ERP in accordance with Table 4 of this section.

(6) Licensees of fixed or base stations transmitting a signal in the 746–757 MHz and 776–787 MHz bands at an ERP greater than 1000 watts must comply with the provisions set forth in paragraph (b)(8) and § 27.55(c).

(7) Licensees seeking to operate a fixed or base station located in a county with population density of 100 or fewer persons per square mile, based upon the most recently available population statistics from the Bureau of the Census, and transmitting a signal in the 746–757 MHz and 776–787 MHz bands at an ERP greater than 1000 watts must:

(i) Coordinate in advance with all licensees authorized to operate in the 698–758 MHz, 775–788, and 805–806 MHz bands within 120 kilometers (75 miles) of the base or fixed station;

* * * * *

(8) Licensees authorized to transmit in the 746–757 MHz and 776–787 MHz bands and intending to operate a base or fixed station at a power level permitted under the provisions of paragraph (b)(6) of this section must provide advanced notice of such operation to the Commission and to licensees authorized in their area of operation. Licensees who must be notified are all licensees authorized to operate in the 758–775 MHz and 788–805 MHz bands under Part 90 of this chapter within 75 km of the base or fixed station and all regional planning committees, as identified in § 90.527 of this chapter, with jurisdiction within 75 km of the base or fixed station. Notifications must provide the location and operating parameters of the base or fixed station, including the station's ERP, antenna coordinates, antenna height above ground, and vertical antenna pattern, and such notifications must be provided at least 90 days prior to the commencement of station operation.

(9) Control stations and mobile stations transmitting in the 746–757 MHz, 776–788 MHz, and 805–806 MHz bands and fixed stations transmitting in the 787–788 MHz and 805–806 MHz bands are limited to 30 watts ERP.

(10) Portable stations (hand-held devices) transmitting in the 746–757 MHz, 776–788 MHz, and 805–806 MHz bands are limited to 3 watts ERP.

* * * * *

(12) For transmissions in the 746–757 and 776–787 MHz bands, licensees may employ equipment operating in compliance with either the measurement techniques described in paragraph (b)(11) or a Commission-approved average power technique. In both instances, equipment employed must be authorized in accordance with the provisions of 27.51.

(c) * * *

* * * * *

(5) * * *

(i) Coordinate in advance with all licensees authorized to operate in the 698–758 MHz, 775–788, and 805–806 MHz bands within 120 kilometers (75 miles) of the base or fixed station;

* * * * *

TABLE 1—PERMISSIBLE POWER AND ANTENNA HEIGHTS FOR BASE AND FIXED STATIONS IN THE 757–758 AND 775–776 MHz BANDS AND FOR BASE AND FIXED STATIONS IN THE 698–757 MHz AND 776–787 MHz BANDS TRANSMITTING A SIGNAL WITH AN EMISSION BANDWIDTH OF 1 MHz OR LESS

Antenna height (AAT) in meters (feet)	Effective radiated power (ERP) (watts)
Above 1372 (4500)	65
Above 1220 (4000) To 1372 (4500)	70
Above 1067 (3500) To 1220 (4000)	75
Above 915 (3000) To 1067 (3500)	100
Above 763 (2500) To 915 (3000)	140
Above 610 (2000) To 763 (2500)	200
Above 458 (1500) To 610 (2000)	350
Above 305 (1000) To 458 (1500)	600
Up to 305 (1000)	1000

TABLE 2—PERMISSIBLE POWER AND ANTENNA HEIGHTS FOR BASE AND FIXED STATIONS IN THE 698–757 MHz AND 776–787 MHz BANDS TRANSMITTING A SIGNAL WITH AN EMISSION BANDWIDTH OF 1 MHz OR LESS

Antenna height (AAT) in meters (feet)	Effective radiated power (ERP) (watts)
Above 1372 (4500)	130
Above 1220 (4000) To 1372 (4500)	140
Above 1067 (3500) To 1220 (4000)	150
Above 915 (3000) To 1067 (3500)	200
Above 763 (2500) To 915 (3000)	280
Above 610 (2000) To 763 (2500)	400
Above 458 (1500) To 610 (2000)	700

TABLE 2—PERMISSIBLE POWER AND ANTENNA HEIGHTS FOR BASE AND FIXED STATIONS IN THE 698–757 MHz AND 776–787 MHz BANDS TRANSMITTING A SIGNAL WITH AN EMISSION BANDWIDTH OF 1 MHz OR LESS—Continued

Antenna height (AAT) in meters (feet)	Effective radiated power (ERP) (watts)
Above 305 (1000) To 458 (1500)	1200
Up to 305 (1000)	2000

TABLE 3—PERMISSIBLE POWER AND ANTENNA HEIGHTS FOR BASE AND FIXED STATIONS IN THE 698–757 MHz AND 776–787 MHz BANDS TRANSMITTING A SIGNAL WITH AN EMISSION BANDWIDTH GREATER THAN 1 MHz

Antenna height (AAT) in meters (feet)	Effective radiated power (ERP) per MHz (watts/MHz)
Above 1372 (4500)	65
Above 1220 (4000) To 1372 (4500)	70
Above 1067 (3500) To 1220 (4000)	75
Above 915 (3000) To 1067 (3500)	100
Above 763 (2500) To 915 (3000)	140
Above 610 (2000) To 763 (2500)	200
Above 458 (1500) To 610 (2000)	350
Above 305 (1000) To 458 (1500)	600
Up to 305 (1000)	1000

TABLE 4—PERMISSIBLE POWER AND ANTENNA HEIGHTS FOR BASE AND FIXED STATIONS IN THE 698–757 MHz AND 776–787 MHz BANDS TRANSMITTING A SIGNAL WITH AN EMISSION BANDWIDTH GREATER THAN 1 MHz

Antenna height (AAT) in meters (feet)	Effective radiated power (ERP) per MHz (watts/MHz)
Above 1372 (4500)	130
Above 1220 (4000) To 1372 (4500)	140
Above 1067 (3500) To 1220 (4000)	150
Above 915 (3000) To 1067 (3500)	200
Above 763 (2500) To 915 (3000)	280

TABLE 4—PERMISSIBLE POWER AND ANTENNA HEIGHTS FOR BASE AND FIXED STATIONS IN THE 698–757 MHz AND 776–787 MHz BANDS TRANSMITTING A SIGNAL WITH AN EMISSION BANDWIDTH GREATER THAN 1 MHz—Continued

Antenna height (AAT) in meters (feet)	Effective radiated power (ERP) per MHz (watts/MHz)
Above 610 (2000) To 763 (2500)	400
Above 458 (1500) To 610 (2000)	700
Above 305 (1000) To 458 (1500)	1200
Up to 305 (1000)	2000

■ 12. Section 27.53 is amended by removing paragraph (d), redesignating paragraphs (e) through (n) as paragraphs (d) through (m), and revising newly redesignated paragraphs (d), (1) and (2) and (e) to read as follows:

§ 27.53 Emission limits.

* * * * *

(d) For operations in the 775–776 MHz and 805–806 MHz bands, transmitters must comply with either paragraphs (d)(1) through (5) of this section or the ACP emission limitations set forth in paragraphs (d)(6) to (d)(9) of this section.

(1) On all frequencies between 758 to 775 MHz and 788 to 805 MHz, the power of any emission outside the licensee's frequency bands of operation shall be attenuated below the transmitter power (P) within the licensed band(s) of operation, measured in watts, by a factor not less than 76 + 10 log (P) dB in a 6.25 kHz band segment, for base and fixed stations;

(2) On all frequencies between 758 to 775 MHz and 788 to 805 MHz, the power of any emission outside the licensee's frequency bands of operation shall be attenuated below the transmitter power (P) within the licensed band(s) of operation, measured in watts, by a factor not less than 65 + 10 log (P) dB in a 6.25 kHz band segment, for mobile and portable stations;

* * * * *

(e) For operations in the 746–758 MHz, 775–788 MHz, and 805–806 MHz bands, emissions in the band 1559–1610 MHz shall be limited to −70 dBW/MHz equivalent isotropically radiated power (EIRP) for wideband signals, and −80 dBW EIRP for discrete emissions of less than 700 Hz bandwidth. For the purpose of equipment authorization, a transmitter shall be tested with an antenna that is representative of the type that will be used with the equipment in normal operation.

* * * * *

■ 13. Section 27.55 is amended by revising paragraph (c) to read as follows:

§ 27.55 Power strength limits.

* * * * *

(c) *Power flux density limit for stations operating in the 746–757 MHz and 776–787 MHz bands.* For base and fixed stations operating in the 746–757 MHz and 776–787 MHz bands in accordance with the provisions of § 27.50(b)(6), the power flux density that would be produced by such stations through a combination of antenna height and vertical gain pattern must not exceed 3000 microwatts per square meter on the ground over the area extending to 1 km from the base of the antenna mounting structure.

■ 14. Section 27.57 is amended by revising paragraph (b) to read as follows:

§ 27.57 International coordination.

* * * * *

(b) Operation in the 698–758 MHz, 775–788 MHz, and 805–806 MHz bands is subject to international agreements between Mexico and Canada. Unless otherwise modified by international treaty, licenses must not cause interference to, and must accept harmful interference from, television broadcast operations in Mexico and Canada.

* * * * *

■ 15. Section 27.60 is amended by revising the introductory text, and paragraph (a)(1)(iii) and the second sentence in paragraphs (b) introductory text and (b)(2)(i); and revising paragraphs (b)(2)(ii), (b)(2)(ii)(A) and (C) to read as follows:

§ 27.60 TV/DTV interference protection criteria.

Base, fixed, control, and mobile transmitters in the 698–758 MHz, 775–788 MHz, and 805–806 MHz frequency bands must be operated only in accordance with the rules in this section to reduce the potential for interference to public reception of the signals of existing TV and DTV broadcast stations transmitting on TV Channels 51 through 68.

(a) * * *

(1) * * *

(iii) For transmitters operating in the 746–758 MHz, 775–788 MHz, and 805–806 MHz frequency bands, 17 dB at the equivalent Grade B contour (41 dBμV/m) (88.5 kilometers (55 miles)) of the DTV station.

* * * * *

(b) * * * Tables to determine the necessary minimum distance from the

698–758 MHz, 775–788 MHz, and 805–806 MHz station to the TV/DTV station, assuming that the TV/DTV station has a hypothetical or equivalent Grade B contour of 88.5 kilometers (55 miles), are located in § 90.309 of this chapter and labeled as Tables B, D, and E. Values between those given in the tables may be determined by linear interpolation.* * *

* * * * *

(2) * * *

(i) Base and fixed stations that operate in the 746–758 MHz and 775–787 MHz bands having an antenna height (HAAT) less than 152 m. (500 ft.) shall afford protection to co-channel and adjacent channel TV/DTV stations in accordance with the values specified in Table B (co-channel frequencies based on 40 dB protection) and Table E (adjacent channel frequencies based on 0 dB protection) in § 90.309 of this chapter.* * *

(ii) Control, fixed, and mobile stations (including portables) that operate in the 787–788 MHz and 805–806 MHz bands and control and mobile stations (including portables) that operate in the 698–757 MHz and 776–787 MHz bands are limited in height and power and therefore shall afford protection to co-channel and adjacent channel TV/DTV stations in the following manner:

(A) For control, fixed, and mobile stations (including portables) that operate in the 787–788 MHz and 805–806 MHz bands and control and mobile stations (including portables) that operate in the 746–757 MHz and 776–787 MHz co-channel protection shall be afforded in accordance with the values specified in Table D (co-channel frequencies based on 40 dB protection for TV stations and 17 dB for DTV stations) in § 90.309 of this chapter.

(C) For control, fixed, and mobile stations (including portables) that operate in the 787–788 MHz and 805–806 MHz bands and control and mobile stations (including portables) that operate in the 698–757 MHz and 776–787 MHz bands adjacent channel protection shall be afforded by providing a minimum distance of 8 kilometers (5 miles) from all adjacent channel TV/DTV station hypothetical or equivalent Grade B contours (adjacent channel frequencies based on 0 dB protection for TV stations and − 23 dB for DTV stations).

* * * * *

■ 16. Section 27.70 is amended by revising paragraphs (a) and (b)(1), and (b)(2) to read as follows:

§ 27.70 Information exchange.

(a) *Prior notification.* Public safety licensees authorized to operate in the 758–775 MHz and 788–805 MHz bands may notify any licensee authorized to operate in the 746–757 or 776–787 MHz bands that they wish to *receive* prior notification of the activation or modification of the licensee's base or fixed stations in their area. Thereafter, the 746–757 or 776–787 MHz band licensee must provide the following information to the public safety licensee at least 10 business days before a new base or fixed station is activated or an existing base or fixed station is modified:

* * * * *

(b) * * *

(1) Allow a public safety licensee to advise the 746–757 or 776–787 MHz band licensee whether it believes a proposed base or fixed station will generate unacceptable interference;

(2) Permit 746–757 and 776–787 MHz band licensees to make voluntary changes in base or fixed station parameters when a public safety licensee alerts them to possible interference; and,

* * * * *

■ 17. Section 27.303 is amended by revising paragraph (a) introductory text to read as follows:

§ 27.303 Upper 700 MHz commercial and public safety coordination zone.

(a) General. CMRS operators are required, prior to commencing operations on fixed or base station transmitters on the 776–787 MHz band that are located within 500 meters of existing or planned public safety base station receivers, to submit a description of their proposed facility to a Commission-approved public safety coordinator.

* * * * *

■ 18. Section 27.501 is revised to read as follows:

§ 27.501 746–758 MHz, 775–788 MHz, and 805–806 MHz bands subject to competitive bidding.

Mutually exclusive initial applications for licenses in the 746–758 MHz, 775–788 MHz, and 805–806 MHz bands are subject to competitive bidding. The general competitive bidding procedures set forth in part 1, subpart Q of this chapter will apply unless otherwise provided in this subpart.

PART 90—PRIVATE LAND MOBILE RADIO SERVICES

■ 19. The authority citation for Part 90 continues to read as follows:

Authority: Sections 4(i), 11, 303(g), 303(r), and 332(c)(7) of the Communications Act of 1934, as amended, 47 U.S.C. 154(i), 161, 303(g), 303(r), and 332(c)(7), and Title VI of the Middle Class Tax Relief and Job Creation Act of 2012, Pub. L. 112–96, 126 Stat. 156.

■ 20. Section 90.179 is amended by revising paragraph (g) to read as follows:

§ 90.179 Shared use of radio stations.

* * * * *

(g) Notwithstanding paragraph (a) of this section, licensees authorized to operate radio systems on Public Safety Pool frequencies designated in § 90.20 may share their facilities with Federal Government entities on a non-profit, cost-shared basis. Such a sharing arrangement is subject to the provisions of paragraphs (b), (d), and (e) of this section, and § 2.103(c) concerning operations in the 758–769 MHz and 788–799 MHz bands. State governments authorized to operate radio systems under § 90.529 may share the use of their systems (for public safety services not made commercially available to the public) with any entity that would be eligible for licensing under § 90.523 and Federal government entities.

* * * * *

■ 21. Section 90.203 is amended by removing paragraph (p).

■ 22. Section 90.205 is amended by revising paragraph (j) to read as follows:

§ 90.205 Power and antenna height limits.

* * * * *

(j) 758–775 MHz and 788–805 MHz. Power and height limitations are specified in §§ 90.541 and 90.542.

* * * * *

■ 23. Section 90.523 is amended by revising the introductory text and paragraph (e) to read as follows:

§ 90.523 Eligibility.

This section implements the definition of public safety services contained in 47 U.S.C. 337(f)(1). The following are eligible to hold Commission authorizations for systems operating in the 769–775 MHz and 799–805 MHz frequency bands:

* * * * *

(e) A nationwide license for the 758–769 MHz and 788–799 MHz bands shall be issued to the First Responder Network Authority.

■ 24. Section 90.533 is amended by revising the introductory text and paragraphs (a) and (c) to read as follows:

§ 90.533 Transmitting sites near the U.S./Canada or U.S./Mexico border.

This section applies to each license to operate one or more public safety transmitters in the 758–775 MHz and 788–805 MHz bands, at a location or locations North of Line A (see § 90.7) or within 120 kilometers (75 miles) of the U.S.-Mexico border, until such time as

agreements between the government of the United States and the government of Canada or the government of the United States and the government of Mexico, as applicable, become effective governing border area non-broadcast use of these bands. Public safety licenses are granted subject to the following conditions:

(a) Public safety transmitters operating in the 758–775 MHz and 788–805 MHz bands must conform to the limitations on interference to Canadian television stations contained in agreement(s) between the United States and Canada for use of television channels in the border area.

* * * * *

(c) Conditions may be added during the term of the license, if required by the terms of international agreements between the government of the United States and the government of Canada or the government of the United States and the government of Mexico, as applicable, regarding non-broadcast use of the 758–775 MHz and 788–805 MHz bands.

■ 25. Section 90.542 is amended by revising paragraph (a) introductory text, paragraphs (a)(1) through (a)(7), and paragraph (a)(8) introductory text, and by revising Tables 1 through 4 and paragraph (b) to read as follows:

§ 90.542 Broadband transmitting power limits.

(a) The following power limits apply to the 758–768/788–798 MHz band:

(1) Fixed and base stations transmitting a signal in the 758–768 MHz band with an emission bandwidth of 1 MHz or less must not exceed an ERP of 1000 watts and an antenna height of 305 m HAAT, except that antenna heights greater than 305 m HAAT are permitted if power levels are reduced below 1000 watts ERP in accordance with Table 1 of this section.

(2) Fixed and base stations located in a county with population density of 100 or fewer persons per square mile, based upon the most recently available population statistics from the Bureau of the Census, and transmitting a signal in the 758–768 MHz band with an emission bandwidth of 1 MHz or less must not exceed an ERP of 2000 watts and an antenna height of 305 m HAAT, except that antenna heights greater than 305 m HAAT are permitted if power levels are reduced below 2000 watts ERP in accordance with Table 2 of this section.

(3) Fixed and base stations transmitting a signal in the 758–768 MHz band with an emission bandwidth greater than 1 MHz must not exceed an ERP of 1000 watts/MHz and an antenna height of 305 m HAAT, except that antenna heights greater than 305 m HAAT are permitted if power levels are reduced below 1000 watts/MHz ERP accordance with Table 3 of this section.

(4) Fixed and base stations located in a county with population density of 100 or fewer persons per square mile, based upon the most recently available population statistics from the Bureau of the Census, and transmitting a signal in the 758–768 MHz band with an emission bandwidth greater than 1 MHz must not exceed an ERP of 2000 watts/MHz and an antenna height of 305 m HAAT, except that antenna heights greater than 305 m HAAT are permitted if power levels are reduced below 2000 watts/MHz ERP in accordance with Table 4 of this section.

(5) Licensees of fixed or base stations transmitting a signal in the 758–768 MHz band at an ERP greater than 1000 watts must comply with the provisions set forth in paragraph (b).

(6) Control stations and mobile stations transmitting in the 758–768 MHz band and the 788–799 MHz band are limited to 30 watts ERP.

(7) Portable stations (hand-held devices) transmitting in the 758–768 MHz band and the 788–799 MHz band are limited to 3 watts ERP.

(8) For transmissions in the 758–768 MHz and 788–798 MHz bands, licensees may employ equipment operating in compliance with either of the following measurement techniques:

* * * * *

TABLE 1—PERMISSIBLE POWER AND ANTENNA HEIGHTS FOR BASE AND FIXED IN THE 758–768 MHZ BAND TRANSMITTING A SIGNAL WITH AN EMISSION BANDWIDTH OF 1 MHZ OR LESS

Antenna height (AAT) in meters (feet)	Effective radiated power (ERP) (watts)
Above 1372 (4500)	65
Above 1220 (4000) To 1372 (4500)	70
Above 1067 (3500) To 1220 (4000)	75
Above 915 (3000) To 1067 (3500)	100
Above 763 (2500) To 915 (3000)	140
Above 610 (2000) To 763 (2500)	200
Above 458 (1500) To 610 (2000)	350
Above 305 (1000) To 458 (1500)	600
Up to 305 (1000)	1000

TABLE 2—PERMISSIBLE POWER AND ANTENNA HEIGHTS FOR BASE AND FIXED STATIONS IN THE 758–768 MHZ BAND TRANSMITTING A SIGNAL WITH AN EMISSION BANDWIDTH OF 1 MHZ OR LESS

Antenna height (AAT) in meters (feet)	Effective radiated power (ERP) (watts)
Above 1372 (4500)	130
Above 1220 (4000) To 1372 (4500)	140
Above 1067 (3500) To 1220 (4000)	150
Above 915 (3000) To 1067 (3500)	200
Above 763 (2500) To 915 (3000)	280
Above 610 (2000) To 763 (2500)	400
Above 458 (1500) To 610 (2000)	700
Above 305 (1000) To 458 (1500)	1200
Up to 305 (1000)	2000

TABLE 3—PERMISSIBLE POWER AND ANTENNA HEIGHTS FOR BASE AND FIXED STATIONS IN THE 758–768 MHZ BAND TRANSMITTING A SIGNAL WITH AN EMISSION BANDWIDTH GREATER THAN 1 MHZ

Antenna height (AAT) in meters (feet)	Effective radiated power (ERP) per MHz (watts/MHz)
Above 1372 (4500)	65
Above 1220 (4000) To 1372 (4500)	70
Above 1067 (3500) To 1220 (4000)	75
Above 915 (3000) To 1067 (3500)	100
Above 763 (2500) To 915 (3000)	140
Above 610 (2000) To 763 (2500)	200
Above 458 (1500) To 610 (2000)	350
Above 305 (1000) To 458 (1500)	600
Up to 305 (1000)	1000

TABLE 4—PERMISSIBLE POWER AND ANTENNA HEIGHTS FOR BASE AND FIXED STATIONS IN THE 758–768 MHZ BAND TRANSMITTING A SIGNAL WITH AN EMISSION BANDWIDTH GREATER THAN 1 MHZ

Antenna height (AAT) in meters (feet)	Effective radiated power (ERP) per MHz (watts/MHz)
Above 1372 (4500)	130
Above 1220 (4000) To 1372 (4500)	140
Above 1067 (3500) To 1220 (4000)	150
Above 915 (3000) To 1067 (3500)	200
Above 763 (2500) To 915 (3000)	280
Above 610 (2000) To 763 (2500)	400
Above 458 (1500) To 610 (2000)	700
Above 305 (1000) To 458 (1500)	1200
Up to 305 (1000)	2000

(b) For base and fixed stations operating in the 758–768 MHz band in accordance with the provisions of paragraph (a)(5) of this section, the power flux density that would be produced by such stations through a combination of antenna height and vertical gain pattern must not exceed 3000 microwatts per square meter on the ground over the area extending to 1 km from the base of the antenna mounting structure.

■ 26. Section 90.543 is amended by revising the introductory paragraph and revising paragraphs (e) and (f) to read as follows:

§ 90.543 Emission limitations.

Transmitters designed to operate in 769–775 MHz and 799–805 MHz frequency bands must meet the emission limitations in paragraphs (a) through (d) of this section. Transmitters operating in 758–768 MHz and 788–798 MHz bands must meet the emission limitations in (e) of this section.

* * * * *

(e) For operations in the 758–768 MHz and the 788–798 MHz bands, the power of any emission outside the licensee's frequency band(s) of operation shall be attenuated below the transmitter power (P) within the licensed band(s) of operation, measured in watts, in accordance with the following:

* * * * *.

(f) For operations in the 758–775 MHz and 788–805 MHz bands, all emissions including harmonics in the band 1559–1610 MHz shall be limited to –70 dBW/MHz equivalent isotropically radiated power (EIRP) for wideband signals, and –80 dBW EIRP for discrete emissions of less than 700 Hz bandwidth. For the purpose of equipment authorization, a transmitter shall be tested with an antenna that is representative of the type that will be used with the equipment in normal operation.

* * * * *

■ 27. Section 90.549 is revised to read as follows:

§ 90.549 Transmitter certification.

Transmitters operated in the 758–775 MHz and 788–805 MHz frequency bands must be of a type that have been authorized by the Commission under its certification procedure as required by § 90.203.

■ 28. Section 90.555 is amended by revising paragraph (a) introductory text, and revising paragraphs (b)(1) and (2) and paragraph (c) to read as follows:

§ 90.555 Information exchange.

(a) *Prior notification.* Public safety licensees authorized to operate in the 758–775 MHz and 788–805 MHz bands may notify any licensee authorized to operate in the 746–757 MHz or 776–787 MHz bands that they wish to receive prior notification of the activation or modification of the licensee's base or fixed stations in their area. Thereafter, the 746–757 MHz or 776–787 MHz band licensee must provide the following information to the public safety licensee at least 10 business days before a new base or fixed station is activated or an existing base or fixed station is modified:

* * * * *

(b) * * *

(1) Allow a public safety licensee to advise the 746–757 or 776–787 MHz band licensee whether it believes a proposed base or fixed station will generate unacceptable interference;

(2) Permit 746–757 and 776–787 MHz band licensees to make voluntary changes in base or fixed station parameters when a public safety licensee alerts them to possible interference; and,

* * * * *

(c) *Public Safety Information Exchange.* (1) Upon request by a 746–757 or 776–787 MHz band licensee, public safety licensees authorized to operate radio systems in the 758–775 and 788–805 MHz bands shall provide the operating parameters of their radio system to the 746–757 or 776–787 MHz band licensee.

(2) Public safety licensees who perform the information exchange described in this section must notify the appropriate 746–757 or 776–787 MHz band licensees prior to any technical changes to their radio system.

[FR Doc. 2013–08811 Filed 4–23–13; 8:45 am]

BILLING CODE 6712–01–P

FEDERAL COMMUNICATIONS COMMISSION

47 CFR Part 54

[WC Docket No. 02–60; Report No. 2974]

Petition for Reconsideration of Action in a Rulemaking Proceeding

AGENCY: Federal Communications Commission.

ACTION: Petition for reconsideration.

SUMMARY: In this document, a Petition for Reconsideration and Clarification (Petition) has been filed in the Commission's rulemaking proceeding by Kevin Rupy on behalf of United States Telecom Association.

DATES: Oppositions to the Petition must be filed on or before May 9, 2013. Replies to an opposition must be filed on or before May 20, 2013.

ADDRESSES: Federal Communications Commission, 445 12th Street SW., Washington, DC 20554.

FOR FURTHER INFORMATION CONTACT: Linda Oliver, Wireline Competition Bureau, at (202) 418–1732 or TTY (202) 418–0484.

SUPPLEMENTARY INFORMATION: This is a summary of Commission's document, Report No. 2974, released April 17, 2013. The full text of Report No. 2974 is available for viewing and copying in Room CY–B402, 445 12th Street SW., Washington, DC or may be purchased from the Commission's copy contractor, Best Copy and Printing, Inc. (BCPI) (1 (800) 378–3160). The Commission will not send a copy of this *Notice* pursuant to the Congressional Review Act, 5 U.S.C. 801(a)(1)(A), because this *Notice* does not have an impact on any rules of particular applicability.

Subject: Rural Health Care Support Mechanism, Petition for Reconsideration and Clarification of the United States Telecom Association, published at 78 FR 13936, March 1, 2013 in WC Docket No. 02–60, and published pursuant to 47 CFR 1.429(e). *See also* 1.4(b)(1) of the Commission's rules.

Number of Petitions Filed: 1.

Federal Communications Commission.

Gloria J. Miles,

Federal Register Liaison, Office of the Secretary, Office of Managing Director.

[FR Doc. 2013–09601 Filed 4–23–13; 8:45 am]

BILLING CODE 6712–01–P

DEPARTMENT OF COMMERCE

National Oceanic and Atmospheric Administration

50 CFR Part 635

RIN 0648–BD22

Atlantic Highly Migratory Species; Atlantic Shark Management Measures

AGENCY: National Marine Fisheries Service (NMFS), National Oceanic and Atmospheric Administration (NOAA), Commerce.

ACTION: Notice of Intent (NOI) to prepare an Environmental Impact Statement (EIS); request for comments.

SUMMARY: On October 7, 2011, we published an NOI to prepare an EIS for Amendment 5 to the 2006 Consolidated Highly Migratory Species (HMS) Fishery Management Plan (FMP) to address the results of recent shark stock assessments for several shark species, including dusky sharks. In that notice, based on the 2010/2011 Southeast Data, Assessment and Review (SEDAR) assessments for sandbar, dusky, and blacknose sharks, we declared that the status of the dusky shark stock is still overfished and still experiencing overfishing (i.e., their stock status has not changed). On November 26, 2012, we published a proposed rule for draft Amendment 5 to the 2006 Consolidated HMS FMP. After fully considering the public comments received on draft Amendment 5 and its proposed rule, we decided that further analysis and consideration of management approaches, data sources, and available information are needed for dusky sharks beyond those considered in the proposed rule. Thus, we announce our intent to prepare a separate EIS under the National Environmental Policy Act (NEPA) to conduct further analyses and explore management options specific to rebuilding and ending overfishing of dusky sharks. This EIS would assess the potential effects on the human environment of action to rebuild and end overfishing of the dusky shark stock, consistent with the Magnuson-Stevens Fishery Conservation and Management Act (Magnuson-Stevens Act). Through the rulemaking process, we would amend the 2006 Consolidated HMS FMP and examine management alternatives available to rebuild dusky sharks and end overfishing, as necessary.

DATES: Comments must be received no later than 5 p.m., local time, on May 24, 2013.

ADDRESSES: You may submit comments on this document, identified by NOAA–NMFS–2013–0070, by any of the following methods:

- *Electronic Submission:* Submit all electronic public comments via the Federal e-Rulemaking Portal. Go to *www.regulations.gov/#!docketDetail;D=[NOAA–NMFS–2013–0070]*, click the ''Comment Now!'' icon, complete the required fields, and enter or attach your comments.
- *Mail:* Submit written comments to Highly Migratory Species Management Division, NMFS Office of Sustainable Fisheries, 1315 East-West Highway, Silver Spring, MD 20910. Please mark on the outside of the envelope ''Comments on Amendment 5b NOI to the HMS FMP.''
- *Fax:* 301–713–1917; Attn: Peter Cooper.

Instructions: Comments sent by any other method, to any other address or individual, or received after the end of the comment period, may not be considered by NMFS. All comments received are a part of the public record and generally will be posted for public viewing on *www.regulations.gov* without change. All personal identifying information (e.g., name, address, etc.), confidential business information, or otherwise sensitive information submitted voluntarily by the sender will be publicly accessible. Do not submit confidential business information, or otherwise sensitive or protected information. NMFS will accept anonymous comments (enter ''N/A'' in the required fields if you wish to remain anonymous). Attachments to electronic comments will be accepted in Microsoft Word, Excel, or Adobe PDF file formats only.

For a copy of the stock assessments,please contact Peter Cooper (301) 427–8503 or download them online at *http://www.nmfs.noaa.gov/sfa/hms/* or *http://www.sefsc.noaa.gov/sedar/Index.jsp*.

FOR FURTHER INFORMATION CONTACT: Karyl Brewster-Geisz or Peter Cooper at (301) 427–8503.

SUPPLEMENTARY INFORMATION: The Atlantic shark fisheries are managed under the authority of the Magnuson-Stevens Act, 16 U.S.C. 1801 *et seq.* Management of these species is described in the 2006 Consolidated HMS FMP and its amendments, which are implemented by regulations at 50 CFR part 635. Copies of the 2006 Consolidated HMS FMP and amendments are available from NMFS on request (see **FOR FURTHER INFORMATION CONTACT**).

On October 7, 2011 (76 FR 62331), we published an NOI that announced the stock status determinations for various sharks, including dusky sharks. In that notice, based on the 2010/2011 SEDAR assessments for sandbar, dusky, and blacknose sharks, we declared that the status of the dusky shark stock is still overfished and still experiencing overfishing (i.e., their stock status has not changed). In the notice, we also announced our intent to prepare an EIS to assess the potential effects on the human environment of action to rebuild and end overfishing on various species of sharks, including dusky sharks, consistent with the Magnuson-Stevens Act.

On November 26, 2012, we published a proposed rule (77 FR 70552) for draft Amendment 5 to the 2006 Consolidated HMS FMP based on several shark stock assessments that were completed from 2009 to 2012. As described in the proposed rule, we proposed measures that were designed to reduce fishing mortality and effort in order to rebuild various overfished Atlantic shark species, including dusky sharks, while ensuring that a limited sustainable shark fishery for certain species could be maintained consistent with our legal obligations and the 2006 Consolidated HMS FMP. The proposed measures included changing commercial quotas and species groups, establishing several new time/area closures, changing an existing time/area closure, increasing the recreational minimum size for sharks, and establishing recreational reporting for certain species of sharks.

The comment period for the proposed rule closed on February 12, 2013. After reviewing all of the comments received, we decided to conduct further analyses on measures pertaining to dusky sharks in an FMP amendment, EIS, and proposed rule separate from but related to the FMP amendment, EIS, and rule for the other species of sharks. Thus, we announce our intent to prepare a separate EIS under NEPA to conduct further analyses and explore management options specific to rebuilding and ending overfishing of dusky sharks. This EIS would assess the potential effects on the human environment of the process of rebuilding and ending overfishing of the dusky shark stock, consistent with the Magnuson-Stevens Act. Through the rulemaking process, we would amend the 2006 Consolidated HMS FMP and examine management alternatives available to rebuild dusky sharks and end overfishing, as necessary. Moving forward, the ongoing FMP amendment for the other species of sharks included in draft Amendment 5, specifically scalloped hammerhead, sandbar, blacknose, and Gulf of Mexico blacktip

sharks, will be called ''Amendment 5a.'' The FMP amendment for dusky sharks will be called ''Amendment 5b.''

In Amendment 5b, we will explore a variety of alternatives to rebuild dusky sharks. We will likely continue to consider alternatives similar to those considered in draft Amendment 5 while also considering the comments received on draft Amendment 5, and additional alternatives as appropriate. Some of the comments on the proposed rulemaking for Amendment 5 requested that we consider approaches to dusky shark fishery management significantly different from those we analyzed in the proposed rulemaking for Amendment 5. For example, draft Amendment 5 proposed to increase the recreational size limit for all sharks based on the dusky shark age at maturity and many recreational fishermen asked for specific exemptions to, or different approaches to allow landings of other sharks such as blacktip sharks or ''blue'' sharks such as shortfin mako or thresher sharks. As another example, pelagic longline fishermen asked us to consider closing areas based on depth or other characteristics that may better define dusky shark habitats or to implement gear restrictions, such as limiting gangions to 300-pound test monofilament or requiring smaller circle hooks that might reduce interactions or allow any caught dusky sharks to escape with minimal harm.

In addition, we received numerous comments on the proposed dusky shark measures regarding the data sources used and the analyses of these data. Many commenters stated that they believed that economic analyses of the time/area closures underestimated the potential impacts either because the analyses did not fully consider regional impacts and the effects on vessels that could not move to other fishing areas or because the analyses did not fully consider that the proposed closures would effectively close a much larger area due to Gulf Stream currents causing longlines to drift into the proposed closed areas. Commenters asked for new summaries of the data used and additional data analyses, including incorporating more observer data into the analysis of the alternatives. We plan to conduct additional analyses in the new EIS for Amendment 5b.

Addressing dusky shark management measures in a subsequent and separate rulemaking via Amendment 5b will allow us to fully consider and address public comments on those measures, to consider other measures beyond the scope of those proposed and analyzed in draft Amendment 5, and to conduct additional analyses based on the best scientific information available. Comments received on the dusky measures of the draft Amendment 5 will be considered during the development of the new rule and Amendment 5b.

Authority: 16 U.S.C. 1801 *et seq.*

Dated: April 18, 2013.

Kara Meckley,

Acting Deputy Director, Office of Sustainable Fisheries, National Marine Fisheries Service.

[FR Doc. 2013–09671 Filed 4–23–13; 8:45 am]

BILLING CODE 3510–22–P

Notices

Federal Register

Vol. 78, No. 79

Wednesday, April 24, 2013

This section of the FEDERAL REGISTER contains documents other than rules or proposed rules that are applicable to the public. Notices of hearings and investigations, committee meetings, agency decisions and rulings, delegations of authority, filing of petitions and applications and agency statements of organization and functions are examples of documents appearing in this section.

DEPARTMENT OF AGRICULTURE

Submission for OMB Review; Comment Request

April 18, 2013.

The Department of Agriculture has submitted the following information collection requirement(s) to OMB for review and clearance under the Paperwork Reduction Act of 1995, Public Law 104–13. Comments regarding (a) whether the collection of information is necessary for the proper performance of the functions of the agency, including whether the information will have practical utility; (b) the accuracy of the agency's estimate of burden including the validity of the methodology and assumptions used; (c) ways to enhance the quality, utility and clarity of the information to be collected; (d) ways to minimize the burden of the collection of information on those who are to respond, including through the use of appropriate automated, electronic, mechanical, or other technological collection techniques or other forms of information technology should be addressed to: Desk Officer for Agriculture, Office of Information and Regulatory Affairs, Office of Management and Budget (OMB), *OIRA_Submission@OMB.EOP.GOV* or fax (202) 395–5806 and to Departmental Clearance Office, USDA, OCIO, Mail Stop 7602, Washington, DC 20250–7602. Comments regarding these information collections are best assured of having their full effect if received within 30 days of this notification. Copies of the submission(s) may be obtained by calling (202) 720–8958.

An agency may not conduct or sponsor a collection of information unless the collection of information displays a currently valid OMB control number and the agency informs potential persons who are to respond to the collection of information that such persons are not required to respond to the collection of information unless it displays a currently valid OMB control number.

Food and Nutrition Service

Title: Supplemental Nutrition Assistance Program (SNAP) Employment and Training (E & T) Program Activity Report.

OMB Control Number: 0584–0339.

Summary of Collection: The Balanced Budget Act of 1997 (Pub. L. 105–33), enacted on August 5, 1997, modified the Employment and Training (E&T) Program so that States' efforts are now focused on a particular segment of the Supplemental Nutrition Assistance Program (SNAP) (*formerly known as the Food Stamp Program*) population—able-bodied adults without dependents (ABAWDs). Section 6(d) of the Food Stamp Act of 1977 and 7 CFR 273.7 require each SNAP household member who is not exempt shall be registered for employment by the State agency at the time of application and once every twelve months thereafter, as a condition of eligibility. This requirement pertains to non-exempt SNAP household member age 16 to 60. Each State agency must screen each work registrant to determine whether to refer the individual to its E&T Program. States' E&T Programs are federally funded through an annual E&T grant. Both the Food Stamp Act and regulations require States to file quarterly reports about their E&T Programs so that the Food and Nutrition Service (FNS) can monitor their performance.

Need and Use of the Information: FNS will collect quarterly reports about their E&T programs so that the Department can monitor State performance to ensure that the program is being efficiently and economically operated. Without the information FNS would be unable to make adjustments or allocate exemptions in accordance with the statute.

Description of Respondents: State, Local, or Tribal Government.

Number of Respondents: 53.

Frequency of Responses: Recordkeeping; Reporting: Quarterly; Annually.

Total Burden Hours: 21,890.

Food and Nutrition Service

Title: Generic Clearance to Conduct Formative Research.

OMB Control Number: 0584–0524.

Summary of Collection: This information collection is based on Section 19 of the Child Nutrition Act of 1966 (42 U.S.C. 1787) Section 5 of the Richard B. Russell National School Lunch Act (42 U.S.C. 1754) and Section 11(f) of the Food and Nutrition Act of 2008 (7 U.S.C. 2020). Diet has a significant impact on the health of citizens and is linked to four leading causes of disease, which can reduce the quality of life and cause premature death. While these diet-related problems, including obesity affect all Americans, they have a greater impact on the disadvantaged populations served by many FNS programs. One of FNS' goals includes improving the nutrition of children and low-income families by providing access to program benefits and nutrition education. The basis of FNS' approach rests on the philosophies that all health communications and social marketing activities must be science-based, theoretically grounded, audience-driven, and results-oriented. FNS will collect information through formative research methods that will include focus groups, interviews (dyad, triad, telephone, etc.), field-testing, curriculum, surveys and web-based information gathering tools.

Need and Use of the Information: FNS will collect information to provide formative input and feedback on how best to reach and motivate the targeted population. The collected information will provide input regarding the potential use of materials and products during both the developmental and testing stages. FNS will also collect information regarding effective nutrition education and outreach initiatives being implemented by State agencies that administer nutrition assistance programs to promote repetition of promising practice-based intervention.

Description of Respondents: Individuals or households; Not for-profit institutions; Farms; State, Local or Tribal Government.

Number of Respondents: 151,700.

Frequency of Responses: Reporting: On occasion.

Total Burden Hours: 58,405.

Ruth Brown,

Departmental Information Collection Clearance Officer.

[FR Doc. 2013–09571 Filed 4–23–13; 8:45 am]

BILLING CODE 3410–11–P

DEPARTMENT OF AGRICULTURE

Submission for OMB Review; Comment Request

April 18, 2013.

The Department of Agriculture has submitted the following information collection requirement(s) to OMB for review and clearance under the Paperwork Reduction Act of 1995, Public Law 104–13. Comments regarding (a) whether the collection of information is necessary for the proper performance of the functions of the agency, including whether the information will have practical utility; (b) the accuracy of the agency's estimate of burden including the validity of the methodology and assumptions used; (c) ways to enhance the quality, utility and clarity of the information to be collected; (d) ways to minimize the burden of the collection of information on those who are to respond, including through the use of appropriate automated, electronic, mechanical, or other technological collection techniques and other forms of information technology.

Comments regarding this information collection received by May 24, 2013 will be considered. Written comments should be addressed to: Desk Officer for Agriculture, Office of Information and Regulatory Affairs, Office of Management and Budget (OMB), New Executive Office Building, 725 - 17th Street NW., Washington, DC 20503. Commentors are encouraged to submit their comments to OMB via email to: *OIRA_Submission@OMB.EOP.GOV* or fax (202) 395–5806 and to Departmental Clearance Office, USDA, OCIO, Mail Stop 7602, Washington, DC 20250–7602. Copies of the submission(s) may be obtained by calling (202) 720–8681.

An agency may not conduct or sponsor a collection of information unless the collection of information displays a currently valid OMB control number and the agency informs potential persons who are to respond to the collection of information that such persons are not required to respond to the collection of information unless it displays a currently valid OMB control number.

Forest Service

Title: Bid for Advertised Timber.

OMB Control Number: 0596–0066.

Summary of Collection: Individuals, large and small businesses, and corporations who wish to purchase timber or forest products from the National Forest must enter into a timber sale contract or Forest product contract with the Forest Service (FS). Information must be collected by FS in order to ensure that: National Forest System timber is sold at not less than appraised value; bidders meet specific criteria when submitting a bid; and anti-trust violations do not occur during the bidding process. Several statutes, regulations, and polices impose requirements on the Government and purchasers in the bidding process. The FS will collect information using several forms.

Need and Use of the Information: FS will collect information to determine bid responsiveness. The sale officer will ensure: the bidder has signed the bid form; provided a tax identification number; completed the unit rate, weighted average, or total sale value bid; entered the bid guarantee amount, type, and ensure the bid guarantee is enclosed with the bid, the bidder has provided the required information concerning Small Business Administration size and Equal Opportunity compliance on previous sales. The Timber Sale Contracting Officers will use the information to complete the contract prior to award to the highest bidder. Failure to include the required information may result in the bid being declared non-responsive or the Contracting Officer may be unable to make an affirmative finding of purchaser responsibility and not able to award the contract.

Description of Respondents: Business or other for-profit; Individuals or households.

Number of Respondents: 1,455.

Frequency of Responses: Reporting: On occasion.

Total Burden Hours: 86,940.

Forest Service

Title: Land Exchanges.

OMB Control Number: 0596–0105.

Summary of Collection: Land exchanges are discretionary, voluntary real estate transactions between the Secretary of Agriculture (acting by and through the Forest Service) and a non-Federal exchange party (or parties). Land exchanges can be initiated by a non-Federal party (or parties), and agent of a landowners, a broker, a third party, or a non-Federal public agency. Each land exchange requires preparation of an *Agreement To Initiate,* as required by Title 36 Code of Federal Regulations (CFR), part 254, subpart C, section 254.4—Agreement to Initiate and Exchange. As the exchange proposal develops, the exchange parties may enter into a binding Exchange Agreement, pursuant to Title 36 CFR part 254, subpart A, section 254.14—Exchange Agreement.

Need and Use of the Information: The *Agreement To Initiate* document specifies the preliminary and on-biding intentions of the non-Federal land exchange party and the Forest Service in pursuing a land exchange. The *Agreement To Initiate* contains information such as the description of properties considered for exchange, an implementation schedule of action items, identification of the party responsible for each action item, and target dates for completion of action items.

The Exchange Agreement documents the conditions necessary to complete the exchange. It contains information identifying parties, description of lands and interests to be exchanged, identification of all reserved and outstanding interests, and all other terms and conditions that are necessary to complete the exchange.

Description of Respondents: Business or other for-profit; Individuals or households; State, Local or Tribal Government.

Number of Respondents: 23.

Frequency of Responses: Reporting: On occasion.

Total Burden Hours: 88.

Forest Service

Title: Secure Rural Schools Act.

OMB Control Number: 0596–0220.

Summary of Collection: The Secure Rural Schools and Community Self-Determination Act of 2000 (the Act) reauthorized in Public Law 110–343, requires the appropriate official of a county that receives funds under Title III of the Act to submit to the Secretary of Agriculture or the Secretary of the Interior, as appropriate, an annual certification that the funds have been expended for the uses authorized under section 302(a) of the Act. Participating counties will also report amounts not obligated by September 30 of the previous year. The information will be collected annually in the form of conventional correspondence such as a letter and, at the respondent's option, attached tables or similar graphic display. At the respondent's discretion, the information may be submitted by hard copy and/or electronically scanned and included as an attachment to electronic mail.

Need and Use of the Information: The information collected will identify the participating county and the year in which the expenditures were made and will include amounts not obligated by September 30 of the previous year. Information includes the name, title, and signature of the official certifying that the expenditures were for uses authorized under section 302(a) of the

Act, and the date of the certification. Information will also be collected including the amount of funds expended in the applicable year and the uses for which the amounts were expended referencing the authorized categories; (1) Carry out activities under the Firewise Communities program; (2) reimburse the participating county for emergency services performed on Federal land and paid for by the participating county; and (3) to develop community wildfire protection plans in coordination with the appropriate Secretary or designee. The information will be used to verify that participating counties have certified that funds were expended as authorized in the Act.

Description of Respondents: State, Local or Tribal Government.

Number of Respondents: 360.

Frequency of Responses: Reporting: Annually.

Total Burden Hours: 8,640.

Ruth Brown,

Departmental Information Collection Clearance Officer.

[FR Doc. 2013–09569 Filed 4–23–13; 8:45 am]

BILLING CODE 3410–11–P

DEPARTMENT OF AGRICULTURE

Submission for OMB Review; Comment Request

April 18, 2013.

The Department of Agriculture has submitted the following information collection requirement(s) to OMB for review and clearance under the Paperwork Reduction Act of 1995, Public Law 104–13. Comments regarding (a) whether the collection of information is necessary for the proper performance of the functions of the agency, including whether the information will have practical utility; (b) the accuracy of the agency's estimate of burden including the validity of the methodology and assumptions used; (c) ways to enhance the quality, utility and clarity of the information to be collected; (d) ways to minimize the burden of the collection of information on those who are to respond, including through the use of appropriate automated, electronic, mechanical, or other technological collection techniques or other forms of information technology should be addressed to: Desk Officer for Agriculture, Office of Information and Regulatory Affairs, Office of Management and Budget (OMB), *OIRA_Submission@OMB.EOP.GOV* or fax (202) 395–5806 and to Departmental Clearance Office, USDA, OCIO, Mail Stop 7602, Washington, DC 20250–7602. Comments regarding these information collections are best assured of having their full effect if received within 30 days of this notification. Copies of the submission(s) may be obtained by calling (202) 720–8958.

An agency may not conduct or sponsor a collection of information unless the collection of information displays a currently valid OMB control number and the agency informs potential persons who are to respond to the collection of information that such persons are not required to respond to the collection of information unless it displays a currently valid OMB control number.

Economic Research Service

Title: Rural Establishment Innovation Survey (REIS).

OMB Control Number: 0536–NEW.

Summary of Collection: The Economic Research Service (ERS) plans to conduct the Rural Establishment Innovation Survey (REIS) as a one-time inquiry. The proposed collection will contribute to a better understanding of how international competition and the increasing knowledge intensity of economic activity in the U.S. are affecting the vitality of rural areas and effective adjustment of these pressures. Data obtain from the survey will allow ERS to examine the prevalence of innovation activity in nonmetropolitan businesses and those establishment and community-level characteristics associated with innovation. Information will be collected using a multi-mode survey where respondents will be able to complete the survey via telephone interview or by either completing a questionnaire sent via mail or available electronically through a secure web link. The legal authority for collecting this information is the Rural Development Act of 1972 U.S.C. 2662(b).

Need and Use of the Information: The data collected through the survey will help fill serious gaps in ERS understanding of what rural establishments need to be competitive in the national and global economics and provide USDA and other policymakers with sound information so they can craft more effective rural development policies. The results will inform the degree to which human capital endowments; access to credit; access to infrastructure; and potentially more limited interaction with suppliers, customers, and peer firms impedes processes of rural innovation. Failure to collect this information will severely limit the evidentiary basis for improving the innovative capacity of business establishments located in less favorable areas.

Description of Respondents: Business or other for-profit; Not-for-profit institutions.

Number of Respondents: 34,000.

Frequency of Responses: Reporting: On occasion.

Total Burden Hours: 15,369.

Ruth Brown,

Departmental Information Collection Clearance Officer.

[FR Doc. 2013–09570 Filed 4–23–13; 8:45 am]

BILLING CODE 3410–18–P

DEPARTMENT OF AGRICULTURE

Agricultural Marketing Service

[Doc. No. AMS–FV–13–0025]

Softwood Lumber Research, Promotion, Consumer Education and Industry Information Order; Request for Extension and Revision of a Currently Approved Information Collection

AGENCY: Agricultural Marketing Service, USDA.

ACTION: Notice and request for comments.

SUMMARY: In accordance with the Paperwork Reduction Act of 1995 (44 U.S.C. Chapter 35), this document announces the Agricultural Marketing Service's (AMS) intention to request approval from the Office of Management and Budget (OMB), for an extension of and revision to the currently approved information collection Softwood Lumber Research, Promotion, Consumer Education and Industry Information Order (Order).

DATES: Comments must be received by June 24, 2013.

ADDRESSES: Interested persons are invited to submit comments concerning this notice. Comments should be submitted online at *www.regulations.gov* or sent to the Promotion and Economics Division, Fruit and Vegetable Program, AMS, U.S. Department of Agriculture (USDA), 1400 Independence Avenue SW., Stop 0244, Room 1406–S, Washington, DC 20250–0244, or by facsimile to (202) 205–2800. All comments should reference the document number, the date and the page number of this issue of the **Federal Register**. All comments received will be posted without change, including any personal information provided, online at *http://www.regulations.gov* and will be made available for public inspection at the above physical address during regular business hours.

FOR FURTHER INFORMATION CONTACT: Marlene Betts at the above address, by telephone at (202) 720–9915, or by email at *marlene.betts@ams.usda.gov*.

SUPPLEMENTARY INFORMATION:

Title: Softwood Lumber Research, Promotion, Consumer Education and Industry Information Order.

OMB Number: 0581–0264.

Expiration Date of Approval: November 30, 2013.

Type of Request: Extension and revision of a currently approved information collection.

Abstract: The Order was created in 2011 to help strengthen the position of softwood lumber in the marketplace, maintain and expand markets for softwood lumber, and develop new uses for softwood lumber within the United States. Softwood lumber is used in products like flooring, siding and framing. The Order is authorized under the Commodity Promotion, Research, and Information Act of 1996 (1996 Act) (7 U.S.C. 7411–7425).

The program is administered by the Softwood Lumber Board (Board) appointed by the Secretary of Agriculture and financed by a mandatory assessment on domestic manufacturers and importers. The assessment rate is $0.35 per thousand board feet of softwood lumber shipped within or imported to the United States. Entities that domestically manufacture and ship or import less than 15 million board feet per fiscal year are exempt from the payment of assessments. Additionally, assessed entities do not pay assessments on the first 15 million board feet of softwood lumber shipped domestically or imported during the year. Exports from the United States are also exempt from assessments.

The information collection requirements in the request are essential to carry out the intent of the Order. The objective in carrying out this responsibility includes assuring the following: (1) Funds are collected and properly accounted for; (2) expenditures of all funds are for the purposes authorized by the 1996 Act and Order; and (3) the Board's administration of the programs conforms to USDA policy.

The Order's provisions have been carefully reviewed, and every effort has been made to minimize any unnecessary recordkeeping costs or requirements.

The forms covered under this collection require the minimum information necessary to effectively carry out the requirements of the program, and their use is necessary to fulfill the intent of the Order. Such information can be supplied without data processing equipment or outside technical expertise. In addition, there are no additional training requirements for individuals filling out reports and remitting assessments to the Board. The forms are simple, easy to understand, and place as small a burden as possible on the person required to file the information.

Collecting information quarterly coincides with normal industry business practices. The timing and frequency of collecting information are intended to meet the needs of the industry while minimizing the amount of work necessary to fill out the required reports. The requirement to keep records for two years beyond the fiscal period of their applicability is consistent with normal industry practices. In addition, the information to be included on these forms is not available from other sources because such information relates specifically to individual domestic manufacturers and importers who are subject to the provisions of the Order. Therefore, there is no practical method for collecting the required information without the use of these forms.

AMS is committed to complying with the E-Government Act, which requires Government agencies in general to provide the public the option of submitting information or transacting business electronically to the maximum extent possible.

Estimate of Burden: Public recordkeeping burden for this collection of information is estimated to average 0.416 hour per response.

Respondents: Domestic manufacturers and importers, whether subject to the Order or not.

Estimated Number of Respondents: 1,478.

Estimated Total Annual Responses: 4,495.

Estimated Number of Responses per Respondent: 3.04.

Estimated Total Annual Burden on Respondents: 1,871.

Comments are invited on: (1) Whether the proposed collection of information is necessary for the proper performance of functions of the agency, including whether the information will have practical utility; (2) the accuracy of the agency's estimate of burden of the proposed collection of information, including the validity of the methodology and assumptions used; (3) ways to enhance the quality, utility, and clarity of the information to be collected; and (4) ways to minimize the burden of the collection of information on those who are to respond, including the use of appropriate automated, electronic, mechanical, or other technological collection techniques or other forms of information technology.

All responses to this document will be summarized and included in the request for OMB approval. All comments will become a matter of public record.

Authority: 44 U.S.C. Chapter 35.

Dated: April 18, 2013.

Rex A. Barnes,

Acting Administrator.

[FR Doc. 2013–09727 Filed 4–23–13; 8:45 am]

BILLING CODE 3410–02–P

DEPARTMENT OF AGRICULTURE

Animal and Plant Health Inspection Service

[Docket No. APHIS–2012–0112]

Notice of Emergency Approval of an Information Collection; National Animal Health Monitoring System; Equine Herpesvirus Myeloencephalopathy Study

AGENCY: Animal and Plant Health Inspection Service, USDA.

ACTION: Emergency approval of an information collection; comment request.

SUMMARY: In accordance with the Paperwork Reduction Act of 1995, this notice announces that the Animal and Plant Health Inspection Service has requested and received emergency approval of an information collection for a National Animal Health Monitoring System Equine Herpesvirus Myeloencephalopathy Study to support the equine industry in the United States.

DATES: We will consider all comments that we receive on or before June 24, 2013.

ADDRESSES: You may submit comments by either of the following methods:

- *Federal eRulemaking Portal:* Go to *http://www.regulations.gov/#!documentDetail;D=APHIS-2012-0112-0001*.
- *Postal Mail/Commercial Delivery:* Send your comment to Docket No. APHIS–2012–0112, Regulatory Analysis and Development, PPD, APHIS, Station 3A–03.8, 4700 River Road Unit 118, Riverdale, MD 20737–1238.

Supporting documents and any comments we receive on this docket may be viewed at *http://www.regulations.gov/#!docketDetail;D=APHIS-2012-0112* or in our reading room, which is located in room 1141 of the USDA South Building, 14th Street and Independence Avenue SW., Washington, DC. Normal reading room hours are 8 a.m. to 4:30 p.m.,

Monday through Friday, except holidays. To be sure someone is there to help you, please call (202) 799–7039 before coming.

FOR FURTHER INFORMATION CONTACT: For information on the Equine Herpesvirus Myeloencephalopathy Study, contact Mr. Chris Quatrano, Industry Analyst, Centers for Epidemiology and Animal Health, VS, APHIS, 2150 Centre Avenue, Building B MS 2E6, Fort Collins, CO 80526; (970) 494–7207. For copies of more detailed information on the information collection, contact Mrs. Celeste Sickles, APHIS' Information Collection Coordinator, at (301) 851–2908.

SUPPLEMENTARY INFORMATION:

Title: National Animal Health Monitoring System; Equine Herpesvirus Myeloencephalopathy Study.

OMB Number: 0579–0399.

Type of Request: Continuation of an emergency approval of an information collection.

Abstract: Under the Animal Health Protection Act (7 U.S.C. 8301 *et seq.*), the Animal and Plant Health Inspection Service (APHIS) of the U.S. Department of Agriculture (USDA) is authorized, among other things, to protect the health of U.S. livestock and poultry populations by preventing the introduction and interstate spread of serious diseases and pests of livestock and for eradicating such diseases from the United States when feasible. In connection with this mission, APHIS operates the National Animal Health Monitoring System (NAHMS), which collects nationally representative, statistically valid, and scientifically sound data on the prevalence and economic importance of livestock diseases and associated risk factors.

NAHMS' epidemiologic investigations are a collaborative industry and government initiative to help determine the most effective means of preventing and controlling livestock disease outbreaks. APHIS is the only agency responsible for collecting data on livestock health. Participation in any NAHMS study is voluntary, and all data are confidential.

APHIS is conducting an Equine Herpesvirus Myeloencephalopathy (EHM) Study as part of an ongoing series of NAHMS studies on the U.S. livestock population. The purpose of this study is to collect information using questionnaires, during equine herpesvirus (EHV–1) outbreaks, to identify risk factors for EHM. EHM is the neurologic form of EHV–1 in horses. Infection with EHV–1 can result in respiratory disease, abortion in mares, neonatal foal death, and neurologic disease. The virus can spread in many ways, such as through direct horse-to-horse contact, through the air in equine environments, and by contact with contaminated equipment, clothing, and hands. EHM is endemic to the United States, and outbreaks are usually handled by affected States. However, APHIS becomes involved in cases that involve multiple States or the interstate movement of horses.

Due to recent outbreaks of EHV–1 in the United States, APHIS has initiated the study earlier than expected. State animal health officials are currently administering questionnaires, in person or by telephone, to horse owners and trainers of horses infected with EHV–1 that include cases of EHM and horses that are not affected to serve as case controls. The information collected is being used to understand the risk factors for EHM, make recommendations for disease control, and to allow us to provide guidance on the best ways to avoid future outbreaks based on a thorough analysis and interpretation of the data.

The Office of Management and Budget (OMB) has approved our use of these information collection activities on an emergency basis. We plan to request continuation of that approval for 3 years.

The purpose of this notice is to solicit comments from the public (as well as affected agencies) concerning our information collection. These comments will help us:

(1) Evaluate whether the collection of information is necessary for the proper performance of the functions of the Agency, including whether the information will have practical utility;

(2) Evaluate the accuracy of our estimate of the burden of the collection of information, including the validity of the methodology and assumptions used;

(3) Enhance the quality, utility, and clarity of the information to be collected; and

(4) Minimize the burden of the collection of information on those who are to respond, through use, as appropriate, of automated, electronic, mechanical, and other collection technologies; e.g., permitting electronic submission of responses.

Estimate of burden: The public reporting burden for this collection of information is estimated to average 0.79226 hours per response.

Respondents: Horse owners and/or trainers and State animal health officials.

Estimated annual number of respondents: 626.

Estimated annual number of responses per respondent: 1.57.

Estimated annual number of responses: 982.

Estimated total annual burden on respondents: 778 hours. (Due to averaging, the total annual burden hours may not equal the product of the annual number of responses multiplied by the reporting burden per response.)

All responses to this notice will be summarized and included in the request for OMB approval. All comments will also become a matter of public record.

Done in Washington, DC, this 18th day of April 2013.

Kevin Shea,

Acting Administrator, Animal and Plant Health Inspection Service.

[FR Doc. 2013–09736 Filed 4–23–13; 8:45 am]

BILLING CODE 3410–34–P

DEPARTMENT OF AGRICULTURE

Animal and Plant Health Inspection Service

[Docket No. APHIS–2012–0105]

Notice of Availability of a National Animal Health Laboratory Network Reorganization Concept Paper

AGENCY: Animal and Plant Health Inspection Service, USDA.

ACTION: Notice of availability and request for comments.

SUMMARY: We are advising the public that the Animal and Plant Health Inspection Service is making available a concept paper that describes a revised structure for the National Animal Health Laboratory Network (NAHLN) for public review and comment. The NAHLN is a nationally coordinated network and partnership of Federal, State, and university-associated animal health laboratories working to protect animal and public health and the nation's food supply by providing diagnostic testing aimed at detecting biological threats to the nation's food animals. The concept paper we are making available for comment presents a structure we believe will give the NAHLN increased capacity and flexibility to detect and respond to emerging and zoonotic diseases.

DATES: We will consider all comments that we receive on or before June 24, 2013.

ADDRESSES: You may submit comments by either of the following methods:

- *Federal eRulemaking Portal:* Go to *http://www.regulations.gov/#!documentDetail;D=APHIS-2012-0105-0001.*
- *Postal Mail/Commercial Delivery:* Send your comment to Docket No.

APHIS–2012–0105, Regulatory Analysis and Development, PPD, APHIS, Station 3A–03.8, 4700 River Road Unit 118, Riverdale, MD 20737–1238.

Supporting documents and any comments we receive on this docket may be viewed at *http://www.regulations.gov/#!docketDetail;D=APHIS-2012-0105* or in our reading room, which is located in Room 1141 of the USDA South Building, 14th Street and Independence Avenue SW., Washington, DC. Normal reading room hours are 8 a.m. to 4:30 p.m., Monday through Friday, except holidays. To be sure someone is there to help you, please call (202) 799–7039 before coming.

FOR FURTHER INFORMATION CONTACT: Dr. Sarah Tomlinson, Associate Coordinator, National Animal Health Laboratory Network, Veterinary Services, APHIS, 2140 Centre Avenue, Building B, Fort Collins, CO 80526; (970) 494–7152.

SUPPLEMENTARY INFORMATION:

Background

The National Animal Health Laboratory Network (NAHLN) is a nationally coordinated network and partnership of Federal, State, and university-associated animal health laboratories working to protect animal and public health and the nation's food supply by providing diagnostic testing aimed at detecting biological threats to the nation's food animals. Participating NAHLN laboratories are currently designated as Core, Member, Contract, or Adjunct laboratories, depending on their testing capacities, geographical distribution, and degree of specialization. Oversight and administration of the NAHLN is provided by the United States Department of Agriculture (USDA) through the Animal and Plant Health Inspection Service (APHIS). Input and leadership is provided to the NAHLN by a Coordinating Council composed of USDA and State regulatory animal health officials and State employee representatives of NAHLN laboratories.

Since its inception in 2002, the NAHLN has expanded from 12 to over 50 current active participating laboratories, each with varying diagnostic capacities. The need and available technology for diagnostic testing has also changed. Stakeholder feedback indicates that the NAHLN's structure also needs to change in order to expand detection of emerging and zoonotic diseases. To address stakeholder feedback, APHIS is considering certain elements that we believe will ensure continuation of the NAHLN's founding principles while responding to the need for additional flexibility and capacity to address identified gaps in the nation's surveillance, detection, and response capabilities.

The concept paper describes the roles and responsibilities of the NAHLN Coordinating Council and offers a revised structure for the NAHLN that would clarify opportunities for participation by State-based NAHLN laboratories. Inclusion of State-based laboratories in the NAHLN allows for greater proximity to and linkages with producers and veterinarians, which is critical to early detection of foreign animal and emerging diseases. Possible criteria and designations for various levels of participation, including participation by private laboratories, are set forth in the concept paper. Instead of using Core, Member, Contract, or Adjunct laboratory designations, participating laboratories would be designated as Level 1, 2, or 3, Affiliate Laboratory, or Specialty Laboratory, depending on the criteria met by each participating laboratory. To maintain designation, qualifying laboratories would undergo annual reviews to demonstrate adherence to established NAHLN policies and procedures.

APHIS will consider all comments received on the concept paper in determining the appropriate structure and governance for the NAHLN. The concept paper for the revised structure of the NAHLN may be viewed on the Regulations.gov Web site or in our reading room (see **ADDRESSES** above for a link to Regulations.gov and information on the location and hours of the reading room). You may request paper copies of the document by calling or writing to the person listed under **FOR FURTHER INFORMATION CONTACT**. Please refer to the title of this document when requesting copies.

Done in Washington, DC, this 18th day of April 2013.

Kevin Shea,

Acting Administrator, Animal and Plant Health Inspection Service.

[FR Doc. 2013–09733 Filed 4–23–13; 8:45 am]

BILLING CODE 3410–34–P

DEPARTMENT OF AGRICULTURE

Animal and Plant Health Inspection Service

[Docket No. APHIS–2013–0017]

Notice of Availability of a Pest Risk Analysis for Interstate Movement of Sapote Fruit From Puerto Rico Into the Continental United States

AGENCY: Animal and Plant Health Inspection Service, USDA.

ACTION: Notice of availability.

SUMMARY: We are advising the public that we have prepared a pest risk analysis that evaluates the risks associated with the interstate movement into the continental United States of fresh sapote fruit from Puerto Rico. Based on that analysis, we believe that the application of one or more designated phytosanitary measures will be sufficient to mitigate the risks of introducing or disseminating plant pests or noxious weeds via the interstate movement of sapote fruit from Puerto Rico. We are making the pest risk analysis available to the public for review and comment.

DATES: We will consider all comments that we receive on or before June 24, 2013.

ADDRESSES: You may submit comments by either of the following methods:

- *Federal eRulemaking Portal:* Go to *http://www.regulations.gov/#!documentDetail;D=APHIS-2013-0017-0001*.
- *Postal Mail/Commercial Delivery:* Send your comment to Docket No. APHIS–2013–0017, Regulatory Analysis and Development, PPD, APHIS, Station 3A–03.8, 4700 River Road Unit 118, Riverdale, MD 20737–1238.

Supporting documents and any comments we receive on this docket may be viewed at *http://www.regulations.gov/#!docketDetail;D=APHIS-2013-0017* or in our reading room, which is located in room 1141 of the USDA South Building, 14th Street and Independence Avenue SW., Washington, DC. Normal reading room hours are 8 a.m. to 4:30 p.m., Monday through Friday, except holidays. To be sure someone is there to help you, please call (202) 799–7039 before coming.

FOR FURTHER INFORMATION CONTACT: Mr. David Lamb, Regulatory Policy Specialist, PPQ, APHIS, 4700 River Road Unit 133, Riverdale, MD 20737–1231; (301) 851–2103.

SUPPLEMENTARY INFORMATION:

Background

Under the regulations in ''Subpart—Regulated Articles From Hawaii and the Territories'' (7 CFR 318.13–1 through 318.13–26, referred to below as the regulations), the Animal and Plant Health Inspection Service (APHIS) of the U.S. Department of Agriculture prohibits or restricts the interstate movement of fruits and vegetables into the continental United States from Hawaii, Puerto Rico, the U.S. Virgin Islands, Guam, and the Commonwealth of the Northern Mariana Islands to prevent plant pests and noxious weeds from being introduced into and spread within the continental United States. (The continental United States is defined in § 318.13–2 of the regulations as the 48 contiguous States, Alaska, and the District of Columbia.)

Section 318.13–4 contains a performance-based process for approving the interstate movement of commodities that, based on the findings of a pest risk analysis, can be safely moved subject to one or more of the designated phytosanitary measures listed in paragraph (b) of that section.

APHIS received a request from tropical fruit growers in Puerto Rico to allow the interstate movement of fresh sapote fruit (*Pouteria sapota*) from Puerto Rico to the continental United States. We have completed a pest risk assessment to identify pests of quarantine significance that could follow the pathway of interstate movement into the continental United States and, based on that pest risk assessment, have prepared a risk management document to identify phytosanitary measures that could be applied to the commodity to mitigate the pest risk. We have concluded that sapote fruit can be safely moved from Puerto Rico to the continental United States using one or more of the six designated phytosanitary measures listed in § 318.13–4(b). The measures under which sapote fruit may be moved from Puerto Rico to the continental United States are:

- Inspection in Puerto Rico; and
- Movement of the sapote fruit as commercial consignments only.

Therefore, in accordance with § 318.13–4(c), we are announcing the availability of our pest risk assessment and risk management document for public review and comment. The documents may be viewed on the Regulations.gov Web site or in our reading room (see **ADDRESSES** above for instructions for accessing Regulations.gov and information on the location and hours of the reading room). You may request paper copies of the pest risk analysis by calling or writing to the person listed under **FOR FURTHER INFORMATION CONTACT**. Please refer to the subject of the pest risk analysis when requesting copies.

After reviewing the comments we receive, we will announce our decision regarding the interstate movement of sapote fruit from Puerto Rico to the continental United States in a subsequent notice. If the overall conclusions of the analysis and the Administrator's determination of risk remain unchanged following our consideration of the comments, then we will begin allowing the interstate movement of sapote fruit from Puerto Rico to the continental United States subject to the requirements specified in the risk management document.

Authority: 7 U.S.C. 7701–7772 and 7781–7786; 7 CFR 2.22, 2.80, and 371.3.

Done in Washington, DC, this 18th day of April 2013.

Kevin Shea,

Acting Administrator, Animal and Plant Health Inspection Service.

[FR Doc. 2013–09735 Filed 4–23–13; 8:45 am]

BILLING CODE 3410–34–P

DEPARTMENT OF AGRICULTURE

Rural Utilities Service

Information Collection Activity; Comment Request

AGENCY: Rural Utilities Service, USDA.

ACTION: Notice and request for comments.

SUMMARY: In accordance with the Paperwork Reduction Act of 1995 (44 U.S.C. Chapter 35, as amended), the Rural Utilities Service, an agency of the United States Department of Agriculture's (USDA), invites comments on this information collection for which the Agency intends to request approval from the Office of Management and Budget (OMB).

DATES: Comments on this notice must be received by June 24, 2013.

FOR FURTHER INFORMATION CONTACT: Michele L. Brooks, Director, Program Development and Regulatory Analysis, Rural Utilities Service, 1400 Independence Ave. SW., STOP 1522, Room 5162 South Building, Washington, DC 20250–1522. Telephone: (202) 690–1078, FAX: (202) 720–4120. Email: *Michele.brooks@wdc.usda.gov*.

SUPPLEMENTARY INFORMATION: The Office of Management and Budget's (OMB) regulation (5 CFR 1320) implementing provisions of the Paperwork Reduction Act of 1995 (Pub. L. 104–13) requires that interested members of the public and affected agencies have an opportunity to comment on information collection and recordkeeping activities (see 5 CFR 1320.8(d)). This notice identifies an information collection that the Agency is submitting to OMB for revision.

Comments are invited on (a) whether the collection of information is necessary for the proper performance of the functions of the agency, including whether the information will have practical utility; (b) the accuracy of the agency's estimate of burden including the validity of the methodology and assumption used; (c) ways to enhance the quality, utility, and clarity of the information to be collected; and (d) ways to minimize the burden of the collection of information on those who are to respond, including through the use of appropriate automated, electronic, mechanical, or other technological collection techniques on other forms and information technology. Comments may be sent to Michele L. Brooks, Director, Program Development and Regulatory Analysis, Rural Utilities Service, 1400 Independence Ave. SW., STOP 1522, Room 5162 South Building, Washington, DC 20250–1522. Telephone: (202) 690–1078, FAX: (202) 720–4120, Email: *Michele.brooks@wdc.usda.gov.*

Title: Special Evaluation Assistance for Rural Communities and Household Program (SEARCH).

OMB Control Number: 0572–0146.

Type of Request: Revision of currently approved package.

Abstract: The Food, Conservation and Energy Act of 2008, Public Law 110–246 (Farm Bill) amended Section 306(a)(2) of the Consolidated Farm and Rural Development Act (CONACT) (7 U.S.C. 1926(a)(2)). The amendment created a grant program to make Special Evaluation Assistance for Rural Communities and Households (SEARCH) Program grants.

Under the SEARCH program, the Secretary may make predevelopment and planning grants to public or quasi-public agencies, organizations operated on a not-for-profit basis or Indian tribes on Federal and State reservations and other federally recognized Indian tribes. The grant recipients shall use the grant funds for feasibility studies, design assistance, and development of an application for financial assistance to financially distressed communities in rural areas with populations of 2,500 or fewer inhabitants for water and waste disposal projects as authorized in Sections 306(a)(1), 306(a)(2) and 306(a)(24) of the CONACT.

Estimate of Burden: Public reporting burden for this collection of information is estimated to average 2 hours per responses.

Estimated Number of Respondents: 25.

Estimated Number of Total Annual Responses per Respondents: 310.

Estimated Total Annual Burden on Respondents: 635.

Copies of this information collection can be obtained from MaryPat Daskal, Program Development and Regulatory Analysis, Rural Utilities Service, 1400 Independence Ave. SW., STOP 1522, Room 5162 South Building, Washington, DC 20250–1522. Telephone: (202) 720–7853, FAX: (202) 720–4120, Email: *MaryPat.Daskal@wdc.usda.gov*.

All responses to this information collection and recordkeeping notice will be summarized and included in the request for OMB approval. All comments will also become a matter of public record.

Dated: April 16, 2013.

John Charles Padalino,

Acting Administrator, Rural Utilities Service.

[FR Doc. 2013–09567 Filed 4–23–13; 8:45 am]

BILLING CODE P

DEPARTMENT OF COMMERCE

Foreign-Trade Zones Board

[B–34–2013]

Foreign-Trade Zone 20—Suffolk, Virginia; Application for Reorganization and Expansion Under the Alternative Site Framework

An application has been submitted to the Foreign-Trade Zones (FTZ) Board (the Board) by the Virginia Port Authority, grantee of FTZ 20, requesting authority to reorganize and expand the zone under the alternative site framework (ASF) adopted by the FTZ Board (15 CFR 400.2(c)). The ASF is an option for grantees for the establishment or reorganization of zones and can permit significantly greater flexibility in the designation of new ''subzone/usage-driven'' FTZ sites for operators/users located within a grantee's ''service area'' in the context of the Board's standard 2,000-acre activation limit for a zone. The application was submitted pursuant to the Foreign-Trade Zones Act, as amended (19 U.S.C. 81a-81u), and the regulations of the Board (15 CFR part 400). It was formally filed on April 18, 2013.

FTZ 20 was approved by the Board on April 15, 1975 (Board Order 105, 40 FR 17884, 4/23/75); relocated on January 17, 1977 (Board Order 114, 42 FR 4187, 1/24/77), and on March 16, 1981 (Board Order 173, 46 FR 18063, 3/23/81); and, expanded on May 8, 1997 (Board Order 887, 62 FR 28446, 5/23/97), on July 28, 2000 (Board Order 1113, 65 FR 50179, 8/17/00), on April 5, 2001 (Board Order 1163, 66 FR 20235, 4/20/01), and on May 21, 2010 (Board Order 1683, 75 FR 30782–30783, 6/2/10).

The current zone includes the following sites: *Site 1* (22 acres)—Kerma Medical Products, 215 Suburban Drive, Suffolk; *Site 2* (10 acres)—Evans Distribution Systems, 324 Moore Avenue, Suffolk; *Site 3* (72.3 acres total)—Givens, Inc., 1720 S. Military Highway, Chesapeake; *Site 4* (905 acres)—Norfolk International Terminals, 7737 Hampton Boulevard, Norfolk; *Site 5* (242 acres)—Portsmouth Marine Terminal, 2000 Seaboard Avenue, Portsmouth; *Site 6* (184 acres)—Newport News Marine Terminal, 25th and Warwick Boulevard, Newport News; *Site 7* (490 acres)—Warren County Industrial Corridor, Routes 340, 522 and 661, Front Royal; *Site 8* (133 acres)—Bridgeway Commerce Park, Interstate 664, Suffolk; *Site 9* (689 acres)—Cavalier Industrial Park, Interstate 64 and U.S. Route 12, Chesapeake; *Site 10* (26 acres)—D.D. Jones Transfer & Warehouse, Inc., 1920 Campostella Road, Chesapeake; *Site 11* (177 acres)—New Boone Farm Industrial Park, Interstate 664, Chesapeake; *Site 12* (60 acres)—Port Centre Commerce Park, I–264, Portsmouth; *Site 13* (139 acres)—Suffolk Industrial Park, 595 Carolina Road, Suffolk; *Site 14* (6187 acres)—Goddard Space Flight Center, Wallops Flight Facility, Wallops Island; *Site 15* (449 acres)—Accomack Airport Industrial Park, U.S. Highway 13 and Parkway Road, Melfa; *Site 16* (5 acres)—Battlefield Lakes Technical Center, 525 & 533 Byron Street, Chesapeake; *Site 17* (4 acres)—Butts Station Commerce Center, 600, 604 & 608 Greentree Road, Chesapeake; *Site 18* (130 acres)—Port of Cape Charles Sustainable Technologies Industrial Park, U.S. 13 on SR 1108, Cape Charles; *Site 19* (323 acres)—Shirley T. Holland Commerce Park, 25400 Old Mill Road, Windsor; *Site 21* (85 acres)—Virginia Regional Commerce Park, 2930 Pruden Boulevard, Suffolk; *Site 22* (18 acres)—Port Norfolk Holdings Warehouse, 1157 Production Road, Norfolk; *Site 23* (101 acres)—Virginia Commerce Center, 351 Kenyon Road, Suffolk; *Site 24* (219 acres)—Westport Commerce Center, Manning Bridge Road, Suffolk; *Site 25* (13 acres)—Cargoways Ocean Services, Inc., 631 Carolina Road, Suffolk; *Site 32* (7 acres)—PATCO Industries Inc., 1357 Taylor Farm Road, Virginia Beach (expires 10/31/13); and, *Site 33* (5 acres)—PATCO Industries, Inc., 2873 Crusader Circle, Virginia Beach (expires 10/31/13). (Sites 1–18 and 25 are subject to a sunset provision of May 31, 2013 and Sites 19 and 21–24 are subject to a sunset provision of May 31, 2015.)

The grantee's proposed service area under the ASF would be the Counties of Accomack, Gloucester, Isle of Wight, James City, Mathews, Northampton, Southampton, Sussex, Surry, and York and the Cities of Chesapeake, Franklin, Hampton, Newport News, Norfolk, Poquoson, Portsmouth, Suffolk, Virginia Beach and Williamsburg, Virginia, as described in the application. If approved, the grantee would be able to serve sites throughout the service area based on companies' needs for FTZ designation. The proposed service area is within and adjacent to the Norfolk-Newport News Customs and Border Protection port of entry.

The applicant is requesting authority to reorganize its existing zone under the ASF as follows: to renumber parcel A of Site 7 as Site 7; to renumber parcel B of Site 7 as Site 27; to renumber parcel C of Site 7 as Site 28; to renumber parcel D of Site 7 as Site 29; to renumber parcel E of Site 7 as Site 30; to renumber parcel F of Site 7 as Site 31; Sites 3, 4, 5, 6, 7, 8, 9, 11, 12, 13, 14, 15, 16, 17, 18, 19, 21, 23, 24, 28, 29, 30 and 31 would become magnet sites; and, Sites 1, 2, 10, 22, 25, 27, 32 and 33 would become ''usage-driven'' sites. The applicant is also requesting to expand the zone to include a new magnet site: *Proposed Site 34* (202 acres)—Suffolk Intermodal Center, 2700 Holland Road, Suffolk and, the following ''usage-driven'' site: *Proposed Site 35* (54 acres)—Katoen Natie Norfolk, Inc., 810 Ford Drive, Norfolk.

The ASF allows for the possible exemption of one magnet site from the ''sunset'' time limits that generally apply to sites under the ASF, and the applicant proposes that Site 4 be so exempted. The application would have no impact on FTZ 20's previously authorized subzones.

In accordance with the Board's regulations, Kathleen Boyce of the FTZ Staff is designated examiner to evaluate and analyze the facts and information presented in the application and case record and to report findings and recommendations to the Board.

Public comment is invited from interested parties. Submissions shall be addressed to the Board's Executive Secretary at the address below. The closing period for their receipt is June 24, 2013. Rebuttal comments in response to material submitted during

the foregoing period may be submitted during the subsequent 15-day period to July 8, 2013.

A copy of the application will be available for public inspection at the Office of the Executive Secretary, Foreign-Trade Zones Board, Room 21013, U.S. Department of Commerce, 1401 Constitution Avenue NW., Washington, DC 20230–0002, and in the ''Reading Room'' section of the Board's Web site, which is accessible via *www.trade.gov/ftz*. For further information, contact Kathleen Boyce at *Kathleen.Boyce@trade.gov* or (202) 482–1346.

Dated: April 18, 2013.

Andrew McGilvray,

Executive Secretary.

[FR Doc. 2013–09696 Filed 4–23–13; 8:45 am]

BILLING CODE P

DEPARTMENT OF COMMERCE

Foreign-Trade Zones Board

[B–33–2013]

Foreign-Trade Zone (FTZ) 75–Phoenix, Arizona; Notification of Proposed Production Activity; Orbital Sciences Corporation (Satellites and Spacecraft Launch Vehicles); Gilbert, Arizona

The City of Phoenix, grantee of FTZ 75, submitted a notification of proposed production activity on behalf of Orbital Sciences Corporation (OSC), located in Gilbert, Arizona. The notification conforming to the requirements of the regulations of the FTZ Board (15 CFR 400.22) was received on April 2, 2013.

The OSC facility is located within Site 10 of FTZ 75. The facility is used for the production of satellites and spacecraft launch vehicles. Pursuant to 15 CFR 400.14(b), FTZ activity would be limited to the specific foreign-status materials and components and specific finished products described in the submitted notification (as described below) and subsequently authorized by the FTZ Board.

Production under FTZ procedures could exempt OSC from customs duty payments on the foreign status materials and components used in export production. On its domestic sales, OSC would be able to choose the duty rate during customs entry procedures that applies to satellites and spacecraft launch vehicles (free) for the foreign status inputs noted below. Customs duties also could possibly be deferred or reduced on foreign status production equipment.

The components and materials sourced from abroad include: Pyrotechnic detonators/fuses/bolt cutters; plastic tapes; thermal tubes; polyethylene films (ballotini); insulation (kapton) films; thermal isolator washers; articles of rubber (rings, seals); flight cases; insulation and insulation mats; cable restraints; pipelines; filters; graphite panels; optic solar reflectors; mirrors; fiberglass sheeting and tape; articles of steel (wire, adapters, flanges, hoses, plugs, fittings, couplers, springs, shims, cradles, turnbuckles, bushings); fasteners; articles of copper (wire, shims, nozzles); articles of aluminum (covers, reflectors, shims); hydraulic positioners; flange assemblies; pumps and pumping systems; manifolds; air dryers; fuel scales and systems; instruments; telemetry units; computer processors; automated test systems; storage drives; insulated pipes; metal adapters/gaskets/seals; solar drives; power supplies; batteries; heating elements; radio reception/transmission devices; avionics; power blocks; inverters; converters; telemetry components; antennae; receivers; electrical components; printed-circuit boards/panels; test/measurement equipment; radiation detectors; solar arrays; transformers; magnetometers; attenuators; wiring/cable harnesses; fiber optic cables; optical and electrical sensors; power meters; gauges; interferometers; shock recorders; expulsion panels; and monitoring systems (duty rate ranges from free to 20%). Inputs included in certain textile categories (classified within HTSUS Subheadings 5601.21, 5607.50) will be admitted to the zone under privileged foreign status (19 CFR 146.41) or domestic (duty paid) status (19 CFR 146.43), thereby precluding inverted tariff benefits on such items.

Public comment is invited from interested parties. Submissions shall be addressed to the FTZ Board's Executive Secretary at the address below. The closing period for their receipt is June 3, 2013.

A copy of the notification will be available for public inspection at the Office of the Executive Secretary, Foreign-Trade Zones Board, Room 21013, U.S. Department of Commerce, 1401 Constitution Avenue NW., Washington, DC 20230–0002, and in the ''Reading Room'' section of the FTZ Board's Web site, which is accessible via *www.trade.gov/ftz*.

For further information, contact Pierre Duy at *Pierre.Duy@trade.gov* or (202) 482–1378.

Dated: April 17, 2013.

Andrew McGilvray,

Executive Secretary.

[FR Doc. 2013–09698 Filed 4–23–13; 8:45 am]

BILLING CODE P

DEPARTMENT OF COMMERCE

Bureau of Industry and Security

Proposed Information Collection; Comment Request; Application for NATO International Competitive Bidding

AGENCY: Bureau of Industry and Security, Commerce.

ACTION: Notice.

SUMMARY: The Department of Commerce, as part of its continuing effort to reduce paperwork and respondent burden, invites the general public and other Federal agencies to take this opportunity to comment on proposed and/or continuing information collections, as required by the Paperwork Reduction Act of 1995.

DATES: Written comments must be submitted on or before June 24, 2013.

ADDRESSES: Direct all written comments to Jennifer Jessup, Departmental Paperwork Clearance Officer, Department of Commerce, Room 6616, 14th and Constitution Avenue NW., Washington, DC 20230 (or via the Internet at *JJessup@doc.gov*).

FOR FURTHER INFORMATION CONTACT: Requests for additional information or copies of the information collection instrument and instructions should be directed to Larry Hall, BIS ICB Liaison, (202) 482–4895, *Lawrence.Hall@bis.doc.gov*.

SUPPLEMENTARY INFORMATION:

I. Abstract

Opportunities to bid for contracts under the North Atlantic Treaty Organization (NATO) Security Investment Program (NSIP) are only open to firms of member NATO countries. NSIP procedures for international competitive bidding (AC/4–D/2261) require that each NATO country certify that their respective firms are eligible to bid on such contracts. This is done through the issuance of a ''Declaration of Eligibility.'' The U.S. Department of Commerce, Bureau of Industry and Security (BIS) is the executive agency responsible for certifying U.S. firms. The BIS–4023P is the application form used to collect information needed to ascertain the eligibility of a U.S. firm. BIS will review applications for completeness and accuracy, and

determine a company's eligibility based on its financial viability, technical capability, and security clearances with the U.S. Department of Defense.

II. Method of Collection

Submitted electronically or on paper.

III. Data

OMB Control Number: 0694–0128.
Form Number(s): BIS–4023P.
Type of Review: Regular submission (extension of a currently approved information collection).
Affected Public: Business or other for-profit organizations.
Estimated Number of Respondents: 40.
Estimated Time per Response: 1 hour.
Estimated Total Annual Burden Hours: 40.
Estimated Total Annual Cost to Public: $0.

IV. Request for Comments

Comments are invited on: (a) Whether the proposed collection of information is necessary for the proper performance of the functions of the agency, including whether the information shall have practical utility; (b) the accuracy of the agency's estimate of the burden (including hours and cost) of the proposed collection of information; (c) ways to enhance the quality, utility, and clarity of the information to be collected; and (d) ways to minimize the burden of the collection of information on respondents, including through the use of automated collection techniques or other forms of information technology.

Comments submitted in response to this notice will be summarized and/or included in the request for OMB approval of this information collection; they also will become a matter of public record.

Dated: April 18, 2013.

Gwellnar Banks,

Management Analyst, Office of the Chief Information Officer.

[FR Doc. 2013–09599 Filed 4–23–13; 8:45 am]

BILLING CODE 3510–33–P

DEPARTMENT OF COMMERCE

Bureau of Industry and Security

Proposed Information Collection; Comment Request; International Import Certificate

AGENCY: Bureau of Industry and Security, Commerce.

ACTION: Notice.

SUMMARY: The Department of Commerce, as part of its continuing effort to reduce paperwork and respondent burden, invites the general public and other Federal agencies to take this opportunity to comment on proposed and/or continuing information collections, as required by the Paperwork Reduction Act of 1995.

DATES: Written comments must be submitted on or before June 24, 2013.

ADDRESSES: Direct all written comments to Jennifer Jessup, Departmental Paperwork Clearance Officer, Department of Commerce, Room 6616, 14th and Constitution Avenue NW., Washington, DC 20230 (or via the Internet at *JJessup@doc.gov*).

FOR FURTHER INFORMATION CONTACT: Requests for additional information or copies of the information collection instrument and instructions should be directed to Larry Hall, BIS ICB Liaison, (202) 482–4895, *Lawrence.Hall@bis.doc.gov.*

SUPPLEMENTARY INFORMATION:

I. Abstract

The United States and several other countries have increased the effectiveness of their respective controls over international trade in strategic commodities by means of an Import Certificate procedure. For the U.S. importer, this procedure provides that, where required by the exporting country, the importer submits an international import certificate to the U.S. Government to certify that he/she will import commodities into the United States and will not reexport such commodities, except in accordance with the export control regulations of the United States. The U.S. Government, in turn, certifies that such representations have been made.

II. Method of Collection

Submitted electronically or on paper.

III. Data

OMB Control Number: 0694–0017.
Form Number(s): BIS–645P.
Type of Review: Regular submission (extension of a currently approved information collection).
Affected Public: Business or other for-profit organizations.
Estimated Number of Respondents: 195.
Estimated Time per Response: 16 minutes.
Estimated Total Annual Burden Hours: 52.
Estimated Total Annual Cost to Public: $0.

IV. Request for Comments

Comments are invited on: (a) Whether the proposed collection of information is necessary for the proper performance of the functions of the agency, including whether the information shall have practical utility; (b) the accuracy of the agency's estimate of the burden (including hours and cost) of the proposed collection of information; (c) ways to enhance the quality, utility, and clarity of the information to be collected; and (d) ways to minimize the burden of the collection of information on respondents, including through the use of automated collection techniques or other forms of information technology.

Comments submitted in response to this notice will be summarized and/or included in the request for OMB approval of this information collection; they also will become a matter of public record.

Dated: April 19, 2013.

Gwellnar Banks,

Management Analyst, Office of the Chief Information Officer.

[FR Doc. 2013–09617 Filed 4–23–13; 8:45 am]

BILLING CODE 3510–33–P

DEPARTMENT OF COMMERCE

Bureau of Industry and Security

Transportation and Related Equipment Technical Advisory Committee; Notice of Partially Closed Meeting

The Transportation and Related Equipment Technical Advisory Committee will meet on May 8, 2013, 9:30 a.m., in the Herbert C. Hoover Building, Room 6087B, 14th Street between Constitution & Pennsylvania Avenues NW., Washington, DC. The Committee advises the Office of the Assistant Secretary for Export Administration with respect to technical questions that affect the level of export controls applicable to transportation and related equipment or technology.

Agenda

Public Session

1. Welcome and Introductions.
2. Status reports by working group chairs.
3. Public comments and Proposals.

Closed Session

4. Discussion of matters determined to be exempt from the provisions relating to public meetings found in 5 U.S.C. app. 2 §§ 10(a)(1) and 10(a)(3).

The open session will be accessible via teleconference to 20 participants on a first come, first serve basis. To join the conference, submit inquiries to Ms. Yvette Springer at

Yvette.Springer@bis.doc.gov no later than May 1, 2013.

A limited number of seats will be available during the public session of the meeting. Reservations are not accepted. To the extent time permits, members of the public may present oral statements to the Committee. The public may submit written statements at any time before or after the meeting. However, to facilitate distribution of public presentation materials to Committee members, the Committee suggests that presenters forward the public presentation materials prior to the meeting to Ms. Springer via email.

The Assistant Secretary for Administration, with the concurrence of the delegate of the General Counsel, formally determined on October 19, 2012, pursuant to Section 10(d) of the Federal Advisory Committee Act, as amended (5 U.S.C. app. 2 § (10)(d)), that the portion of the meeting dealing with pre-decisional changes to the Commerce Control List and U.S. export control policies shall be exempt from the provisions relating to public meetings found in 5 U.S.C. app. 2 §§ 10(a)(1) and 10(a)(3). The remaining portions of the meeting will be open to the public.

For more information, call Yvette Springer at (202) 482–2813.

Dated: April 18, 2013.

Yvette Springer,

Committee Liaison Officer.

[FR Doc. 2013–09660 Filed 4–23–13; 8:45 am]

BILLING CODE P

DEPARTMENT OF COMMERCE

Bureau of Industry and Security

Information Systems Technical Advisory Committee; Notice of Partially Closed Meeting

The Information Systems Technical Advisory Committee (ISTAC) will meet on May 7 and 8, 2013, 9:00 a.m., in the Herbert C. Hoover Building, Room 3884, 14th Street between Constitution and Pennsylvania Avenues NW., Washington, DC. The Committee advises the Office of the Assistant Secretary for Export Administration on technical questions that affect the level of export controls applicable to information systems equipment and technology.

Tuesday, May 7

Open Session

1. Welcome and Introductions.
2. Working Group Reports.
3. Industry presentation: Oscilloscopes Architectures.
4. Industry presentation: 5E1c1 Technology.
5. New business.

Wednesday, May 8

Closed Session

6. Discussion of matters determined to be exempt from the provisions relating to public meetings found in 5 U.S.C. app. 2 10(a)(1) and 10(a)(3).

The open session will be accessible via teleconference to 20 participants on a first come, first serve basis. To join the conference, submit inquiries to Ms. Yvette Springer at *Yvette.Springer@bis.doc.gov,* no later than April 30, 2013.

A limited number of seats will be available for the public session. Reservations are not accepted. To the extent time permits, members of the public may present oral statements to the Committee. The public may submit written statements at any time before or after the meeting. However, to facilitate distribution of public presentation materials to Committee members, the Committee suggests that public presentation materials or comments be forwarded before the meeting to Ms. Springer.

The Assistant Secretary for Administration, with the concurrence of the delegate of the General Counsel, formally determined on April 4, 2013, pursuant to Section 10(d) of the Federal Advisory Committee Act, as amended (5 U.S.C. app. 2 (10)(d))), that the portion of the meeting concerning trade secrets and commercial or financial information deemed privileged or confidential as described in 5 U.S.C. 552b(c)(4) and the portion of the meeting concerning matters the disclosure of which would be likely to frustrate significantly implementation of an agency action as described in 5 U.S.C. 552b(c)(9)(B) shall be exempt from the provisions relating to public meetings found in 5 U.S.C. app. 2 10(a)(1) and 10(a)(3). The remaining portions of the meeting will be open to the public.

For more information, call Yvette Springer at (202) 482–2813.

Dated: April 18, 2013.

Yvette Springer,

Committee Liaison Officer .

[FR Doc. 2013–09658 Filed 4–23–13; 8:45 am]

BILLING CODE 3510–JT–P

DEPARTMENT OF COMMERCE

Bureau of Industry and Security

Materials Processing Equipment Technical Advisory Committee; Notice of Partially Closed Meeting

The Materials Processing Equipment Technical Advisory Committee (MPETAC) will meet on May 14, 2013, 9:00 a.m., Room 3884, in the Herbert C. Hoover Building, 14th Street between Pennsylvania and Constitution Avenues NW., Washington, DC. The Committee advises the Office of the Assistant Secretary for Export Administration with respect to technical questions that affect the level of export controls applicable to materials processing equipment and related technology.

Agenda

Open Session

1. Opening remarks and introductions.
2. Presentation of papers and comments by the Public.
3. Discussions on results from last, and proposals for next Wassenaar meeting.
4. Report on proposed and recently issued changes to the Export Administration Regulations.
5. Other business.

Closed Session

6. Discussion of matters determined to be exempt from the provisions relating to public meetings found in 5 U.S.C. app. 2 §§ 10 (a) (1) and 10 (a) (3).

The open session will be accessible via teleconference to 20 participants on a first come, first serve basis. To join the conference, submit inquiries to Ms. Yvette Springer at *Yvette.Springer@bis.doc.gov,* no later than May 7, 2013.

A limited number of seats will be available for the public session. Reservations are not accepted. To the extent that time permits, members of the public may present oral statements to the Committee. The public may submit written statements at any time before or after the meeting. However, to facilitate the distribution of public presentation materials to the Committee members, the Committee suggests that presenters forward the public presentation materials prior to the meeting to Ms. Springer via email.

The Assistant Secretary for Administration, with the concurrence of the delegate of the General Counsel, formally determined on February 20, 2013, pursuant to Section 10(d) of the Federal Advisory Committee Act, as amended (5 U.S.C. app. 2 § 10(d)), that

the portion of the meeting dealing with matters the premature disclosure of which would be likely to frustrate significantly implementation of a proposed agency action as described in 5 U.S.C. 552b(c)(9)(B) shall be exempt from the provisions relating to public meetings found in 5 U.S.C. app. 2 §§ 10(a)(1) and 10(a)(3). The remaining portions of the meeting will be open to the public.

For more information, call Yvette Springer at (202) 482–2813.

Dated: April 18, 2013.

Yvette Springer,

Committee Liaison Officer.

[FR Doc. 2013–09639 Filed 4–23–13; 8:45 am]

BILLING CODE 3510–JT–P

DEPARTMENT OF COMMERCE

Bureau of Industry and Security

Materials Technical Advisory Committee; Notice of Partially Closed Meeting

The Materials Technical Advisory Committee will meet on May 9, 2013, 10:00 a.m., Herbert C. Hoover Building, Room 6087B, 14th Street between Constitution & Pennsylvania Avenues NW., Washington, DC. The Committee advises the Office of the Assistant Secretary for Export Administration with respect to technical questions that affect the level of export controls applicable to materials and related technology.

Agenda

Open Session

1. Opening Remarks and Introductions.
2. Presentation of new MTAC chair and recognition of Thomas May and his service as Chair.
3. Remarks from the Bureau of Industry and Security senior management.
4. Discussion on General Technology Note as it applies to new CCL entries.
5. Brief on Commerce and Initial Implementation Rule by Regulations Division.
6. Report of Composite Working Group and other working groups.
7. Report on regime-based activities.
8. Public Comments and New Business.

Closed Session

9. Discussion of matters determined to be exempt from the provisions relating to public meetings found in 5 U.S.C. app. 2 §§ l0(a)(1) and 10(a)(3).

The open session will be accessible via teleconference to 20 participants on a first come, first serve basis. To join the conference, submit inquiries to Ms. Yvette Springer at *Yvette.Springer@bis.doc.gov,* no later than May 2, 2013.

A limited number of seats will be available during the public session of the meeting. Reservations are not accepted. To the extent time permits, members of the public may present oral statements to the Committee. Written statements may be submitted at any time before or after the meeting. However, to facilitate distribution of public presentation materials to Committee members, the materials should be forwarded prior to the meeting to Ms. Springer via email.

The Assistant Secretary for Administration, with the concurrence of the delegate of the General Counsel, formally determined on October 2, 2012, pursuant to Section 10(d) of the Federal Advisory Committee Act, as amended (5 U.S.C. app. 2 § 10(d)), that the portion of the meeting dealing with pre-decisional changes to the Commerce Control List and the U.S. export control policies shall be exempt from the provisions relating to public meetings found in 5 U.S.C. app. 2 § § 10(a)(1) and 10(a)(3). The remaining portions of the meeting will be open to the public.

For more information, call Yvette Springer at (202) 482–2813.

Dated: April 18, 2013.

Yvette Springer,

Committee Liaison Officer.

[FR Doc. 2013–09648 Filed 4–23–13; 8:45 am]

BILLING CODE 3510–JT–P

DEPARTMENT OF COMMERCE

National Oceanic and Atmospheric Administration

RIN 0648–XC533

Takes of Marine Mammals Incidental to Specified Activities; Navy Training Conducted at the Silver Strand Training Complex, San Diego Bay

AGENCY: National Marine Fisheries Service (NMFS), National Oceanic and Atmospheric Administration (NOAA), Commerce.

ACTION: Notice; proposed incidental harassment authorization; request for comments.

SUMMARY: NMFS has received a complete application from the U.S. Navy (Navy) for an Incidental Harassment Authorization (IHA) to take marine mammals, by harassment, incidental to conducting training exercises at the Silver Strand Training Complex (SSTC) in the vicinity of San Diego Bay, California. Pursuant to the Marine Mammal Protection Act (MMPA), NMFS is requesting comments on its proposal to issue an IHA to the Navy to incidentally harass, by Level B Harassment only, eight species of marine mammals during the specified activity.

DATES: Comments and information must be received no later than May 24, 2013.

ADDRESSES: Comments on the application should be addressed to P. Michael Payne, Chief, Permits and Conservation Division, Office of Protected Resources, National Marine Fisheries Service, 1315 East-West Highway, Silver Spring, MD 20910–3225. The mailbox address for providing email comments is *itp.magliocca@noaa.gov.* NMFS is not responsible for email comments sent to addresses other than the one provided here. Comments sent via email, including all attachments, must not exceed a 10-megabyte file size.

Instructions: All comments received are a part of the public record and will generally be posted to *http://www.nmfs.noaa.gov/pr/permits/incidental.htm* without change. All Personal Identifying Information (for example, name, address, etc.) voluntarily submitted by the commenter may be publicly accessible. Do not submit Confidential Business Information or otherwise sensitive or protected information.

A copy of the application may be obtained by visiting the internet at: *http://www.nmfs.noaa.gov/pr/permits/incidental.htm.* Documents cited in this notice may also be viewed, by appointment, during regular business hours, at the aforementioned address.

FOR FURTHER INFORMATION CONTACT: Michelle Magliocca, Office of Protected Resources, NMFS, (301) 427–8401.

SUPPLEMENTARY INFORMATION:

Background

Sections 101(a)(5)(A) and (D) of the MMPA (16 U.S.C. 1361 *et seq.*) direct the Secretary of Commerce (Secretary) to allow, upon request, the incidental, but not intentional taking of small numbers of marine mammals by U.S. citizens who engage in a specified activity (other than commercial fishing) if certain findings are made and regulations are issued or, if the taking is limited to harassment, notice of a proposed authorization is provided to the public for review.

Authorization for incidental takings shall be granted if NMFS finds that the taking will have a negligible impact on the species or stock(s), will not have an

unmitigable adverse impact on the availability of the species or stock(s) for subsistence uses (where relevant), and if the permissible methods of taking and requirements pertaining to the mitigation, monitoring and reporting of such taking are set forth. NMFS has defined ''negligible impact'' in 50 CFR 216.103 as: ''* * * an impact resulting from the specified activity that cannot be reasonably expected to, and is not reasonably likely to, adversely affect the species or stock through effects on annual rates of recruitment or survival.''

The National Defense Authorization Act of 2004 (NDAA) (Public Law 108–136) removed the ''small numbers'' and ''specified geographical region'' limitations and amended the definition of ''harassment'' as it applies to a ''military readiness activity'' to read as follows (Section 3(18)(B) of the MMPA): (i) Any act that injures or has the significant potential to injure a marine mammal or marine mammal stock in the wild [Level A Harassment]; or (ii) any act that disturbs or is likely to disturb a marine mammal or marine mammal stock in the wild by causing disruption of natural behavioral patterns, including, but not limited to, migration, surfacing, nursing, breeding, feeding, or sheltering, to a point where such behavioral patterns are abandoned or significantly altered [Level B Harassment].

Section 101(a)(5)(D) of the MMPA established an expedited process by which citizens of the United States can apply for an authorization to incidentally take small numbers of marine mammals by harassment. Section 101(a)(5)(D) establishes a 45-day time limit for NMFS review of an application followed by a 30-day public notice and comment period on any proposed authorizations for the incidental harassment of marine mammals. Within 45 days of the close of the comment period, NMFS must either issue or deny the authorization.

Summary of Request

NMFS received an application on December 19, 2012, from the Navy for the taking, by harassment, of marine mammals incidental to conducting training exercises at the Navy's Silver Strand Training Complex (SSTC) in the vicinity of San Diego Bay, California. Underwater detonations and pile driving/removal during training events at the SSTC may rise to the level of harassment as defined under the MMPA. The Navy is currently operating under an IHA for training activities at the SSTC covering the period from July 18, 2012, through July 17, 2013.

Description of the Specific Activity

The Navy has conducted a review of its continuing and proposed training conducted at the SSTC to determine whether there is a potential for harassment of marine mammals. Underwater detonation training and pile driving, as described below, may result in the incidental take of marine mammals from elevated levels of sound. Other training events conducted at the SSTC, which are not expected to rise to the level of harassment, are described in the SSTC Final Environmental Impact Statement (*http://www.nmfs.noaa.gov/pr/permits/incidental.htm#applications*).

Underwater Detonations

Underwater detonations are conducted by Explosive Ordnance Disposal (EOD) units, Naval Special Warfare (NSW) units, MH–60S Mine Countermeasure helicopter squadrons, and Mobile Diving and Salvage units at the SSTC. The training provides Navy personnel with hands-on experience with the design, deployment, and detonation of underwater clearance devices of the general type and size that they are required to understand and utilize in combat. EOD units conduct most of the underwater detonation training at the SSTC as part of their training in the detection, avoidance, and neutralization of mines. Tables 1–3 and 2–1 in the Navy's LOA application describe in detail the types of underwater detonation training events conducted at the SSTC. Below is a basic description of some underwater detonation procedures that typically apply to underwater training events at the SSTC, with the exception of the Unmanned Underwater Vehicle Neutralization and Airborne Mine Neutralization System.

- Prior to getting underway, all EOD and NSW personnel conduct a detailed safety and procedure briefing to familiarize everyone with the goals, objectives, and safety requirements (including mitigation zones) applicable to the particular training event.
- For safety reasons, and in accordance with Navy directives, given the training nature of many of these events, underwater detonations only occur during daylight and are only conducted in sea-states of up to Beaufort 3 (presence of large wavelets, crests beginning to break, presence of glassy foam, and/or perhaps scattered whitecaps).
- EOD or NSW personnel can be transported to the planned detonation site via small boat or helicopter depending on the training event. Small boats can include 7-m Rigid Hull Inflatable Boats (RHIB), zodiacs, or other similar craft as available to the particular unit.
- Once on site, the applicable mitigation zone is established and visual survey commences for 30 minutes. Divers enter the water to conduct the training objective which could include searching for a training object such as a simulated mine or mine-like shape.
- For the detonation part of the training, the explosive charge and associate charge initiating device are taken to the detonation point. The explosives used are military forms of C–4. In order to detonate C–4, a fusing and initiating device is required.
- Following a particular underwater detonation, additional personnel in the support boats (or helicopter) keep watch within the mitigation zone for 30 minutes.
- Concurrent with the post-detonation survey, divers return to the detonation site to confirm the explosives detonated correctly and retrieve any residual material (pieces of wire, tape, large fragments, etc.).

The Navy uses both time-delay and positive control to initiate underwater detonations, depending on the training event and objectives. The time-delay method uses a Time-delay Firing Device (TDFD) and the positive control method most commonly uses a Remote Firing Device (RFD). TDFDs are the simplest, safest, least expensive, most operationally acceptable method of initiating an underwater detonation. TDFDs are preferred due to their light weight, low magnetic signature (in cases of mines sensitive to magnetic fields), and reduced risk of accidental detonation from nearby radios or other electronics. TDFDs allow sufficient time for EOD personnel to swim outside of the detonation plume radius and human safety buffer zone after the timer is set. For a surface detonation training event involving a helicopter or a boat, the minimum time-delay that is reasonable for EOD divers to make their way to safety is about 10 minutes. For underwater detonation training events at depth using small boats, the time-delay can be minimized to 5 minutes; however, this requires the instructors to handle initiation of the detonation and therefore results in decreased training value for students. The Navy considers it critical that EOD and NSW platoons qualify annually with necessary time-delay certification, maintain proficiency, and train to face real-world scenarios that require use of TDFDs.

While positive control devices do allow for instantaneous detonation of a

charge and are used for some SSTC training events, RFDs are the less-preferred method to initiate an underwater detonation. Current Navy RFDs use a radio signal to remotely detonate a charge. By using electronic positive control devices such as the RFD, additional electronic signals and metal from the receiver and wiring is unnecessarily introduced into the operating environment. Underwater detonation events need to be kept as simple and streamlined as possible, especially when diver safety is considered. In an open ocean environment, universal use of RFDs would greatly increase the risk of misfire due to component failure, and put unnecessary stress on all needed connections and devices (adding 600–1,000 feet of firing wire; building/deploying an improvised, bulky, floating system for the RFD receiver; and adding another 180 feet of detonating cord plus 10 feet of other material).

Pile Driving

Installation and removal of Elevated Causeway System (ELCAS) support piles may also result in the harassment of marine mammals. The ELCAS is a modular pre-fabricated causeway pier that links offshore amphibious supply ships with associated lighterage (i.e., small cargo boats and barges). Offloaded vehicles and supplies can be driven on the causeway to and from shore.

During ELCAS training events, 24-inch wide hollow steel piles would be driven into the sand in the surf zone with an impact hammer. About 101 piles would be driven into the beach and surf zone with a diesel impact hammer over the course of about 10 days, 24-hours per day (i.e., day and night). Each pile takes an average of 10 minutes to install, with around 250 to 300 impacts per pile. Pile driving includes a semi-soft start as part of the normal operating procedure based on the design of the drive equipment. The pile driver increases impact strength as resistance goes up. At first, the pile driver piston drops a few inches. As resistance goes up, the pile driver piston drops from a higher distance, providing more impact due to gravity. The pile driver can take 5 to 7 minutes to reach full impact strength. As chapters of piles are installed, causeway platforms are then hoisted and secured onto the piles with hydraulic jacks and cranes. At the end of training, the ELCAS piles would be removed with a vibratory extractor. Removal takes about 15 minutes per pile over a period of around 3 days. ELCAS training may occur along both the ocean side (SSTC-North boat and beach lanes) and with the designated training lane within Bravo beach on the bayside of SSTC. Up to four ELCAS training/installation events may occur during the year.

Dates and Duration of Proposed Activities

The Navy's proposed activities would occur between July 2013 and July 2014. Most underwater detonation training events include one or two detonations. Table 2–1 in the Navy's LOA application shows the 19 different types and number of training events per year in the SSTC. Pile installation and removal would occur over an approximate 13 day period, up to four times per year. NMFS is proposing to issue a 1-year IHA that may be superseded if we issue a Letter of Authorization under regulations for the Navy's Hawaii-Southern California Training and Testing (HSTT) (which would include the SSTC) prior to expiration of the IHA.

Location of Proposed Activities

The SSTC (Figure 1–1 of the Navy's IHA application) is located in and adjacent to San Diego Bay, south of Coronado, California and north of Imperial Beach, California. The complex is composed of ocean and bay training lanes, adjacent beach training areas, ocean anchorages, and inland training areas. To facilitate range management and scheduling, the SSTC is divided into numerous training sub-areas.

The surfside training lanes of the SSTC are located in the Silver Strand Littoral Cell, which is an exposed, open subtidal area of the Pacific Ocean extending from south of the international border to the Zuniga Jetty at San Diego Bay for over 17 miles of coastal reach. The Silver Strand Littoral Cell is a coastal eddy system that dominates local ocean movement and generally moves from south to north with periodic reversals. Surface water temperatures generally are highest from June through September and lowest from November through February. Historical temperatures in the study area range from 52 to 74 degrees Fahrenheit near the surface and from 49 to 61 degrees Fahrenheit near the bottom. Water temperatures near the beach tend to be more uniform throughout the water column due to turbulent mixing and shallower depth. The bathymetry off the surfside training lanes is relatively evenly sloped, with a predominantly soft sandy bottom mixed with minor amounts of mud, hard-shale bedrock, and small cobble-boulder fields. The area does not have underwater canyons or significant upwelling conditions. Flora and fauna in the region of the SSTC is dominated by coastal surf zone and some coastal pelagic zone species. In the summer of 2011, the Navy funded a new benthic habitat survey to reassess benthic habitat and bottom conditions with results shown in Figure 2–1 of the Navy LOA application. A second follow-up benthic habitat survey was performed in the late summer and fall of 2012 to cover areas between SSTC-North and SSTC-South, as well as areas further offshore to the 120-foot contour.

Description of Marine Mammals in the Area of the Specified Activity

Four marine mammal species may inhabit or regularly transit the SSTC area: California sea lion (*Zalophus californianus*), Pacific harbor seal (*Phoca vitulina richardsii*), California coastal stock of bottlenose dolphin (*Tursiops truncatus*), and gray whale (*Eschrichtius robustus*). Following the incident of common dolphin mortalities that resulted from the use of TDFDs during a training exercise in 2012, the Navy and NMFS reassessed the species distribution in the SSTC study area and included four additional dolphin species: long-beaked common dolphin (*Delphinus capensis*), short-beaked common dolphin (*D. delphis*), Pacific white-sided dolphin (*Lagenorhynchus obliquidens*), and Risso's dolphin (*Grampus griseus*). These four dolphin species are less frequent visitors, but have been sighted in the vicinity of the SSTC training area.

Navy-funded surveys in the SSTC in late 2012 and 2013 have documented the sporadic presence of long-beaked common dolphins near some parts of the SSTC. There is no documented NMFS sighting data for short-beaked common dolphin, Pacific white-sided dolphin, or Risso's dolphin, or other anecdotal information currently available as to likely presence within the very near-shore, shallow waters associated with the SSTC boat lanes. Therefore, the Navy included these species in their analysis in the rare event that they move through the SSTC boat lanes. None of the species above are listed as threatened or endangered under the Endangered Species Act (ESA). Further information on these species can also be found in the NMFS Stock Assessment Reports (SAR) (*http://www.nmfs.noaa.gov/pr/species/mammals/*).

California Sea Lions

The California sea lion is by far the most commonly-sighted pinniped species at sea or on land in the vicinity of the SSTC. Nearly all of the U.S. Stock

(more than 95 percent) of California sea lion breeds and gives birth to pups on San Miguel, San Nicolas, and Santa Barbara islands off California. Smaller numbers of pups are born on the Farallon Islands, and Año Nuevo Island (Lowry *et al.* 1992). In California waters, sea lions represented 97 percent (381 of 393) of identified pinniped sightings at sea during the 1998–1999 NMFS surveys (Carretta *et al.* 2000). They were sighted during all seasons and in all areas with survey coverage from nearshore to offshore areas (Carretta *et al.* 2000).

Survey data from 1975 to 1978 were analyzed to describe the seasonal shifts in the offshore distribution of California sea lions (Bonnell and Ford 1987). During summer, the highest densities were found immediately west of San Miguel Island. During autumn, peak densities of sea lions were centered on Santa Cruz Island. During winter and spring, peak densities occurred just north of San Clemente Island. The seasonal changes in the center of distribution were attributed to changes in the distribution of the prey species. If California sea lion distribution is determined primarily by prey abundance as influenced by variations in local, seasonal, and inter-annual oceanographic variation, these same areas might not be the center of sea lion distribution every year. Costa *et al.* (2007) was able to identify kernel home range contours for foraging female sea lions during non-El Nino conditions, although there was some variation over the three years of this tagging study. Melin *et al.* (2008) showed that foraging female sea lions showed significant variability in individual foraging behavior, and foraged farther offshore and at deeper depths during El Nino years as compared to non-El Nino years. The distribution and habitat use of California sea lions vary with the sex of the animals and their reproductive phase. Adult males haul out on land to defend territories and breed from mid-to-late May until late July. The pupping and mating season for sea lions begins in late May and continues through July (Heath 2002). Individual males remain on territories for 27–45 days without going to sea to feed. During August and September, after the mating season, the adult males migrate northward to feeding areas as far away as Washington (Puget Sound) and British Columbia (Lowry *et al.* 1992). They remain there until spring (March-May), when they migrate back to the breeding colonies. Thus, adult males are present in offshore areas of the SSTC only briefly as they move to and from rookeries. Distribution of immature California sea lions is less well known, but some make northward migrations that are shorter in length than the migrations of adult males (Huber 1991). However, most immature sea lions are presumed to remain near the rookeries, and thus remain near SSTC for most of the year (Lowry *et al.* 1992). Adult females remain near the rookeries throughout the year. Most births occur from mid-June to mid-July (peak in late June).

California sea lions feed on a wide variety of prey, including Pacific whiting, northern anchovy, mackerel, squid, sardines, and rockfish (Antonelis *et al.* 1990; Lowry *et al.* 1991; Lowry and Carretta 1999; Lowry and Forney 2005; Bearzi 2006). In Santa Monica Bay, California sea lions are known to follow and feed near bottlenose dolphins (Bearzi 2006), and if in the near shore waters of SSTC, may forage on common coastal beach fish species (corbina and barred surfperch) (Allen 2006).

There are limited published at-sea density estimates for pinnipeds within Southern California. Higher densities of California sea lions are observed during cold-water months. At-sea densities likely decrease during warm-water months because females spend more time ashore to give birth and attend to their pups. Radio-tagged female California sea lions at San Miguel Island spent approximately 70 percent of their time at sea during the non-breeding season (cold-water months) and pups spent an average of 67 percent of their time ashore during their mother's absence (Melin and DeLong 2000). Different age classes of California sea lions are found in the offshore areas of SSTC throughout the year (Lowry *et al.* 1992). Although adult male California sea lions feed in areas north of SSTC, animals of all other ages and sexes spend most, but not all, of their time feeding at sea during winter, thus, the winter estimates likely are somewhat low. During warm-water months, a high proportion of the adult males and females are hauled out at terrestrial sites during much of the period, so the summer estimates are low to a greater degree.

The NMFS population estimate of the U.S. Stock of California sea lions is 296,750 (Carretta *et al.* 2010). The California sea lion is not listed under the ESA, and the U.S. Stock, some of which occurs in the SSTC, is not considered a strategic stock under the MMPA.

Pacific Harbor Seal

Harbor seals are considered abundant throughout most of their range from Baja California to the eastern Aleutian Islands. An unknown number of harbor seals also occur along the west coast of Baja California, at least as far south as Isla Asuncion, which is about 100 miles south of Punta Eugenia. Animals along Baja California are not considered to be a part of the California stock because it is not known if there is any demographically significant movement of harbor seals between California and Mexico (Carretta *et al.* 2010). Peak numbers of harbor seals haul out on land during late May to early June, which coincides with the peak of their molt. They generally favor sandy, cobble, and gravel beaches (Stewart and Yochem 1994; 2000), and most haul out on the central California mainland and Santa Cruz Island (Lowry and Carretta 2003; Carretta *et al.* 2010).

There are limited at-sea density estimates for pinnipeds within Southern California. Harbor seals do not make extensive pelagic migrations, but do travel 300–500 km on occasion to find food or suitable breeding areas (Herder 1986; Carretta *et al.* 2007). Nursing of pups begins in late February, and pups start to become weaned in May. Breeding occurs between late March and early May on the southern and northern Channel Islands. When at sea during May and June (and March to May for breeding females), they generally remain in the vicinity of haul out sites and forage close to shore in relatively shallow waters. Based on likely foraging strategies, Grigg *et al.* (2009) reported seasonal shifts in harbor seal movements based on prey availability.

Harbor seals are opportunistic feeders that adjust their feeding to take advantage of locally and seasonally abundant prey which can include small crustaceans, rock fish, cusk-eel, octopus, market squid, and surfperch (Bigg 1981; Payne and Selzer 1989; Stewart and Yochem 1994; Stewart and Yochem 2000; Baird 2001; Oates 2005). If in the near shore waters of SSTC, harbor seals may forage on common coastal beach fish species, such as corbina and barred surfperch (Allen 2006).

Harbor seals are found in the SSTC throughout the year (Carretta *et al.* 2000). Based on the most recent harbor seal counts (19,608 in May-July 2009; NMFS unpublished data) and the Harvey and Goley (2011) correction factor, the harbor seal population in California is estimated to number 30,196.

The harbor seal is not listed under the ESA, and the California Stock, some of which occurs in the SSTC, is not considered a strategic stock under the MMPA. The California population has increased from the mid-1960s to the

mid-1990s, although the rate of increase may have slowed during the 1990s as the population has reached and may be stabilizing at carrying capacity (Hanan 1996, Carretta *et al.* 2010).

Bottlenose Dolphin

There are two distinct populations of bottlenose dolphins within southern California, a coastal population found within 0.5 nm (0.9 km) of shore and a larger offshore population (Hansen 1990; Bearzi *et al.* 2009). The California Coastal Stock is the only one of these two stocks likely to occur within the SSTC. The bottlenose dolphin California Coastal Stock occurs at least from Point Conception south into Mexican waters, at least as far south as San Quintin, Mexico. Bottlenose dolphins in the Southern California Bight (SCB) appear to be highly mobile within a relatively narrow coastal zone (Defran *et al.* 1999), and exhibit no seasonal site fidelity to the region (Defran and Weller 1999). There is little site fidelity of coastal bottlenose dolphins along the California coast; over 80 percent of the dolphins identified in Santa Barbara, Monterey, and Ensenada have also been identified off San Diego (Defran *et al.* 1999; Maldini-Feinholz 1996; Carretta *et al.* 2008; Bearzi *et al.* 2009). Bottlenose dolphins could occur in the SSTC at variable frequencies and periods throughout the year based on localized prey availability (Defran *et al.* 1999).

The Pacific coast bottlenose dolphins feed primarily on surf perches and croakers (Norris and Prescott 1961; Walker 1981; Schwartz *et al.* 1992; Hanson and Defran 1993), and also consume squid (Schwartz *et al.* 1992). The coastal stock of bottlenose dolphin utilizes a limited number of fish prey species with up to 74 percent being various species of surfperch or croakers, a group of non-migratory year-round coastal inhabitants (Defran *et al.* 1999; Allen *et al.* 2006). For Southern California, common croaker prey species include spotfin croaker, yellowfin croaker, and California corbina, while common surfperch species include barred surfperch and walleye surfperch (Allen *et al.* 2006). The corbina and barred surfperch are the most common surf zone fish where bottlenose dolphins have been observed foraging (Allen *et al.* 2006). Defran *et al.* (1999) postulated that the coastal stock of bottlenose dolphins showed significant movement within their home range (Central California to Mexico) in search of preferred but patchy concentrations of near shore prey (i.e., croakers and surfperch). After finding concentrations of prey, animals may then forage within a more limited spatial extent to take advantage of this local accumulation until such time that prey abundance is reduced after which the dolphins once again shift location over larger distances (Defran *et al.* 1999). Bearzi (2005) and Bearzi *et al.* (2009) also noted little site fidelity from coastal bottlenose dolphins in Santa Monica Bay, California, and that these animals were highly mobile with up to 69 percent of their time spent in travel and dive-travel mode and only 5 percent of the time in feeding behaviors.

Group size of the California coastal stock of bottlenose dolphins has been reported to range from 1 to 57 dolphins (Bearzi 2005), although mean pod sizes were around 19.8 (Defran and Weller 1999) and 10.1 (Bearzi 2005). An at-sea density estimate of 0.202 animals/km^2 was used for acoustic impact modeling for both the warm and cold seasons as derived in National Center for Coastal Ocean Science (2005).

Based on photographic mark-recapture surveys conducted along the San Diego coast in 2004 and 2005, population size for the California Coastal Stock of the bottlenose dolphin is estimated to be 323 individuals (CV = 0.13, 95% CI 259–430; Dudzik *et al.* 2005; Carretta *et al.* 2010). This estimate does not reflect that approximately 35 percent of dolphins encountered lack identifiable dorsal fin marks (Defran and Weller 1999). If 35 percent of all animals lack distinguishing marks, then the true population size would be closer to 450–500 animals (Carretta *et al.* 2010). The California Coastal Stock of bottlenose dolphins is not listed under the ESA, and is not considered a strategic stock under the MMPA.

Gray Whale

The Eastern North Pacific population is found from the upper Gulf of California (Tershy and Breese 1991), south to the tip of Baja California, and up the Pacific coast of North America to the Chukchi and Beaufort seas. There is a pronounced seasonal north-south migration. The eastern North Pacific population summers in the shallow waters of the northern Bering Sea, the Chukchi Sea, and the western Beaufort Sea (Rice and Wolman 1971). The northern Gulf of Alaska (near Kodiak Island) is also considered a feeding area; some gray whales occur there year-round (Moore *et al.* 2007). Some individuals spend the summer feeding along the Pacific coast from southeastern Alaska to central California (Sumich 1984; Calambokidis *et al.* 1987; 2002). Photo-identification studies indicate that gray whales move widely along the Pacific coast and are often not sighted in the same area each year (Calambokidis *et al.* 2002). In October and November, the whales begin to migrate southeast through Unimak Pass and follow the shoreline south to breeding grounds on the west coast of Baja California and the southeastern Gulf of California (Braham 1984; Rugh 1984). The average gray whale migrates 4,050 to 5,000 nm (7,500 to 10,000 km) at a rate of 80 nm (147 km) per day (Rugh *et al.* 2001; Jones and Swartz 2002). Although some calves are born along the coast of California (Shelden *et al.* 2004), most are born in the shallow, protected waters on the Pacific coast of Baja California from Morro de Santo Domingo (28°N) south to Isla Creciente (24°N) (Urbán *et al.* 2003). Main calving sites are Laguna Guerrero Negro, Laguna Ojo de Liebre, Laguna San Ignacio, and Estero Soledad (Rice *et al.* 1981).

A group of gray whales known as the Pacific Coast Feeding Aggregation (PCFA) feeds along the Pacific coast between southeastern Alaska and northern to central California throughout the summer and fall (NMFS 2001; Calambokidis *et al.* 2002; Calambokidis *et al.* 2004). The gray whales in this feeding aggregation are a relatively small proportion (a few hundred individuals) of the overall eastern North Pacific population and typically arrive and depart from these feeding grounds concurrently with the migration to and from the wintering grounds (Calambokidis *et al.* 2002; Allen and Angliss 2010). Although some site fidelity is known to occur, there is generally considerable inter-annual variation since many individuals do not return to the same feeding site in successive years (Calambokidis *et al.* 2000; Calambokidis *et al.* 2004).

The Eastern North Pacific stock of gray whale transits through Southern California during its northward and southward migrations between December and June. Gray whales follow three routes from within 15 to 200 km from shore (Bonnell and Dailey 1993). The nearshore route follows the shoreline between Point Conception and Point Vicente but includes a more direct line from Santa Barbara to Ventura and across Santa Monica Bay. Around Point Vicente or Point Fermin, some whales veer south towards Santa Catalina Island and return to the nearshore route near Newport Beach. Others join the inshore route that includes the northern chain of the Channel Islands along Santa Cruz Island and Anacapa Island and east along the Santa Cruz Basin to Santa Barbara Island and the Osborn Bank. From here, gray whales migrate east directly to Santa Catalina Island and then to Point Loma or Punta Descanso or southeast to San Clemente

Island and on to the area near Punta Banda. A significant portion of the Eastern North Pacific stock passes by San Clemente Island and its associated offshore waters (Carretta *et al.* 2000). The offshore route follows the undersea ridge from Santa Rosa Island to the mainland shore of Baja California and includes San Nicolas Island and Tanner and Cortes banks (Bonnell and Dailey 1993).

Peak abundance of gray whales off the coast of San Diego is typically January during the southward migration and in March during the migration north, although females with calves, which depart Mexico later than males or females without calves, can be sighted from March through May or June (Leatherwood 1974; Poole 1984; Rugh *et al.* 2001; Stevick *et al.* 2002; Angliss and Outlaw 2008). Gray whales would be expected to be infrequent migratory transients within the out portions of SSTC only during cold-water months (Carretta *et al.* 2000). Migrating gray whales that might infrequently transit through the SSTC would not be expected to forage, and would likely be present for less than two hours at typical travel speeds of 3 knots (approximately 3.5 miles per hour) (Perryman *et al.* 1999; Mate and Urbán-Ramirez 2003). A mean group size of 2.9 gray whales was reported for both coastal (16 groups) and non-coastal (15 groups) areas around San Clemente Island (Carretta *et al.* 2000). The largest group reported was nine animals. The largest group reported by U.S. Navy (1998) was 27 animals. Gray whales would not be expected in the SSTC from July through November (Rice *et al.* 1981), and are excluded from warm season analysis. Even though gray whale transitory occurrence is infrequent along SSTC a cold season density is estimated at 0.014 animals per km^2 for purposes of conservative analysis.

Systematic counts of gray whales migrating south along the central California coast have been conducted by shore-based observers at Granite Canyon most years since 1967. The population size of the Eastern North Pacific gray whale stock has been increasing over the past several decades at a rate approximately between 2.5 to 3.3 percent per year since 1967. The most recent abundance estimates are based on the National Marine Fisheries Service's population estimate of 19,126 individuals as reported in Allen and Angliss (2010).

In 1994, due to steady increases in population abundance, the Eastern North Pacific stock of gray whales was removed from the List of Endangered and Threatened Wildlife, as it was no longer considered endangered or threatened under the ESA (Allen and Angliss 2010). The Eastern North Pacific stock of gray whale is not considered a strategic stock under the MMPA. Even though the stock is within Optimal Sustainable Population, abundance will rise and fall as the population adjusts to natural and man-caused factors affecting the carrying capacity of the environment (Rugh *et al.* 2005). In fact, it is expected that a population close to or at the carrying capacity of the environment will be more susceptible to fluctuations in the environment (Moore *et al.* 2001).

Long-Beaked Common Dolphin, California Stock

Long-beaked common dolphins are found year-round in the waters off California (Carretta *et al.* 2000; Bearzi 2005; DoN 2009, 2010). The distribution and abundance of long-beaked common dolphins appears to be variable based on inter-annual and seasonal time scales (Dohl *et al.* 1986; Heyning and Perrin 1994; Barlow 1995; Forney *et al.* 1995; Forney and Barlow 2007). As oceanographic conditions change, long-beaked common dolphins may move between Mexican and U.S. waters, and therefore a multi-year average abundance estimate is the most appropriate for management within the U.S. waters (Carretta *et al.* 2010). California waters represent the northern limit for this stock and animal's likely movement between U.S. and Mexican waters. No information on trends in abundance is available for this stock because of high inter-annual variability in line-transect abundance estimates (Carretta *et al.* 2010). Heyning and Perrin (1994) detected changes in the proportion of short-beaked to long-beaked common dolphins stranding along the California coast, with the short-beaked common dolphin stranding more frequently prior to the 1982–83 El Niño (which increased water temperatures off California), and the long-beaked common dolphin more frequently observed for several years afterwards. Thus, it appears that both relative and absolute abundance of these species off California may change with varying oceanographic conditions (Carretta *et al.* 2010). Common dolphin distributions may be related to bathymetry (Hui 1979). Long-beaked common dolphins are usually found within 50 nautical miles (nm) (92.5 km) of shore with significantly more occurrence near canyons, escarpments, and slopes (Heyning and Perrin 1994; Barlow *et al.* 1997; Bearzi 2005, 2006). Group size ranges from less than a dozen to several thousand individuals (Barlow and Forney 2007; Barlow *et al.* 2010).

Recent anecdotal accounts from Navy Explosive Ordnance Disposal (EOD) divers remark on periodic sightings of large dolphin pods within the more seaward portions of the SSTC that are likely comprised of long-beaked common dolphin. During SSTC Navy-funded marine mammal monitoring conducted over 2 days in November 2012, there were confirmed sightings of long-beaked common dolphin pods in the outer portions of the SSTC in about 75 feet of water. Unlike the large congregated schools common to this species, the long-beaked common dolphins seen in November were in widely dispersed small sub-groups with one to five dolphins per group. Individuals and small groups were seen chasing bait fish to the surface and foraging. The dolphins were observed over a one-hour period and eventually left the SSTC heading seaward.

Sparse information is available on the life history of long-beaked common dolphins, however, some information is provided for short-beaked common dolphins which may also apply to long-beaked dolphins. North Pacific short-beaked common dolphin females and males reach sexual maturity at roughly 8 and 10 years, respectively (Ferrero and Walker 1995). Peak calving season for common dolphins in the eastern North Pacific may be spring and early summer (Forney 1994). Barlow (2010) reported average group size for long-beaked common dolphins within a Southern California-specific stratum as 195 individuals from a 2008 survey along the U.S. West Coast. The geometric mean abundance estimate in NMFS' annual stock assessment for the entire California stock of long-beaked common dolphins, based on two ship surveys conducted in 2005 and 2008, is 27,046 (CV = 0.59) (Forney 2007; Barlow 2010; Carretta *et al.* 2010). Using a more stratified approach, Barlow et al. (2010) estimated abundance within a Southern California-specific strata of 16,480 (CV = 0.41) long-beaked common dolphins based on analysis of pooled sighting data from 1991–2008. Long-beaked common dolphins are not listed under the ESA, and are not considered a strategic stock under the MMPA.

Pacific White-sided Dolphin, California/Oregon/Washington Stock

While Pacific white-sided dolphins could potentially occur year-round in Southern California, surveys suggest a seasonal north-south movement in the eastern North Pacific, with animals found primarily off California during the colder water months and shifting

northward into Oregon and Washington as water temperatures increase during late spring and summer (Green *et al.* 1992, 1993; Forney 1994; Forney and Barlow 2007; Barlow 2010). Salvadeo *et al.* (2010) propose that increased global warming may increase a northward shift in Pacific white-sided dolphins. The Pacific white-sided dolphin is most common in waters over the continental shelf and slope, however, sighting records and captures in pelagic driftnets indicate that this species also occurs in oceanic waters well beyond the shelf and slope (Leatherwood *et al.* 1984; DoN 2009, 2010). Soldevilla *et al.* (2010a) reported the possibility of two distinct eco-types of Pacific white-sided dolphins occurring in Southern California based on passive acoustic detection of two distinct echolocation click patterns. No population trends have been observed in California or adjacent waters. Barlow (2010) reported average group size for Pacific white-sided dolphins within a Southern California-specific stratum as 17 from a 2008 survey along the U.S. West Coast. The size of the entire California/Oregon/Washington Stock is estimated to be 26,930 (CV = 0.28) individuals (Forney 2007, Barlow, 2010). Using a more stratified approach, Barlow *et al.* (2010) estimated abundance within a Southern California-specific strata of 1,914 (CV = 0.39) Pacific white-sided dolphins based on analysis of pooled sighting data from 1991–2008. Pacific white-sided dolphins are not listed under the ESA, and are not considered a strategic stock under the MMPA.

Risso's Dolphin, California/Oregon/Washington Stock

Off the U.S. West coast, Risso's dolphins are commonly seen on the shelf off Southern California and in slope and offshore waters of California, Oregon and Washington (Soldevilla *et al.* 2010b; Carretta *et al.* 2010). Animals found off California during the colder water months are thought to shift northward into Oregon and Washington as water temperatures increase in late spring and summer (Green *et al.* 1992). The southern end of this population's range is not well documented, but previous surveys have shown a conspicuous 500 nm distributional gap between these animals and Risso's dolphins sighted south of Baja California and in the Gulf of California (Mangels and Gerrodette 1994). Thus this population appears distinct from animals found in the eastern tropical Pacific and the Gulf of California (Carretta *et al.* 2010). As oceanographic conditions vary, Risso's dolphins may spend time outside the U.S. Exclusive Economic Zone. Barlow (2010) reported average group size for Risso's dolphins within a Southern California-specific stratum as 23 from a 2008 survey along the U.S. West Coast. The size of the California/Oregon/Washington Stock is estimated to be 6,272 (CV = 0.30) individuals (Forney 2007; Barlow 2010; Carretta *et al.* 2010). Using a more stratified approach, Barlow *et al.* (2010) estimated abundance within a Southern California-specific strata of 3,974 (CV = 0.39) Risso's dolphins based on analysis of pooled sighting data from 1991–2008. Risso's dolphins are not listed under the ESA, and are not considered a strategic stock under the MMPA.

Short-Beaked Common Dolphin, California/Oregon/Washington Stock

Short-beaked common dolphins are the most abundant cetacean off California, and are widely distributed between the coast and at least 300 nm distance from shore (Dohl *et al.* 1981; Forney *et al.* 1995; Barlow 2010; Carretta *et al.* 2010). Along the U.S. West Coast, portions of the short-beaked common dolphins' distribution overlap with that of the long-beaked common dolphin. The northward extent of short-beaked common dolphin distribution appears to vary inter-annually and with changing oceanographic conditions (Forney and Barlow 1998). Barlow (2010) reported average group size for short-beaked common dolphins within a Southern California-specific stratum as 122 from a 2008 survey along the U.S. West Coast. The size of the California/Oregon/Washington Stock is estimated to be 411,211 (CV = 0.21) individuals (Carretta *et al.* 2010). Using a more stratified approach, Barlow *et al.* (2010) estimated abundance within a Southern California-specific strata of 152,000 (CV = 0.17) short-beaked common dolphins based on analysis of pooled sighting data from 1991–2008. Short-beaked common dolphins are not listed under the ESA, and are not considered a strategic stock under the MMPA.

Potential Effects on Marine Mammals

Anticipated impacts resulting from the Navy's proposed SSTC training activities include disturbance from underwater detonation events and pile driving from ELCAS training events if marine mammals are in the vicinity of these action areas.

Impacts From Anthropogenic Noise

Marine mammals exposed to high intensity sound repeatedly or for prolonged periods can experience hearing threshold shift (TS), which is the loss of hearing sensitivity at certain frequency ranges (Kastak *et al.* 1999; Schlundt *et al.* 2000; Finneran *et al.* 2002; 2005). TS can be permanent (PTS), in which case the loss of hearing sensitivity is unrecoverable, or temporary (TTS), in which case the animal's hearing threshold will recover over time (Southall *et al.* 2007). Since marine mammals depend on acoustic cues for vital biological functions, such as orientation, communication, finding prey, and avoiding predators, marine mammals that suffer from PTS or TTS will have reduced fitness in survival and reproduction, either permanently or temporarily. Repeated noise exposure that leads to TTS could cause PTS.

Although no marine mammals have been shown to experience TTS or PTS as a result of being exposed to pile driving activities, experiments on a bottlenose dolphin and beluga whale (*Delphinapterus leucas*) showed that exposure to a single watergun impulse at a received level of 207 kPa (or 30 psi) peak-to-peak (p-p), which is equivalent to 228 dB re 1 μPa (p-p), resulted in a 7 and 6 dB TTS in the beluga whale at 0.4 and 30 kHz, respectively. Thresholds returned to within 2 dB of the pre-exposure level within 4 minutes of the exposure (Finneran *et al.* 2002). No TTS was observed in the bottlenose dolphin. Although the source level of pile driving from one hammer strike is expected to be much lower than the single watergun impulse cited here, animals being exposed for a prolonged period to repeated hammer strikes could receive more noise exposure in terms of SEL than from the single watergun impulse in the aforementioned experiment (Finneran *et al.* 2002).

However, in order for marine mammals to experience TTS or PTS, the animals have to be close enough to be exposed to high intensity noise levels for prolonged period of time. Current NMFS standards for preventing injury from PTS and TTS is to require shutdown or power-down of noise sources when a cetacean species is detected within the isopleths corresponding to SPL at received levels equal to or higher than 180 dB re 1 μPa (rms), or a pinniped species at 190 dB re 1 μPa (rms). Based on the best scientific information available, these SPLs are far below the threshold that could cause TTS or the onset of PTS. Certain mitigation measures proposed by the Navy, discussed below, can effectively prevent the onset of TS in marine mammals, including establishing safety zones and monitoring safety zones during the training exercise.

In addition, chronic exposure to excessive, though not high-intensity, noise could cause masking at particular

frequencies for marine mammals that utilize sound for vital biological functions. Masking can interfere with detection of acoustic signals such as communication calls, echolocation sounds, and environmental sounds important to marine mammals. Therefore, like TS, marine mammals whose acoustical sensors or environment are being masked are also impaired from maximizing their performance fitness in survival and reproduction.

Masking occurs at the frequency band which the animals utilize. Therefore, since noise generated from the proposed underwater detonation and pile driving and removal is mostly concentrated at low frequency ranges, it may have less effect on species with mid- and high-frequency echolocation sounds. However, lower frequency man-made noises are more likely to affect detection of communication calls and other potentially important natural sounds such as surf and prey noise. It may also affect communication signals when they occur near the noise band used by the animals and thus reduce the communication space of animals (e.g., Clark *et al.* 2009) and cause increased stress levels (e.g., Foote *et al.* 2004; Holt *et al.* 2009).

Masking can potentially impact marine mammals at the individual, population, community, or even ecosystem levels (instead of individual levels caused by TS). Masking affects both senders and receivers of the signals and can potentially have long-term chronic effects on marine mammal species and populations in certain situations. Recent science suggests that low-frequency ambient sound levels have increased by as much as 20 dB (more than 3 times in terms of SPL) in the world's ocean from pre-industrial periods, and most of these increases are from distant shipping (Hildebrand 2009). All anthropogenic noise sources, such as those from underwater explosions and pile driving, contribute to the elevated ambient noise levels and, thus intensify masking. However, single detonations are unlikely to contribute much to masking.

Since all of the underwater detonation events and ELCAS events are planned in a very shallow water situation (wave length >> water depth), where low-frequency propagation is not efficient, the noise generated from these activities is predominantly in the low-frequency range and is not expected to contribute significantly to increased ocean ambient noise.

Finally, exposure of marine mammals to certain sounds could lead to behavioral disturbance (Richardson *et al.* 1995). Behavioral responses to exposure to sound and explosions can range from no observable response to panic, flight and possibly more significant responses as discussed previously (Richardson *et al.* 1995; Southall *et al.* 2007). These responses include: changing durations of surfacing and dives, number of blows per surfacing, or moving direction and/or speed; reduced/increased vocal activities, changing/cessation of certain behavioral activities (such as socializing or feeding); visible startle response or aggressive behavior (such as tail/fluke slapping or jaw clapping), avoidance of areas where noise sources are located, and/or flight responses (e.g., pinnipeds flushing into water from haul-outs or rookeries) (reviews by Richardson *et al.* 1995; Wartzok *et al.* 2003; Cox *et al.* 2006; Nowacek *et al.* 2007; Southall *et al.* 2007).

The biological significance of many of these behavioral disturbances is difficult to predict, especially if the detected disturbances appear minor. However, the consequences of behavioral modification could be expected to be biologically significant if the change affects growth, survival, and reproduction. Some of these significant behavioral modifications include:

- Drastic change in diving/surfacing patterns (such as those thought to be causing beaked whale stranding due to exposure to military mid-frequency tactical sonar);
- Habitat abandonment due to loss of desirable acoustic environment; and
- Cease feeding or social interaction.

For example, at the Guerreo Negro Lagoon in Baja California, Mexico, which is one of the important breeding grounds for Pacific gray whales, shipping and dredging associated with a salt works may have induced gray whales to abandon the area through most of the 1960s (Bryant *et al.* 1984). After these activities stopped, the lagoon was reoccupied, first by single whales and later by cow-calf pairs.

The onset of behavioral disturbance from anthropogenic noise depends on both external factors (characteristics of noise sources and their paths) and the receiving animals (hearing, motivation, experience, demography) and is also difficult to predict (Southall *et al.* 2007). However, the proposed action area is not believed to be a prime habitat for marine mammals, nor is it considered an area frequented by marine mammals. Therefore, behavioral disturbances that could result from anthropogenic construction noise associated with the Navy's proposed training activities are expected to affect only a small number of marine mammals on an infrequent basis.

Impacts from Underwater Detonations at Close Range

In addition to noise induced disturbances and harassment, marine mammals could be killed or injured by underwater explosions due to the impacts to air cavities, such as the lungs and bubbles in the intestines, from the shock wave (Elsayed 1997; Elsayed and Gorbunov 2007). The criterion for mortality and non-auditory injury used in MMPA take authorization is the onset of extensive lung hemorrhage and slight lung injury or ear drum rupture, respectively (see Table 3). Extensive lung hemorrhage is considered debilitating and potentially fatal as a result of air embolism or suffocation. In the Incidental Harassment Authorization application, all marine mammals within the calculated radius for 1 percent probability of onset of extensive lung injury (i.e., onset of mortality) were counted as lethal exposures. The range at which 1 percent probability of onset of extensive lung hemorrhage is expected to occur is greater than the ranges at which 50 percent to 100 percent lethality would occur from closest proximity to the charge or from presence within the bulk cavitation region. (The region of bulk cavitation is an area near the surface above the detonation point in which the reflected shock wave creates a region of cavitation within which smaller animals would not be expected to survive). Because the range for onset of extensive lung hemorrhage for smaller animals exceeds the range for bulk cavitation and all more serious injuries, all smaller animals within the region of cavitation and all animals (regardless of body mass) with more serious injuries than onset of extensive lung hemorrhage were accounted for in the lethal exposures estimate. The calculated maximum ranges for onset of extensive lung hemorrhage depend upon animal body mass, with smaller animals having the greatest potential for impact, as well as water column temperature and density.

However, due to the small detonation that would be used in the proposed SSTC training activities and the resulting small safety zones to be monitored and mitigated for marine mammals in the vicinity of the proposed action area, it is highly unlikely that marine mammals would be killed or injured by underwater detonations.

Impact Criteria and Thresholds

The effects of an at-sea explosion or pile driving on a marine mammal

depend on many factors, including the size, type, and depth of both the animal and the explosive charge/pile being driven; the depth of the water column; the standoff distance between the charge/pile and the animal; and the sound propagation properties of the environment. Potential impacts can range from brief acoustic effects (such as behavioral disturbance), tactile perception, physical discomfort, and slight injury of the internal organs and the auditory system, to death of the animal (Yelverton *et al.* 1973; O'Keeffe and Young 1984; DoN 2001). Non-lethal injury includes slight injury to internal organs and the auditory system; however, delayed lethality can be a result of individual or cumulative sub-lethal injuries (DoN 2001). Short-term or immediate lethal injury would result from massive combined trauma to internal organs as a direct result of proximity to the point of detonation or pile driving (DoN 2001).

This section summarizes the marine mammal impact criteria used for the subsequent modeled calculations. Several standard acoustic metrics (Urick 1983) are used to describe the thresholds for predicting potential physical impacts from underwater pressure waves:

- Total energy flux density or Sound Exposure Level (SEL). For plane waves (as assumed here), SEL is the time integral of the instantaneous intensity, where the instantaneous intensity is defined as the squared acoustic pressure divided by the characteristic impedance of sea water. Thus, SEL is the instantaneous pressure amplitude squared, summed over the duration of the signal and has dB units referenced to 1 re μPa^2-s.
- ⅓-octave SEL. This is the SEL in a ⅓-octave frequency band. A ⅓-octave band has upper and lower frequency limits with a ratio of 21:3, creating bandwidth limits of about 23 percent of center frequency.
- Positive impulse. This is the time integral of the initial positive pressure pulse of an explosion or explosive-like wave form. Standard units are Pa-s, but psi-ms also are used.
- Peak pressure. This is the maximum positive amplitude of a pressure wave, dependent on charge mass and range. Units used here are psi, but other units of pressure, such as μPa and Bar, also are used.

Harassment Threshold for Sequential Underwater Detonations—There may be rare occasions when sequential underwater detonations are part of a static location event. Sequential detonations are more than one detonation within a 24-hour period in a geographic location where harassment zones overlap. For sequential underwater detonations, accumulated energy over the entire training time is the natural extension for energy thresholds since energy accumulates with each subsequent shot.

For sequential underwater detonations, the acoustic criterion for behavioral harassment is used to account for behavioral effects significant enough to be judged as harassment, but occurring at lower sound energy levels than those that may cause TTS. The behavioral harassment threshold is based on recent guidance from NMFS (NMFS 2009a; 2009b) for the energy-based TTS threshold. The research on pure tone exposures reported in Schlundt *et al.* (2000) and Finneran and Schlundt (2004) provided the pure-tone threshold of 192 dB as the lowest TTS value. The resulting TTS threshold for explosives is 182 dB re 1 μPa^2-s in any ⅓ octave band. As reported by Schlundt *et al.* (2000) and Finneran and Schlundt (2004), instances of altered behavior in the pure tone research generally began 5 dB lower than those causing TTS. The behavioral harassment threshold is therefore derived by subtracting 5 dB from the 182 dB re 1 μPa^2-s in any ⅓ octave band threshold, resulting in a 177 dB re 1 μPa^2-s behavioral disturbance harassment threshold for multiple successive explosives (Table 3).

Criteria for ELCAS Pile Driving and Removal—Since 1997, NMFS has been using generic sound exposure thresholds to determine when an activity in the ocean that produces impact sound (i.e., pile driving) results in potential take of marine mammals by harassment (70 FR 1871). Current NMFS criteria (70 FR 1871) regarding exposure of marine mammals to underwater sounds is that cetaceans exposed to sound pressure levels (SPLs) of 180 dB root mean squared (dB_{rms} in units of dB re 1 μPa) or higher and pinnipeds exposed to 190 dB_{rms} or higher are considered to have been taken by Level A (i.e., injurious) harassment. Marine mammals (cetaceans and pinnipeds) exposed to impulse sounds (e.g., impact pile driving) of 160 dB_{rms} but below Level A thresholds (i.e., 180 or 190 dB) are considered to have been taken by Level B behavioral harassment. Marine mammals (cetaceans and pinnipeds) exposed to non-impulse noise (e.g., vibratory pile driving) at received levels of 120 dB RMS or above are considered to have been taken by Level B behavioral harassment (Table 3).

TABLE 3—EFFECTS CRITERIA FOR UNDERWATER DETONATIONS AND ELCAS PILE DRIVING/REMOVAL.

Criterion	Criterion Definition	Threshold
Underwater Explosive Criteria		
Mortality	Onset of severe lung injury (1 percent probability of mortality).	30.5 psi-ms (positive impulse).
Level A Harassment (Injury)	Slight lung injury; or	13.0 psi-ms (positive impulse).
	50 percent of marine mammals would experience ear drum rupture; and 30 percent exposed sustain PTS.	205 dB re 1 μPa^2-s (full spectrum energy).
Level B Harassment	TTS (dual criteria)	23 psi (peak pressure; explosives <2,000 lbs), or 182 dB re 1 μPa^2-s (peak ⅓ octave band).
	(sequential detonations only)	177 dB re 1 μPa^2-s.
Pile Driving/Removal Criteria		
Level A Harassment	Pinniped only: PTS caused by repeated exposure to received levels that cause TTS.	190 dB_{rms} re 1 μPa.
	Cetacean only: PTS caused by repeated exposure to received levels that cause TTS.	180 dB_{rms} re 1 μPa.
Level B Behavioral Harassment	Cetacean only: Impulse noise; Behavioral modification of animals.	160 dB_{rms} re 1 μPa.

TABLE 3—EFFECTS CRITERIA FOR UNDERWATER DETONATIONS AND ELCAS PILE DRIVING/REMOVAL.—Continued

Criterion	Criterion Definition	Threshold
	Pinniped only: Non-impulse noise; Behavioral modification of animals.	190 dB_{rms} re 1 μPa.

Assessing Harassment from Underwater Detonations

Underwater detonations produced during SSTC training events represent a single, known source. Chemical explosives create a bubble of expanding gases as the material detonates. The bubble can oscillate underwater or, depending on charge-size and depth, be vented to the surface in which case there is no bubble-oscillation with its associated low-frequency energy. Explosions produce very brief, broadband pulses characterized by rapid rise-time, great zero-to-peak pressures, and intense sound, sometimes described as impulse. Close to the explosion, there is a very brief, great-pressure acoustic wave-front. The impulse's rapid onset time, in addition to great peak pressure, can cause auditory impacts, although the brevity of the impulse can include less SEL than expected to cause impacts. The transient impulse gradually decays in magnitude as it broadens in duration with range from the source. The waveform transforms to approximate a low-frequency, broadband signal with a continuous sound energy distribution across the spectrum. In addition, underwater explosions are relatively brief, transitory events when compared to the existing ambient noise within the San Diego Bay and at the SSTC.

The impacts of an underwater explosion to a marine mammal are dependent upon multiple factors including the size, type, and depth of both the animal and the explosive. Depth of the water column and the distance from the charge to the animal also are determining factors as are boundary conditions that influence reflections and refraction of energy radiated from the source. The severity of physiological effects generally decreases with decreasing exposure (impulse, sound exposure level, or peak pressure) and/or increasing distance from the sound source. The same generalization is not applicable for behavioral effects, because they do not depend solely on sound exposure level. Potential impacts can range from brief acoustic effects, tactile perception, and physical discomfort to both lethal and non-lethal injuries. Disturbance of ongoing behaviors could occur as a result of non-injurious physiological responses to both the acoustic signature and shock wave from the underwater explosion. Non-lethal injury includes slight injury to internal organs and auditory system. The severity of physiological effects generally decreases with decreasing sound exposure and/or increasing distance from the sound source. Injuries to internal organs and the auditory system from shock waves and intense impulsive noise associated with explosions can be exacerbated by strong bottom-reflected pressure pulses in reverberant environments (Gaspin 1983; Ahroon *et al.* 1996). Nevertheless, the overall size of the explosives used at the SSTC is much smaller than those used during larger Fleet ship and aircraft training events.

All underwater detonations proposed for SSTC were modeled as if they will be conducted in shallow water of 24 to 72 feet, including those that would normally be conducted in very shallow water (VSW) depths of zero to 24 feet. Modeling in deeper than actual water depths causes the modeled results to be more conservative (i.e., it overestimates propagation and potential exposures) than if the underwater detonations were modeled at their actual, representative depths when water depth is less than 24 feet.

The Navy's underwater explosive effects simulation requires six major process components:

- A training event description including explosive type;
- Physical oceanographic and geoacoustic data for input into the acoustic propagation model representing seasonality of the planned operation;
- Biological data for the area including density (and multidimensional animal movement for those training events with multiple detonations);
- An acoustic propagation model suitable for the source type to predict impulse, energy, and peak pressure at ranges and depths from the source;
- The ability to collect acoustic and animal movement information to predict exposures for all animals during a training event (dosimeter record); and
- The ability for post-operation processing to evaluate the dosimeter exposure record and calculate exposure statistics for each species based on applicable thresholds.

An impact model, such as the one used for the SSTC analysis, simulates the conditions present based on location(s), source(s), and species parameters by using combinations of embedded models (Mitchell *et al.* 2008). The software package used for SSTC consists of two main parts: An underwater noise model and bioacoustic impact model (Lazauski *et al.* 1999; Lazauski and Mitchell 2006; Lazauski and Mitchell 2008).

Location-specific data characterize the physical and biological environments while exercise-specific data construct the training operations. The quantification process involves employment of modeling tools that yield numbers of exposures for each training operation. During modeling, the exposures are logged in a time-step manner by virtual dosimeters linked to each simulated animal. After the operation simulation, the logs are compared to exposure thresholds to produce raw exposure statistics. It is important to note that dosimeters only were used to determine exposures based on energy thresholds, not impulse or peak pressure thresholds. The analysis process uses quantitative methods and identifies immediate short-term impacts of the explosions based on assumptions inherent in modeling processes, criteria and thresholds used, and input data. The estimations should be viewed with caution, keeping in mind that they do not reflect measures taken to avoid these impacts (i.e., mitigations). Ultimately, the goals of this acoustic impact model were to predict acoustic propagation, estimate exposure levels, and reliably predict impacts.

Predictive sound analysis software incorporates specific bathymetric and oceanographic data to create accurate sound field models for each source type. Oceanographic data such as the sound speed profiles, bathymetry, and seafloor properties directly affect the acoustic propagation model. Depending on location, seasonal variations, and the oceanic current flow, dynamic oceanographic attributes (e.g., sound speed profile) can change dramatically with time. The sound field model is embedded in the impact model as a core feature used to analyze sound and pressure fields associated with SSTC underwater detonations.

The sound field model for SSTC detonations was the Reflection and Refraction in Multilayered Ocean/Ocean Bottoms with Shear Wave Effects (REFMS) model (version 6.03). The REFMS model calculates the combined reflected and refracted shock wave environment for underwater detonations using a single, generalized model based on linear wave propagation theory (Cagniard 1962; Britt 1986; Britt *et al.* 1991).

The model outputs include positive impulse, sound exposure level (total and in 1/3-octave bands) at specific ranges and depths of receivers (i.e., marine mammals), and peak pressure. The shock wave consists of two parts, a very rapid onset ''impulsive'' rise to positive peak over-pressure followed by a reflected negative under-pressure rarefaction wave. Propagation of shock waves and sound energy in the shallow-water environment is constrained by boundary conditions at the surface and seafloor.

Multiple locations (in Boat Lanes and Echo area) and charge depths were used to determine the most realistic spatial and temporal distribution of detonation types associated with each training operation for a representative year. Additionally, the effect of sound on an animal depends on many factors including:

- Properties of the acoustic source(s): Source level (SL), spectrum, duration, and duty cycle;
- Sound propagation loss from source to animal, as well as, reflection and refraction;
- Received sound exposure measured using well-defined metrics;
- Specific hearing;
- Exposure duration; and
- Masking effects of background and ambient noise.

To estimate exposures sufficient to be considered injury or significantly disrupt behavior by affecting the ability of an individual animal to grow (e.g., feeding and energetics), survive (e.g., behavioral reactions leading to injury or death, such as stranding), reproduce (e.g., mating behaviors), and/or degrade habitat quality resulting in abandonment or avoidance of those areas, dosimeters were attached to the virtual animals during the simulation process. Propagation and received impulse, SEL, and peak pressure are a function of depth, as well as range, depending on the location of an animal in the simulation space.

A detailed discussion of the computational process for the modeling, which ultimately generates two outcomes—the zones of influence (ZOIs) and marine mammal exposures, is presented in the Navy's IHA application.

Severity of an effect often is related to the distance between the sound source and a marine mammal and is influenced by source characteristics (Richardson and Malme 1995). For SSTC, ZOIs were estimated for the different charge weights, charge depths, water depths, and seasons using the REFMS model as described previously. These ZOIs for SSTC underwater detonations by training event are shown in Table 4 and conceptually illustrated in Figure 6–5 in the Navy's IHA application.

For single detonations, the ZOIs were calculated using the range associated with the onset of TTS based on the Navy REFMS model predictions.

For Multiple Successive Explosive events (i.e., sequential detonations) ZOI calculation was based on the range to non-TTS behavior disruption. Calculating the zones of influence in terms of total SEL, 1/3-octave bands SEL, impulse, and peak pressure for sequential (10 sec timed) and multiple controlled detonations (>30 minutes) were slightly different than the single detonations. For the sequential detonations, ZOI calculations considered spatial and temporal distribution of the detonations, as well as the effective accumulation of the resultant acoustic energy. To calculate the ZOI, sequential detonations were modeled such that explosion SEL were summed incoherently to predict zones while peak pressure was not.

TABLE 4—MAXIMUM ZOIS FOR UNDERWATER DETONATION EVENTS AT THE SSTC

Underwater detonation training event	Season*	Maximum ZOI (yards)				
		TTS		Injury		Mortality
		23 psi	182 dB re 1 μPa²-s	13.0 psi-ms	205 dB re 1 μPa²-s	30.5 psi-ms
Shock wave action generator (SWAG) (San Diego Bay—Echo sub-area) 0.033 NEW (74/yr).	Warm	60	20	0	0	0
	Cold	40	20	0	0	0
Shock wave action generator (SWAG) (SSTC—North and South oceanside) 0.033 NEW (16/yr).	Warm	60	20	0	0	0
	Cold	40	20	0	0	0
Mine Counter Measure < 20 lbs NEW (29/yr)	Warm	470	300	360	80	80
	Cold	450	340	160	80	80
Floating Mine < 5 lbs NEW (53/yr)	Warm	240	160	80	40	20
	Cold	260	180	80	40	20
Dive Platoon < 3.5 lbs NEW (sequential) (8/yr).	Warm	210	330	80	90	50
	Cold	220	370	90	90	50
Unmanned Underwater Vehicle <15 lbs NEW (4/yr).	Warm	440	280	360	80	80
	Cold	400	320	150	80	80
Marine Mammal Systems < 29 lbs NEW (sequential) (8/yr).	Warm	380	420	360	140	90
	Cold	450	470	170	140	90
Marine Mammal Systems < 29 lbs NEW (8/yr).	Warm	400	330	360	100	90
	Cold	490	370	170	100	90
Mine Neutralization < 3.5 lbs NEW (sequential) (4/yr).	Warm	210	330	80	90	50
	Cold	230	370	90	90	50

TABLE 4—MAXIMUM ZOIS FOR UNDERWATER DETONATION EVENTS AT THE SSTC—Continued

Underwater detonation training event	Season*	Maximum ZOI (yards)				
		TTS		Injury		Mortality
		23 psi	182 dB re 1 μPa²-s	13.0 psi-ms	205 dB re 1 μPa²-s	30.5 psi-ms
Surf Zone Training and Evaluation < 20 lbs NEW (2/yr).	Warm	470	300	160	80	80
	Cold	450	340	160	80	80
Unmanned Underwater Vehicle Neutralization < 3.6 lbs NEW (sequential) (4/yr).	Warm	220	180	80	60	50
	Cold	230	180	90	60	50
Airborne Mine Neutralization System < 3.5 lbs NEW (10/yr).	Warm	220	170	80	40	40
	Cold	230	180	80	40	40
Qualification/Certification < 13.8 lbs NEW (sequential) (8/yr).	Warm	330	330	140	100	80
	Cold	360	370	140	100	80
Qualification/Certification < 25.5 lbs NEW (4/yr).	Warm	420	330	300	90	90
	Cold	470	360	170	90	90
Naval Special Warfare Demolition Training < 10 lbs NEW (4/yr).	Warm	360	240	160	80	40
	Cold	360	250	160	80	40
Naval Special Warfare Demolition Training < 3.6 lbs NEW (4/yr).	Warm	220	180	80	60	50
	Cold	230	180	90	60	50
Navy Special Warfare SEAL Delivery Vehicle < 10 lbs NEW (40/yr).	Warm	360	240	160	80	40
	Cold	360	250	160	80	40

* Warm: November–April; cold: May–October.

In summary, all ZOI radii were strongly influenced by charge size and placement in the water column, and only slightly by the environment variables. Detailed information on ZOI determination for very shallow water is provided in section 6 of the Navy's LOA application.

The anticipated impacts from marine mammal exposure to explosive detonations and pile-driving remain unchanged from the IHA issued to the Navy in 2012 (77 FR 43238, July 24, 2012).

Proposed Mitigation Measures

In order to issue an incidental take authorization under section 101(a)(5)(D) of the MMPA, NMFS must set forth the permissible methods of taking pursuant to such activity, and other means of effecting the least practicable adverse impact on such species or stock and its habitat, paying particular attention to rookeries, mating grounds, and areas of similar significance, and on the availability of such species or stock for taking for certain subsistence uses.

The take estimates provided later in this document represent the maximum expected number of takes and do not account for mitigation measures. The Navy proposes the following mitigation measures to reduce potential impacts to marine mammals:

Mitigation Zones

The Navy used the ZOI modeling results (discussed in Chapter 6 of their IHA application) to develop mitigation zones for underwater detonations in water >24 feet and Shock Wave Generator (SWAG) training events. While the ZOIs vary between the different types of underwater detonation training, the Navy is proposing to establish an expanded 700 yard mitigation zone for all positive control (RFD) underwater detonations conducted on the oceanside of the SSTC, a 700–1,500 yard mitigation zone around all time-delay (TDFD) underwater detonations conducted on the oceanside of the SSTC, and a 60 yard mitigation zone around SWAG training events conducted on the oceanside and bayside of the SSTC. Details on how the mitigation zones were derived are provided in section 11 of the Navy's IHA application. These mitigation zones are expected to reduce or eliminate Level B harassment to marine mammals. The Navy also proposes a 50 yard mitigation zone during ELCAS pile driving and removal. In summary, the proposed mitigation zones are as follows for the three broad sets of training events:

Very shallow water (<24 feet) underwater detonation—The Navy would use a 700 yard mitigation zone for positive control events, and 700–1,500 yard mitigation zone for TDFD events depending on charge weight and delay time. The positive control mitigation zone is based on the maximum range of onset TTS as predicted by the iso-velocity analysis of empirically measured very shallow water detonations <20 lbs NEW (450–470 yards) plus a buffer that brings the final zone to 700 yards.

Shallow water (>24 feet) underwater detonation—The Navy would use a 700 yard mitigation zone for positive control events, and 700–1,500 yard mitigation zone for TDFD events depending on charge weight and delay time. The positive control mitigation zone is based on the maximum range to onset TTS predicted using the Navy's REFMS model (490 yards) plus a buffer that brings the final zone to 700 yards.

ELCAS pile driving and removal—The Navy would use a 50 yard mitigation zone based on the maximum range estimated to the Level A harassment criteria for cetaceans (180 dB).

Proposed Mitigation Measures for Underwater Detonations in Very Shallow Water (VSW, water depth <24 ft)

Positive Control

1. Underwater detonations using positive control (remote firing devices) will only be conducted during daylight.

2. Easily visible anchored floats will be positioned on 700 yard radius of a roughly semi-circular zone (the

shoreward half being bounded by shoreline and immediate offshore water) around the detonation location for small explosive exercises at the SSTC. These mark the outer limits of the mitigation zone.

3. For each VSW underwater detonation event, a safety-boat with a minimum of one observer is launched 30 or more minutes prior to detonation and moves through the area around the detonation site. The task of the safety observer is to exclude humans from coming into the area and to augment a shore observer's visual search of the mitigation zone for marine mammals. The safety-boat observer is in constant radio communication with the exercise coordinator and shore observer discussed below.

4. A shore-based observer will also be deployed for VSW detonations in addition to boat based observers. The shore observer will indicate that the area is clear of marine mammals after 10 or more minutes of continuous observation with no marine mammals having been seen in the mitigation zone or moving toward it.

5. At least 10 minutes prior to the planned initiation of the detonation event-sequence, the shore observer, on an elevated on-shore position, begins a continuous visual search with binoculars of the mitigation zone. At this time, the safety-boat observer informs the shore observer if any marine mammal has been seen in the zone and, together, both search the surface within and beyond the mitigation zone for marine mammals.

6. The observers (boat and shore based) will indicate that the area is not clear any time a marine mammal is sighted in the mitigation zone or moving toward it and, subsequently, indicate that the area is clear of marine mammals when the animal is out and moving away and no other marine mammals have been sited.

7. Initiation of the detonation sequence will only begin on final receipt of an indication from the shore observer that the area is clear of marine mammals and will be postponed on receipt of an indication from any observer that the area is not clear of marine mammals.

8. Following the detonation, visual monitoring of the mitigation zone continues for 30 minutes for the appearance of any marine mammal in the zone. Any marine mammal appearing in the area will be observed for signs of possible injury.

9. Any marine mammal observed after a VSW underwater detonation either injured or exhibiting signs of distress will be reported via operational chain of command to Navy environmental representatives from U.S. Pacific Fleet, Environmental Office, San Diego Detachment. Using Marine Mammal Stranding communication trees and contact procedures established for the Southern California Range Complex, the Navy will report these events to the Stranding Coordinator of NMFS' Southwest Regional Office. These voice or email reports will contain the date and time of the sighting, location (or if precise latitude and longitude is not currently available, then the approximate location in reference to an established SSTC beach feature), species description (if known), and indication of the animal's status.

Time-Delay Firing Devices

1. Underwater detonations using timed delay devices would only be conducted during daylight.

2. Time-delays longer than 10 minutes would not be used. The initiation of the device will not start until the mitigation area below is clear for a full 30 minutes prior to initiation of the timer.

3. A mitigation zone would be established around each underwater detonation location as indicated in Table 7 (1,000, 1,400 yards, or 1,500) based on charge weight and length of time delay used.

4. VSW ranges 1,000 yds:

- For each VSW underwater detonation event with a mitigation zone of 1,000 yds, a safety boat with a minimum of one observer is launched 30 or more minutes prior to detonation and moves through the area around the detonation site at the seaward edge of the mitigation zone. The task of the boat is to exclude humans from coming into the area and to augment a shore observer's visual search of the mitigation zone for marine mammals. The safety-boat observer is in constant radio communication with the exercise coordinator and shore observer discussed below. To the best extent practical, boats will try to maintain a 10 knot search speed.
- A shore-based observer will also be deployed for VSW detonations in addition to boat based observers. At least 10 minutes prior to the planned initiation of the detonation event-sequence, the shore observer, on an elevated on-shore position, begins a continuous visual search with binoculars of the mitigation zone. At this time, the safety-boat observer informs the shore observer if any marine mammal has been seen in the zone and, together, both search the surface within and beyond the mitigation zone for marine mammals. The shore observer will indicate that the area is clear of marine mammals after 10 or more minutes of continuous observation with no marine mammals having been seen in the mitigation zone or moving toward it.

5. VSW ranges ≥1,400 yards:

- A minimum of two boats and one shore-based observer would be used to survey for marine mammals at mitigation ranges ≥1,400 yards.
- When conducting the surveys within a mitigation zone ≥1,400 yds, boats will position themselves near the mid-point of the mitigation zone radius (but always outside the detonation plume radius/human safety zone) and travel in a semi-circular pattern around the detonation location surveying both the inner (toward detonation site) and outer (away from detonation site) areas. When using two boats, each boat will be positioned on opposite sides of the detonation location, separated by 180 degrees. If using more than two boats, each boat will be positioned equidistant from one another (120 degrees separation for three boats, 90 degrees separation for four boats, etc.). If available, aerial visual survey support from Navy helicopters can be utilized, so long as it will not jeopardize safety of flight. Helicopters will travel in a circular pattern around the detonation location.

6. A mitigation zone will be surveyed from 30 minutes prior to the detonation and for 30 minutes after the detonation.

7. Other personnel besides boat observers can also maintain situational awareness on the presence of marine mammals within the mitigation zone to the best extent practical given dive safety considerations.

Divers placing the charges on mines will observe the immediate underwater area around a detonation site for marine mammals and report sightings to surface observers.

8. If a marine mammal is sighted within an established mitigation zone or moving towards it, underwater detonation events will be suspended until the marine mammal has voluntarily left the area and the area is clear of marine mammals for at least 30 minutes.

9. Immediately following the detonation, visual monitoring for affected marine mammals within the mitigation zone will continue for 30 minutes.

10. Any marine mammal observed after an underwater detonation either injured or exhibiting signs of distress will be reported via Navy operational chain of command to Navy environmental representatives from U.S. Pacific Fleet, Environmental Office, San Diego Detachment. Using Marine

Mammal Stranding communication trees and contact procedures established for the Southern California Range Complex, the Navy will report these events to the Stranding Coordinator of NMFS' Southwest Regional Office. These voice or email reports will contain the date and time of the sighting, location (or if precise latitude and longitude is not currently available, then the approximate location in reference to an established SSTC beach feature), species description (if known), and indication of the animal's status.

Proposed Mitigation and Monitoring Measures for Underwater Detonations in Shallow Water (>24 Feet)

Positive Control (Except SWAG and Timed Detonations)

1. Underwater detonations using positive control devices would only be conducted during daylight.

2. A mitigation zone of 700 yards would be established around each underwater detonation point.

3. A minimum of two boats, including but not limited to small zodiacs and 7-m Rigid Hulled Inflatable Boats (RHIB) would be deployed. One boat would act as an observer platform, while the other boat is typically the diver support boat.

4. Two observers with binoculars on one small craft/boat would survey the detonation area and the mitigation zone for marine mammals from at least 30 minutes prior to commencement of the scheduled explosive event and until at least 30 minutes after detonation.

5. In addition to the dedicated observers, all divers and boat operators engaged in detonation events can potentially monitor the area immediately surrounding the point of detonation for marine mammals.

6. Explosive detonations would cease if a marine mammal is visually detected within the mitigation zone. Detonations may recommence if any of the following conditions are met: (1) The animal is observed exiting the mitigation zone, (2) the animal is thought to have exited the mitigation zone based on its course and speed, or (3) the mitigation zone has been clear from any additional sightings for a period of 30 minutes.

7. Immediately following the detonation, visual monitoring for marine mammals within the mitigation zone will continue for 30 minutes. Any marine mammal observed after an underwater detonation either injured or exhibiting signs of distress will be reported to via Navy operational chain of command to Navy environmental representatives from U.S. Pacific Fleet, Environmental Office, San Diego Detachment. Using Marine Mammal Stranding communication trees and contact procedures established for the Southern California Range Complex, the Navy will report these events to the Stranding Coordinator of NMFS' Southwest Regional Office. These voice or email reports will contain the date and time of the sighting, location (or if precise latitude and longitude is not currently available, then the approximate location in reference to an established SSTC beach feature), species description (if known), and indication of the animals status.

Mitigation and Monitoring Measures for Underwater Detonations Using Time-Delay (TDFD Detonations Only)

1. Underwater detonations using timed delay devices would only be conducted during daylight.

2. Time-delays longer than 10 minutes would not be used. The initiation of the device would not start until the mitigation area below is clear for a full 30 minutes prior to initiation of the timer.

3. A mitigation zone would be established around each underwater detonation location as indicated in Table 3 based on charge weight and length of time-delay used. When conducting the surveys within a mitigation zone (either 1,000 or ≥1,400 yds), boats will position themselves near the mid-point of the mitigation zone radius (but always outside the detonation plume radius/human safety zone) and travel in a circular pattern around the detonation location surveying both the inner (toward detonation site) and outer (away from detonation site) areas.

4. Shallow water TDFD detonations 1,000 yds:

- A minimum of two boats would be used to survey for marine mammals at mitigation ranges of 1,000 yds.
- When using two boats, each boat would be positioned on opposite sides of the detonation location, separated by 180 degrees.
- Two observers in each of the boats will conduct continuous visual survey of the mitigation zone for the entire duration of a training event.
- To the best extent practical, boats will try to maintain a 10 knot search speed. This search speed was added to ensure adequate coverage of the buffer zone during observation periods. While weather conditions and sea states may require slower speeds in some instances, 10 knots is a prudent, safe, and executable speed that will allow for adequate surveillance. For a 1,000 yd radius buffer zone a boat travelling at 10 knots and 500 yds away from the detonation point would circle the detonation point 3.22 times during a 30 minute survey period. By using two boats, 6.44 circles around the detonation point would be completed in a 30 minute span.

5. Shallow water TDFD detonations ≥1,400 yds:

- A minimum of three boats or two boats and one helicopter would be used to survey for marine mammals at mitigation ranges of 1,400 yds.
- When using three (or more) boats, each boat would be positioned equidistant from one another (120 degrees separation for three boats, 90 degrees separation for four boats, etc.).
- For a 1,400 yd radius mitigation zone, a 10 knot speed results in 2.3 circles for each of the three boats, or nearly 7 circles around the detonation point over a 30 minute span.
- If available, aerial visual survey support from Navy helicopters can be utilized, so long as it will not jeopardize safety of flight.
- Helicopters, if available, can be used in lieu of one of the boat requirements. Navy helicopter pilots are trained to conduct searches for relatively small objects in the water, such as a missing person. A helicopter search pattern is dictated by standard Navy protocols and accounts for multiple variables, such as the size and shape of the search area, size of the object being searched for, and local environmental conditions, among others.

6. A mitigation zone would be surveyed from 30 minutes prior to the detonation and for 30 minutes after the detonation.

7. Other personnel besides boat observers can also maintain situational awareness on the presence of marine mammals within the mitigation zone to the best extent practical given dive safety considerations.

Divers placing the charges on mines would observe the immediate underwater area around a detonation site for marine mammals and report sightings to surface observers.

8. If a marine mammal is sighted within an established mitigation zone or moving towards it, underwater detonation events will be suspended until the marine mammal has voluntarily left the area and the area is clear of marine mammals for at least 30 minutes.

9. Immediately following the detonation, visual monitoring for affected marine mammals within the mitigation zone will continue for 30 minutes.

10. Any marine mammal observed after an underwater detonation either

injured or exhibiting signs of distress will be reported via Navy operational chain of command to Navy environmental representatives from U.S. Pacific Fleet, Environmental Office, San Diego Detachment or Pearl Harbor. Using Marine Mammal Stranding protocols and communication trees established for the Southern California and Hawaii Range Complexes, the Navy will report these events to the Stranding Coordinator of NMFS' Southwest or Pacific Islands Regional Office. These voice or email reports will contain the date and time of the sighting, location (or if precise latitude and longitude is not currently available, then the approximate location in reference to an established SSTC beach feature), species description (if known), and indication of the animal's status.

(3) Proposed Mitigation and Monitoring Measures for Underwater SWAG Detonations (SWAG Only)

A modified set of mitigation measures would be implemented for SWAG detonations, which involve much smaller charges of 0.03 lbs NEW.

1. Underwater detonations using SWAG would only be conducted during daylight.
2. A mitigation zone of 60 yards would be established around each SWAG detonation site.
3. A minimum of two boats, including but not limited to small zodiacs and 7-m Rigid Hulled Inflatable Boats (RHIB) would be deployed. One boat would act as an observer platform, while the other boat is typically the diver support boat.
4. Two observers with binoculars on one small craft\boat would survey the detonation area and the mitigation zone for marine mammals from at least 10 minutes prior to commencement of the scheduled explosive event and until at least 10 minutes after detonation.
5. In addition to the dedicated observers, all divers and boat operators engaged in detonation events can potentially monitor the area immediately surrounding the point of detonation for marine mammals.

Divers and personnel in support boats would monitor for marine mammals out to the 60 yard mitigation zone for 10 minutes prior to any detonation.

6. After the detonation, visual monitoring for marine mammals would continue for 10 minutes. Any marine mammal observed after an underwater detonation either injured or exhibiting signs of distress will be reported via Navy operational chain of command to Navy environmental representatives from U.S. Pacific Fleet, Environmental Office, San Diego Detachment. Using Marine Mammal Stranding communication trees and contact procedures established for the Southern California Range Complex, the Navy will report these events to the Stranding Coordinator of NMFS' Southwest Regional Office. These voice or email reports will contain the date and time of the sighting, location (or if precise latitude and longitude is not currently available, then the approximate location in reference to an established SSTC beach feature), species description (if known), and indication of the animal's status.

Proposed Mitigation for ELCAS Training

- Mitigation zone—A mitigation zone would be established at 50 yards from ELCAS pile driving and removal events. This mitigation zone is based on the predicted range to Level A harassment for cetaceans (180 dB) and would also be applied to pinnipeds.
- Monitoring would be conducted within the 50 yard mitigation zone for the presence of marine mammals during ELCAS pile driving and removal events. Monitoring would begin 30 minutes before any ELCAS pile driving or removal event, continue during pile driving or removal events, and be conducted for 30 minutes after pile driving or removal ends. A minimum of one trained observer would be placed on shore, on the ELCAS, or in a boat at the best vantage point(s) to monitor for marine mammals.
- If a marine mammal is seen within the 50 yard mitigation zone, pile removal events would be delayed or stopped until the animal has voluntarily left the mitigation zone.
- The observer(s) would implement shutdown and delay procedures when applicable by notifying the hammer operator when a marine mammal is seen within the mitigation zone.
- Soft start–The Navy would implement a soft start for all ELCAS pile driving. The pile driver would increase impact strength as resistance goes up. The pile driver piston initially drops a few inches, but as resistance increases, the pile driver piston drops from a higher distance and has more impact. This would allow marine mammals in the proposed action area to move away from the sound source before the pile driver reaches full power.

Proposed Monitoring and Reporting

In order to issue an ITA for an activity, section 101(a)(5)(D) of the MMPA states that NMFS must set forth, where applicable, ''requirements pertaining to the monitoring and reporting of such taking.'' The MMPA implementing regulations at 50 CFR 216.104(a)(13) indicate that requests for ITAs must include the suggested means of accomplishing the necessary monitoring and reporting that will result in increased knowledge of the species and of the level of taking or impacts on populations of marine mammals that are expected to be present in the proposed action area.

In addition to the mitigation monitoring described above, the Navy also proposes to monitor a subset of SSTC underwater detonation events to validate the Navy's pre- and post-event mitigation effectiveness, and observe marine mammal reaction, or lack of reaction to SSTC training events. The Navy also proposes to conduct an acoustic monitoring project during the first field deployment of the ELCAS.

Monitoring a Subset of Underwater Detonations

Protected species observers would be placed either alongside existing Navy SSTC operators during a subset of training events, or on a separate small boat viewing platform. Use of protected species observers would verify Navy mitigation efforts within the SSTC, offer an opportunity for more detailed species identification, provide an opportunity to bring animal protection awareness to Navy personnel at the SSTC, and provide the opportunity for an experienced biologist to collect data on marine mammal behavior. Events selected for protected species observer participation would be an appropriate fit in terms of security, safety, logistics, and compatibility with Navy underwater detonation training. The Navy would attempt to monitor between 2 and 4 percent of their annual underwater detonations (6–12 detonations). Protected species observers would collect the same data currently being collected for more elaborate offshore ship-based observations, including but not limited to:

- Location of sighting;
- Species;
- Number of individuals;
- Number of calves present;
- Duration of sighting;
- Behavior of marine mammals sighted;
- Direction of travel;
- Environmental information associated with sighting event, including Beaufort sea state, wave height, swell direction, wind direction, wind speed, glare, percentage of glare, percentage of cloud cover; and
- Whether the sighting occurred before, during, or after a detonation.

Protected species observers would not be part of the Navy's formal reporting

chain of command during their data collection efforts. However, exceptions would be made if a marine mammal is observed within the proposed mitigation zone. Protected species observers would inform any Navy operator of the sighting so that appropriate action may be taken.

ELCAS Underwater Propagation Monitoring

The Navy proposes to conduct an underwater acoustic propagation monitoring project during the first available ELCAS deployment at the SSTC. The acoustic monitoring would provide empirical field data on actual ELCAS pile driving and removal underwater source levels, and propagation specific to ELCAS training at the SSTC. These results would be used to either confirm or refine the Navy's exposure predictions.

Reporting

In order to issue an ITA for an activity, section 101(a)(5)(A) of the MMPA states that NMFS must set forth ''requirements pertaining to the monitoring and reporting of such taking.'' Effective reporting is critical both to compliance as well as ensuring that the most value is obtained from the required monitoring.

General Notification of Injured or Dead Marine Mammals—Navy personnel would ensure that NMFS (the appropriate Regional Stranding Coordinator) is notified immediately (or as soon as clearance procedures allow) if an injured or dead marine mammal is found during or shortly after, and in the vicinity of, any Navy training exercises involving underwater detonations or pile driving. The Navy shall provide NMFS with species or description of the animal(s), the conditions of the animal(s) (including carcass condition if the animal is dead), location, time of first discovery, observed behaviors (if alive), and photo or video (if available).

The Navy shall submit a report to the Office of Protected Resources, NMFS, no later than 90 days after the expiration of the IHA. The report shall, at a minimum, include the following marine mammal sighting information:

- Location of sighting;
- Species;
- Number of individuals;
- Number of calves present;
- Duration of sighting;
- Behavior of marine mammals sighted;
- Direction of travel;
- Environmental information associated with each sighting event, including Beaufort sea state, wave height, swell direction, wind direction, wind speed, glare, percentage of glare, percentage of cloud cover; and
- Whether the sighting occurred before, during, or after a detonation.

In addition, the Navy would provide information for all underwater detonation events and ELCAS events under the IHA. This information would include: total number of each type of underwater detonation events and total number of piles driven/extracted during ELCAS.

The Navy would submit a draft report to NMFS, as described above, and would respond to NMFS comments within 3 months of receipt. The report would be considered final after the Navy has addressed NMFS' comments, or 3 months after the submittal of the draft if NMFS does not comment by then.

Past Monitoring and Reporting

The Navy has complied with monitoring and reporting requirements under their previous IHAs for the SSTC. To date, two underwater demolition training events have been observed by protected species observers between July 2012 and November 2012. Broad scale Navy-funded monitoring in support of the Navy's Southern California (SOCAL) Range Complex Letter of Authorization has typically focused on the offshore waters north and west of the SSTC. The Navy obtained special flight permission to survey the vicinity of the SSTC during part of three aerial surveys under the SOCAL monitoring plan in 2011–2012. As anticipated, marine mammal sightings were limited and included several California sea lions and a few unidentified dolphins, although the dolphin sightings were several miles offshore from the normal SSTC training area.

Estimated Take by Incidental Harassment

Estimated Marine Mammal Exposures from SSTC Underwater Detonations

The Navy's quantitative exposure modeling methodology estimated numbers of animals exposed to the effects of underwater detonations exceeding the thresholds used, as if no mitigation measures were employed. All estimated exposures are seasonal averages (mean) plus one standard deviation using half of the annual training tempo to represent each season. This approach results in an over-prediction of exposure to typical training during a single year. Table 5 shows the number of annual predicted exposures by species for all underwater detonation training within the SSTC. As stated previously, only events with sequential detonations were examined for non-TTS behavior disruption. For all underwater detonations, the Navy's impact model predicted no marine mammal mortality and no Level A exposure to any species.

TABLE 5—THE NAVY'S MODELED ESTIMATES OF SPECIES EXPOSED TO UNDERWATER DETONATIONS WITHOUT IMPLEMENTATION OF MITIGATION MEASURES

Species	Annual Marine Mammal Exposure (All Sources)			
	Level B Behavior (Multiple Successive Explosive Events Only)	Level B TTS	Level A	Mortality
	177 dB re 1 μPa	182 dB re 1 μPa^2-s/ 23 psi	205 dB re 1 μPa^2-s/ 13.0 psi-ms	30.5 psi-ms
Gray Whale:				
Warm	N/A	N/A	N/A	N/A
Cold	0	0	0	0
Bottlenose Dolphin:				
Warm	30	43	0	0
Cold	40	55	0	0
California Sea Lion:				
Warm	4	4	0	0
Cold	40	51	0	0
Harbor Seal:				

TABLE 5—THE NAVY'S MODELED ESTIMATES OF SPECIES EXPOSED TO UNDERWATER DETONATIONS WITHOUT IMPLEMENTATION OF MITIGATION MEASURES—Continued

Species	Annual Marine Mammal Exposure (All Sources)			
	Level B Behavior (Multiple Successive Explosive Events Only)	Level B TTS	Level A	Mortality
	177 dB re 1 μPa	182 dB re 1 μPa²-s/ 23 psi	205 dB re 1 μPa²-s/ 13.0 psi-ms	30.5 psi-ms
Warm	0	0	0	0
Cold	0	0	0	0
Long-beaked common dolphin:				
Warm	14	21	0	0
Cold	7	10	0	0
Pacific white-sided dolphin:				
Warm	2	3	0	0
Cold	3	4	0	0
Risso's dolphin:				
Warm	3	4	0	0
Cold	11	15	0	0
Short-beaked common dolphin:				
Warm	123	177	0	0
Cold	62	86	0	0
Total Annual Exposures	339	473	0	0

Estimated Marine Mammal Exposures From ELCAS Pile Driving and Removal

I. Pile Driving

Using the marine mammal densities presented in the Navy's IHA application, the number of animals exposed to annual Level B harassment from ELCAS pile driving can be estimated. A couple of business rules and assumptions are used in this determination:

1. Pile driving is estimated to occur 10 days per ELCAS training event, with up to four training exercises being conducted per year (40 days per year). Given likely variable training schedules, an assumption was made that approximately 20 of these 40 days would occur during the warm water season, and 20 of the 40 days would occur during the cold water season.

2. To be more conservative even to the point of over predicting likely exposures, the Navy asserts that during the calculation there can be no ''fractional'' exposures of marine mammals on a daily basis, and all exposure values are rounded up during the calculation.

To estimate the potential ELCAS pile driving exposure, the following expression is used:

Annual exposure = ZOI × warm season marine mammal density × warm season pile driving days + ZOI × cold season marine mammal density × cold season pile driving days, with ZOI = $\pi \times R^2$, where R is the radius of the ZOI.

An example showing the take calculation for bottlenose dolphins, with the conservative ''daily rounding up'' business rule (#2 above), is shown below:

Daily exposure = $\pi \times 0.999^2 \times 0.202 + \pi \times 0.999^2 \times 0.202 = 0.6 + 0.6$.

When rounding up the daily exposure 0.6 dolphin to 1 dolphin; the annual exposure from warm season pile driving days (20 days) and cold season pile driving days (20 days) is:

Annual exposure = $1 \times 20 + 1 \times 20 = 40$

Based on the assessment using the methodology discussed previously, applying the business rules and limitations described here, and without consideration of mitigation measures, the take estimate is that ELCAS pile driving is predicted to result in no Level A Harassment takes of any marine mammal (received SPL of 190 dB_{rms} for pinnipeds and 180 dB_{rms} re 1 μPa for cetacean, respectively) but take of 40 bottlenose dolphins, 20 California sea lions, and 80 short-beaked common dolphins by Level B behavioral harassment (Table 5).

II. Pile Removal

The same approach is applied for take estimation from ELCAS pile removal. To estimate the potential ELCAS pile removal exposure, the following expression is used:

Annual exposure = ZOI × warm season marine mammal density × warm season pile removal days + ZOI × cold season marine mammal density × cold season pile removal days, with ZOI = $\pi \times R^2$, where R is the radius of the ZOI.

An example showing the take calculation for bottlenose dolphins, with the conservative ''daily rounding up'' business rule for pile removal, is shown below:

Daily exposure = $\pi \times 4.64^2 \times 0.202 + \pi \times 4.64^2 \times 0.202 = 13.7 + 13.7$.

When rounding up the daily exposure 13.7 dolphins to 14 dolphins; the annual exposure from warm season pile removal days (6 days) and cold season pile removal days (6 days) is:

Annual exposure = $14 \times 6 + 14 \times 6 = 168$

Based on the assessment using the methodology discussed previously, applying the methods and limitations described here, and without consideration of mitigation measures, the take estimate is that ELCAS pile removal is predicted to result in no Level A Harassments takes of any marine mammal; Level B exposures are shown in Table 6.

TABLE 6—EXPOSURE ESTIMATES FROM ELCAS PILE DRIVING AND REMOVAL PRIOR TO IMPLEMENTATION OF MITIGATION

Species	Annual marine mammal exposure (all sources)			
	Level B Behavior (Non-Impulse) 120 dB_{rms} re 1 μPa	Level B Behavior (Impulse) 120 dB_{rms} re 1 μPa	Level A (Cetacean) 120 dB_{rms} re 1 μPa	Level A (Pinniped) 120 dB_{rms} re 1 μPa
Gray Whale				
Installation	N/A	0	0	0
Removal	6	N/A	0	0
Bottlenose Dolphin				
Installation	N/A	40	0	0
Removal	168	N/A	0	0
California Sea Lion				
Installation	N/A	20	0	0
Removal	102	N/A	0	0
Harbor Seal				
Installation	N/A	0	0	0
Removal	12	N/A	0	0
Long-beaked common dolphin				
Installation	N/A	0	0	0
Removal	54	N/A	0	0
Pacific white-sided dolphin				
Installation	N/A	0	0	0
Removal	12	N/A	0	0
Risso's dolphin				
Installation	N/A	0	0	0
Removal	30	N/A	0	0
Short-beaked common dolphin				
Installation	N/A	80	0	0
Removal	462	N/A	0	0
Total Annual Exposures	846	140	0	0

In summary, for all underwater detonations and ELCAS pile driving activities, the Navy's impact model predicted that no mortality and/or Level A harassment (injury) would occur to marine mammal species and stocks within the proposed action area.

Anticipated Effects on Habitat

The proposed training activities at SSTC would not result in any permanent impact on habitats used by marine mammals, and potentially short-term to minimum impact to the food sources such as forage fish. There are no known haul-out sites, foraging hotspots, or other ocean bottom structures of significant biological importance to harbor seals, California sea lions, or bottlenose dolphins within SSTC. Therefore, the main impact associated with the proposed activity would be temporarily elevated noise levels and the associated direct effects on marine mammals, as discussed previously.

The primary source of effects to marine mammal habitat is exposures resulting from underwater detonation training and ELCAS pile driving and removal training events. Other sources that may affect marine mammal habitat include changes in transiting vessels, vessel strike, turbidity, and introduction of fuel, debris, ordnance, and chemical residues. However, each of these components was addressed in the SSTC Environmental Impact Statement (EIS) and it is the Navy's assertion that there would be no likely impacts to marine mammal habitats from these training events.

The most likely impact to marine mammal habitat occurs from underwater detonation and pile driving and removal effects on likely marine mammal prey (i.e., fish) within SSTC. There are currently no well-established thresholds for estimating effects to fish from explosives other than mortality models. Fish that are located in the water column, in proximity to the source of detonation could be injured, killed, or disturbed by the impulsive sound and could leave the area temporarily. Continental Shelf Inc. (2004) summarized a few studies conducted to determine effects associated with removal of offshore structures (e.g., oil rigs) in the Gulf of Mexico. Their findings revealed that at very close range, underwater explosions are lethal to most fish species regardless of size, shape, or internal anatomy. In most situations, cause of death in fish has been massive organ and tissue damage and internal bleeding. At longer range, species with gas-filled swimbladders (e.g., snapper, cod, and striped bass) are more susceptible than those without swimbladders (e.g., flounders, eels).

Studies also suggest that larger fish are generally less susceptible to death or injury than small fish. Moreover, elongated forms that are round in cross section are less at risk than deep-bodied forms. Orientation of fish relative to the shock wave may also affect the extent of injury. Open water pelagic fish (e.g., mackerel) seem to be less affected than reef fishes. The results of most studies are dependent upon specific biological, environmental, explosive, and data recording factors.

The huge variation in fish populations, including numbers, species, sizes, and orientation and range from the detonation point, makes it very difficult to accurately predict mortalities at any specific site of detonation. All underwater detonations are of small scale (under 29 lbs NEW), and the proposed training exercises would be conducted in several areas within the large SSTC Study Area over the seasons during the year. Most fish species experience a large number of natural mortalities, especially during early life-stages, and any small level of mortality caused by the SSTC training exercises involving explosives will likely be insignificant to the population as a whole.

Therefore, potential impacts to marine mammal food resources within the SSTC are expected to be minimal given both the very geographic and spatially

limited scope of most Navy at-sea activities including underwater detonations, and the high biological productivity of these resources. No short or long term effects to marine mammal food resources from Navy activities are anticipated within the SSTC.

Subsistence Harvest of Marine Mammals

NMFS has preliminarily determined that the Navy's proposed training activities at the SSTC would not have an unmitigable adverse impact on the availability of the affected species or stocks for subsistence use since there are no such uses in the specified area.

Negligible Impact Analysis and Determination

Pursuant to NMFS' regulations implementing the MMPA, an applicant is required to estimate the number of animals that will be ''taken'' by the specified activities (i.e., takes by harassment only, or takes by harassment, injury, and/or death). This estimate informs the analysis that NMFS must perform to determine whether the activity will have a ''negligible impact'' on the species or stock. Level B (behavioral) harassment occurs at the level of the individual(s) and does not assume any resulting population-level consequences, though there are known avenues through which behavioral disturbance of individuals can result in population-level effects. A negligible impact finding is based on the lack of likely adverse effects on annual rates of recruitment or survival (i.e., population-level effects). An estimate of the number of Level B harassment takes, alone, is not enough information on which to base an impact determination. In addition to considering estimates of the number of marine mammals that might be ''taken'' through behavioral harassment, NMFS must consider other factors, such as the likely nature of any responses (their intensity, duration, etc.), the context of any responses (critical reproductive time or location, migration, etc.), or any of the other variables mentioned in the first paragraph (if known), as well as the number and nature of estimated Level A takes, the number of estimated mortalities, and effects on habitat.

The Navy's specified activities have been described based on best estimates of the planned training exercises at SSTC action area. Some of the noises that would be generated as a result of the proposed underwater detonation and ELCAS pile driving activities are high intensity. However, the planned explosives have relatively small zones of influence. The locations of the proposed training activities are shallow water areas, which would effectively contain the spreading of explosive energy within the bottom boundary. Taking the above into account, along with the fact that NMFS anticipates no mortalities and injuries to result from the action, the fact that there are no specific areas of reproductive importance for marine mammals recognized within the SSTC area, the sections discussed below, and dependent upon the implementation of the proposed mitigation measures, NMFS has determined that Navy training exercises utilizing underwater detonations and ELCAS pile driving and removal would have a negligible impact on the affected marine mammal species and stocks present in the SSTC Study Area.

NMFS' analysis of potential behavioral harassment, temporary threshold shifts, permanent threshold shifts, injury, and mortality to marine mammals as a result of the SSTC training activities was provided earlier in this document and is analyzed in more detail below.

Behavioral Harassment

As discussed earlier, the Navy's proposed SSTC training activities would use small underwater explosives with maximum NEW of 29 lbs with 16 events per year in areas of small ZOIs that would mostly eliminate the likelihood of mortality and injury to marine mammals. In addition, these detonation events are widely dispersed in several designated sites within the SSTC Study Area. The probability that detonation events will overlap in time and space with marine mammals is low, particularly given the densities of marine mammals in the vicinity of SSTC Study Area and the implementation of monitoring and mitigation measures. Moreover, NMFS does not expect animals to experience repeat exposures to the same sound source as animals will likely move away from the source after being exposed. In addition, these isolated exposures, when received at distances of Level B behavioral harassment (i.e., 177 dB re 1 μPa^2-s), are expected to cause brief startle reactions or short-term behavioral modification by the animals. These brief reactions and behavioral changes are expected to disappear when the exposures cease. Therefore, these levels of received impulse noise from detonation are not expected to affect annual rates or recruitment or survival.

TTS

NMFS and the Navy have estimated that individuals of some species of marine mammals may sustain some level of temporary threshold shift TTS from underwater detonations. TTS can last from a few minutes to days, be of varying degree, and occur across various frequency bandwidths. The TTS sustained by an animal is primarily classified by three characteristics:

- Frequency—Available data (of mid-frequency hearing specialists exposed to mid to high frequency sounds—Southall *et al.* 2007) suggest that most TTS occurs in the frequency range of the source up to one octave higher than the source (with the maximum TTS at ½ octave above).
- Degree of the shift (i.e., how many dB is the sensitivity of the hearing reduced by)—generally, both the degree of TTS and the duration of TTS will be greater if the marine mammal is exposed to a higher level of energy (which would occur when the peak dB level is higher or the duration is longer). Since the impulse from detonation is extremely brief, an animal would have to approach very close to the detonation site to increase the received SEL. The threshold for the onset of TTS for detonations is a dual criteria: 182 dB re 1 μPa^2-s or 23 psi, which might be received at distances from 20–490 yards from the centers of detonation based on the types of NEW involved to receive the SEL that causes TTS compared to similar source level with longer durations (such as sonar signals).
- Duration of TTS (Recovery time)—Of all TTS laboratory studies, some using exposures of almost an hour in duration or up to SEL at 217 dB re 1 μPa^2-s, almost all recovered within 1 day (or less, often in minutes), though in one study (Finneran *et al.* 2007), recovery took 4 days.

Although the degree of TTS depends on the received noise levels and exposure time, all studies show that TTS is reversible and animals' sensitivity is expected to recover fully in minutes to hours based on the fact that the proposed underwater detonations are small in scale and isolated. Therefore, NMFS expects that TTS would not affect annual rates of recruitment or survival.

Acoustic Masking or Communication Impairment

As discussed above, it is also possible that anthropogenic sound could result in masking of marine mammal communication and navigation signals. However, masking only occurs during the time of the signal (and potential secondary arrivals of indirect rays), versus TTS, which occurs continuously for its duration. Impulse sounds from underwater detonation and pile driving are brief and the majority of most

animals' vocalizations would not be masked. Although impulse noises such as those from underwater explosives and impact pile driving tend to decay at distance, and thus become non-impulse, give the area of extremely shallow water (which effectively attenuates low frequency sound of these impulses) and the small NEW of explosives, the SPLs at these distances are expected to be barely above ambient level. Therefore, masking effects from underwater detonation are expected to be minimal and unlikely. If masking or communication impairment were to occur briefly, it would be in the frequency ranges below 100 Hz, which overlaps with some mysticete vocalizations; however, it would likely not mask the entirety of any particular vocalization or communication series because of the short impulse.

PTS, Injury, or Mortality

The modeling for take estimates predicts that no marine mammal would be taken by Level A harassment (injury, PTS included) or mortality due to the low power of the underwater detonation and the small ZOIs. Further, the mitigation measures have been designed to ensure that animals are detected in time to avoid injury or mortality when TDFDs are used, in consideration of swim speed.

Additionally, as discussed previously, the take estimates do not account for the implementation of mitigation measures. With the implementation of mitigation and monitoring measures, NMFS expects that the takes would be reduced further. Coupled with the fact that these impacts would likely not occur in areas and times critical to reproduction, NMFS has preliminarily determined that the total taking incidental to the Navy's proposed SSTC training activities would have a negligible impact on the marine mammal species and stocks present in the SSTC Study Area.

Based on the analyses of the potential impacts from the proposed underwater detonation training exercises conducted within the Navy's SSTC action area, including the consideration of TDFD use and the implementation of the improved marine mammal monitoring and mitigation measures, NMFS has preliminarily determined that the Navy's proposed activities within the SSTC would have a negligible impact on the marine mammal species and stocks, provided that mitigation and monitoring measures are implemented.

Endangered Species Act (ESA)

No marine mammal species are listed as endangered or threatened under the ESA with confirmed or possible occurrence in the study area. Therefore, section 7 consultation under the ESA for NMFS's proposed issuance of an MMPA authorization is not warranted.

National Environmental Policy Act (NEPA)

The Navy has prepared a Final Environmental Impact Statement (EIS) for the proposed SSTC training activities. The FEIS was released in January 2011 and it is available at *http://www.silverstrandtraining complexeis.com/EIS.aspx/*. NMFS is a cooperating agency (as defined by the Council on Environmental Quality (40 CFR 1501.6)) in the preparation of the EIS. NMFS has subsequently adopted the FEIS for the SSTC training activities.

Proposed Authorization

As a result of these preliminary determinations, NMFS proposes to issue an IHA to the Navy for activities at the SSTC, provided the previously mentioned mitigation, monitoring, and reporting requirements are incorporated. The proposed IHA language is provided below:

The Commander, U.S. Pacific Fleet, 250 Makalapa Drive, Pearl Harbor, HI 96860–7000, and persons operating under his authority (i.e., Navy), are hereby authorized under section 101(a)(5)(D) of the Marine Mammal Protection Act (16 U.S.C. 1371 (a)(5)(D)), to harass marine mammals incidental to Navy training activities conducted in the Silver Strand Training Complex (SSTC) in California.

1. This Incidental Harassment Authorization (IHA) is valid from July 18, 2012, through July 17, 2013.

2. This IHA is valid only for training activities conducted at the SSTC Study Area in the vicinity of San Diego Bay, California. The geography location of the SSTC Study Area is located south of the City of Coronado, California and north of the City of Imperial Beach, California.

3. General Conditions.

(a) A copy of this IHA must be in the possession of the Commander, his designees, and commanding officer(s) operating under the authority of this IHA.

(b) The species authorized for taking are the California sea lion (*Zalophus californianus*), Pacific Harbor seal (*Phoca vitulina*), bottlenose dolphin (*Tursiops truncatus*), the eastern North Pacific gray whale (*Eschrichtius robustus*), long-beaked common dolphin (*Delphinus capensis*), short-beaked common dolphin (*D. delphis*), Pacific white-sided dolphin (*Lagenorhynchus obliquidens*), and Risso's dolphin (*Grampus griseus*).

(c) The taking, by Level B harassment only, is limited to the species listed in condition 3(b).

(d) The taking by Level A harassment, injury or death of any of the species listed in item 3(b) of the Authorization or the taking by harassment, injury or death of any other species of marine mammal is prohibited and may result in the modification, suspension, or revocation of this IHA.

(e) In the unanticipated event that any cases of marine mammal injury or mortality are judged to result from these activities, the holder of this Authorization must immediately cease operations and report the incident, as soon as clearance procedures allow, to the Assistant Regional Administrator (ARA) for Protected Resources, NMFS Southwest Region, phone (562) 980–4000 and to the Chief, Permits and Conservation Division, Office of Protected Resources, NMFS, phone (301) 427–8401.

(i) The Navy shall suspend the training activities at the SSTC until NMFS is able to review the incident and determine whether steps can be taken to avoid further injury or mortality or until such taking can be authorized under regulations promulgated under section 101(a)(5)(A) of the Marine Mammal Protection Act.

4. Mitigation Measures.

In order to ensure the least practicable impact on the species and levels of takes listed in 3(b) and (c), the holder of this Authorization is required to comply with the following mitigation measures:

(a) Mitigation Measures for Underwater Detonations

(i) Mitigation and Monitoring Measures for Underwater Detonations in Very Shallow Water (VSW, water depth < 24 ft)

(1) Mitigation and Monitoring Measures for VSW Underwater Detonations Using Positive Control.

A. Underwater detonations using positive control (remote firing devices) shall only be conducted during daylight.

B. Easily visible anchored floats shall be positioned on 700 yard radius of a roughly semi-circular zone (the shoreward half being bounded by shoreline and immediate off-shore water) around the detonation location for small explosive exercises at the SSTC. These mark the outer limits of the mitigation zone.

C. For each VSW underwater detonation event, a safety-boat with a minimum of one observer shall be launched 30 or more minutes prior to detonation and moves through the area around the detonation site. The safety-

boat observer shall be in constant radio communication with the exercise coordinator and shore observer.

D. A shore-based observer shall also be deployed for VSW detonations in addition to boat based observers. The shore observer shall indicate that the area is clear of marine mammals after 10 or more minutes of continuous observation with no marine mammals having been seen in the mitigation zone or moving toward it.

E. At least 10 minutes prior to the planned initiation of the detonation event sequence, the shore observer, on an elevated on-shore position, shall begin a continuous visual search with binoculars of the mitigation zone. At this time, the safety-boat observer shall inform the shore observer if any marine mammal has been seen in the zone and, together, both search the surface within and beyond the mitigation zone for marine mammals.

F. The observers (boat and shore based) shall indicate that the area is not clear any time a marine mammal is sighted in the mitigation zone or moving toward it and, subsequently, indicate that the area is clear of marine mammals when the animal is out and moving away and no other marine mammals have been sited.

G. Initiation of the detonation sequence shall only begin on final receipt of an indication from the shore observer that the area is clear of marine mammals and will be postponed on receipt of an indication from any observer that the area is not clear of marine mammals.

H. Following the detonation, visual monitoring of the mitigation zone shall continue for 30 minutes for the appearance of any marine mammal in the zone. Any marine mammal appearing in the area shall be observed for signs of possible injury.

I. Any marine mammal observed after a VSW underwater detonation either injured or exhibiting signs of distress shall be reported via operational chain of command to Navy environmental representatives from U.S. Pacific Fleet, Environmental Office, San Diego Detachment. Using Marine Mammal Stranding communication trees and contact procedures established for the Southern California Range Complex, the Navy shall report these events to the Stranding Coordinator of NMFS' Southwest Regional Office. These voice or email reports shall contain the date and time of the sighting, location (or if precise latitude and longitude is not currently available, then the approximate location in reference to an established SSTC beach feature), species description (if known), and indication of the animal's status.

(2) Mitigation and Monitoring Measures for VSW Underwater Detonations Using Time-Delay (TDFD Only).

A. Underwater detonations using timed delay devices will only be conducted during daylight.

B. Time-delays longer than 10 minutes shall not be used. The initiation of the device shall not start until the mitigation area below is clear for a full 30 minutes prior to initiation of the timer.

C. A mitigation zone shall be established around each underwater detonation location as indicated in Table below based on charge weight and length of time delay used.

TABLE 7—UPDATED BUFFER ZONE RADIUS (YD) FOR TDFDS BASED ON SIZE OF CHARGE AND LENGTH OF TIME-DELAY, WITH ADDITIONAL BUFFER ADDED TO ACCOUNT FOR FASTER SWIM SPEEDS

	Time-delay					
	5 min	6 min	7 min	8 min	9 min	10 min
Charge Size (lb NEW)						
5 lb	1,000 yd	1,000 yd	1,000 yd	1,000 yd	1,400 yd	1,400 yd.
10 lb	1,000 yd	1,000 yd	1,000 yd	1,400 yd	1,400 yd	1,400 yd.
15–29 lb	1,000 yd	1,400 yd	1,400 yd	1,400 yd	1,500 yd	1,500 yd.

D. VSW ranges 1,000 yds:

(A) For each VSW underwater detonation event with a mitigation zone of 1,000 yds, a safety boat with a minimum of one observer shall be launched 30 or more minutes prior to detonation and moves through the area around the detonation site at the seaward edge of the mitigation zone. The task of the boat is to exclude humans from coming into the area and to augment a shore observer's visual search of the mitigation zone for marine mammals. The safety-boat observer shall be in constant radio communication with the exercise coordinator and shore observer discussed below. To the best extent practical, boats will try to maintain a 10 knot search speed.

(B) A shore-based observer shall also be deployed for VSW detonations in addition to boat based observers. At least 10 minutes prior to the planned initiation of the detonation event-sequence, the shore observer, on an elevated on-shore position, begins a continuous visual search with binoculars of the mitigation zone. The safety-boat observer shall inform the shore observer if any marine mammal has been seen in the zone and, together, both search the surface within and beyond the mitigation zone for marine mammals. The shore observer shall indicate that the area is clear of marine mammals after 10 or more minutes of continuous observation with no marine mammals having been seen in the mitigation zone or moving toward it.

E. VSW ranges larger than 1,400 yards:

(A) A minimum of 2 boats shall be used to survey for marine mammals at mitigation ranges larger than 1,400 yards.

(B) When conducting the surveys within a mitigation zone >1,400 yds, boats shall position themselves near the mid-point of the mitigation zone radius (but always outside the detonation plume radius/human safety zone) and travel in a semi-circular pattern around the detonation location surveying both the inner (toward detonation site) and outer (away from detonation site) areas. When using 2 boats, each boat shall be positioned on opposite sides of the detonation location, separated by 180 degrees. If using more than 2 boats, each boat shall be positioned equidistant from one another (120 degrees separation for 3 boats, 90 degrees separation for 4 boats, etc.). If available, aerial visual survey support from Navy helicopters can be utilized, so long as it shall not jeopardize safety of flight. Helicopters will travel in a circular pattern around the detonation location.

F. A mitigation zone shall be surveyed from 30 minutes prior to the detonation and for 30 minutes after the detonation.

G. Other personnel besides boat observers shall also maintain situational awareness on the presence of marine mammals within the mitigation zone to

the best extent practical given dive safety considerations. Divers placing the charges on mines shall observe the immediate underwater area around a detonation site for marine mammals and report sightings to surface observers.

H. If a marine mammal is sighted within an established mitigation zone or moving towards it, underwater detonation events shall be suspended until the marine mammal has voluntarily left the area and the area is clear of marine mammals for at least 30 minutes.

I. Immediately following the detonation, visual monitoring for affected marine mammals within the mitigation zone shall continue for 30 minutes.

J. Any marine mammal observed after an underwater detonation either injured or exhibiting signs of distress shall be reported via Navy operational chain of command to Navy environmental representatives from U.S. Pacific Fleet, Environmental Office, San Diego Detachment. Using Marine Mammal Stranding communication trees and contact procedures established for the Southern California Range Complex, the Navy shall report these events to the Stranding Coordinator of NMFS' Southwest Regional Office. These voice or email reports shall contain the date and time of the sighting, location (or if precise latitude and longitude is not currently available, then the approximate location in reference to an established SSTC beach feature), species description (if known), and indication of the animal's status.

(ii) Mitigation and Monitoring Measures for Underwater Detonations in Shallow Water (>24 Feet)

(1) Mitigation and Monitoring Measures for Underwater Detonations Using Positive Control (Except SWAG and Timed Detonations).

A. Underwater detonations using positive control devices shall only be conducted during daylight.

B. A mitigation zone of 700 yards shall be established around each underwater detonation point.

C. A minimum of two boats, including but not limited to small zodiacs and 7-m Rigid Hulled Inflatable Boats (RHIB) shall be deployed. One boat shall act as an observer platform, while the other boat is typically the diver support boat.

D. Two observers with binoculars on one small craft/boat shall survey the detonation area and the mitigation zone for marine mammals from at least 30 minutes prior to commencement of the scheduled explosive event and until at least 30 minutes after detonation.

E. In addition to the dedicated observers, all divers and boat operators engaged in detonation events can potentially monitor the area immediately surrounding the point of detonation for marine mammals.

F. If a marine mammal is sighted within the 700 yard mitigation zone or moving towards it, underwater detonation events shall be suspended until the marine mammal has voluntarily left the area and the area is clear of marine mammals for at least 30 minutes.

G. Immediately following the detonation, visual monitoring for marine mammals within the mitigation zone shall continue for 30 minutes. Any marine mammal observed after an underwater detonation either injured or exhibiting signs of distress shall be reported to via Navy operational chain of command to Navy environmental representatives from U.S. Pacific Fleet, Environmental Office, San Diego Detachment. Using Marine Mammal Stranding communication trees and contact procedures established for the Southern California Range Complex, the Navy will report these events to the Stranding Coordinator of NMFS' Southwest Regional Office. These voice or email reports shall contain the date and time of the sighting, location (or if precise latitude and longitude is not currently available, then the approximate location in reference to an established SSTC beach feature), species description (if known), and indication of the animals status.

(2) Mitigation and Monitoring Measures for Underwater Detonations Using Time-Delay (TDFD Detonations Only)

A. Underwater detonations using timed delay devices shall only be conducted during daylight.

B. Time-delays longer than 10 minutes shall not be used. The initiation of the device shall not start until the mitigation area below is clear for a full 30 minutes prior to initiation of the timer.

C. A mitigation zone shall be established around each underwater detonation location as indicated in Table above based on charge weight and length of time-delay used. When conducting the surveys within a mitigation zone (either 1,000 or 1,400 yds), boats shall position themselves near the mid-point of the mitigation zone radius (but always outside the detonation plume radius/human safety zone) and travel in a circular pattern around the detonation location surveying both the inner (toward detonation site) and outer (away from detonation site) areas.

D. Shallow water TDFD detonations range 1,000 yds:

(A) A minimum of 2 boats shall be used to survey for marine mammals at mitigation ranges of 1,000 yds.

(B) When using 2 boats, each boat shall be positioned on opposite sides of the detonation location, separated by 180 degrees.

(C) Two observers in each of the boats shall conduct continuous visual survey of the mitigation zone for the entire duration of a training event.

(D) To the best extent practical, boats shall try to maintain a 10 knot search speed. This search speed was added to ensure adequate coverage of the buffer zone during observation periods. While weather conditions and sea states may require slower speeds in some instances, 10 knots is a prudent, safe, and executable speed that will allow for adequate surveillance. For a 1,000 yd radius buffer zone a boat travelling at 10 knots and 500 yds away from the detonation point would circle the detonation point 3.22 times during a 30 minute survey period. By using 2 boats, 6.44 circles around the detonation point would be completed in a 30 minute span.

E. Shallow water TDFD detonations greater than 1,400 yds:

(A) A minimum of 3 boats or 2 boats and 1 helicopter shall be used to survey for marine mammals at mitigation ranges of 1,400 yds.

(B) When using 3 (or more) boats, each boat shall be positioned equidistant from one another (120 degrees separation for 3 boats, 90 degrees separation for 4 boats, etc.).

(C) For a 1,400 yd radius mitigation zone, a 10 knot speed results in 2.3 circles for each of the three boats, or nearly 7 circles around the detonation point over a 30 minute span.

(D) If available, aerial visual survey support from Navy helicopters shall be utilized, so long as it will not jeopardize safety of flight.

(E) Helicopters, if available, shall be used in lieu of one of the boat requirements. A helicopter search pattern is dictated by standard Navy protocols and accounts for multiple variables, such as the size and shape of the search area, size of the object being searched for, and local environmental conditions, among others.

F. A mitigation zone shall be surveyed from 30 minutes prior to the detonation and for 30 minutes after the detonation.

G. Other personnel besides boat observers can also maintain situational awareness on the presence of marine mammals within the mitigation zone to the best extent practical given dive safety considerations. Divers placing the charges on mines shall observe the immediate underwater area around a

detonation site for marine mammals and report sightings to surface observers.

H. If a marine mammal is sighted within an established mitigation zone or moving towards it, underwater detonation events shall be suspended until the marine mammal has voluntarily left the area and the area is clear of marine mammals for at least 30 minutes.

I. Immediately following the detonation, visual monitoring for affected marine mammals within the mitigation zone shall continue for 30 minutes.

J. Any marine mammal observed after an underwater detonation either injured or exhibiting signs of distress shall be reported via Navy operational chain of command to Navy environmental representatives from U.S. Pacific Fleet, Environmental Office, San Diego Detachment or Pearl Harbor. Using Marine Mammal Stranding protocols and communication trees established for the Southern California and Hawaii Range Complexes, the Navy shall report these events to the Stranding Coordinator of NMFS' Southwest or Pacific Islands Regional Office. These voice or email reports shall contain the date and time of the sighting, location (or if precise latitude and longitude is not currently available, then the approximate location in reference to an established SSTC beach feature), species description (if known), and indication of the animal's status.

(3) Mitigation and Monitoring Measures for Underwater SWAG Detonations (SWAG Only).

A. Underwater detonations using SWAG shall only be conducted during daylight.

B. A mitigation zone of 60 yards shall be established around each SWAG detonation site.

C. A minimum of two boats, including but not limited to small zodiacs and 7-m Rigid Hulled Inflatable Boats (RHIB) shall be deployed. One boat shall act as an observer platform, while the other boat is typically the diver support boat.

D. Two observers with binoculars on one small craft\boat shall survey the detonation area and the mitigation zone for marine mammals from at least 10 minutes prior to commencement of the scheduled explosive event and until at least 10 minutes after detonation.

E. In addition to the dedicated observers, all divers and boat operators engaged in detonation events shall monitor the area immediately surrounding the point of detonation for marine mammals when possible.

F. Divers and personnel in support boats shall monitor for marine mammals out to the 60 yard mitigation zone for 10 minutes prior to any detonation.

G. After the detonation, visual monitoring for marine mammals shall continue for 10 minutes. Any marine mammal observed after an underwater detonation either injured or exhibiting signs of distress shall be reported via Navy operational chain of command to Navy environmental representatives from U.S. Pacific Fleet, Environmental Office, San Diego Detachment. Using Marine Mammal Stranding communication trees and contact procedures established for the Southern California Range Complex, the Navy shall report these events to the Stranding Coordinator of NMFS' Southwest Regional Office. These voice or email reports shall contain the date and time of the sighting, location (or if precise latitude and longitude is not currently available, then the approximate location in reference to an established SSTC beach feature), species description (if known), and indication of the animal's status.

(a) Mitigation for ELCAS Training at SSTC

(1) Safety Zone: A safety zone shall be established at 150 feet (50 yards) from ELCAS pile driving or removal events. This safety zone is base on the predicted range to Level A harassment (180 dB_{rms}) for cetaceans during pile driving, and is being applied conservatively to both cetaceans and pinnipeds during pile driving and removal.

(2) If marine mammals are found within the 150-foot (50-yard) safety zone, pile driving or removal events shall be halted until the marine mammals have voluntarily left the mitigation zone.

(3) Monitoring for marine mammals shall be conducted within the zone of influence and take place at 30 minutes before, during, and 30 minutes after pile driving and removal activities, including ramp-up periods. A minimum of one trained observer shall be placed on shore, on the ELCAS, or in a boat at the best vantage point(s) practicable to monitor for marine mammals.

(4) Monitoring observer(s) shall implement shut-down/delay procedures by calling for shut-down to the hammer operator when marine mammals are sighted within the safety zone. After a shut-down/delay, pile driving or removal shall not be resumed until the marine mammal within the safety zone is confirmed to have left the area or 30 minutes have passed without seeing the animal.

(5) Soft Start—ELCAS pile driving shall implement a soft start as part of normal construction procedures. The pile driver increases impact strength as resistance goes up. At first, the pile driver piston drops a few inches. As resistance goes up, the pile driver piston will drop from a higher distance thus providing more impact due to gravity. This will allow marine mammals in the project area to vacate or begin vacating the area minimizing potential harassment.

(6) Emergency Shut-down Related to Marine Mammal Injury and Mortality—If there is clear evidence that a marine mammal is injured or killed as a result of the proposed Navy training activities (e.g., instances in which it is clear that munitions explosions caused the injury or death), the Naval activities shall be immediately suspended and the situation immediately reported by personnel involved in the activity to the officer in charge of the training, who will follow Navy procedures for reporting the incident to NMFS through the Navy's chain-of-command.

1. Monitoring Measures

In order to ensure the least practicable impact on the species and levels of takes listed in 3(b) and (c), the holder of this Authorization is required to comply with the following monitoring measures:

(i) Marine Mammal Observer at a Sub-set of SSTC Underwater Detonation:

(1) Civilian scientists acting as protected species observers (PSOs) shall be used to observe a sub-set of the SSTC underwater detonation events. The PSOs shall validate the suite of SSTC specific mitigation measures applicable to a sub-set of SSTC training events and to observe marine mammal behavior in the vicinity of SSTC training events.

(2) PSOs shall be field-experienced observers that are either Navy biologists or contracted marine biologists. These civilian PSOs shall be placed either alongside existing Navy SSTC operators during a sub-set of training events, or on a separate small boat viewing platform.

(3) PSOs shall collect the same data currently being collected for more elaborate offshore ship-based observations including but not limited to:

A. location of sighting;
B. species;
C. number of individuals;
D. number of calves present;
E. duration of sighting;
F. behavior of marine animals sighted;
G. direction of travel;
H. environmental information associated with sighting event including Beaufort sea state, wave height, swell direction, wind direction, wind speed, glare, percentage of glare, percentage of cloud cover; and
I. when in relation to Navy training did the sighting occur [before, during or after the detonation(s)].

(1) The PSOs will not be part of the Navy's formal reporting chain of command during their data collection efforts. Exceptions can be made if a marine mammal is observed by the PSO within the SSTC specific mitigation zones the Navy has formally proposed to the NMFS. The PSO shall inform any Navy operator of the sighting so that appropriate action may be taken by the Navy trainees.

(i) ELCAS Visual Monitoring: The Navy shall place monitoring personnel to note any observations during the entire pile driving sequence, including ''soft start'' period, for later analysis. Information regarding species observed during pile driving and removal events (including soft start period) shall include:

(1) location of sighting;

(2) species;

(3) number of individuals;

(4) number of calves present;

(5) duration of sighting;

(6) behavior of marine animals sighted;

(7) direction of travel;

(8) environmental information associated with sighting event including Beaufort sea state, wave height, swell direction, wind direction, wind speed, glare, percentage of glare, percentage of cloud cover; and

(9) when in relation to Navy training did the sighting occur (before, during or after pile driving or removal).

(i) ELCAS Acoustic Monitoring: The Navy shall conduct underwater acoustic propagation monitoring during the first available ELCAS deployment at the SSTC. These acoustic monitoring results shall be used to either confirm or refine the Navy's zones of safety and influence for pile driving and removal listed in 4(b)(1).

1. Reporting Measures

(i) The Navy shall report results obtained annually from the Southern California Range Complex Monitoring Plan for areas pertinent to the SSTC, if applicable.

(ii) The Navy shall submit a report to the Office of Protected Resources, NMFS, no later than 90 days after the expiration of the IHA. The report shall, at a minimum, includes the following marine mammal sighting information:

(1) location of sighting;

(2) species;

(3) number of individuals;

(4) number of calves present;

(5) duration of sighting;

(6) behavior of marine animals sighted;

(7) direction of travel;

(8) environmental information associated with sighting event including Beaufort sea state, wave height, swell direction, wind direction, wind speed, glare, percentage of glare, percentage of cloud cover; and

(9) when in relation to Navy training did the sighting occur [before, during or after the detonation(s)].

(i) In addition, the Navy shall provide the information for all of its underwater detonation events and ELCAS events under the IHA. The information shall include: (1) Total number of each type of underwater detonation events conducted at the SSTC, and (2) total number of piles driven and extracted during the ELCAS exercise.

(ii) The Navy shall submit to NMFS a draft report as described above and shall respond to NMFS comments within 3 months of receipt. The report will be considered final after the Navy has addressed NMFS' comments, or 3 months after the submittal of the draft if NMFS does not comment by then.

1. This Authorization may be modified, suspended or withdrawn if the holder fails to abide by the conditions prescribed herein, or if the authorized taking is having more than a negligible impact on the species or stock of affected marine mammals.

Dated: April 18, 2013.

Helen M. Golde,

Acting Director, Office of Protected Resources, National Marine Fisheries Service.

[FR Doc. 2013–09618 Filed 4–23–13; 8:45 am]

BILLING CODE 3510–22–P

DEPARTMENT OF COMMERCE

Patent and Trademark Office

Submission for OMB Review; Comment Request

The United States Patent and Trademark Office (USPTO) will submit to the Office of Management and Budget (OMB) for clearance the following proposal for collection of information under the provisions of the Paperwork Reduction Act (44 U.S.C. Chapter 35).

Agency: United States Patent and Trademark Office (USPTO).

Title: Patent Cooperation Treaty.

Form Number(s): PCT/RO/101, PCT/RO/134, PCT/IB/372, PCT/IPEA/401, PTO–1382, PTO–1390, PTO/SB/61/PCT, PTO/SB/64/PCT.

Agency Approval Number: 0651–0021.

Type of Request: Revision of a currently approved collection.

Burden: 348,686 hours annually.

Number of Respondents: 353,669 responses per year.

Avg. Hours per Response: The USPTO estimates that it will take the public approximately 15 minutes (0.25 hours) to 8 hours to gather the necessary information, prepare the appropriate form or documents, and submit the information to the USPTO.

Needs and Uses: The purpose of the Patent Cooperation Treaty (PCT) is to provide a standardized filing format and procedure that allows an applicant to seek protection for an invention in several countries by filing one international application in one location, in one language, and paying one initial set of fees. The information in this collection is used by the public to submit a patent application under the PCT and by the USPTO to fulfill its obligation to process, search, and examine the application as directed by the treaty.

Affected Public: Individuals or households; businesses or other for-profits; and not-for-profit institutions.

Frequency: On occasion.

Respondent's Obligation: Required to obtain or retain benefits.

OMB Desk Officer: Nicholas A. Fraser, email: *Nicholas_A._Fraser@omb.eop.gov.*

Once submitted, the request will be publicly available in electronic format through the Information Collection Review page at *www.reginfo.gov.*

Paper copies can be obtained by:

- *Email: InformationCollection@uspto.gov.* Include ''0651–0021 copy request'' in the subject line of the message.
- *Mail:* Susan K. Fawcett, Records Officer, Office of the Chief Information Officer, United States Patent and Trademark Office, P.O. Box 1450, Alexandria, VA 22313–1450.

Written comments and recommendations for the proposed information collection should be sent on or before May 24, 2013 to Nicholas A. Fraser, OMB Desk Officer, via email to *Nicholas_A._Fraser@omb.eop.gov,* or by fax to 202–395–5167, marked to the attention of Nicholas A. Fraser.

Dated: April 19, 2013.

Susan K. Fawcett,

Records Officer, USPTO, Office of the Chief Information Officer.

[FR Doc. 2013–09649 Filed 4–23–13; 8:45 am]

BILLING CODE 3510–16–P

DEPARTMENT OF DEFENSE

Office of the Secretary

Board of Regents of the Uniformed Services University of the Health Sciences; Notice of Quarterly Meeting

AGENCY: Department of Defense, Uniformed Services University of the Health Sciences (USU).

ACTION: Quarterly meeting notice.

SUMMARY: Under the provisions of the Federal Advisory Committee Act of 1972 (5 U.S.C., Appendix, as amended) and the Government in the Sunshine Act of 1976 (5 U.S.C. 552b, as amended), this notice announces the following meeting of the Board of Regents of the Uniformed Services University of the Health Sciences.

DATES: Friday, May 17, 2013, from 8:00 a.m. to 2:00 p.m. (Open Session) and 2:00 p.m. to 3:00 p.m. (Closed Session).

ADDRESSES: Everett Alvarez Jr. Board of Regents Room (D3001), Uniformed Services University of the Health Sciences, 4301 Jones Bridge Road, Bethesda, Maryland 20814.

FOR FURTHER INFORMATION CONTACT: S. Leeann Ori, Designated Federal Officer, 4301 Jones Bridge Road, Bethesda, Maryland 20814; telephone 301–295–3066. Mrs. Ori can also provide base access procedures.

SUPPLEMENTARY INFORMATION: *Purpose of the Meeting:* Meetings of the Board of Regents assure that USU operates in the best traditions of academia. An outside Board is necessary for institutional accreditation.

Agenda: The actions that will take place include the approval of minutes from the Board of Regents Meeting held February 5, 2013; recommendations regarding the approval of faculty appointments and promotions in the School of Medicine, Graduate School of Nursing and the Postgraduate Dental College; and recommendations regarding the awarding of post-baccalaureate degrees as follows: Doctor of Medicine, Ph.D. in Nursing Science, Master of Science in Nursing, Master of Science in Oral Biology, and master's and doctoral degrees in the biomedical sciences and public health. The President, USU will provide a report and information from both academic and administrative University officials will be presented during the meeting. Regents will also receive reports from the President and CEO, Henry M. Jackson Foundation for the Advancement of Military Medicine, the USU Equal Employment Opportunity Officer, and the Director, Center for Neuroscience and Regenerative Medicine. These actions are necessary for the University to pursue its mission, which is to provide outstanding health care practitioners and scientists to the uniformed services.

Meeting Accessibility: Pursuant to Federal statute and regulations (5 U.S.C. 552b, as amended, and 41 CFR 102–3.140 through 102–3.165) and the availability of space, most of the meeting is open to the public. Seating is on a first-come basis. Members of the public wishing to attend the meeting should contact S. Leeann Ori at the address and phone number in **FOR FURTHER INFORMATION CONTACT.** The closed portion of this meeting is authorized by 5 U.S.C. 552b(c)(2) as the information relates solely to the internal personnel rules and practices of the University and 5 U.S.C. 552b(c)(6) as the subject matter involves personal and private observations.

Written Statements: Interested persons may submit a written statement for consideration by the Board of Regents. Individuals submitting a written statement must submit their statement to the Designated Federal Officer at the address listed in **FOR FURTHER INFORMATION CONTACT.** If such statement is not received at least 10 calendar days prior to the meeting, it may not be provided to or considered by the Board of Regents until its next open meeting. The Designated Federal Officer will review all timely submissions with the Board of Regents Chairman and ensure such submissions are provided to Board of Regents Members before the meeting. After reviewing the written comments, submitters may be invited to orally present their issues during the May 2013 meeting or at a future meeting.

Dated: April 19, 2013.

Aaron Siegel,

Alternate OSD Federal Register Liaison Officer, Department of Defense.

[FR Doc. 2013–09623 Filed 4–23–13; 8:45 am]

BILLING CODE 5001–06–P

DEPARTMENT OF DEFENSE

Department of the Army

Advisory Committee on Arlington National Cemetery (ACANC)

AGENCY: Department of the Army, DoD.

ACTION: Notice of open committee meeting.

SUMMARY: Pursuant to the Federal Advisory Committee Act of 1972 (5 U.S.C., Appendix, as amended), the Sunshine in the Government Act of 1976 (U.S.C. 552b, as amended) and 41 Code of the Federal Regulations (CFR 102–3. 140 through 160), the Department of the Army announces the following committee meeting:

Name of Committee: Advisory Committee on Arlington National Cemetery.

Date of Meeting: Wednesday, May 8, 2013.

Time of Meeting: 9:00 a.m.–4:00 p.m.

Place of Meeting: Women in Military Service for America Memorial, Conference Room, Arlington National Cemetery, Arlington, VA.

Proposed Agenda: Purpose of the meeting is to approve minutes from the previous meeting on September 10, 2012; review the State of Arlington National Cemetery, formalize business rules for memorial requests at ANC in accordance with Public Law 112–154; review status of subcommittee topics; and set the proposed calendar for follow-on meetings.

Public's Accessibility to the Meeting: Pursuant to 5 U.S.C. 552b and 41 CFR 102–3.140 through 102–3.165, and the availability of space, this meeting is open to the public. Seating is on a first-come basis.

FOR FURTHER INFORMATION CONTACT: Ms. Renea C. Yates; Designated Federal Officer; *renea.c.yates.civ@mail.mil* or 703–614–1248.

SUPPLEMENTARY INFORMATION: The following topics are on the agenda for discussion:

- Army National Cemeteries operational update.
- Memorial requests consultation IAW PL 112–154.
- Subcommittee Activities:
  - ''Honor'' Subcommittee: independent recommendations of methods to address the long-term future of Arlington National Cemetery, including how best to extend the active burials and on what ANC should focus once all available space has been used.
  - ''Remember'' Subcommittee: recommendations on preserving the marble components of the Tomb of the Unknown Soldier, including the cracks in the large marble sarcophagus, the adjacent marble slabs, and the potential replacement of the marble stone for the sarcophagus already gifted to the Army.
  - ''Explore'' Subcommittee: recommendations on Section 60 Mementos study and improving the quality of visitors' experiences, now and for generations to come.

The Committee's mission is to provide the Secretary of Defense, through the Secretary of the Army, independent advice and recommendations on Arlington National Cemetery, including, but not limited to:

a. Management and operational issues, including bereavement practices;

b. Plans and strategies for addressing long-term governance challenges;

c. Resource planning and allocation; and

d. Any other matters relating to Arlington National Cemetery that the Committee's co-chairs, in consultation with the Secretary of the Army, may decide to consider.

Filing Written Statement: Pursuant to 41 CFR 102–3.140d, the Committee is not obligated to allow the public to speak; however, interested persons may submit a written statement for consideration by the Committee. Written statements must be received by the Designated Federal Officer at the following address: Advisory Committee on Arlington National Cemetery, ATTN: Designated Federal Officer (DFO) (Ms. Yates), Arlington National Cemetery, Arlington, Virginia 22211 not later than 5:00 p.m., Monday, May 6, 2013. Written statements received after this date may not be provided to or considered by the Advisory Committee on Arlington National Cemetery until the next open meeting. The Designated Federal Officer will review all timely submissions with the Committee Chairperson and ensure they are provided to the members of the Advisory Committee on Arlington National Cemetery.

Brenda S. Bowen,

Army Federal Register Liaison Officer.

[FR Doc. 2013–09556 Filed 4–23–13; 8:45 am]

BILLING CODE 3710–08–P

DELAWARE RIVER BASIN COMMISSION

Notice of Public Hearing and Business Meeting

Notice is hereby given that the Delaware River Basin Commission will hold a public hearing on Tuesday, May 7, 2013. A business meeting will be held the following day on Wednesday, May 8, 2013. Both the hearing and business meeting are open to the public and will be held at the Washington Crossing Historic Park Visitor Center, 1112 River Road, Washington Crossing, Pennsylvania.

Public Hearing. The public hearing on May 7, 2013 will run from 12:00 p.m. until approximately 4:00 p.m. Hearing items will include draft dockets for withdrawals, discharges and other water-related projects, and resolutions to: (a) Adopt the Commission's annual Budget for the fiscal year ending June 30, 2014 and apportion among the Signatory Parties the amounts required for the support of the Current Expense and Capital Budgets; (b) approve the Fiscal Year 2014–2016 Water Resources Program; and (c) amend the Commission's administrative agreements with Delaware and New Jersey by the addition to ''Category F'' as defined therein of certain electric generation and co-generation facilities. The latter resolution would provide for the state agency's review and decision-making process to be used in lieu of the Commission's for the category of projects consisting of electric generation and co-generation facilities that consumptively use in excess of 100,000 gallons per day (gpd) of water during any 30-day period, when no other aspect of the project, such as a withdrawal or discharge, subjects it to Commission review pursuant to the Commission's Rules of Practice and Procedure and current administrative agreements. The public is advised to check the Commission's Web site periodically prior to the hearing date, as hearing items may be dropped if additional time is deemed necessary to complete the Commission's review. Written comments on all hearing items will be accepted through the close of the May 7 hearing.

If time allows, the public hearing will be followed by a ''public dialogue'' session, an opportunity for members of the public to address the Commissioners on any topic of concern. Comments offered during ''public dialogue'' are not part of an official decision-making record of the Commission. In a departure from past practice, the Commission's business meeting on May 8, 2013 will not include a public dialogue component.

Draft dockets and resolutions scheduled for hearing will be posted on the Commission's Web site at *www.drbc.net* 10 days prior to the meeting date. Additional public records relating to the hearing items may be examined at the Commission's offices. Please contact Victoria Lawson at 609–883–9500, extension 216, with any questions concerning these items.

Business Meeting. The business meeting on May 8, 2013 will begin at 12:15 p.m. and will include the following items: Adoption of the Minutes of the Commission's March 6, 2013 business meeting, announcements of upcoming meetings and events, a report on hydrologic conditions, reports by the Executive Director and the Commission's General Counsel, and consideration of items for which a hearing has been completed. The Commissioners also may consider action on matters not subject to a public hearing.

Among the items scheduled for consideration on May 8 is Docket No. D–1969–210 CP–13 for the Exelon Generation Company, LLC Limerick Generating Station and Surface Water Augmentation project (''LGS''). A public hearing on the LGS draft docket was held on August 28, 2012, and the written comment period ran from June 28 through October 27, 2012.

There will be no opportunity for additional public comments at the May 8, 2013 business meeting on items for which a hearing was completed on May 7 or a previous date. Commission consideration on May 8 of items for which the public hearing is closed may result in either approval of the docket or resolution as proposed, approval with changes, denial, or deferral. When the Commissioners defer an action, they may announce an additional period for written comment on the item, with or without an additional hearing date, or they may take additional time to consider the input they have already received without requesting further public input. Any deferred items will be considered for action at a public meeting of the Commission on a future date.

Advance Sign-up for Oral Comment. Individuals who wish to comment on an item scheduled for the public hearing on May 7 or to address the Commissioners informally during the public dialogue session to be provided if time allows that day, are asked to sign up in advance by contacting Paula Schmitt by email at *paula.schmitt@drbc.state.nj.us* or by phone at 609–883–9500 ext. 224.

Attending the Hearing or Meeting. The Commission's hearing and business meeting are open to the public. Without exception, however, photo identification will be required for admission. If you plan to attend, please visit the Commission's Web site, *www.drbc.net,* in advance of the hearing and meeting to review a complete set of procedures.

Addresses for Written Comment. Written comment on items scheduled for hearing may be delivered by hand at the public hearing or submitted in advance of the hearing date to: Commission Secretary, P.O. Box 7360, 25 State Police Drive, West Trenton, NJ 08628; by fax to Commission Secretary, DRBC at 609–883–9522 or by email to *paula.schmitt@drbc.state.nj.us.*

Accommodations for Special Needs. Individuals in need of an accommodation as provided for in the Americans with Disabilities Act who wish to attend the public hearing or

business meeting should contact the Commission Secretary directly at 609–883–9500 ext. 203 or through the Telecommunications Relay Services (TRS) at 711, to discuss how we can accommodate your needs.

Updates. Items scheduled for hearing are occasionally postponed to allow more time for the Commission to consider them. Other meeting items also are subject to change. Please check the Commission's Web site, *www.drbc.net,* closer to the hearing and meeting dates for changes that may be made after the deadline for filing this notice.

Additional Information, Contacts. Draft dockets and resolutions for hearing items will be posted on the Commission's Web site, *www.drbc.net,* as hyperlinks from this notice, approximately 10 days prior to the hearing date. Additional public records relating to hearing items may be examined at the Commission's offices by appointment by contacting Carol Adamovic, 609–883–9500, ext. 249. For other questions concerning dockets, please contact Victoria Lawson at 609–883–9500, ext. 216.

Dated: April 18, 2013.

Pamela M. Bush,

Commission Secretary and Assistant General Counsel.

[FR Doc. 2013–09565 Filed 4–23–13; 8:45 am]

BILLING CODE 6360–01–P

DEPARTMENT OF ENERGY

Federal Energy Regulatory Commission

[Docket No. IC13–10–000]

Commission Information Collection Activities (FERC Form 6–Q); Comment Request

AGENCY: Federal Energy Regulatory Commission, DOE.

ACTION: Comment request.

SUMMARY: In compliance with the requirements of the Paperwork Reduction Act of 1995, 44 U.S.C. 3507(a)(1)(D), the Federal Energy Regulatory Commission (Commission or FERC) is submitting the information collection FERC Form 6–Q (Quarterly Financial Report of Oil Pipeline Companies) to the Office of Management and Budget (OMB) for review of the information collection requirements. Any interested person may file comments directly with OMB and should address a copy of those comments to the Commission as explained below. The Commission issued a Notice in the **Federal Register** (78 FR 8500, 2/6/2013) requesting public comments. FERC received no comments on the FERC Form 6–Q and is making this notation in its submittal to OMB.

DATES: Comments on the collection of information are due by May 24, 2013.

ADDRESSES: Comments filed with OMB, identified by the OMB Control No. 1902–0206, should be sent via email to the Office of Information and Regulatory Affairs: *oira_submission@omb.gov.* Attention: Federal Energy Regulatory Commission Desk Officer. The Desk Officer may also be reached via telephone at 202–395–4718.

A copy of the comments should also be sent to the Federal Energy Regulatory Commission, identified by the Docket No. IC13–10–000, by either of the following methods:

- *eFiling at Commission's Web site: http://www.ferc.gov/docs-filing/efiling.asp.*
- *Mail/Hand Delivery/Courier:* Federal Energy Regulatory Commission, Secretary of the Commission, 888 First Street NE., Washington, DC 20426.

Instructions: All submissions must be formatted and filed in accordance with submission guidelines at: *http://www.ferc.gov/help/submission-guide.asp.* For user assistance contact FERC Online Support by email at *ferconlinesupport@ferc.gov,* or by phone at: (866) 208–3676 (toll-free), or (202) 502–8659 for TTY.

Docket: Users interested in receiving automatic notification of activity in this docket or in viewing/downloading comments and issuances in this docket may do so at *http://www.ferc.gov/docs-filing/docs-filing.asp.*

FOR FURTHER INFORMATION CONTACT: Ellen Brown may be reached by email at *DataClearance@FERC.gov,* by telephone at (202) 502–8663, and by fax at (202) 273–0873.

SUPPLEMENTARY INFORMATION: *Title:* FERC Form 6–Q, Quarterly Financial Report of Oil Pipeline Companies.

*OMB Control No.:*1902–0206.

Type of Request: Three-year extension of the FERC Form 6–Q information collection requirements with no changes to the reporting requirements.

Abstract: Under the Interstate Commerce Act (ICA) [1], the Commission is authorized and empowered to make investigations and to collect and record data to the extent FERC may consider to be necessary or useful for the purpose of carrying out the provisions of the ICA. FERC must ensure just and reasonable rates for transportation of crude oil and petroleum products by pipelines in interstate commerce.

The Commission uses the information collected by FERC Form 6–Q to carry out its responsibilities in implementing the statutory provisions of the ICA to include the authority to prescribe rules and regulations concerning accounts, records, and memoranda, as necessary or appropriate. Financial accounting and reporting provides necessary information concerning a company's past performance and its future prospects. Without reliable financial statements prepared in accordance with the Commission's Uniform System of Accounts and related regulations, the Commission would be unable to accurately determine the costs that relate to a particular time period, service, or line of business.

The Commission uses data from the FERC Form 6–Q to assist in:

1. Implementation of its financial audits and programs,

2. continuous review of the financial condition of regulated companies,

3. assessment of energy markets,

4. rate proceedings and economic analyses, and

5. research for use in litigation.

Financial information reported on the quarterly FERC Form 6–Q provides FERC, as well as customers, investors and others, an important tool to help identify emerging trends and issues affecting jurisdictional entities within the energy industry. It also provides timely disclosures of the impacts that new accounting standards, or changes in existing standards, have on jurisdictional entities, as well as the economic effects of significant transactions, events, and circumstances. The reporting of this information by jurisdictional entities assists the Commission in its analysis of profitability, efficiency, risk, and in its overall monitoring.

Type of Respondents: Oil Pipelines.

Estimate of Annual Burden [2] The Commission estimates the total Public Reporting Burden for this information collection as:

[1] 49 U.S.C. Part 1, Section 20, 54 Stat. 916.

[2] Burden is defined as the total time, effort, or financial resources expended by persons to generate, maintain, retain, or disclose or provide information to or for a Federal agency. For further explanation of what is included in the information collection burden, reference 5 Code of Federal Regulations 1320.3.

FERC FORM 6–Q—QUARTERLY FINANCIAL REPORT OF OIL PIPELINE COMPANIES

Number of respondents (A)	Number of responses per respondent (B)	Total number of responses (A) × (B) = (C)	Average burden hours per response (D)	Estimated total annual burden (C) × (D)
155	3	465	150	69,750

The total estimated annual cost burden to respondents is $4,882,500 [69,750 hours * $70/hour[3] = $4,882,500].

Comments: Comments are invited on: (1) Whether the collection of information is necessary for the proper performance of the functions of the Commission, including whether the information will have practical utility; (2) the accuracy of the agency's estimate of the burden and cost of the collection of information, including the validity of the methodology and assumptions used; (3) ways to enhance the quality, utility and clarity of the information collection; and (4) ways to minimize the burden of the collection of information on those who are to respond, including the use of automated collection techniques or other forms of information technology.

Dated: April 17, 2013.

Kimberly D. Bose,

Secretary.

[FR Doc. 2013–09614 Filed 4–23–13; 8:45 am]

BILLING CODE 6717–01–P

[3] FY2013 Estimated Average Hourly Cost per FERC FTE, including salary + benefits.

DEPARTMENT OF ENERGY

Federal Energy Regulatory Commission

[Docket No. IC12–18–000]

Commission Information Collection Activities (FERC–500 and FERC–505); Comment Request

AGENCY: Federal Energy Regulatory Commission, DOE.

ACTION: Comment request.

SUMMARY: In compliance with the requirements of the Paperwork Reduction Act of 1995, 44 U.S.C. 3507(a)(1)(D), the Federal Energy Regulatory Commission (Commission or FERC) is submitting the information collections Application for License/Relicense for Water Projects with Greater than 5 Megawatt Capacity (FERC–500), and Application for License/Relicense for Water Projects with 5 Megawatt or Less Capacity (FERC–505) to the Office of Management and Budget (OMB) for review of the information collection requirements. Any interested person may file comments directly with OMB and should address a copy of those comments to the Commission as explained below. The Commission published notices in the **Federal Register** (77 FR 56636, 9/13/2012, and 77 FR 73631, 12/11/2012) requesting public comments. FERC received no comments on the FERC–500 and FERC–505 for either notice and is making this notation in its submittal to OMB.

The Commission is issuing this 15-day public notice due to a change of the estimated burden figures. Upon further review, the Commission found that the previously approved burden estimates (i.e. the numbers presented here) should be used.

DATES: Comments on the collections of information are due by May 9, 2013.

ADDRESSES: Comments filed with OMB, identified by the OMB Control Nos. 1902–0058 (FERC–500) and/or 1902–0114 (FERC–505), should be sent via email to the Office of Information and Regulatory Affairs: *oira_submission@omb.gov*, Attention: Federal Energy Regulatory Commission Desk Officer. The Desk Officer may also be reached via telephone at 202–395–4718.

A copy of the comments should also be sent to the Federal Energy Regulatory Commission, identified by the Docket No. IC12–18–000, by one of the following methods:

- *eFiling at Commission's Web site: http://www.ferc.gov/docs-filing/efiling.asp.*
- *Mail/Hand Delivery/Courier:* Federal Energy Regulatory Commission, Secretary of the Commission, 888 First Street NE., Washington, DC 20426.

Instructions: All submissions must be formatted and filed in accordance with submission guidelines at: *http://www.ferc.gov/help/submission-guide.asp.* For user assistance contact FERC Online Support by email at *ferconlinesupport@ferc.gov*, or by phone at: (866) 208–3676 (toll-free), or (202) 502–8659 for TTY.

Docket: Users interested in receiving automatic notification of activity in this docket or in viewing/downloading comments and issuances in this docket may do so at *http://www.ferc.gov/docs-filing/docs-filing.asp.*

FOR FURTHER INFORMATION CONTACT: Ellen Brown may be reached by email at *DataClearance@FERC.gov,* by telephone at (202) 502–8663, and by fax at (202) 273–0873.

SUPPLEMENTARY INFORMATION:

Titles: FERC–500: Application for License/Relicense for Water Projects with Greater than 5 Megawatt Capacity; FERC–505: Application for License/Relicense for Water Projects with 5 Megawatt or Less Capacity.

OMB Control Nos.: FERC–500 (1902–0058); FERC–505 (1902–0114).

Type of Request: 16 U.S.C. 797(e) authorizes the Commission to issue licenses to citizens of the United States for the purpose of constructing, operating, and maintaining dams, across, along, from, or within waterways over which Congress has jurisdiction. The Electric Consumers Protection Act amended the Federal Power Act to provide the Commission with the responsibility of issuing licenses for non-federal hydroelectric plants. 16 U.S.C. 797(e) also requires the Commission to give equal consideration to preserving energy conservation, the protection, mitigation of damage to, and enhancement of, fish and wildlife, the protection of recreational opportunities, and the preservation of other aspects of environmental quality when approving licenses. Finally, 16 U.S.C. 799 stipulates conditions upon which the Commission issues hydroelectric licenses.

The Commission requires all hydroelectric license applications to address a variety of environmental concerns. Many of these concerns address environmental requirements developed by other agencies. The applicants must provide facts in order for the Commission to understand and resolve potential environmental problems associated with the application in the interests of the United States public.

Types of Respondents: Non-federal hydroelectric plants greater than 5 megawatt capacity (FERC–500); non-federal hydroelectric plants 5 megawatts or less capacity (FERC–505).

Estimate of Annual Burden: [1] The Commission estimates the total Public Reporting Burden for each information collection as:

FERC—500 (IC12–18–000) APPLICATION FOR LICENSE/RELICENSE FOR WATER PROJECTS WITH GREATER THAN 5 MEGAWATT CAPACITY

	Number of respondents (A)	Number of responses per respondent (B)	Total number of responses (A) * (B) = (C)	Average burden hours per response (D)	Estimated total annual burden (C) * (D)
Non-federal hydroelectric plants greater than 5 megawatt capacity	6	1	6	105,839.5	635,037

FERC—505 (IC12–18–000) APPLICATION FOR LICENSE/RELICENSE FOR WATER PROJECTS WITH 5 MEGAWATT OR LESS CAPACITY

	Number of respondents (A)	Number of responses per respondent (B)	Total number of responses (A) * (B) = C	Average burden hours per response (D)	Estimated total annual burden (C) * (D)
Non-federal hydroelectric plants 5 megawatts or less capacity	16	1	16	3,674	58,782

FERC–500 total estimated annual cost burden to respondents is $43,823,659 [(635,037 hours ÷ 2080 hours/year [2]) * $143,540/year [3] = $43,823,659]

FERC–505: total estimated annual cost burden to respondents is $4,056,523 [(58,782 hours ÷ 2080 hours/year) * $143,540/year = $4,056,523]

Comments: Comments are invited on: (1) Whether the collections of information are necessary for the proper performance of the functions of the Commission, including whether the information will have practical utility; (2) the accuracy of the agency's estimate of the burden and cost of the collections of information, including the validity of the methodology and assumptions used; (3) ways to enhance the quality, utility and clarity of the information collections; and (4) ways to minimize the burden of the collections of information on those who are to respond, including the use of automated collection techniques or other forms of information technology.

Dated: April 16, 2013.

Kimberly D. Bose,

Secretary.

[FR Doc. 2013–09611 Filed 4–23–13; 8:45 am]

BILLING CODE 6717–01–P

[1] The Commission defines burden as the total time, effort, or financial resources expended by persons to generate, maintain, retain, or disclose or provide information to or for a Federal agency. For further explanation of what is included in the information collection burden, reference 5 Code of Federal Regulations 1320.3.

[2] 2080 hours = 52 weeks * 40 hours per week (i.e. 1 year of full-time employment).

[3] Average salary plus benefits per full-time equivalent employee.

DEPARTMENT OF ENERGY

Federal Energy Regulatory Commission

[Docket No. CP13–131–000]

Transcontinental Gas Pipe Line Company, LLC; Notice of Application

Take notice that on April 9, 2013, Transcontinental Gas Pipe Line Company, LLC (Transco), P.O. Box 1396, Houston, Texas 77251, filed in Docket No. CP13–131–000, a request for authority, pursuant section 7(b) of the Natural Gas Act and Commission regulations, to abandon, in place, certain pipeline facilities located in offshore Louisiana adjacent to South Marsh Island Block 49 of Transco's Southeast Louisiana Lateral. Specifically, Transco proposes to abandon approximately 57 miles of supply laterals known as the SMI 49 Laterals. Transco states that the requested abandonment will have no impact on the daily design capacity or operating conditions on Transco's pipeline system, all as more fully set forth in the application, which is on file with the Commission and open to public inspection. This filing is accessible on-line at *http://www.ferc.gov*, using the ''eLibrary'' link and is available for review in the Commission's Public Reference Room in Washington, DC. There is an ''eSubscription'' link on the Web site that enables subscribers to receive email notification when a document is added to a subscribed docket(s). For assistance with any FERC Online service, please email *FERCOnlineSupport@ferc.gov,* or call (866) 208–3676 (toll free). For TTY, call (202) 502–8659.

Any questions regarding this application should be directed Ingrid Germany, Staff Analyst, Certificates & Tariffs, Transcontinental Gas Pipe Line Company, LLC, P.O. Box 1396, Houston, Texas 77251, and telephone no. (713) 215–4015.

Pursuant to section 157.9 of the Commission's rules, 18 CFR 157.9, within 90 days of this Notice the Commission staff will either: complete its environmental assessment (EA) and place it into the Commission's public record (eLibrary) for this proceeding; or issue a Notice of Schedule for Environmental Review. If a Notice of Schedule for Environmental Review is issued, it will indicate, among other milestones, the anticipated date for the Commission staff's issuance of the final environmental impact statement (FEIS) or EA for this proposal. The filing of the EA in the Commission's public record for this proceeding or the issuance of a Notice of Schedule for Environmental Review will serve to notify federal and state agencies of the timing for the completion of all necessary reviews, and the subsequent need to complete all

federal authorizations within 90 days of the date of issuance of the Commission staff's FEIS or EA.

There are two ways to become involved in the Commission's review of this project. First, any person wishing to obtain legal status by becoming a party to the proceedings for this project should, on or before the comment date stated below file with the Federal Energy Regulatory Commission, 888 First Street NE., Washington, DC 20426, a motion to intervene in accordance with the requirements of the Commission's Rules of Practice and Procedure (18 CFR 385.214 or 385.211) and the Regulations under the NGA (18 CFR 157.10). A person obtaining party status will be placed on the service list maintained by the Secretary of the Commission and will receive copies of all documents filed by the applicant and by all other parties. A party must submit 7 copies of filings made in the proceeding with the Commission and must mail a copy to the applicant and to every other party. Only parties to the proceeding can ask for court review of Commission orders in the proceeding.

However, a person does not have to intervene in order to have comments considered. The second way to participate is by filing with the Secretary of the Commission, as soon as possible, an original and two copies of comments in support of or in opposition to this project. The Commission will consider these comments in determining the appropriate action to be taken, but the filing of a comment alone will not serve to make the filer a party to the proceeding. The Commission's rules require that persons filing comments in opposition to the project provide copies of their protests only to the party or parties directly involved in the protest.

Persons who wish to comment only on the environmental review of this project should submit an original and two copies of their comments to the Secretary of the Commission. Environmental commentors will be placed on the Commission's environmental mailing list, will receive copies of the environmental documents, and will be notified of meetings associated with the Commission's environmental review process. Environmental commentors will not be required to serve copies of filed documents on all other parties. However, the non-party commentors will not receive copies of all documents filed by other parties or issued by the Commission (except for the mailing of environmental documents issued by the Commission) and will not have the right to seek court review of the Commission's final order.

The Commission strongly encourages electronic filings of comments, protests and interventions in lieu of paper using the ''eFiling'' link at *http://www.ferc.gov.* Persons unable to file electronically should submit an original and 5 copies of the protest or intervention to the Federal Energy Regulatory Commission, 888 First Street NE., Washington, DC 20426.

Comment Date: 5:00 p.m. Eastern Time on May 8, 2013.

Dated: April 17, 2013.

Kimberly D. Bose,

Secretary.

[FR Doc. 2013–09615 Filed 4–23–13; 8:45 am]

BILLING CODE 6717–01–P

DEPARTMENT OF ENERGY

Federal Energy Regulatory Commission

[Docket Nos. CP13–132–000]

Transcontinental Gas Pipe Line Company, LLC; Notice of Application

Take notice that on April 9, 2013, Transcontinental Gas Pipe Line Company, LLC (Transco), Post Office Box 1396, Houston, Texas 77251, filed in Docket No. CP13–132–000 an application under Section 7 of the Natural Gas Act and Part 157 the Commission's Rules and Regulations for all the necessary authorizations required to construct, own and operate its Northeast Connector Project (Project) in New York. The Project is an expansion of Transco's existing pipeline system which will enable Transco provide an additional 100,000 dekatherms per day of firm transportation service from Transco's existing Compressor Station 195 to an interconnection between Transco's existing Lower New York Bay Lateral at or near milepost 34.31 in New York State waters and the proposed Rockaway Delivery Lateral.

The Project will include compressor unit modifications and the net addition of 16,940 horsepower of compression at three existing compressor stations, and construction or modification of related appurtenant underground and above ground facilities. No expansion of the pipeline is required. In addition to the firm service to be provided by the Project, National Grid NY can use its secondary rights to make deliveries to other points in Zone 6, including the existing Narrows delivery point and the existing Manhattan and Central Manhattan delivery points via the New York Facilities Group, all as more fully set forth in the application which is on file with the Commission and open to public inspection.

Copies of this filing are available for review at the Commission in the Public Reference Room, or may be viewed on the Commission's Web site Web at *http://www.ferc.gov* using the ''eLibrary'' link. Enter the docket number excluding the last three digits in the docket number field to access the document. For assistance, contact FERC at *FERCOnlineSupport@ferc.gov* or call toll-free, (886) 208–3676 or TTY, (202) 502–8659.

Pursuant to Section 157.9 of the Commission's rules, 18 CFR 157.9, within 90 days of this Notice the Commission staff will either: complete its environmental assessment (EA) and place it into the Commission's public record (eLibrary) for this proceeding; or issue a Notice of Schedule for Environmental Review. If a Notice of Schedule for Environmental Review is issued, it will indicate, among other milestones, the anticipated date for the Commission staff's issuance of the final environmental impact statement (FEIS) or EA for this proposal. The filing of the EA in the Commission's public record for this proceeding or the issuance of a Notice of Schedule for Environmental Review will serve to notify federal and state agencies of the timing for the completion of all necessary reviews, and the subsequent need to complete all federal authorizations within 90 days of the date of issuance of the Commission staff's FEIS or EA.

Questions regarding this application should be directed to Bill Hammons, P.O. Box 1396, Houston, Texas 77251; phone (713) 215–2130. Transco has also established a public Web site for the Rockaway Project (*http://www.williams.com/rockaway*), a toll-free phone number (1–866–455–9103) so that parties can call with questions about the Rockaway Project, and an email support address (*PipelineExpansion@williams.com*).

There are two ways to become involved in the Commission's review of this project. First, any person wishing to obtain legal status by becoming a party to the proceedings for this project should, before the comment date of this notice, file with the Federal Energy Regulatory Commission, 888 First Street NE., Washington, DC 20426, a motion to intervene in accordance with the requirements of the Commission's Rules of Practice and Procedure (18 CFR 385.214 or 385.211) and the Regulations under the NGA (18 CFR 157.10). A person obtaining party status will be placed on the service list maintained by the Secretary of the Commission and

will receive copies of all documents filed by the applicant and by all other parties. A party must submit 5 copies of filings made with the Commission and must mail a copy to the applicant and to every other party in the proceeding. Only parties to the proceeding can ask for court review of Commission orders in the proceeding.

However, a person does not have to intervene in order to have comments considered. The second way to participate is by filing with the Secretary of the Commission, as soon as possible, an original and two copies of comments in support of or in opposition to this project. The Commission will consider these comments in determining the appropriate action to be taken, but the filing of a comment alone will not serve to make the filer a party to the proceeding. The Commission's rules require that persons filing comments in opposition to the project provide copies of their protests only to the party or parties directly involved in the protest.

Persons who wish to comment only on the environmental review of this project should submit an original and two copies of their comments to the Secretary of the Commission. Environmental commenters will be placed on the Commission's environmental mailing list, will receive copies of the environmental documents, and will be notified of meetings associated with the Commission's environmental review process. Environmental commenters will not be required to serve copies of filed documents on all other parties. However, the non-party commenters will not receive copies of all documents filed by other parties or issued by the Commission (except for the mailing of environmental documents issued by the Commission) and will not have the right to seek court review of the Commission's final order.

Comments, protests and interventions may be filed electronically via the Internet in lieu of paper. See, 18 CFR 385.2001(a)(1)(iii) and the instructions on the Commission's Web site under the ''e-Filing'' link.

Comment Date: 5:00 p.m. Eastern Time on May 8, 2013.

Dated: April 17, 2013.

Kimberly D. Bose,

Secretary.

[FR Doc. 2013–09616 Filed 4–23–13; 8:45 am]

BILLING CODE 6717–01–P

DEPARTMENT OF ENERGY

Federal Energy Regulatory Commission

Combined Notice of Filings #1

Take notice that the Commission received the following electric corporate filings:

Docket Numbers: EC13–92–000.
Applicants: Alta Wind X, LLC, Alta Wind XI, LLC, Alta Windpower Development, LLC.
Description: Application for Authorization for Disposition of Jurisdictional Facilities and Request for Expedited Action of Alta Wind X, LLC, et al.
Filed Date: 4/15/13.
Accession Number: 20130415–5207.
Comments Due: 5 p.m. ET 5/6/13.

Take notice that the Commission received the following electric rate filings:

Docket Numbers: ER12–2643–002.
Applicants: California Independent System Operator Corporation.
Description: 2013—04–15 Compliance Filing re RA Deliverability for Distributed Generation to be effective 11/18/2012.
Filed Date: 4/15/13.
Accession Number: 20130415–5170.
Comments Due: 5 p.m. ET 5/6/13.

Docket Numbers: ER13–1007–001.
Applicants: Midwest Independent Transmission System Operator, Inc.
Description: 04–16–2013 SA 2507 ITC-Interstate E&P Errata to be effective 3/1/2013.
Filed Date: 4/16/13.
Accession Number: 20130416–5119.
Comments Due: 5 p.m. ET 5/7/13.

Docket Numbers: ER13–1285–000.
Applicants: Pacific Gas and Electric Company.
Description: WPA under Comprehensive Agreement between PG&E and DWR to be effective 4/16/2013.
Filed Date: 4/15/13.
Accession Number: 20130415–5146.
Comments Due: 5 p.m. ET 5/6/13.

Docket Numbers: ER13–1286–000.
Applicants: Midwest Independent Transmission System Operator, Inc.
Description: 04–15–2013 SA 2455 DEGS Wind-METC Termination to be effective 6/14/2013.
Filed Date: 4/15/13.
Accession Number: 20130415–5152.
Comments Due: 5 p.m. ET 5/6/13.

Docket Numbers: ER13–1287–000.
Applicants: Lakeside Beaver Falls LLC.
Description: Baseline new to be effective 4/15/2013.
Filed Date: 4/15/13.
Accession Number: 20130415–5169.
Comments Due: 5 p.m. ET 5/6/13.

Docket Numbers: ER13–1287–001; ER13–1288–001; ER11–4634–001.
Applicants: Lakeside Beaver Falls LLC, Lakeside Syracuse LLC, Hazleton Generation LLC.
Description: Notice of Non-Material Change in Status of Lakeside Beaver Falls LLC, et al.
Filed Date: 4/15/13.
Accession Number: 20130416–5137.
Comments Due: 5 p.m. ET 5/6/13.

Docket Numbers: ER13–1288–000.
Applicants: Lakeside Syracuse LLC.
Description: Baseline new to be effective 4/15/2013.
Filed Date: 4/15/13.
Accession Number: 20130415–5172.
Comments Due: 5 p.m. ET 5/6/13.

Docket Numbers: ER13–1289–000.
Applicants: Lakeside Syracuse LLC.
Description: Cancellation to be effective 4/15/2013.
Filed Date: 4/15/13.
Accession Number: 20130415–5178.
Comments Due: 5 p.m. ET 5/6/13.

Docket Numbers: ER13–1290–000.
Applicants: Lakeside Beaver Falls LLC.
Description: Cancellation to be effective 4/15/2013.
Filed Date: 4/15/13.
Accession Number: 20130415–5186.
Comments Due: 5 p.m. ET 5/6/13.

Docket Numbers: ER13–1291–000.
Applicants: Dominion Energy Marketing, Inc.
Description: Dominion Energy Marketing, Inc. submits Request for Additional Cost Recovery under Section III.A.15, Appendix A to the ISO New England Inc. Tariff.
Filed Date: 4/15/13.
Accession Number: 20130415–5202.
Comments Due: 5 p.m. ET 5/6/13.

Docket Numbers: ER13–1292–000.
Applicants: Southwest Power Pool, Inc.
Description: Compliance Filing to Order No. 764 to be effective 6/16/2013.
Filed Date: 4/16/13.
Accession Number: 20130416–5005.
Comments Due: 5 p.m. ET 5/7/13.

Docket Numbers: ER13–1293–000.
Applicants: Midwest Independent Transmission System Operator, Inc.
Description: 04–16–2013 SA 2517 DTE Electric-ITC E&P to be effective 4/17/2013.
Filed Date: 4/16/13.
Accession Number: 20130416–5006.
Comments Due: 5 p.m. ET 5/7/13.

Docket Numbers: ER13–1294–000.
Applicants: Southwest Power Pool, Inc.

Description: 1154R8 Associated Electric Cooperative NITSA and NOA to be effective 3/17/2013.

Filed Date: 4/16/13.

Accession Number: 20130416–5020.

Comments Due: 5 p.m. ET 5/7/13.

Docket Numbers: ER13–1295–000.

Applicants: WestConnect.

Description: WestConnect Point-to-Point Regional Transmission Service Participation Agreement to be effective 7/1/2013.

Filed Date: 4/16/13.

Accession Number: 20130416–5049.

Comments Due: 5 p.m. ET 5/7/13.

Docket Numbers: ER13–1296–000.

Applicants: Arizona Public Service Company.

Description: WestConnect Regional Point-to-Point Transmission Service Tariff to be effective 7/1/2013.

Filed Date: 4/16/13.

Accession Number: 20130416–5058.

Comments Due: 5 p.m. ET 5/7/13.

Docket Numbers: ER13–1297–000.

Applicants: Arizona Public Service Company.

Description: Cancellation of APS Rate Schedule No. 257—Foothills Solar E&P Agreement to be effective 6/14/2013.

Filed Date: 4/16/13.

Accession Number: 20130416–5090.

Comments Due: 5 p.m. ET 5/7/13.

Docket Numbers: ER13–1298–000.

Applicants: Mega Energy Holdings LLC.

Description: Baseline New to be effective 5/1/2013.

Filed Date: 4/16/13.

Accession Number: 20130416–5118.

Comments Due: 5 p.m. ET 5/7/13.

Docket Numbers: ER13–1299–000.

Applicants: PacifiCorp.

Description: BPA AC Intertie O&M Agreement to be effective 9/22/2010.

Filed Date: 4/16/13.

Accession Number: 20130416–5129.

Comments Due: 5 p.m. ET 5/7/13.

Take notice that the Commission received the following open access transmission tariff filings:

Docket Numbers: OA09–22–005.

Applicants: Florida Power & Light Company.

Description: Annual Compliance Report Regarding Penalties for Unreserved Use of Florida Power & Light Company.

Filed Date: 4/15/13.

Accession Number: 20130415–5200.

Comments Due: 5 p.m. ET 5/6/13.

Docket Numbers: OA13–4–000.

Applicants: Midwest Independent Transmission System Operator, Inc.

Description: Midwest Independent Transmission System Operator, Inc. submits Informational Filing Regarding Unreserved Use and Late Study Penalties in 2010, 2011 and 2012.

Filed Date: 4/15/13.

Accession Number: 20130415–5216.

Comments Due: 5 p.m. ET 5/6/13.

The filings are accessible in the Commission's eLibrary system by clicking on the links or querying the docket number.

Any person desiring to intervene or protest in any of the above proceedings must file in accordance with Rules 211 and 214 of the Commission's Regulations (18 CFR 385.211 and 385.214) on or before 5:00 p.m. Eastern time on the specified comment date. Protests may be considered, but intervention is necessary to become a party to the proceeding.

eFiling is encouraged. More detailed information relating to filing requirements, interventions, protests, service, and qualifying facilities filings can be found at: *http://www.ferc.gov/docs-filing/efiling/filing-req.pdf.* For other information, call (866) 208–3676 (toll free). For TTY, call (202) 502–8659.

Dated: April 16, 2013.

Nathaniel J. Davis, Sr.,

Deputy Secretary.

[FR Doc. 2013–09644 Filed 4–23–13; 8:45 am]

BILLING CODE 6717–01–P

DEPARTMENT OF ENERGY

Federal Energy Regulatory Commission

[Docket No. EL13–58–000]

J.P. Morgan Ventures Energy Corp. v. Midwest Independent System Operator, Inc. PJM Interconnection, L.L.C.; Notice of Complaint

Take notice that on April 10, 2013, J.P. Morgan Ventures Energy Corporation (JPMVEC or Complainant) filed a formal complaint against Midwest Independent System Operator, Inc. and PJM Interconnection, L.L.C. (collectively, Respondents), pursuant to section 206 of the Federal Power Act and Rule 206 of the Commission's rules of Practice and Procedure, alleging that the Respondents' tariffs should be amended if necessary to implement the Commission's orders implementing JPMVEC's suspension of its market-based rate authority.

JPMVEC certifies that copies of the complaint were served on the contacts for Respondents as listed on the Commission's list of Corporate Officials and on parties and regulatory agencies JPMVEC reasonably expects to be affected by this complaint.

Any person desiring to intervene or to protest this filing must file in accordance with Rules 211 and 214 of the Commission's Rules of Practice and Procedure (18 CFR 385.211, 385.214). Protests will be considered by the Commission in determining the appropriate action to be taken, but will not serve to make protestants parties to the proceeding. Any person wishing to become a party must file a notice of intervention or motion to intervene, as appropriate. The Respondent's answer and all interventions, or protests must be filed on or before the comment date. The Respondent's answer, motions to intervene, and protests must be served on the Complainants.

The Commission encourages electronic submission of protests and interventions in lieu of paper using the ''eFiling'' link at *http://www.ferc.gov.* Persons unable to file electronically should submit an original and 14 copies of the protest or intervention to the Federal Energy Regulatory Commission, 888 First Street NE., Washington, DC 20426.

This filing is accessible on-line at *http://www.ferc.gov*, using the ''eLibrary'' link and is available for review in the Commission's Public Reference Room in Washington, DC. There is an ''eSubscription'' link on the Web site that enables subscribers to receive email notification when a document is added to a subscribed docket(s). For assistance with any FERC Online service, please email *FERCOnlineSupport@ferc.gov*, or call (866) 208–3676 (toll free). For TTY, call (202) 502–8659.

Comment Date: 5:00 p.m. Eastern Time on April 26, 2013.

Dated: April 16, 2013.

Kimberly D. Bose,

Secretary.

[FR Doc. 2013–09612 Filed 4–23–13; 8:45 am]

BILLING CODE 6717–01–P

DEPARTMENT OF ENERGY

Federal Energy Regulatory Commission

[Docket No. CP13–130–000]

Texas Eastern Transmission, LP; Notice of Request Under Blanket Authorization

Take notice that on April 9, 2013, Texas Eastern Transmission, LP, (Texas Eastern), P.O. Box 1642, Houston, Texas 77251–1642, filed in Docket No. CP13–130–000, a prior notice request pursuant to sections 157.205 and 157.208 of the Commission's regulations under the Natural Gas Act (NGA). Texas Eastern seeks authorization to perform

replacement of the portions of existing Lines 1–B–1 and 1–B–2 underlying the Schuylkill River in Montgomery County, Pennsylvania. Texas Eastern proposes to perform these activities under its blanket certificate issued in Docket No. CP82–535–000 [21 FERC ¶ 62,199 (1982)], all as more fully set forth in the application which is on file with the Commission and open to public inspection.

The filing may be viewed on the web at *http://www.ferc.gov* using the ''eLibrary'' link. Enter the docket number excluding the last three digits in the docket number field to access the document. For assistance, contact FERC at *FERCOnlineSupport@ferc.gov* or call toll-free, (886) 208–3676 or TYY, (202) 502–8659.

Any questions regarding this application should be directed to Berk Donaldson, Director, Rates & Certificates, Texas Eastern Transmission, LP, P.O. Box 1642, Houston, Texas, 77251–1642, or by calling (713) 627–4488 (telephone) or (713) 627–5947 (fax), *bdonaldson@spectraenergy.com*.

Any person or the Commission's Staff may, within 60 days after the issuance of the instant notice by the Commission, file pursuant to Rule 214 of the Commission's Procedural Rules (18 CFR 385.214) a motion to intervene or notice of intervention and, pursuant to section 157.205 of the Commission's Regulations under the NGA (18 CFR 157.205) a protest to the request. If no protest is filed within the time allowed therefore, the proposed activity shall be deemed to be authorized effective the day after the time allowed for protest. If a protest is filed and not withdrawn within 30 days after the time allowed for filing a protest, the instant request shall be treated as an application for authorization pursuant to section 7 of the NGA.

The Commission strongly encourages electronic filings of comments, protests, and interventions via the internet in lieu of paper. See 18 CFR 385.2001(a)(1)(iii) and the instructions on the Commission's Web site (www.ferc.gov) under the ''e-Filing'' link. Persons unable to file electronically should submit an original and 14 copies of the protest or intervention to the Federal Energy Regulatory Commission, 888 First Street NE., Washington, DC 20426.

Dated: April 17, 2013.

Kimberly D. Bose,

Secretary.

[FR Doc. 2013–09610 Filed 4–23–13; 8:45 am]

BILLING CODE 6717–01–P

DEPARTMENT OF ENERGY

Federal Energy Regulatory Commission

Notice of Commission Staff Attendance

The Federal Energy Regulatory Commission (Commission) hereby gives notice that members of the Commission's staff may attend the following joint stakeholder meeting related to the transmission planning activities of PJM Interconnection, L.L.C. (PJM), Independent System Operator New England, Inc. (ISO–NE), and New York Independent System Operator, Inc. (NYISO):

Inter-Regional Planning Stakeholder Advisory Committee—New York/New England

April 24, 2013, 8:00 a.m.—10:00 a.m., Local Time

The above-referenced meeting will be held over conference call.

The above-referenced meeting is open to stakeholders.

Further information may be found at *www.pjm.com/committees-and-groups/stakeholder-meetings/stakeholder-groups/ipsac-ny-ne.aspx*.

The discussions at the meeting described above may address matters at issue in the following proceedings:

Docket No. ER08–1281, *New York Independent System Operator, Inc.*
Docket No. EL05–121, *PJM Interconnection, L.L.C.*
Docket No. EL10–52, *Central Transmission, LLC v. PJM Interconnection, L.L.C.*
Docket No. ER10–253 and EL10–14, *Primary Power, L.L.C.*
Docket No. EL12–69, *Primary Power LLC* v. *PJM Interconnection, L.L.C.*
Docket No. ER11–1844, *Midwest Independent Transmission System Operator, Inc.*
Docket No. ER12–1178, *PJM Interconnection, L.L.C.*
Docket No. ER13–90, *Public Service Electric and Gas Company and PJM Interconnection, L.L.C.*
Docket No. ER13–102–000, *New York Independent System Operator, Inc.*
Docket No. ER13–193–000, *ISO New England Inc.*
Docket No. ER13–195, *Indicated PJM Transmission Owners*
Docket No. ER13–196–000, *ISO New England Inc.*
Docket No. ER13–198, *PJM Interconnection, L.L.C.*
Docket No. ER13–397, *PJM Interconnection, L.L.C.*
Docket No. ER13–673, *PJM Interconnection, L.L.C.*
Docket No. ER13–703, *PJM Interconnection, L.L.C.*
Docket No. ER13–887, *PJM Interconnection, L.L.C.*
Docket No. ER13–1052, *PJM Interconnection, L.L.C. and the Midwest Independent Transmission System Operator, Inc.*
Docket No. ER13–1054, *PJM Interconnection, L.L.C. and the Midwest Independent Transmission System Operator, Inc.*

For more information, contact Jonathan Fernandez, Office of Energy Market Regulation, Federal Energy Regulatory Commission at (202) 502–6604 or *jonathan.fernandez@ferc.gov*.

Dated: April 17, 2013.

Kimberly D. Bose,

Secretary.

[FR Doc. 2013–09613 Filed 4–23–13; 8:45 am]

BILLING CODE 6717–01–P

ENVIRONMENTAL PROTECTION AGENCY

[EPA–HQ–OECA–2012–0695; FRL–9530–4]

Agency Information Collection Activities; Submission to OMB for Review and Approval; Comment Request; NESHAP for Site Remediation (Renewal), EPA ICR Number 2062.05

AGENCY: Environmental Protection Agency (EPA).

ACTION: Notice.

SUMMARY: In compliance with the Paperwork Reduction Act (44 U.S.C. 3501 *et seq.*), this document announces that an Information Collection Request (ICR) has been forwarded to the Office of Management and Budget (OMB) for review and approval. This is a request to renew an existing approved collection. The ICR which is abstracted below describes the nature of the collection and the estimated burden and cost.

DATES: Additional comments may be submitted on or before May 24, 2013.

ADDRESSES: Submit your comments, referencing docket ID number EPA–HQ–OECA–2012–0695, to: (1) EPA online, using *www.regulations.gov* (our preferred method), or by email to: *docket.oeca@epa.gov,* or by mail to: EPA Docket Center (EPA/DC), Environmental Protection Agency, Enforcement and Compliance Docket and Information Center, mail code 28221T, 1200 Pennsylvania Avenue NW., Washington, DC 20460; and (2) OMB at: Office of Information and Regulatory Affairs, Office of Management and Budget

(OMB), Attention: Desk Officer for EPA, 725 17th Street NW., Washington, DC 20503.

FOR FURTHER INFORMATION CONTACT: Learia Williams, Monitoring, Assistance, and Media Programs Division, Office of Compliance, Mail Code 2227A, Environmental Protection Agency, 1200 Pennsylvania Avenue NW., Washington, DC 20460; telephone number: (202) 564–4113; fax number: (202) 564–0050; email address: *williams.learia@epa.gov*.

SUPPLEMENTARY INFORMATION: EPA has submitted the following ICR to OMB for review and approval according to the procedures prescribed in 5 CFR 1320.12. On October 17, 2012 (77 FR 63813), EPA sought comments on this ICR pursuant to 5 CFR 1320.8(d). EPA received no comments. Any additional comments on this ICR should be submitted to both EPA and OMB within 30 days of this notice.

EPA has established a public docket for this ICR under docket ID number EPA–HQ–OECA–2012–0695, which is available for either public viewing online at *http://www.regulations.gov*, or in person viewing at the Enforcement and Compliance Docket in the EPA Docket Center (EPA/DC), EPA West, Room 3334, 1301 Constitution Avenue NW., Washington, DC. The EPA Docket Center Public Reading Room is open from 8:30 a.m. to 4:30 p.m., Monday through Friday, excluding legal holidays. The telephone number for the Reading Room is (202) 566–1744, and the telephone number for the Enforcement and Compliance Docket is (202) 566–1752.

Use EPA's electronic docket and comment system at *http://www.regulations.gov* to either submit or view public comments, access the index listing of the contents of the docket, and to access those documents in the docket that are available electronically. Once in the system, select ''docket search,'' then key in the docket ID number identified above. Please note that EPA's policy is that public comments, whether submitted electronically or in paper, will be made available for public viewing at *http://www.regulations.gov* as EPA receives them and without change, unless the comment contains copyrighted material, Confidentiality of Business Information (CBI), or other information whose public disclosure is restricted by statute. For further information about the electronic docket, go to *www.regulations.gov*.

Title: NESHAP for Site Remediation (Renewal).

ICR Numbers: EPA ICR Number 2062.05, OMB Control Number 2060–0534.

ICR Status: This ICR is scheduled to expire on June 30, 2013. Under OMB regulations, the Agency may continue to either conduct or sponsor the collection of information while this submission is pending at OMB.

Abstract: The affected entities are subject to the General Provisions of the NESHAP at 40 CFR part 63, subpart A, and any changes, or additions to the Provisions specified at 40 CFR part 63, subpart GGGGG.

Owners or operators of the affected facilities must submit an initial notification report, performance tests, and periodic reports and results. Owners or operators are also required to maintain records of the occurrence and duration of any startup, shutdown, or malfunction in the operation of an affected facility, or any period during which the monitoring system is inoperative. Reports are required semiannually at a minimum.

Burden Statement: The annual public reporting and recordkeeping burden for this collection of information is estimated to average 245 hours per response. ''Burden'' means the total time, effort, or financial resources expended by persons to generate, maintain, retain, or disclose or provide information to or for a Federal agency. This includes the time needed to review instructions; develop, acquire, install, and utilize technology and systems for the purposes of collecting, validating, and verifying information, processing and maintaining information, and disclosing and providing information; adjust the existing ways to comply with any previously applicable instructions and requirements which have subsequently changed; train personnel to be able to respond to a collection of information; search data sources; complete and review the collection of information; and transmit or otherwise disclose the information.

Respondents/Affected Entities: Owners or operator of site remediation facilities.

Estimated Number of Respondents: 286.

Frequency of Response: Initially, occasionally, and semiannually.

Estimated Total Annual Hour Burden: 140,338.

Estimated Total Annual Cost: $14,302,488, which includes $13,720,488 in labor costs, no capital/startup costs, and $582,000 in operation and maintenance (O&M) costs.

Changes in the Estimates: There is an adjustment increase in labor hours and costs from the most recent ICR. This is not due to any program changes. The increase in labor hours is due to a change in the burden calculation methodology. The previous ICR did not account for managerial and clerical hours for some burden activities. This ICR assumes that managerial and clerical hours are 5 percent and 10 percent of technical hours for each burden activity, respectively. The increase in costs is due to an increase in labor rates, as well as the methodology change described above.

John Moses,

Director, Collection Strategies Division.

[FR Doc. 2013–09677 Filed 4–23–13; 8:45 am]

BILLING CODE 6560–50–P

ENVIRONMENTAL PROTECTION AGENCY

[EPA–HQ–RCRA–2012–0890; FRL -9530–5]

Information Collection Request Submitted to OMB for Review and Approval; Comment Request; Solid Waste Disposal Facility Criteria (Renewal)

AGENCY: Environmental Protection Agency (EPA).

ACTION: Notice.

SUMMARY: The Environmental Protection Agency has submitted an information collection request (ICR), Solid Waste Disposal Facility Criteria (Renewal) (EPA ICR No. 1381.10, OMB Control No. 2050–0122) to the Office of Management and Budget (OMB) for review and approval in accordance with the Paperwork Reduction Act (44 U.S.C. 3501 *et seq.*). This is a proposed extension of the ICR, which is currently approved through June 30, 2013. Public comments were previously requested via the **Federal Register** 78 FR 718 on January 4, 2013 during a 60-day comment period. This notice allows for an additional 30 days for public comments. A fuller description of the ICR is given below, including its estimated burden and cost to the public. An Agency may not conduct or sponsor and a person is not required to respond to a collection of information unless it displays a currently valid OMB control number.

DATES: Additional comments may be submitted on or before May 24, 2013.

ADDRESSES: Submit your comments, referencing Docket ID Number EPA–HQ–RCRA–2012–0890, to (1) EPA online using www.regulations.gov (our preferred method), by email to *rcra-docket@epa.gov,* or by mail to: EPA Docket Center, Environmental Protection Agency, Mail Code 28221T,

1200 Pennsylvania Ave. NW., Washington, DC 20460, and (2) OMB via email to *oira_submission@omb.eop.gov.* Address comments to OMB Desk Officer for EPA.

EPA's policy is that all comments received will be included in the public docket without change including any personal information provided, unless the comment includes profanity, threats, information claimed to be Confidential Business Information (CBI) or other information whose disclosure is restricted by statute.

FOR FURTHER INFORMATION CONTACT: Craig Dufficy, Materials Recovery and Waste Management Division, Office of Resource Conservation and Recovery, Mail Code 5304P, Environmental Protection Agency, 1200 Pennsylvania Ave. NW., Washington, DC 20460; telephone number: 703–308–9037; fax number: 703–308–8686; email address: *dufficy.craig@epa.gov.*

SUPPLEMENTARY INFORMATION: Supporting documents which explain in detail the information that the EPA will be collecting are available in the public docket for this ICR. The docket can be viewed online at www.regulations.gov or in person at the EPA Docket Center, EPA West, Room 3334, 1301 Constitution Ave. NW., Washington, DC. The telephone number for the Docket Center is 202–566–1744. For additional information about EPA's public docket, visit *http://www.epa.gov/dockets.*

Abstract: In order to effectively implement and enforce final changes to 40 CFR Part 258 on a State level, owners/operators of municipal solid waste landfills have to comply with the final reporting and recordkeeping requirements. Respondents include owners or operators of new municipal solid waste landfills (MSWLFs), existing MSWLFs, and lateral expansions of existing MSWLFs. The respondents, in complying with 40 CFR Part 258, are required to record information in the facility operating record, pursuant to § 258.29, as it becomes available. The operating record must be supplied to the State as requested until the end of the post-closure care period of the MSWLF. The information collected will be used by the State Director to confirm owner or operator compliance with the regulations under Part 258. These owners or operators could include Federal, State, and local governments, and private waste management companies. Facilities in NAICS codes 9221, 5622, 3252, 3251 and 3253 may be affected by this rule.

Form Numbers: None.

Respondents/affected entities: State/local/tribal governments, private sector.

Respondent's obligation to respond: Mandatory. The respondents, in complying with 40 CFR Part 258, are required to record information in the facility operating record, pursuant to § 258.29, as it becomes available.

Estimated number of respondents: 3,800.

Frequency of response: Once, On occasion.

Total estimated burden: 204,808 hours (per year). Burden is defined at 5 CFR 1320.3(b).

Total estimated Annual cost: $15,438,308, includes $2,210,853 annualized capital or O&M costs.

Changes in the Estimates: There is a decrease of 60 hours in the total estimated respondent burden compared with the ICR currently approved by OMB. This decrease is due to an adjustment for current estimates of burden hours.

John Moses,

Director, Collection Strategies Division.

[FR Doc. 2013–09678 Filed 4–23–13; 8:45 am]

BILLING CODE 6560–50–P

ENVIRONMENTAL PROTECTION AGENCY

[EPA–HQ–OPP–2012–0844; FRL–9383–5]

Product Cancellation Order for Certain Pesticide Registrations

AGENCY: Environmental Protection Agency (EPA).

ACTION: Notice.

SUMMARY: This notice announces EPA's order for the cancellations, voluntarily requested by the registrants and accepted by the Agency, of the products listed in Table 1. and 2. of Unit II., pursuant to the Federal Insecticide, Fungicide, and Rodenticide Act (FIFRA). This cancellation order follows a December 19, 2012 **Federal Register** Notice of Receipt of Request from the registrants listed in Table 3. of Unit II. to voluntarily cancel these technical and end use product registrations. In the December 19, 2012 notice, EPA indicated that it would issue an order implementing the cancellations unless the Agency received substantive comments within the 30-day comment period that would merit its further review of these requests, or unless the registrants withdrew their requests. The Agency received one set of comments on the notice, and the comments did not merit EPA's further review of the request. Further, the registrants did not withdraw their requests. Accordingly, EPA hereby issues in this notice a cancellation order granting the requested cancellations. Any distribution, sale, or use of the products subject to this cancellation order is permitted only in accordance with the terms of this order, including any existing stocks provisions.

DATES: The allethrin series of pyrethroid insecticides includes bioallethrin (PC code 004003), esbiol (004004), esbiothrin (004007), and pynamin forte (004005). The cancellation for all allethrins technical products, listed in Table 1. of Unit II., will be effective September 30, 2015; no use of technical allethrins products to formulate any end use products will be permitted after December 31, 2015; and the cancellation for the allethrins end use products listed in Table 2. of Unit II. will be effective December 31, 2016.

FOR FURTHER INFORMATION CONTACT: Molly Clayton, Pesticide Re-Evaluation Division (7508P), Office of Pesticide Programs, Environmental Protection Agency, 1200 Pennsylvania Ave. NW., Washington, DC 20460–0001; telephone number: (703) 603–0522; fax number: (703) 308–8090; email address: *clayton.molly@epa.gov.*

SUPPLEMENTARY INFORMATION:

I. General Information

A. Does this action apply to me?

This action is directed to the public in general, and may be of interest to a wide range of stakeholders including environmental, human health, and agricultural advocates; the chemical industry; pesticide users; and members of the public interested in the sale, distribution, or use of pesticides. Since others also may be interested, the Agency has not attempted to describe all the specific entities that may be affected by this action.

B. How can I get copies of this document and other related information?

The docket for this action, identified by docket identification (ID) number EPA–HQ–OPP–2012–0844 is available at *http://www.regulations.gov* or at the Office of Pesticide Programs Regulatory Public Docket (OPP Docket) in the Environmental Protection Agency Docket Center (EPA/DC), EPA West Bldg., Rm. 3334, 1301 Constitution Ave. NW., Washington, DC 20460–0001. The Public Reading Room is open from 8:30 a.m. to 4:30 p.m., Monday through Friday, excluding legal holidays. The telephone number for the Public Reading Room is (202) 566–1744, and the telephone number for the OPP Docket is (703) 305–5805. Please review the visitor instructions and additional

information about the docket available at *http://www.epa.gov/dockets.*

II. What action is the agency taking?

This notice announces the cancellation, as requested by registrants of products registered under FIFRA section 3. These registrations are listed in sequence by registration number in Tables 1. and 2. of this unit.

TABLE 1—TECHNICAL PRODUCT CANCELLATIONS

Registration No.	Product name
10308–3	Pynamin Forte Technical.
73049–105	Bioallethrin Technical.
73049–125	Crossfire Technical.
73049–155	Esbiol Technical.
73049–156	Crossfire Technical.
73049–359	Bioallethrin Technical.
73049–394	VBC Bioallethrin 90% Concentrate.
73049–395	VBC Esbiol Concentrate.
73049–399	VBC Esbiothrin.

TABLE 2—END USE PRODUCT CANCELLATIONS

Registration No.	Product name
73049–157	Cypermethrin/Esbiothrin/Piperonyl Butoxide 0.05%/0.1%/0.4% A.
73049–177	DS 205 Insecticide.
73049–178	UltraTec DS 215 Insecticide.
73049–180	DS 530 Insecticide.
73049–183	ULTRATEC DS 210 Insecticide.
73049–184	Ultratec KD AC.
73049–210	DSP 0.25–2.5–25 AC.
73049–354	UltraTec DS OB AC.
73049–389	UltraTec DSP 515 Insecticide.
73049–390	UltraTec DS 105 OB Insecticide.

Table 3. of this unit includes the names and addresses of record for all registrants of the products in Tables 1. and 2. of this unit, in sequence by EPA company number. This number corresponds to the first part of the EPA registration numbers of the products listed in Table 1. of this unit.

TABLE 3—REGISTRANTS OF CANCELLED PRODUCTS

EPA Company No.	Company name and address
10308	Sumitomo Chemical Company, Ltd., 1330 Dillon Heights Avenue, Baltimore, MD 21228–1199.
73049	Valent BioSciences Corporation, 870 Technology Way, Suite 100, Libertyville, IL 60048–6316.

III. Summary of Public Comments Received and Agency Response to Comments

During the comment period, the Agency received comments from ThermaCELL (a division of The Schawbel Corporation), a company that uses an allethrin technical product, for which cancellation was requested, in the formulation of its end use products. In its comments, ThermaCELL asks for additional time to formulate its allethrins end use products, beyond the date of December 31, 2015, as specified in the Notice of Receipt of a Request to Voluntarily Cancel Certain Pesticide Registrations, in order to pursue alternative formulation and product design options. ThermaCELL also recommended certain changes to the proposed cancellation order. For example, ThermaCELL asked that EPA change the definition of existing stocks to allow existing stocks stored overseas to be imported and sold in the United States. ThermaCELL also requested EPA modify the language regarding the dates related to existing stocks. Finally, ThermaCELL requested that companies be given until 2020 to identify an alternative provider of allethrins because that was the Agency's projected timeframe for completing registration review.

The cancellation schedule allows almost 3 years (from March 2013 to December 2015) before formulation of allethrins end use products using the cancelled technical products would be prohibited. ThermaCELL did not explain its basis for suggesting that cancellation as of December 2015 would be insufficient to develop alternative product formulations or equipment. As for the suggested changes to the cancellation order language, both the Notice of Receipt of a Request to Voluntarily Cancel Certain Pesticide Registrations and this Product Cancellation Order provide the standard language for existing stocks used by EPA when describing cancellation actions. The existing stocks dates are well into the future, including that as of January 1, 2017, persons other than registrants (including ThermaCELL) will be allowed to sell, distribute, or use existing stocks of cancelled end use products until such stocks are exhausted. EPA does not believe it is necessary to modify the definition of, and dates for, formulation and use of existing stocks here. For these reasons, the Agency does not believe that the comments submitted during the comment period merit further review or a denial of the requests for voluntary cancellation.

IV. Cancellation Order

Pursuant to FIFRA section 6(f), EPA hereby approves the requested cancellations of the registrations identified in Table 1. and 2. of Unit II. Accordingly, the Agency orders that the product registrations identified in Table 1. and 2. of Unit II. are canceled. The effective date of the cancellations that are the subject of this notice are as follows: the cancellation for all allethrins technical products, listed in Table 1. of Unit II., will be effective September 30, 2015; no use of technical allethrins products to formulate any end use products will be permitted after December 31, 2015; and the cancellation for the allethrins end use products listed in Table 2. of Unit II. will be effective December 31, 2016. Any distribution, sale, or use of existing stocks of the products identified in Tables 1. and 2. of Unit II. in a manner inconsistent with any of the provisions for disposition of existing stocks set forth in Unit VI. will be a violation of FIFRA.

V. What is the agency's authority for taking this action?

Section 6(f)(1) of FIFRA provides that a registrant of a pesticide product may at any time request that any of its pesticide registrations be canceled or amended to terminate one or more uses. FIFRA further provides that, before acting on the request, EPA must publish a notice of receipt of any such request in the **Federal Register**. Thereafter, following the public comment period, the EPA Administrator may approve such a request. The notice of receipt for this action was published for comment in the **Federal Register** issue of December 19, 2012 (77 FR 75157) (FRL–9368–8). The comment period closed on January 17, 2013.

VI. Provisions for Disposition of Existing Stocks

Existing stocks are those stocks of registered pesticide products which are currently in the United States and which were packaged, labeled, and released for shipment prior to the effective date of the cancellation action. The registrants may continue to sell and distribute existing stocks of technical

products listed in Table 1. of Unit II. up to and including September 30, 2015, and end use products listed in Table 2. of Unit II. up to and including December 31, 2016. The following terms and conditions are applicable to existing stocks:

- No sale or distribution of allethrins technical products by any person, other than for purposes of disposal or export, will be permitted after September 30, 2015.
- No use of technical allethrins products to formulate end use products will be permitted after December 31, 2015.
- As of January 1, 2017, persons other than registrants will be allowed to sell, distribute, or use existing stocks of cancelled end use products until such stocks are exhausted. Use of existing stocks will be permitted only to the extent that the use is consistent with the terms of the previously-approved labeling accompanying the product used.

List of Subjects

Environmental protection, Pesticides and pests.

Dated: April 11, 2013.

Richard P. Keigwin Jr.,

Director, Pesticide Re-Evaluation Division, Office of Pesticide Programs.

[FR Doc. 2013–09554 Filed 4–23–13; 8:45 am]

BILLING CODE 6560–50–P

ENVIRONMENTAL PROTECTION AGENCY

EPA–HQ–OPP–2010–0014; FRL–9384–6]

Product Cancellation Order for Certain Pesticide Registrations

AGENCY: Environmental Protection Agency (EPA).

ACTION: Notice.

SUMMARY: This notice announces EPA's order for the cancellations, voluntarily requested by the registrants and accepted by the Agency, of the products listed in Table 1 of Unit II., pursuant to the Federal Insecticide, Fungicide, and Rodenticide Act (FIFRA). This cancellation order follows a September 19, 2012 **Federal Register** notice of receipt of requests from the registrants listed in Table 2 of Unit II. to voluntarily cancel these product registrations. In the September 19, 2012 notice, EPA indicated that it would issue an order implementing the cancellations, unless the Agency received substantive comments within the 180-day comment period that would merit its further review of these requests, or unless the registrants withdrew their requests. The Agency did not receive any comments on the notice. Further, the registrants did not withdraw their requests. Accordingly, EPA hereby issues in this notice a cancellation order granting the requested cancellations. Any distribution, sale, or use of the products subject to this cancellation order is permitted only in accordance with the terms of this order, including any existing stocks provisions.

DATES: The cancellations are effective April 24, 2013.

FOR FURTHER INFORMATION CONTACT: John W. Pates, Jr., Pesticide Re-Evaluation Division (7508P), Office of Pesticide Programs, Environmental Protection Agency, 1200 Pennsylvania Ave. NW., Washington, DC 20460–0001; telephone number: (703) 308–8195; email address: *pates.john@epa.gov.*

SUPPLEMENTARY INFORMATION:

I. General Information

A. Does this action apply to me?

This action is directed to the public in general, and may be of interest to a wide range of stakeholders including environmental, human health, and agricultural advocates; the chemical industry; pesticide users; and members of the public interested in the sale, distribution, or use of pesticides. Since others also may be interested, the Agency has not attempted to describe all the specific entities that may be affected by this action.

B. How can I get copies of this document and other related information?

The docket for this action, identified by docket identification (ID) number EPA–HQ–OPP–2010–0014, is available at *http://www.regulations.gov* or at the Office of Pesticide Programs Regulatory Public Docket (OPP Docket) in the Environmental Protection Agency Docket Center (EPA/DC), EPA West Bldg., Rm. 3334, 1301 Constitution Ave. NW., Washington, DC 20460–0001. The Public Reading Room is open from 8:30 a.m. to 4:30 p.m., Monday through Friday, excluding legal holidays. The telephone number for the Public Reading Room is (202) 566–1744, and the telephone number for the OPP Docket is (703) 305–5805. Please review the visitor instructions and additional information about the docket available at *http://www.epa.gov/dockets.*

II. What action is the agency taking?

This notice announces the cancellation, as requested by registrants, of 50 products registered under FIFRA section 3. These registrations are listed in sequence by registration number in Table 1 of this unit.

TABLE 1—PRODUCT CANCELLATIONS

EPA Registration No.	Product name	Chemical name
00100–00990	Demon WP Insecticide	Cypermethrin.
000264–00778	Stratego	Propiconazole; trifloxystrobin.
000432–00867	Delta GC Insecticide Granule	Deltamethrin.
000432–01240	DeltaGard GC Granular Insecticide.	Deltamethrin.
000432–01241	DeltaGard T & O Granular Insecticide	Deltamethrin.
000432–01242	DeltaGard GC Granular Insecticide	Deltamethrin.
000432–01243	DeltaGard T & O Granular Insecticide	Deltamethrin.
000432–01307	Tempo 20 WP T & O Insecticide in Water Soluble Packets (120G).	Cyfluthrin.
000432–01325	Tempo 0.02 Ornamental Insecticide	Cyfluthrin.
000432–01337	Tempo 2 Golf Course Insecticide	Cyfluthrin.
000432–01359	Tempo 2 Greenhouse and Nursery Insecticide	Cyfluthrin.
000675–00019	Bulk Amphyl Brand Disinfectant	2-Benzyl-4-chlorophenol; *o*-phenylphenol.
001043–00115	Process Vesphene II ST	4-Tert amylphenol; *o*-phenylphenol.
001448–00092	Busan 1024	3,5,7-Triaza-1-azoniatricyclo(3.3.1.1 (superscript 3,7)) decane, 1-methyl-, chloride.
002829–00090	Durotex 7603	10,10'-Oxybisphenoxarsine.
002829–00096	Vinyzene BP 5–2	10,10'-Oxybisphenoxarsine.

TABLE 1—PRODUCT CANCELLATIONS—Continued

EPA Registration No.	Product name	Chemical name
002829–00105	Vinyzene BP–5 SIL3	10,10'-Oxybisphenoxarsine.
002829–00109	Vinyzene BP–5–2MS	10,10'-Oxybisphenoxarsine.
002829–00110	Vinyzene BP 5–2 MEK	10,10'-Oxybisphenoxarsine.
002829–00115	Vinyzene SB–1	10,10'-Oxybisphenoxarsine.
002829–00120	OBPA	10,10'-Oxybisphenoxarsine.
002829–00125	Vinyzene BP–5–5 DIDP	10,10'-Oxybisphenoxarsine.
002829–00132	Vinyzene SB–2	10,10'-Oxybisphenoxarsine.
002829–00144	Vinyzene IT 4081 DIDP	10,10'-Oxybisphenoxarsine.
003377–00020	Bromine Chloride Disinfectant	Bromine chloride.
009688–00134	Chemico Insect Bait A	Sulfluramid.
009688–00199	Chemico Insect Bait SS	Sulfluramid.
009688–00209	Chemico Insect Bait REP	Sulfluramid.
010292–00020	Unitab	Phosphoric acid 1-decanaminium, *N*-decyl-*N,N*-dimethyl-, chloride.
010772–00005	Sno Bol Toilet Bowl Cleaner	Hydrochloric acid; 1-decanaminium, *N,N*-dimethyl-*N*-octyl-, chloride; alkyl*dimethyl benzyl ammonium chloride *(50%C14, 40%C12, 10%C16); 1-decanaminium, *N*-decyl-*N,N*-dimethyl-, chloride; 1-octanaminium, *N,N*-dimethyl-*N*-octyl-, chloride.
048520–00016	Poly-50 Algaecide	Poly(oxy-1,2-ethanediyl(dimethylimino)-1,2-ethanediyl(dimethylimino)-1,2-ethanediyl dichloride).
062719–00418	RH–0611	Mancozeb; myclobutanil.
062719–00584	GF 1948	Propiconazole.
066330–00337	Micro Flo Permethrin 3.2 AG	Permethrin.
066330–00376	Thifensulfuron-methyl Technical	Thifensulfuron.
074655–00027	Olin 3204	Poly(oxy-1,2-ethanediyl(dimethylimino)-1,2-ethanediyl(dimethylimino)-1,2-ethanediyl dichloride).
AL020006	Propiconazole EC	Propiconazole.
AR020003	Propiconazole EC	Propiconazole.
CA090003	Agri-Mek 0.15 EC Miticide/Insecticide	Abamectin.
FL100007	Gramoxone Inteon	Paraquat dichloride.
KY050001	Propimax EC	Propiconazole.
ME090004	Ethrel Brand Ethephon Plant Regulator	Ethephon.
MI040003	Propiconazole EC	Propiconazole.
MI110003	Gramoxone Inteon	Paraquat dichloride.
MN030003	Propiconazole EC	Propiconazole.
MS030003	Propiconazole EC	Propiconazole.
ND020003	Propiconazole EC	Propiconazole.
NV000005	WIN–FLO 4F	Pentachloronitrobenzene.
NY050002	Propimax EC	Propiconazole.
OH030003	Propiconazole EC.	Propiconazole.

*NOTE: The voluntary cancellation request published on September 19, 2012, included SLN: WA000014. However, since the product registration was cancelled in the **Federal Register** issue of February 6, 2013 (78 FR 8513) (FRL–9377–1), it is not included in the list shown in this Unit.

Table 2 of this unit includes the names and addresses of record for all registrants of the products in Table 1 of this unit, in sequence by EPA company number. This number corresponds to the first part of the EPA registration numbers of the products listed in Table 1 of this unit.

TABLE 2—REGISTRANTS OF CANCELLED PRODUCTS

EPA Company number	Company name and address
100 (CA090003; FL100007; MI110003)	Syngenta Crop Protection, LLC, 410 Swing Rd., P.O. Box 18300, Greensboro, NC 27419–8300.
264 (ME090004)	Bayer CropScience LP, 2 T.W. Alexander Dr., P.O. Box 12014, Research Triangle Park, NC 27709.
432	Bayer Environmental Science, 2 T.W. Alexander Dr., P.O. Box 12014, Research Triangle Park, NC 27709.
675	Reckitt Benckiser, LLC, 399 Interpace Parkway, Parsippany, NJ 07054–0225.
1043	Steris Corporation, P.O. Box 147, St. Louis, MO 63166–0147.
1448	Buckman Laboratories, Inc., 1256 North McLean Blvd., Memphis, TN 38108.
2829	Rohm and Haas Company, 100 Independence Mall West, Suite 1A, Philadelphia, PA 19106–2399.
3377	Albemarle Corporation, 451 Florida St., Baton Rouge, LA 70801–1765.
9688	Chemisco, P.O. Box 142642, St. Louis, MO 63114–0642.
10292	Venus Laboratories, Inc., 111 South Rohlwing Rd., Addison, IL 60101.
10772	Church & Dwight Co., Inc., 469 North Harrison St., Princeton, NJ 08543–5297.

TABLE 2—REGISTRANTS OF CANCELLED PRODUCTS—Continued

EPA Company number	Company name and address
48520	Phoenix Products Company, 5 Roger Ave., Milford, CT 06460–6436.
62719 (AL020006; AR020003; KY050001; MI040003; MN030003; MS030003; ND020003; NY050002; OH030003).	Dow AgroSciences, LLC, 9330 Zionsville Rd., Indianapolis, IN 46268–1054.
66330	Arysta Life Science North America, LLC, 15401 Weston Parkway, Suite 150, Cary, NC 27513.
74655	Hercules Incorporated, A Wholly Owned Subsidiary of Ashland, Inc., 7910 Baymeadows Way, Suite 100, Jacksonville, FL 32256.
NV000005	AMVAC Chemical Corporation, 4695 MacArthur Ct., Suite 1200, Newport Beach, CA 92660–1706.

III. Summary of Public Comments Received and Agency Response to Comments

During the public comment period provided, EPA received no comments in response to the September 19, 2012 **Federal Register** notice announcing the Agency's receipt of the requests for voluntary cancellations of products listed in Table 1 of Unit II.

IV. Cancellation Order

Pursuant to FIFRA section 6(f), EPA hereby approves the requested cancellations of the registrations identified in Table 1 of Unit II. Accordingly, the Agency hereby orders that the product registrations identified in Table 1 of Unit II. are canceled. The effective date of the cancellations that are the subject of this notice is April 24, 2013. Any distribution, sale, or use of existing stocks of the products identified in Table 1 of Unit II. in a manner inconsistent with any of the provisions for disposition of existing stocks set forth in Unit VI. will be a violation of FIFRA.

V. What is the agency's authority for taking this action?

Section 6(f)(1) of FIFRA provides that a registrant of a pesticide product may at any time request that any of its pesticide registrations be canceled or amended to terminate one or more uses. FIFRA further provides that, before acting on the request, EPA must publish a notice of receipt of any such request in the **Federal Register**. Thereafter, following the public comment period, the EPA Administrator may approve such a request. The notice of receipt for this action was published for comment in the **Federal Register** issue of September 19, 2012 (77 FR 58136) (FRL–9361–2). The comment period closed on March 18, 2013.

VI. Provisions for Disposition of Existing Stocks

Existing stocks are those stocks of registered pesticide products which are currently in the United States and which were packaged, labeled, and released for shipment prior to the effective date of the cancellation action. The existing stocks provisions for the products subject to this order are as follows.

The registrants may continue to sell and distribute existing stocks of products listed in Table 1 of Unit II. until April 24, 2014, which is 1 year after the publication of the Cancellation Order in the **Federal Register**. Thereafter, the registrants are prohibited from selling or distributing products listed in Table 1 of Unit II., except for export in accordance with FIFRA section 17, or proper disposal. Persons other than the registrants may sell, distribute, or use existing stocks of products listed in Table 1 of Unit II. until existing stocks are exhausted, provided that such sale, distribution, or use is consistent with the terms of the previously approved labeling on, or that accompanied, the canceled products.

List of Subjects

Environmental protection, Pesticides and pests.

Dated: April 9, 2013.

Richard P. Keigwin, Jr.,

Director, Pesticide Re-Evaluation Division, Office of Pesticide Programs.

[FR Doc. 2013–09553 Filed 4–23–13; 8:45 am]

BILLING CODE 6560–50–P

FEDERAL MARITIME COMMISSION

[Docket No. 13—04]

Streak Products, Inc. v. UTi, United States, Inc.; Notice of Filing of Complaint and Assignment

Notice is given that a complaint has been filed with the Federal Maritime Commission (Commission) by Streak Products, Inc. (''Streak''), hereinafter ''Complainant,'' against UTi, United States, Inc. (''UTi''), hereinafter ''Respondent.'' Complainant states that it is a Delaware Corporation and manufacturer of computer storage devices. Complainant alleges that Respondent is an FMC licensed NVOCC with its primary place of business in Long Beach, CA.

Complainant alleges that Respondent ''has overcharged it by billing amounts in excess of lawful tariff from 2003 until present,'' and therefore, has violated 46 U.S.C. 41104(2). Complainant also alleges that ''UTi engaged in an unfair or unjustly discriminatory practice in violation of 46 U.S.C. 41104(4) by charging Streak rates greater than those it charged other shippers,'' and that ''UTi violated 46 U.S.C. 40501 by failing to keep open to public inspection in its tariff system, tariffs showing all its rates, charges, classifications, rules and practices between all points or ports on its own route and on any through transportation route that has been established.''

Complainant requests that the Commission issue the following relief: ''(1) an order be entered commanding UTi to pay Streak reparations for violations of the Shipping Act, plus interest, costs, and attorneys' fees [sic] any other damages to be determined; and (2) that such other and further relief be granted as the Commission determines to be proper, fair and just in the circumstances.''

The full text of the complaint can be found in the Commission's Electronic Reading Room at *www.fmc.gov/13-04.*

This proceeding has been assigned to the Office of Administrative Law Judges. The initial decision of the presiding officer in this proceeding shall be issued by April 18, 2014 and the final decision of the Commission shall be issued by August 18, 2014.

Karen V. Gregory,

Secretary.

[FR Doc. 2013–09726 Filed 4–23–13; 8:45 am]

BILLING CODE 6730–01–P

FEDERAL MARITIME COMMISSION

Ocean Transportation Intermediary License Applicants

The Commission gives notice that the following applicants have filed an application for an Ocean Transportation Intermediary (OTI) license as a Non-Vessel-Operating Common Carrier (NVO) and/or Ocean Freight Forwarder (OFF) pursuant to section 19 of the Shipping Act of 1984 (46 U.S.C. 40101). Notice is also given of the filing of applications to amend an existing OTI license or the Qualifying Individual (QI) for a licensee.

Interested persons may contact the Office of Ocean Transportation Intermediaries, Federal Maritime Commission, Washington, DC 20573, by telephone at (202) 523–5843 or by email at *OTI@fmc.gov*.

Aduanair Cargo & Courier Corp. (NVO & OFF), 5900 NW 99th Avenue, Suite 6, Doral, FL 33178, Officers: Anamar Del Castillo, Vice President (QI), Jesus Cachazo, President, Application Type: New NVO & OFF License

Albacor Shipping (USA) Inc. dba Pearl Line (NVO & OFF), 180 Franklin Turnpike, Mahwah, NJ 07430, Officers: Robert C. Ryan, Vice President (QI), Raymond M. Greer, President, Application Type: QI Change

Crescent Air Freight, Ltd. (NVO & OFF), 145 Hook Creek Blvd., Suite C2SC, Valley Stream, NY 11581, Officers: Fauad Shariff, President (QI), Sameen Shariff, Secretary, Application Type: License Transfer to Crescent Overseas Logistics, Inc.

Empire Consolidators, Inc. (NVO & OFF), 7511 193rd Street, Fresh Meadows, NY 11366, Officer: Hsiao-Ling Chen, President (QI), Application Type: QI Change

Matus International, Inc. (NVO & OFF), 411 N. Oak Street, Inglewood, CA 90302, Officers: Anthony S. Pineda, Treasurer (QI), Allan J. Matus, President, Application Type: New NVO & OFF License

Perimeter International dba Perimeter Logistics (NVO & OFF), 2700 Story Road West, Suite 150, Irving, TX 75038, Officers: Dustin Eash, Secretary (QI), Merry L. Lamothe, President, Application Type: New NVO & OFF License

Safeway Shipping and Clearing Services, Inc. (NVO), 3615 Willowbend Blvd., Suite 414, Houston, TX 77054, Officers: Ibraheem O. Iyiola, Vice President (QI), Abiola S. Iyiola, President, Application Type: New NVO License

Dated: April 19, 2013.

By the Commission.

Karen V. Gregory,

Secretary.

[FR Doc. 2013–09725 Filed 4–23–13; 8:45 am]

BILLING CODE 6730–01–P

FEDERAL MARITIME COMMISSION

Ocean Transportation Intermediary License Reissuances

The Commission gives notice that the following Ocean Transportation Intermediary licenses have been reissued pursuant to section 19 of the Shipping Act of 1984 (46 U.S.C. 40101).

License No.: 018413F.

Name: Chicago Int'l Forwarder Incorporated.

Address: 301 Oliver Court, Westmont, IL 60559.

Date Reissued: March 24, 2013.

License No.: 018824F.

Name: Christopher Onyekwere dba Aqua Maritime Services.

Address: 3639 Campfield Court, Katy, TX 77449.

Date Reissued: March 24, 2013.

License No.: 018839F.

Name: Aliana Express, Inc.

Address: 11100 E. Artesia Blvd., Suite H, Cerritos, CA 90703.

Date Reissued: March 24, 2013.

License No.: 020337N.

Name: WTG Logistics, Inc. dba WTG International.

Address: 140 Epping Road, Exeter, NH 03833.

Date Reissued: March 27, 2013.

License No.: 020953F.

Name: Gold Cargo Freight, Corp.

Address: 8233 NW 68th Street, Miami, FL 33166.

Date Reissued: March 21, 2013.

License No.: 021073F.

Name: All Over Export, Inc. dba Caraval.

Address: 1120 SW 86th Court, Miami, FL 33144.

Date Reissued: March 28, 2013.

License No.: 021440F.

Name: Coreana Express (Sea-Tac) Inc.

Address: 6858 South 220th Street, Kent, WA 98032.

Date Reissued: March 24, 2013.

Vern W. Hill,

Director, Bureau of Certification and Licensing.

[FR Doc. 2013–09719 Filed 4–23–13; 8:45 am]

BILLING CODE 6730–01–P

FEDERAL MARITIME COMMISSION

Ocean Transportation Intermediary License Rescission of Order of Revocation

The Commission gives notice that it has rescinded its Order revoking the following license pursuant to section 19 of the Shipping Act of 1984 (46 U.S.C. 40101).

License No.: 023129N.

Name: F.L. Investment Group, Inc. dba Quivas Cargo Express.

Address: 4101 Alverado Street, Orlando, FL 32812.

Order Published: April 3, 2013 (Volume 78, No. 64, Pg. 20108).

Vern W. Hill,

Director, Bureau of Certification and Licensing.

[FR Doc. 2013–09716 Filed 4–23–13; 8:45 am]

BILLING CODE 6730–01–P

FEDERAL RESERVE SYSTEM

Formations of, Acquisitions by, and Mergers of Bank Holding Companies

The companies listed in this notice have applied to the Board for approval, pursuant to the Bank Holding Company Act of 1956 (12 U.S.C. 1841 *et seq.*) (BHC Act), Regulation Y (12 CFR part 225), and all other applicable statutes and regulations to become a bank holding company and/or to acquire the assets or the ownership of, control of, or the power to vote shares of a bank or bank holding company and all of the banks and nonbanking companies owned by the bank holding company, including the companies listed below.

The applications listed below, as well as other related filings required by the Board, are available for immediate inspection at the Federal Reserve Bank indicated. The applications will also be available for inspection at the offices of the Board of Governors. Interested persons may express their views in writing on the standards enumerated in the BHC Act (12 U.S.C. 1842(c)). If the proposal also involves the acquisition of a nonbanking company, the review also includes whether the acquisition of the nonbanking company complies with the standards in section 4 of the BHC Act (12 U.S.C. 1843). Unless otherwise noted, nonbanking activities will be conducted throughout the United States.

Unless otherwise noted, comments regarding each of these applications must be received at the Reserve Bank indicated or the offices of the Board of Governors not later than May 20, 2013.

A. Federal Reserve Bank of Kansas City (Dennis Denney, Assistant Vice

President) 1 Memorial Drive, Kansas City, Missouri 64198–0001:

1. *Goering Management Company, L.L.C. and Goering Financial Holding Company Partnership, L.P.,* both in Moundridge, Kansas; to retain at least 43 percent of the voting shares of Bon, Inc., Moundridge, Kansas, and thereby indirectly retain voting shares of Home State Bank & Trust Co., McPherson, Kansas, and The Citizens State Bank, Moundridge, Kansas.

Board of Governors of the Federal Reserve System, April 19, 2013.

Margaret McCloskey Shanks,

Deputy Secretary of the Board.

[FR Doc. 2013–09642 Filed 4–23–13; 8:45 am]

BILLING CODE 6210–01–P

FEDERAL RESERVE SYSTEM

Notice of Proposals To Engage in or To Acquire Companies Engaged in Permissible Nonbanking Activities

The companies listed in this notice have given notice under section 4 of the Bank Holding Company Act (12 U.S.C. 1843) (BHC Act) and Regulation Y, (12 CFR part 225) to engage *de novo,* or to acquire or control voting securities or assets of a company, including the companies listed below, that engages either directly or through a subsidiary or other company, in a nonbanking activity that is listed in § 225.28 of Regulation Y (12 CFR 225.28) or that the Board has determined by Order to be closely related to banking and permissible for bank holding companies. Unless otherwise noted, these activities will be conducted throughout the United States.

Each notice is available for inspection at the Federal Reserve Bank indicated. The notice also will be available for inspection at the offices of the Board of Governors. Interested persons may express their views in writing on the question whether the proposal complies with the standards of section 4 of the BHC Act.

Unless otherwise noted, comments regarding the applications must be received at the Reserve Bank indicated or the offices of the Board of Governors not later than May 9, 2013.

A. Federal Reserve Bank of San Francisco (Gerald C. Tsai, Director, Applications and Enforcement) 101 Market Street, San Francisco, California 94105–1579:

1. One PacificCoast Foundation, Oakland, California; to engage *de novo* in community development activities and nonbanking activities incidental to extending credit, pursuant to sections 225.28(b)(12)(i) and 225.28(b)(2)(i), respectively.

Board of Governors of the Federal Reserve System, April 19, 2013.

Margaret McCloskey Shanks,

Deputy Secretary of the Board.

[FR Doc. 2013–09641 Filed 4–23–13; 8:45 am]

BILLING CODE 6210–01–P

FEDERAL TRADE COMMISSION

[File No. 101 0215]

Graco, Inc.; Analysis of Agreement Containing Consent Order To Aid Public Comment

AGENCY: Federal Trade Commission.

ACTION: Proposed Consent Agreement.

SUMMARY: The consent agreement in this matter settles alleged violations of federal law prohibiting unfair or deceptive acts or practices or unfair methods of competition. The attached Analysis to Aid Public Comment describes both the allegations in the draft complaint and the terms of the consent order—embodied in the consent agreement—that would settle these allegations.

DATES: Comments must be received on or before May 20, 2013.

ADDRESSES: Interested parties may file a comment at *https://ftcpublic.commentworks.com/ftc/gracoconsent* online or on paper, by following the instructions in the Request for Comment part of the **SUPPLEMENTARY INFORMATION** section below. Write ''Graco, File No. 101 0215'' on your comment and file your comment online at *https://ftcpublic.commentworks.com/ftc/gracoconsent* by following the instructions on the web-based form. If you prefer to file your comment on paper, mail or deliver your comment to the following address: Federal Trade Commission, Office of the Secretary, Room H–113 (Annex D), 600 Pennsylvania Avenue NW., Washington, DC 20580.

FOR FURTHER INFORMATION CONTACT: Benjamin Jackson (202–326–2193), FTC, Bureau of Competition, 600 Pennsylvania Avenue NW., Washington, DC 20580.

SUPPLEMENTARY INFORMATION: Pursuant to Section 6(f) of the Federal Trade Commission Act, 15 U.S.C. 46(f), and FTC Rule 2.34, 16 CFR 2.34, notice is hereby given that the above-captioned consent agreement containing a consent order to cease and desist, having been filed with and accepted, subject to final approval, by the Commission, has been placed on the public record for a period of thirty (30) days. The following Analysis to Aid Public Comment describes the terms of the consent agreement, and the allegations in the complaint. An electronic copy of the full text of the consent agreement package can be obtained from the FTC Home Page (for April 18, 2013), on the World Wide Web, at *http://www.ftc.gov/os/actions.shtm.* A paper copy can be obtained from the FTC Public Reference Room, Room 130–H, 600 Pennsylvania Avenue NW., Washington, DC 20580, either in person or by calling (202) 326–2222.

You can file a comment online or on paper. For the Commission to consider your comment, we must receive it on or before May 20, 2013. Write ''Graco, File No. 101 0215'' on your comment. Your comment—including your name and your state—will be placed on the public record of this proceeding, including, to the extent practicable, on the public Commission Web site, at *http://www.ftc.gov/os/publiccomments.shtm.* As a matter of discretion, the Commission tries to remove individuals' home contact information from comments before placing them on the Commission Web site.

Because your comment will be made public, you are solely responsible for making sure that your comment does not include any sensitive personal information, like anyone's Social Security number, date of birth, driver's license number or other state identification number or foreign country equivalent, passport number, financial account number, or credit or debit card number. You are also solely responsible for making sure that your comment does not include any sensitive health information, like medical records or other individually identifiable health information. In addition, do not include any ''[t]rade secret or any commercial or financial information which * * * is privileged or confidential,'' as discussed in Section 6(f) of the FTC Act, 15 U.S.C. 46(f), and FTC Rule 4.10(a)(2), 16 CFR 4.10(a)(2). In particular, do not include competitively sensitive information such as costs, sales statistics, inventories, formulas, patterns, devices, manufacturing processes, or customer names.

If you want the Commission to give your comment confidential treatment, you must file it in paper form, with a request for confidential treatment, and you have to follow the procedure explained in FTC Rule 4.9(c), 16 CFR 4.9(c).[1] Your comment will be kept

[1] In particular, the written request for confidential treatment that accompanies the comment must

Continued

confidential only if the FTC General Counsel, in his or her sole discretion, grants your request in accordance with the law and the public interest.

Postal mail addressed to the Commission is subject to delay due to heightened security screening. As a result, we encourage you to submit your comments online. To make sure that the Commission considers your online comment, you must file it at *https://ftcpublic.commentworks.com/ftc/gracoconsent* by following the instructions on the web-based form. If this Notice appears at *http://www.regulations.gov/#!home,* you also may file a comment through that Web site.

If you file your comment on paper, write ''Graco, File No. 101 0215'' on your comment and on the envelope, and mail or deliver it to the following address: Federal Trade Commission, Office of the Secretary, Room H–113 (Annex D), 600 Pennsylvania Avenue NW., Washington, DC 20580. If possible, submit your paper comment to the Commission by courier or overnight service.

Visit the Commission Web site at *http://www.ftc.gov* to read this Notice and the news release describing it. The FTC Act and other laws that the Commission administers permit the collection of public comments to consider and use in this proceeding as appropriate. The Commission will consider all timely and responsive public comments that it receives on or before May 20, 2013. You can find more information, including routine uses permitted by the Privacy Act, in the Commission's privacy policy, at *http://www.ftc.gov/ftc/privacy.htm.*

Analysis of Agreement Containing Consent Order To Aid Public Comment

The Federal Trade Commission (''Commission'') has accepted for public comment an Agreement Containing Consent Order (''Consent Order'') with Graco, Inc. (''Graco'') to remedy the alleged anticompetitive effects resulting from Graco's acquisition of its most significant competitors, Gusmer Corp. (''Gusmer'') and GlasCraft, Inc. (''GlasCraft''). The Commission Complaint (''Complaint'') alleges that, at the time of the acquisitions, Graco, Gusmer, and GlasCraft each manufactured and sold equipment for the application of fast-set chemicals (''fast-set equipment''). Neither acquisition was reportable under the Hart-Scott-Rodino Act. The Consent Order seeks to restore competition lost through the acquisitions by requiring Graco to license certain technology to a small competitor to facilitate its entry and expansion, and to cease and desist from engaging in certain conduct that may delay or prevent entry and expansion of competing firms. The Complaint and Consent Order in this matter have been issued as final and the Consent Order is now effective.

The Complaint alleges that the acquisitions each violated Section 7 of the Clayton Act, as amended, 15 U.S.C. 18, and Section 5 of the Federal Trade Commission Act, as amended, 15 U.S.C. 45.

The purpose of this Analysis to Aid Public Comment is to invite and facilitate public comment concerning the Consent Order. It is not intended to constitute an official interpretation of the Agreement and Consent Order or in any way to modify their terms.

The Consent Order is for settlement purposes only. The Commission has placed the Consent Order on the public record for thirty (30) days for the receipt of comments by interested persons.

I. The Relevant Market and Market Structure

The relevant market within which to analyze the competitive effects of these acquisitions is fast-set equipment used by contractors in North America. Fast-set equipment combines and applies various reactive chemicals that form polyurethane foams or polyurea coatings used for the application of insulation and protective coatings. The essential components of a fast-set equipment system are the proportioner, the heated hoses, and the spray gun.

Fast-set equipment manufacturers sell their products almost exclusively through a network of specialized, third-party distributors. These independent distributors sell to end-users. End-users demand a proximate source of expertise, spare parts, and repair services. Therefore, a robust network of third-party fast-set equipment distributors is necessary for any manufacturer to compete effectively in the relevant market.

Prior to its acquisition by Respondent in 2005, Gusmer was the largest and most significant competitor engaged in the manufacture and sale of a full line of fast-set equipment throughout North America and the world. The acquisition increased Graco's share of the North American fast-set equipment market to over 65%, and left GlasCraft as Graco's only significant North American competitor. Graco's acquisition of GlasCraft in 2008 raised Graco's market share above 90% and removed Graco's last significant North American competitor. Following the acquisitions of each of Gusmer and GlasCraft, Graco closed both firms' fast-set equipment manufacturing facilities and has fully assimilated or terminated all remaining assets, products, intellectual property, and personnel from both firms.

Prior to the acquisitions, fast-set equipment distributors typically carried products from multiple manufacturers. Distributors and end-users were able to mix and match the products from the different manufacturers to assemble a fast-set system that best satisfied end-users' demands. Further, manufacturers did not impose exclusive relationships on distributors—a distributor was free to make some or all of its fast-set equipment purchases from whichever manufacturers it chose. The Complaint alleges, among other effects, that the acquisitions of Gusmer and GlasCraft have removed the ability of distributors and end-users to select the equipment that best serves their, and their customers', interests and needs.

II. Conditions of Entry and Expansion

The Complaint alleges high entry barriers in the relevant market. The principal barrier to entry is the need for specialized third-party distribution. As a result of its acquisitions, Graco obtained substantial control over access to that distribution channel. Subsequent Graco practices have further heightened barriers to competitive entry and expansion, such that restoration of the competition lost as a result of Graco's acquisitions is unlikely to be restored unless Graco's continuation of those practices is enjoined.

Beginning in 2007, former employees of Gusmer began distributing fast-set equipment as Gama Machinery USA, Inc., now doing business as Polyurethane Machinery Corp. (''Gama/PMC''). In March 2008, Graco sued Gama/PMC and others alleging, among other things, breach of contract. The continuation of that litigation has reduced the willingness of distributors to purchase fast-set equipment from Gama/PMC, for fear that their supply of fast-set equipment might later be interrupted as a result of litigation. To reduce that barrier, an impending settlement of that litigation is incorporated in the Commission's Consent Order.

Like Gama/PMC, other prospective competitors—some of which presently offer only some components, rather than a full line of proportioners, hoses, and spray guns—have been unable to gain a meaningful foothold in the North American fast-set equipment market

include the factual and legal basis for the request, and must identify the specific portions of the comment to be withheld from the public record. *See* FTC Rule 4.9(c), 16 CFR 4.9(c).

because of barriers to access to the required specialty distribution channel. Following its obtaining of market power through its acquisitions, Graco increased the discount and inventory thresholds it required of distributors, and threatened to cut off any distributor's access to needed Graco fast-set equipment if the distributor purchased fast-set equipment from any Graco rival. The reduction of barriers to entry and expansion by enjoining the continuation of this conduct is necessary to the restoration of competition lost as a result of Graco's acquisitions, and certain provisions of the Commission's cease and desist order are directed to that end.

III. Effects of Graco's Acquisitions

As a result of the acquisitions, Graco has eliminated head-to-head competition with Gusmer and GlasCraft. The Complaint alleges that concentration in the relevant market has increased substantially, and given Graco the ability to exercise market power unilaterally. The Complaint alleges that Graco has exercised that market power by raising prices, reducing product options and alternatives, and reducing innovation. The Complaint further alleges that Graco engaged in certain post-acquisition conduct that has raised barriers to entry and expansion such that the continuation of that conduct must be enjoined if the competition lost as a result of Graco's acquisitions is to be restored.

IV. The Consent Agreement

Since the acquisitions were completed some time ago, it is not practicable to recreate the acquired firms as independent going concerns. Instead, the purpose of the Consent Order is to ensure the restoration of the competitive conditions that existed before the acquisitions, to the extent possible, by facilitating Gama/PMC's entry and expansion and lowering barriers to entry. Therefore, the Consent Order requires Graco to enter into a settlement agreement with Gama/PMC within ten (10) days of the entry of the Order. In addition, Graco must grant to Gama/PMC an irrevocable license to certain Graco patents and other intellectual property in order to ensure that Graco cannot continue or renew its suit. In exchange, PMC will pay to Graco a sum of money for the settlement of the litigation and agree to a deferred license fee for the intellectual property. The settlement documents will be incorporated by reference into the Consent Order, and cannot be modified without the Commission's prior approval. Further, the Consent Order independently prohibits Graco from filing suit against Gama/PMC for infringing the licensed intellectual property.

In order to reduce barriers to competitor entry, the Consent Order directs Graco to cease and desist from imposing any conditions on its distributors that could, directly or indirectly, lead to exclusivity. The Consent Order also prohibits Graco from discriminating against, coercing, threatening, or in any other manner pressuring its distributors not to carry or service any competing fast-set equipment. The Consent Order does not mandate that any distributor carry competitive fast-set equipment; rather, it bars Graco from imposing exclusivity on its distributors.

The Consent Order further obligates Graco to waive or modify any policies or contracts that would violate the Consent Order. Graco will have thirty (30) days after the Consent Order is final to negotiate changes in the contracts with its distributors to comply with the Consent Order. Graco must provide all of its distributors, employees and agents with a copy of the Consent Order and a plain-language explanation of what is says and requires.

The Consent Order further requires Graco to provide the Commission with prior notice: (1) If it intends to make another acquisition of fast-set equipment (after an appropriate waiting period); or (2) if it intends, within thirty (30) days, to institute a lawsuit or similar legal action against a distributor or end-user with regard to a claimed violation of Graco's trade secrets or other intellectual property covering fast-set equipment. The Consent Order will remain in effect for ten (10) years, and contains standard compliance and reporting requirements.

V. Effective Date of the Consent Order and Opportunity for Public Comment

In this instance, the Commission issued the Complaint and the Consent Order as final, and served them upon Graco at the same time it accepted the Consent Agreement for public comment. As a result of this action, the Consent Order has become effective. The Commission adopted procedures in August 1999 to allow for immediate implementation of an order prior to the public comment period. The Commission announced that it ''contemplates doing so only in exceptional cases where, for example, it believes that the allegedly unlawful conduct to be prohibited threatens substantial and imminent public harm.'' 64 FR 46,267, 46,268 (1999).

This is an appropriate case in which to issue a final order before receiving public comment because the effectiveness of the remedy depends on the timeliness of the private settlement agreement between Graco and Gama/PMC, which only becomes effective when the Consent Order becomes final. Both Graco and Gama/PMC have made initial efforts to address distributor concerns about possible Graco retribution by separately sending letters to distributors assuring them that preliminary discussions of business relations with Gama/PMC would not have any adverse consequences on the distributors' relationship with Graco. However, the protections of the applicable license and covenants, as well as those included in the Consent Order, are needed to provide distributors reasonable assurances that buying from Gama/PMC will not jeopardize the distributors' relationship with Graco. As a result, any delay in the effectiveness of the Consent Order and the associated private settlement will prevent Gama/PMC from finalizing relationships with distributors in time for the current construction season—and this will have a significant and meaningful impact on competition in the fast-set equipment market that the Consent Order is intended to foster.

The Commission anticipates that the competitive problems alleged in the Complaint will be remedied by the Consent Order, as issued. Nonetheless, public comments are encouraged and will be considered by the Commission. The purpose of this analysis is to invite and facilitate such comments concerning the Consent Order and to aid the Commission in determining whether to modify the Consent Order in any respect. Therefore, the Complaint and Consent Order have been placed on the public record for thirty (30) days to solicit comments from interested persons. Comments received during this period will become part of the public record. After thirty (30) days, the Commission will again review the comments received, and may determine that the Consent Order should be modified in response to the comments.[2]

[2] If the Respondent does not agree to any such modifications, the Commission may (1) initiate a proceeding to reopen and modify the Consent Order in accordance with Rule 3.72(b), 16 CFR 3.72(b), or (2) commence a new administrative proceeding by issuing an administrative complaint in accordance with Rule 3.11. *See* 16 CFR 2.34(e)(2).

By direction of the Commission.

Donald S. Clark,

Secretary.

Statement of the Federal Trade Commission

Today the Commission has voted unanimously to approve the Complaint and Decision & Order (''Order'') against Graco, Inc. (''Graco'') to resolve allegations that it violated Section 7 of the Clayton Act when it acquired Gusmer Corp. (''Gusmer'') in 2005 and Glascraft, Inc. (''Glascraft'') in 2008. At the time of the acquisitions, Gusmer and Glascraft were Graco's two closest competitors in the market for fast-set equipment (''FSE'') used to apply polyurethane and polyurea coatings. The acquisitions eliminated the only significant competition in the market, and resulted in Graco holding a monopoly position as the only full-line FSE manufacturer. The Order contains provisions, including prohibitions on discriminating against distributors selling competitors' FSE products, that are intended to constrain Graco's ability to exclude prospective entrants into the FSE market by establishing and/or maintaining exclusive relationships with its third-party distributors. Commissioner Wright voted in favor of the Complaint and Order, but also issued a statement outlining his disagreement with these portions of the Order. We respectfully disagree with Commissioner Wright, and believe that these specific provisions are necessary to remediate the anticompetitive impact of the two mergers in this case.

The typical remedy for the Commission in a Section 7 matter is a divestiture of the illegally acquired assets (and any other assets necessary to make the divestiture buyer a viable competitor). Pursuing such a remedy in this matter, however, would be difficult, if not impossible, because Graco had long ago integrated or discontinued the product lines it acquired from Gusmer and Glascraft. There was no easily severable package of assets that could be divested to recreate one—much less two—viable competitors to replace Gusmer and Glascraft. As a result, the most effective relief available was a behavioral remedy intended to facilitate entry into the FSE market, which, of course, includes addressing the post-acquisition conduct described in the Complaint that had precluded entry into the relevant market. Specifically, after the acquisitions Graco solidified its market share by locking up third-party distributors through a series of purchase and inventory threshold requirements, as well as threats of retaliation and termination if distributors carried the products of any remaining or newly entering FSE manufacturers.

The evidence gathered in the course of the Commission's investigation demonstrates that Graco's efforts were successful; no other firm gained more than five percent of the North American FSE market and Graco's market share of between 90 and 95 percent has remained intact since its 2008 acquisition of Glascraft. Further, the investigation uncovered no evidence that Graco's post-acquisition conduct provided any cognizable efficiency that would benefit consumers. A remedy that does not address Graco's ability to raise and maintain nearly insurmountable entry barriers is substantially less likely to return competition to the FSE market. The Order provisions that Commissioner Wright criticizes, in our view, are integral to achieving that goal but will not cause market inefficiencies.

We believe that exclusive dealing relationships can have procompetitive benefits and that such relationships should not be condemned in the absence of a thorough factual and economic assessment of the circumstances surrounding such conduct. But it is equally important to recognize that, when employed by a competitor that has acquired significant market power or monopoly power, exclusive dealing arrangements have the potential to cement such power and prevent or deter entry that would lead to lower prices, higher quality, and better service for consumers.[3] In any event, regardless of how one views exclusive dealing arrangements generally, there is ample support for the fencing-in relief prescribed in this merger settlement, which is designed to restore competition in the FSE market lost as a result of Graco's illegal acquisitions.

We join Commissioner Wright in commending the Commission staff for their hard work in this matter. They have done an excellent job in investigating the market involved and the issues raised during the course of this investigation.

By direction of the Commission, Commissioner Wright abstaining.

Donald S. Clark,

Secretary.

[3] *See, e.g., United States* v. *Microsoft Corp.,* 253 F.3d 34, 71–72, 74 (D.C. Cir. 2001) (holding that Microsoft's exclusive dealing arrangements with Internet access providers, independent software vendors, and Apple violated Sherman Act § 2).

Statement of Commissioner Joshua D. Wright

The Commission has voted to issue a Complaint and Order against Graco, Inc. (''Graco'') to remedy the allegedly anticompetitive effects of Graco's acquisition of Gusmer Corp. (''Gusmer'') in 2005 and GlasCraft, Inc. (''GlasCraft'') in 2008. I supported the Commission's decision because there is reason to believe Graco's acquisitions substantially lessened competition in the market for fast-set equipment in violation of Section 7 of the Clayton Act. I want to commend staff for their hard work in this matter. Staff has conducted a thorough investigation and developed strong evidence that Graco's acquisition of Gusmer and GlasCraft likely resulted in higher prices and fewer choices for consumers.

I write separately to discuss two aspects of the Order with which I respectfully disagree, namely the provisions prohibiting Graco from entering into exclusive dealing contracts with distributors and establishing purchase and inventory thresholds that must be satisfied in order for distributors to obtain discounts. Both provisions are aimed at prohibiting exclusivity or, in the case of purchase and inventory thresholds, loyalty discounts that might be viewed as *de facto* exclusive arrangements. I am not persuaded in this case that prohibiting exclusive dealing contracts and regulating loyalty discounts will make consumers better off. To the contrary, these provisions may lead to reduced output or higher prices for consumers. I therefore do not believe the limitations on such arrangements imposed by the Order are in the public interest.

I. Appropriate Use of Behavioral Remedies

The majority and I agree that although the most suitable remedy for an anticompetitive merger usually is a divestiture of assets, under certain circumstances behavioral remedies may be appropriate.[4] One scenario in which behavioral remedies may be appropriate is when the challenged merger has long since been consummated and divestiture or other structural remedies are not a viable option for restoring competition to pre-merger levels. Given that Graco has fully integrated Gusmer and Glascraft and discontinued their

[4] *See e.g.,* Fed. Trade Comm'n, Statement of Federal Trade Commission's Bureau of Competition on Negotiating Merger Remedies, at 5 (2012), *available at http://www.ftc.gov/bc/bestpractices/merger-remediesstmt.pdf* (stating the Commission favors structural relief, such as divestitures, in horizontal mergers, but that behavioral relief may be appropriate in some cases).

product lines, divestiture is not an option and the Commission should rightly consider whether behavioral remedies in this case would protect consumers.

As with merger remedies generally, when deciding whether and what behavioral remedy to impose, the Commission must ultimately be guided by its mission of protecting consumers.[5] Because behavioral remedies displace normal competitive decision-making in a market, they pose a particularly high risk of inadvertently reducing consumer welfare and should be examined closely prior to adoption to ensure consumers' interests are best served. In particular, effective behavioral remedies must be ''tailored as precisely as possible to the competitive harms associated with the merger to avoid unnecessary entanglements with the competitive process.'' [6] Merely showing high market shares and the unavailability of structural remedies does not justify restricting conduct that typically is procompetitive because these conditions do not make the conduct any more likely, much less generally likely, to be anticompetitive.[7] A minimum safeguard to ensure remedial provisions—whether described as fencing-in relief or otherwise—restore competition rather than inadvertently reduce it is to require evidence that the type of conduct being restricted has been, or is likely to be, used anticompetitively to harm consumers.

With this analytical framework in mind, I support those remedies in the Order that seek to restore pre-merger competition by imposing restrictions closely linked to the evidence of anticompetitive harm in this case. For instance, staff uncovered evidence Graco threatened distributors that considered carrying fast-set equipment sold by competing manufacturers, and that these threats actually led to distributors not purchasing the competing products. Staff also learned that distributors refused to purchase fast-set equipment from Gama/PMC, one of the few fringe competitors remaining after Graco's acquisitions, because of the uncertainty resulting from Graco's lawsuit against Gama/PMC. The Order thus appropriately prohibits Graco from retaliating against distributors that consider purchasing fast-set equipment from other manufacturers [8] and requires Graco to settle its lawsuit against Gama/PMC.

In contrast, and as is discussed in more detail below, there is insufficient evidence linking the remedial provisions in the Order prohibiting exclusive dealing contracts and regulating loyalty discounts to the anticompetitive harm in this case.

II. Prohibitions on Exclusive Dealing

It is widely accepted that exclusive dealing and *de facto* exclusive contracts—while generally efficiency enhancing—can lead to anticompetitive results when certain conditions are satisfied. The primary competitive concern is that exclusive dealing may be used by a monopolist to raise rivals' costs of distribution by depriving them the opportunity to compete for distribution sufficient to achieve efficient scale, and ultimately harm consumers by putting competitors out of business.[9] On the other hand, the economic literature is replete with procompetitive justifications for exclusive dealing, including aligning the incentives of manufacturers and distributors, preventing free-riding, and facilitating relationship-specific investments.[10] In fact, the empirical evidence substantially supports the view that exclusive dealing arrangements are much more likely to be procompetitive than anticompetitive.[11]

Because exclusive dealing contracts typically are procompetitive and a part of the normal competitive process, the Commission should only restrict the use of such arrangements when there is sufficient evidence that they have or are likely to decrease consumer welfare. This ensures consumers the merger remedy does not deprive them the fruits of the competitive process. The evidence in this case is insufficient to conclude that Graco has used, or intends to use, exclusive dealing or *de facto* exclusive contracts to foreclose rivals and ultimately harm consumers. To the contrary, the Commission's Complaint describes the fast-set equipment market as one particularly well suited for exclusive arrangements. Specifically, the Complaint acknowledges the sale of fast-set equipment demands specialized third party distributors that possess the technical expertise to teach consumers how to use and maintain the manufacturer's equipment.[12] One could therefore easily imagine that manufacturers might only be willing to provide training to distributors if they have some assurance that current or future competitors will be unable to free ride on their investments in the distributors' technical expertise. Exclusive dealing arrangements with distributors are one well-known and common method of preventing such free riding.

The provisions in the Order prohibiting exclusive contracts therefore may needlessly harm consumers by deterring potentially procompetitive arrangements. For that reason, I do not believe that provision is in the public interest.

III. Restrictions on Loyalty Discounts

The primary anticompetitive concerns with loyalty discounts are analytically similar to those associated with exclusive dealing and *de facto* exclusive

[5] The Commission should keep in mind that ours is not a binary choice simply between imposing a structural or a behavioral remedy. The most attractive option from a consumer welfare point of view for any given circumstance may be to block the merger in its entirety, allow the merger to proceed without any remedy, or a hybrid solution combining some aspects of each of these options. Having ruled out structural remedies in this case, the question is which, if any, of the non-structural alternatives best improves consumer welfare. *See* Ken Heyer, *Optimal Remedies for Anticompetitive Mergers,* 26 ANTITRUST 27 (2012) (arguing behavioral remedies are not justified simply because structural remedies are unavailable, and that an agency should weigh the economic costs and benefits of each non-structural alternative, including doing nothing).

[6] U.S. Dep't of Justice Antitrust Div., Antitrust Division Policy Guide to Merger Remedies, at 7 n.12 (June 2011), *available at http://www.justice.gov/atr/public/guidelines/272350.pdf; see also,* Heyer, *supra* note 2, at 27–28 (''[A]mong the most important considerations in devising a behavioral remedy is that there be a close nexus between the remedy imposed and the theory of harm motivating its use.'').

[7] In fact, efficiencies justifications for exclusive dealing contracts apply, and some even more strongly, when a firm has market power.

[8] Such retaliatory conduct alone is outside the normal competitive process and has no plausible procompetitive benefit. Its proscription therefore is unlikely to harm consumers. Of course, a decision by Graco to refuse to sell to distributors who do not enter into an exclusive contract should not itself be proscribed as illegitimate retaliation.

[9] *See e.g.,* Alden F. Abbott & Joshua D. Wright, *Antitrust Analysis of Tying Arrangements and Exclusive Dealing, in* ANTITRUST LAW AND ECONOMICS 183, 194–96 (Keith N. Hylton ed., 2d ed. 2010). There also are novel theories of anticompetitive harm, including models exploring the possibility that certain types of discount programs effectively impose a tax upon distributors' choice to expand rivals' sales and thereby potentially prevent rivals from acquiring a sufficient number of retailers to cover the fixed costs of entry. *See e.g.,* Joe Farrell, et al., *Economics at the FTC: Mergers, Dominant-Firm Conduct, and Consumer Behavior,* 37 (4) REV. INDUS. ORG. 263 (2010).

[10] *See e.g.,* Abbott & Wright, *supra* note 6, at 200–01; Francine Lafontaine & Margaret Slade, *Exclusive Contracts and Vertical Restraints: Empirical Evidence and Public Policy, in* HANDBOOK OF ANTITRUST ECONOMICS, 393–94 (Paolo Buccirossi, ed., 2008); Benjamin Klein & Kevin Murphy, *Exclusive Dealing Intensifies Competition for Distribution,* 75 ANTITRUST L. J. 433, 465 (2008).

[11] *See e.g.,* Abbott & Wright, *supra* note 6, at 200–01; Lafontaine & Slade, *supra* note 7, at 393–94.

[12] Complaint ¶ 24, Graco, Inc., FTC File No.101–0215, (April 17, 2013).

contracts.[13] As with exclusive dealing, the economic literature also supports the view that loyalty discounts more often than not are procompetitive.[14] The Commission's competition mission therefore is best served by an approach that counsels against imposing restrictions on loyalty discounts unless there is sufficient evidence to establish that such arrangements have or are likely to harm competition and consumers.

The Order permits Graco to enter into certain loyalty discount agreements that require distributors to meet annual purchase and inventory thresholds to qualify for discounted prices.[15] The Order, however, restricts the scope of these loyalty discounts by prescribing the maximum threshold levels Graco may set in 2013 and by only allowing those maximums to increase by 5 percent year to year. Although there is evidence that Graco in some instances increased the inventory and purchase thresholds it required distributors to meet to receive discounts on fast-set equipment following its acquisitions, I have not seen evidence sufficient to link these increases to the anticompetitive effects of the mergers alleged in the Commission's Complaint. For example, I have seen no evidence that a distributor dropped Gama/PMC or any other fringe competitor in response to Graco's increased thresholds. Further, although there appears to be evidence that at least some distributors are unable to both meet the thresholds necessary to receive Graco's discounts and carry competing manufacturers' products, there is nothing barring these distributors from forgoing those discounts in order to carry multiple products lines. It has been several years since Graco increased the thresholds. In the absence of evidence this change harmed competition, the fact that some distributors prefer to take the discounts is not a sufficient reason to believe that prohibiting these contracts will protect consumers. Moreover, it is unlikely that the Commission is best positioned to gauge what the appropriate threshold should be for each distributor over time and as market conditions change.

As a result, based upon the available evidence, I am concerned the restrictions on loyalty discounts in the Order ultimately may reduce consumer welfare rather than protect competition. Thus, I do not believe this aspect of the Order is in the public interest.

* * * * *

For these reasons, I voted in favor of the Commission's Complaint and Order, but respectfully disagree with the Order provisions prohibiting exclusive contracts and restricting loyalty discounts. To the extent the majority believes Graco may use such arrangements to engage in anticompetitive conduct in the future, the Commission's willingness and ability to bring a monopolization claim where the evidence indicates it is appropriate would protect consumers against the competitive risks posed by these arrangements without depriving consumers of their potential benefits.

[FR Doc. 2013–09673 Filed 4–23–13; 8:45 am]

BILLING CODE 6750–01–P

[13] *See generally* Bruce H. Kobayashi, *The Economics of Loyalty Discount and Antitrust Law in the United States,* 1 Comp. Pol'y Int'l 115 (2005).

[14] *Id.*

[15] Decision & Order § III(6)(c), Graco, Inc., FTC File No.101–0215, (April 17, 2013).

GENERAL SERVICES ADMINISTRATION

[OMB Control No. 3090–00xx; Docket 2013–0001; Sequence 5]

Agency Information Collection Activities; Information Collection; USA Spending

AGENCY: Interagency Policy and Management Division, Office of Governmentwide Policy, U.S. General Services Administration (GSA).

ACTION: Notice of request for public comments regarding a new OMB clearance.

SUMMARY: Under the provisions of the Paperwork Reduction Act, the General Services Administration will be submitting to the Office of Management and Budget (OMB) a request to review and approve a new information collection requirement regarding USA Spending.

DATES: Submit comments on or before June 24, 2013.

ADDRESSES: Submit comments identified by Information Collection 3090–00xx, USA Spending, by any of the following methods:

- *Regulations.gov: http://www.regulations.gov.* Submit comments via the Federal eRulemaking portal by searching the OMB control number. Select the link ''Submit a Comment'' that corresponds with ''Information Collection 3090–00xx, USA Spending.'' Follow the instructions provided at the ''Submit a Comment'' screen. Please include your name, company name (if any), and ''Information Collection 3090–00xx, USA Spending'' on your attached document.
- *Fax:* 202–501–4067.
- *Mail:* General Services Administration, Regulatory Secretariat (MVCB), 1275 First Street NE., Washington, DC 20417. ATTN: Hada Flowers/IC 3090–00xx, USA Spending.

Instructions: Please submit comments only and cite Information Collection 3090–00xx, USA Spending, in all correspondence related to this collection. All comments received will be posted without change to *http://www.regulations.gov*, including any personal and/or business confidential information provided.

FOR FURTHER INFORMATION CONTACT: Mary Searcy, Acquisition Systems for Award Management Division, Office of Governmentwide Policy, General Services Administration, 1275 First Street NE., Washington, DC 20417; telephone number: 703–603–8132; or email address *Mary.Searcy@gsa.gov*.

SUPPLEMENTARY INFORMATION:

A. Purpose

USASpending.gov is required by the Federal Funding Accountability and Transparency Act (Transparency Act). The site provides the public with information about how tax dollars are spent. The site provides data about the various types of contracts, grants, loans and other types of spending in the federal government.

B. Annual Reporting Burden

Number of Respondents: 5,000.

Responses per Respondent: 1.

Total Responses: 5,000.

Average Burden Hours per Response: .25.

Total Burden Hours: 1250.

Obtaining Copies of Proposals: Requesters may obtain a copy of the information collection documents from the General Services Administration, Regulatory Secretariat (MVCB), 1275 First Street NE., Washington, DC 20417, telephone (202) 501–4755. Please cite OMB Control Number 3090–00xx, USA Spending, in all correspondence.

Dated: April 17, 2013.

Casey Coleman,

Chief Information Officer.

[FR Doc. 2013–09573 Filed 4–23–13; 8:45 am]

BILLING CODE 6820–WY–P

DEPARTMENT OF HEALTH AND HUMAN SERVICES

Centers for Disease Control and Prevention

[CDC–2013–0005; NIOSH–263]

Request for Information About Diethanolamine (CAS No. 111–42–2)

AGENCY: National Institute for Occupational Safety and Health (NIOSH) of the Centers for Disease Control and Prevention (CDC), Department of Health and Human Services (HHS).

ACTION: Request for information.

SUMMARY: The National Institute for Occupational Safety and Health (NIOSH) of the Centers for Disease Control and Prevention (CDC) intends to evaluate the scientific data on diethanolamine, and develop appropriate communication documents, such as a Criteria Document, which will convey the potential health risks, recommended measures for safe handling, and establish an updated Recommended Exposure Limit (REL). The current NIOSH REL for diethanolamine is 3 parts per million (ppm) as a time-weighted average (TWA) concentration for up to a 10-hr work shift during a 40-hr workweek.

NIOSH is requesting information on the following: (1) Published and unpublished reports and findings from *in vitro* and *in vivo* toxicity studies with diethanolamine; (2) information on possible health effects observed in workers exposed to diethanolamine, including exposure data and the method(s) used for sampling and analyzing exposures; (3) description of work tasks and scenarios with a potential for exposure to diethanolamine; (4) information on control measures (e.g. engineering controls, work practices, personal protective equipment, exposure data before and after implementation of control measures) that are being used in workplaces with potential exposure to diethanolamine; and (5) surveillance findings including protocol, methods, and results.

Public Comment Period: Comments must be received by June 24, 2013.

ADDRESSES: You may submit comments, identified by CDC–2013–0005 and Docket Number NIOSH–263, by either of the two following methods:

- *Federal eRulemaking Portal: http://www.regulations.gov.* Follow the instructions for submitting comments.
- Mail: NIOSH Docket Office, Robert A. Taft Laboratories, MS–C34, 4676 Columbia Parkway, Cincinnati, OH 45226.

Instructions: All information received in response to this notice must include the agency name and docket number (CDC–2013–0005; NIOSH–263). All relevant comments received will be posted without change to *http://www.regulations.gov,* including any personal information provided. All electronic comments should be formatted as Microsoft Word. Please make reference to CDC–2013–0005 and Docket Number NIOSH–263.

FOR FURTHER INFORMATION CONTACT: Jennifer Reynolds, MPH, NIOSH, Robert A Taft Laboratories, MS–C32, 4676 Columbia Parkway, Cincinnati, OH 45226, telephone (513) 533–8531.

SUPPLEMENTARY INFORMATION: Diethanolamine is a highly reactive compound. It decomposes on burning producing toxic fumes. Diethanolamine reacts violently with oxidants and strong acids. Diethanolamine is used to produce surface active agents widely used in soaps, cosmetics and personal care items. It also has other uses including as an absorbent in gas purification, as a dispersing agent in agricultural chemicals, a corrosion inhibitor and wetting agent in metalworking fluids.

The annual production of diethanolamine in the United States was estimated in 1995 to be 106,000 tons (Technology Planning and Management Corp, 2002). NIOSH estimates from the National Occupational Exposure Survey (NIOSH 1989) that the number of workers potentially exposed to diethanolamine is approximately 830,000/year.

Significant occupational exposures to diethanolamine are through the skin (dermal) and via inhalation (lung) during the use of lubricating liquids in various processes in machine building. Chronic exposure to diethanolamine can cause skin sensitization. Diethanolamine is also corrosive to the eyes. The current REL for diethanolamine is 3 ppm as a TWA concentration for up to a 10-hr work shift during a 40-hr workweek. The NIOSH REL was established as a result of testimony submitted to the Occupational Safety and Health Administration (OSHA) on their proposed rulemaking of Air Contaminants in 1988. Currently, concentrations below the REL can be detected and quantified. As part of an effort to identify RELs that may not be adequate to protect workers from adverse health effects due to exposure, NIOSH is reexamining the REL for diethanolamine. There is no OSHA permissible exposure limit (PEL) for diethanolamine. The American Conference of Governmental Hygienists (ACGIH®) threshold limit value (TLV®)—TWA for diethanolamine is 1 mg/m^3 (inhalable fraction and vapor), with a Skin notation (indicating danger of cutaneous absorption), and an A3 carcinogenicity classification (confirmed animal carcinogen with unknown relevance to humans).

NIOSH seeks to obtain materials, including published and unpublished reports and research findings, to evaluate the possible health risks of occupational exposure to diethanolamine. Examples of requested information include, but are not limited to, the following:

(1) Identification of industries or occupations in which exposures to diethanolamine may occur.

(2) Trends in the production and use of diethanolamine.

(3) Description of work tasks and scenarios with a potential for exposure to diethanolamine.

(4) Workplace exposure measurement data of diethanolamine in various types of industries and jobs.

(5) Case reports or other health information demonstrating potential health effects in workers exposed to diethanolamine.

(6) Research findings from *in vitro* and *in vivo* studies.

(7) Information on control measures (e.g., engineering controls, work practices, PPE) being taken to minimize worker exposure to diethanolamine.

(8) Educational materials for worker safety and training on the safe handling of diethanolamine.

(9) Data pertaining to the feasibility of establishing a more protective REL for diethanolamine.

(10) Names of substitute chemicals or processes being used in place of diethanolamine and type of work tasks.

References

NIOSH [1989]. National occupational exposure survey analysis of management interview responses. Vol. III. Pedersen DH, Sieber WK, eds. Cincinnati, OH: U.S. Department of Health and Human Services, Centers for Disease Control, National Institute for Occupational Safety and Health, DHHS (NIOSH) Publication No. *89–103.*

Technology Planning and Management Corporation [2002]. *Report on carcinogens background document for diethanolamine.* Prepared for the U.S. Department of Health and Human Services, National Toxicology Program: Research Triangle Park, NC.

Dated: April 18, 2013.

John Howard,

Director, National Institute for Occupational Safety and Health, Centers for Disease Control and Prevention.

[FR Doc. 2013–09651 Filed 4–23–13; 8:45 am]

BILLING CODE 4163–19–P

DEPARTMENT OF HEALTH AND HUMAN SERVICES

Administration for Children and Families

[CFDA Number: 93.676]

Announcement of the Award of 12 Single-Source Program Expansion Supplement Grants to Unaccompanied Alien Children's Shelter Care Grantees

AGENCY: Office of Refugee Resettlement, Administration for Children and Families, Department of Health and Human Services.

ACTION: Announcement of the award of 12 single-source program expansion grants to 10 current grantees to expand bed capacity and supportive services to the increasing number of unaccompanied alien children.

SUMMARY: The Administration for Children and Families (ACF), Office of Refugee Resettlement (ORR) announces the award of twelve single-source program expansion supplement grants to the following ten current grantees, for a total of $33,653,092.

Organization	Location	Amount
Children's Center, Inc	Galveston, TX	$354,377
BCFS Health and Human Services	San Antonio, TX	11,826,867
Heartland Human Care Services, Inc	Chicago, IL	1,459,119
Southwest Key, Inc	Austin, TX	12,450,000
United States Conference of Catholic Bishops	Washington, DC	300,000
Lutheran Immigration Refugee Services	Baltimore, MD	2,500,000
Lutheran Social Services of the South	Austin, TX	2,171,142
His House	Opa Locka, FL	950,000
Lincoln Hall	Lincolndale, NY	523,520
Youth For Tomorrow	Bristow, VA	1,118,067

These supplement grants will support the expansion of bed capacity and supportive services to meet the number of unaccompanied alien children referrals from the Department of Homeland Security (DHS). The funding program is mandated by section 462 of the Homeland Security Act to ensure appropriate placement of all referrals from the DHS. The program is tied to DHS apprehension strategies and sporadic number of border crossers. Award funds will support services to unaccompanied alien children through September 30, 2013.

DATES: The period of support under these supplements is October 1, 2012 through September 30, 2013.

FOR FURTHER INFORMATION CONTACT: Jallyn Sualog, Acting Director, Division of Children's Services, Office of Refugee Resettlement, 901 D Street SW., Washington, Telephone (202) 401–4997. Email:*jallyn.sualog@acf.hhs.gov*.

SUPPLEMENTARY INFORMATION: Since the beginning of FY 13, the Unaccompanied Alien Children (UAC) program has seen a dramatic increase in the number of DHS referrals. The influx of border crossers referred by DHS has grown beyond anticipated rates and has resulted in the program needing a significant increase in the number of shelter beds and supportive services.

The UAC program has specific requirements for the provision of services to unaccompanied alien children. These grantee organizations are the only entities with the infrastructure, licensing, experience, and appropriate level of trained staff to meet the required service requirements and the urgent need for the expansion of services required to respond to unexpected arrivals of unaccompanied children. The program expansion supplement will support such services and alleviate the buildup of children waiting in border patrol stations for placement in shelter care.

Statutory Authority: Section 462 of the Homeland Security Act, (6 U.S.C. 279) and sections 235(c) and 235(d) of the William Wilberforce Trafficking Victims Protection Reauthorization Act of 2008, (8 U.S.C. 1232(c) and 1232(d)).

Eskinder Negash,

Director, Office of Refugee Resettlement.

[FR Doc. 2013–09699 Filed 4–23–13; 8:45 am]

BILLING CODE 4184–45–P

DEPARTMENT OF HEALTH AND HUMAN SERVICES

Food and Drug Administration

[Docket No. FDA–2013–N–0403]

Agency Information Collection Activities; Proposed Collection; Comment Request; Protection of Human Subjects: Informed Consent; Institutional Review Boards

AGENCY: Food and Drug Administration, HHS.

ACTION: Notice.

SUMMARY: The Food and Drug Administration (FDA) is announcing an opportunity for public comment on the proposed collection of certain information by the Agency. Under the Paperwork Reduction Act of 1995 (the PRA), Federal Agencies are required to publish notice in the **Federal Register** concerning each proposed collection of information and to allow 60 days for public comment in response to the notice. This notice solicits comments on the regulations that provide protection for human subjects of clinical investigations conducted in support of applications or submissions to FDA for FDA-regulated products. The regulations provide protection of the rights, safety, and welfare of human subjects involved in research activities within FDA's jurisdiction.

DATES: Submit either electronic or written comments on the collection of information by June 24, 2013.

ADDRESSES: Submit electronic comments on the collection of information to *http://www.regulations.gov*. Submit written comments on the collection of information to the Division of Dockets Management (HFA–305), Food and Drug Administration, 5630 Fishers Lane, rm. 1061, Rockville, MD 20852. All comments should be identified with the docket number found in brackets in the heading of this document.

FOR FURTHER INFORMATION CONTACT: Ila S. Mizrachi, Office of Information Management, Food and Drug Administration, 1350 Piccard Dr., PI50–400B, Rockville, MD 20850, 301–796–7726, *Ila.mizrachi@fda.hhs.gov.*

SUPPLEMENTARY INFORMATION: Under the PRA (44 U.S.C. 3501–3520), Federal Agencies must obtain approval from the Office of Management and Budget (OMB) for each collection of information they conduct or sponsor. ''Collection of information'' is defined in 44 U.S.C. 3502(3) and 5 CFR 1320.3(c) and includes Agency requests or requirements that members of the public submit reports, keep records, or provide information to a third party. Section 3506(c)(2)(A) of the PRA (44 U.S.C. 3506(c)(2)(A)) requires Federal Agencies to provide a 60-day notice in the **Federal Register** concerning each proposed collection of information of an existing collection of information before submitting the collection to OMB for approval. To comply with this requirement, FDA is publishing notice of the proposed collection of information set forth in this document.

With respect to the following collection of information, FDA invites comments on these topics: (1) Whether the proposed collection of information is necessary for the proper performance of FDA's functions, including whether the information will have practical utility; (2) the accuracy of FDA's estimate of the burden of the proposed collection of information, including the validity of the methodology and assumptions used; (3) ways to enhance the quality, utility, and clarity of the information to be collected; and (4) ways to minimize the burden of the collection of information on respondents, including through the use of automated collection techniques, when appropriate, and other forms of information technology.

Protection of Human Subjects; Informed Consent; Institutional Review Boards—21 CFR Parts 50 and 56 (OMB Control Number 0910—NEW)

Part 50 (21 CFR part 50) applies to all clinical investigations regulated by FDA under sections 505(i) and 520(g) of the Federal Food, Drug, and Cosmetic Act (the FD&C Act) (21 U.S.C. 355(i) and 360j(g), respectively), as well as clinical investigations that support applications for research or marketing permits for products regulated by FDA, including foods and dietary supplements that bear a nutrient content claim or a health claim, infant formulas, food and color additives, drugs for human use, medical devices for human use, biological products for human use, and electronic products. Compliance with part 50 is intended to protect the rights and safety of subjects involved in investigations filed with the FDA under sections 403, 406, 409, 412, 413, 502, 503, 505, 510, 513–516, 518–520, 721, and 801 of the FD&C Act (21 U.S.C. 343, 346, 348, 350a, 350b, 352, 353, 355, 360, 360c–360f, 360h–360j, 379e, and 381, respectively) and sections 351 and 354–360F of the Public Health Service Act.

With few exceptions, no investigator may involve a human being as a subject in FDA-regulated research unless the investigator has obtained the legally effective informed consent of the subject or the subject's legally authorized representative (see 21 CFR 50.20). In seeking informed consent, each subject must be provided with certain elements of informed consent. Those elements are listed in § 50.25. Informed consent shall be documented in writing as described in § 50.27.

An institutional review board (IRB) may approve emergency research without requiring the informed consent of all research subjects provided the IRB finds and documents that certain criteria are met as required in § 50.24. We estimate that about five times per year an IRB is requested to review emergency research under § 50.24. We estimate, of the five yearly requests for IRB review under § 50.24, a particular IRB will take about an hour during each of three separate fully convened IRB meetings to review the request under § 50.24 (one meeting occurring after community consultation). The total annual reporting burden for IRB review of emergency research under § 50.24 is estimated at 15 hours (see table 1).

The information requested in the regulations for exception from the general requirements for informed consent for medical devices (21 CFR 812.47), and the information requested in the regulations for exception from the general requirements of informed consent in § 50.23, paragraphs (a) through (c), and (e), is currently approved under OMB control number 0910–0586. The information requested in the investigational new drug (IND) regulations concerning exception from informed consent for emergency research under § 50.24 is currently approved under OMB control number 0910–0014. In addition, the information requested in the regulations for IND safety reporting requirements for human drug and biological products and safety reporting requirements for bioavailability and bioequivalence studies in humans (21 CFR 320.31(d) and 312.32(c)(1)(ii) and (iv)) is currently approved under OMB control number 0910–0672.

Some clinical investigations involving children, although otherwise not approvable, may present an opportunity to understand, prevent, or alleviate a serious problem affecting the health or welfare of children (see § 50.54). Certain clinical investigations involving children may proceed if the IRB finds and documents that the clinical investigation presents a reasonable opportunity to further the understanding, prevention, or alleviation of a serious problem affecting the health or welfare of children and when the Commissioner of Food and Drugs, after consultation with a panel of experts in pertinent disciplines and following opportunity for public review and comment, makes a determination that certain conditions are met (see § 50.54(b)).

The information requested for clinical investigations in children of FDA-regulated products is covered by the collections of information in the IND regulations (part 312 (21 CFR part 312), the investigational device exemption (IDE) regulations (part 812 (21 CFR part 812), the IRB regulations (21 CFR 56.115), the food additive petition and nutrient content claim petition regulations (21 CFR 101.69 and 101.70), and the infant formula regulations (parts 106 and 107 (21 CFR parts 106 and 107)), all of which are approved by OMB. Specifically, the information collected under the IND regulations is currently approved under OMB control number 0910–0014. The information collected under the IDE regulations is currently approved under OMB control number 0910–0078. The information collected under the IRB regulations is currently approved under OMB control number 0910–0130. The information collected in food additive and nutrient content claim petitions is currently approved under OMB control number 0910–0381 (general requirements) and 0910–0016 (Form FDA 3503). The information collected under the infant formula regulations is currently approved under OMB control number 0910–0256 (general requirements) and 0910–0188 (infant formula recalls).

Part 56 (21 CFR part 56) contains the general standards for the composition, operation, and responsibility of an IRB that reviews clinical investigations regulated by FDA under sections 505(i) and 520(g) of the FD&C Act, as well as clinical investigations that support applications for research or marketing permits for products regulated by FDA, including foods and dietary supplements that bear a nutrient content claim or a health claim, infant formulas,

food and color additives, drugs for human use, medical devices for human use, biological products for human use, and electronic products. Compliance with part 56 is intended to protect the rights and welfare of human subjects involved in such investigations.

The information collected under the IRB regulations, ''Protection of Human Subjects—Recordkeeping and Reporting Requirements for Institutional Review Boards (part 56)'', including the information collection activities in the provisions in § 56.108(a)(1) and (b), is currently approved under OMB control number 0910–0130. The information collected under the regulations for the registration of IRBs in § 56.106 is currently approved under OMB control number 0910–0279. The information collected for IRB review and approval for the IDE regulations (part 812) is currently approved under OMB control number 0910–0078. The information collected for premarket approval of medical devices (part 814 (21 CFR part 814)) is currently approved under OMB control number 0910–0231. The information collected under the regulations for IRB requirements for humanitarian use devices (part 814, subpart H) is currently approved under OMB control number 0910–0332. The information collected under the regulations for IRB review and approval of INDs (part 312) is currently approved under OMB control number 0910–0014.

This new collection of information is limited to certain provisions in part 50, subpart B (informed consent of human subjects), and part 56 (IRBs), not currently approved under the OMB control numbers referenced elsewhere in this document. Those new proposed collections of information in part 50 are §§ 50.24 (emergency research), 50.25 (elements of informed consent), and 50.27 (documentation of informed consent).

In part 56, those new proposed collections of information are in § 56.109(e) (IRB written notification to approve or disapprove research); § 56.109(f) (continuing review of research); § 56.113 (suspension or termination of IRB approval of research); § 56.120(a) (IRB response to lesser administrative actions for noncompliance); and § 56.123 (reinstatement of an IRB or institution).

In § 56.109(f), the amount of time an IRB spends on the continuing review of a particular study will vary depending on the nature and complexity of the research, the amount and type of new information presented to the IRB, and whether the investigator is seeking approval of substantive changes to the research protocol or informed consent document. For many studies, continuing review can be fairly straightforward, and the IRB should be able to complete its deliberations and approve the research within a brief period of time.

When an IRB or institution violates the regulations, FDA issues to the IRB or institution a noncompliance letter (see § 56.120(a)). The IRB or institution must respond to the noncompliance letter describing the corrective actions that will be taken by the IRB or institution. FDA estimates about five IRBs or institutions will be issued a noncompliance letter annually. We estimate that the IRB's or institution's response will take about 10 hours to prepare, with an estimated total annual burden of 50 hours.

To date, no IRB or institution has been disqualified by FDA under § 56.121. Therefore, no IRB or institution has been reinstated under § 56.123. For this reason, we estimate the annual reporting burden for one respondent only. We estimate a 5-hour burden per response, with an estimated total annual burden of 5 hours.

Those regulatory provisions in parts 50 and 56 not currently approved under certain OMB control numbers are shown in table 1.

FDA estimates the burden of this collection of information as follows:

TABLE 1—ESTIMATED ANNUAL REPORTING BURDEN [1]

21 CFR Section	Number of respondents	Number of responses per respondent	Total annual responses	Average burden per response	Total hours
56.109(e) IRB Written Notification to Approve or Disapprove Research; 56.109(f) Continuing Review; 50.25 Elements of Informed Consent; and 50.27 Documentation of Informed Consent	6,000	40	240,000	1	240,000
50.24 Exception from Informed Consent for Emergency Research	5	3	15	1	15
56.113 Suspension or Termination of IRB Approval of Research	6,000	1	6,000	0.5 (30 minutes)	3,000
56.120(a) IRB Response to Lesser Administrative Actions for Noncompliance	5	1	5	10	50
56.123 Reinstatement of an IRB or Institution	1	1	1	5	5
Total					243,070

[1] There are no capital costs or operating and maintenance costs associated with this collection of information.

Dated: April 18, 2013.

Leslie Kux,

Assistant Commissioner for Policy.

[FR Doc. 2013–09622 Filed 4–23–13; 8:45 am]

BILLING CODE 4160–01–P

DEPARTMENT OF HEALTH AND HUMAN SERVICES

Food and Drug Administration

[Docket No. FDA–2013–D–0401]

Draft Guidance for Industry on Safety Considerations for Container Labels and Carton Labeling Design To Minimize Medication Errors; Availability

AGENCY: Food and Drug Administration, HHS.

ACTION: Notice.

SUMMARY: The Food and Drug Administration (FDA) is announcing the availability of a draft guidance for industry entitled ''Safety Considerations for Container Labels and Carton Labeling Design to Minimize Medication Errors.'' The draft guidance focuses on safety aspects of the container label and carton labeling design for prescription drug and biological products. The draft guidance provides sponsors of new drug applications (NDAs), biologics licensing applications (BLAs), abbreviated new drug applications (ANDAs), and prescription drugs marketed without an approved NDA or ANDA with a set of principles and recommendations for ensuring that critical elements of product container labels and carton labeling are designed to promote safe dispensing, administration, and use of the product to minimize medication errors.

DATES: Although you can comment on any guidance at any time (see 21 CFR 10.115(g), to ensure that the Agency considers your comments on this draft guidance before it begins work on the final version of the guidance, submit either electronic or written comments on the draft guidance by June 24, 2013.

ADDRESSES: Submit written requests for single copies of this draft guidance to the Division of Drug Information, Center for Drug Evaluation and Research, Food and Drug Administration, 10903 New Hampshire Ave., Bldg. 51, rm. 2201, Silver Spring, MD 20993–0002. Send one self-addressed adhesive label to assist that office in processing your requests. See the **SUPPLEMENTARY INFORMATION** section for electronic access to the guidance document.

Submit electronic comments on the draft guidance to *http://www.regulations.gov.* Submit written comments to the Division of Dockets Management (HFA–305), Food and Drug Administration, 5630 Fishers Lane, rm. 1061, Rockville, MD 20852.

FOR FURTHER INFORMATION CONTACT: Carol Holquist, Center for Drug Evaluation and Research, Food and Drug Administration, 10903 New Hampshire Ave., Bldg. 22, Rm. 4416, Silver Spring, MD 20993–0002, 301–796–0171.

SUPPLEMENTARY INFORMATION:

I. Background

FDA is announcing the availability of a draft guidance for industry entitled ''Safety Considerations for Container Labels and Carton Labeling Design to Minimize Medication Errors.'' In Title I of the Food and Drug Administration Amendments Act of 2007 (FDAAA) (Pub. L. 110–85), Congress reauthorized and expanded the Prescription Drug User Fee Act program for fiscal years (FYs) 2008 through 2012 (PDUFA IV). As part of the performance goals and procedures set forth in an enclosure to the letter from the Secretary of Health and Human Services referred to in section 101(c) of FDAAA, FDA committed to certain performance goals and procedures. (See *http://www.fda.gov/ForIndustry/UserFees/PrescriptionDrugUserFee/ucm119243.htm*). In that letter, FDA stated that it would use fees collected under PDUFA to implement various measures to reduce medication errors related to look-alike and sound-alike proprietary names, unclear label abbreviations, acronyms, dose designations, and error-prone label and packaging designs. Among these measures, FDA agreed that by the end of FY 2010, after public consultation with academia, industry, other stakeholders, and the general public, the Agency would publish draft guidance describing practices for naming, labeling, and packaging drugs and biologics to reduce medication errors. On June 24 and 25, 2010, FDA held a public workshop and opened a public docket (Docket No. FDA–2010–N–0168) to receive comments on these measures.

This draft guidance document, which addresses safety achieved through the design of drug product container labels and carton labeling design, is the second in a series of three planned guidance documents to minimize risks contributing to medication errors. The first guidance focuses on minimizing risks with the design of drug product and container closure design (December 13, 2012, 77 FR 74196), and the third guidance will focus on minimizing risks with drug product nomenclature.

This draft guidance is being issued consistent with FDA's good guidance practices regulation (21 CFR 10.115). The draft guidance represents the Agency's current thinking on addressing safety achieved through drug product design to minimize medication errors. It does not create or confer any rights for or on any person and does not operate to bind FDA or the public. An alternative approach may be used if such approach satisfies the requirements of the applicable statutes and regulations.

II. Comments

Interested persons may submit either electronic comments regarding this document to *http://www.regulations.gov* or written comments to the Division of Dockets Management (see **ADDRESSES**). It is only necessary to send one set of comments. Identify comments with the docket number found in brackets in the heading of this document. Received comments may be seen in the Division of Dockets Management between 9 a.m. and 4 p.m., Monday through Friday, and will be posted to the docket at *http://www.regulations.gov.*

III. Paperwork Reduction Act of 1995

In accordance with the Paperwork Reduction Act of 1995 (44 U.S.C. 3501–3520), before publication of the final guidance document, FDA intends to solicit public comment and obtain OMB approval for any information collections recommended in this draft guidance that are new or that would represent material modifications to previously approved collections of information found in FDA regulations.

IV. Electronic Access

Persons with access to the Internet may obtain the document at *http://www.fda.gov/Drugs/GuidanceComplianceRegulatoryInformation/Guidances/default.htm,* or *http://www.regulations.gov.*

Dated: April 18, 2013.

Leslie Kux,

Assistant Commissioner for Policy.

[FR Doc. 2013–09640 Filed 4–23–13; 8:45 am]

BILLING CODE 4160–01–P

DEPARTMENT OF HEALTH AND HUMAN SERVICES

Indian Health Service

Tribal Management Grant Program

Announcement Type: New and Competing Continuation.

Funding Announcement Number: HHS–2013–IHS–TMD–0001.

Catalog of Federal Domestic Assistance Number: 93.228.

Key Dates

Application Deadline Date: May 31, 2013.

Review Date: July 8–12, 2013.

Earliest Anticipated Start Date: September 1, 2013.

Signed Tribal Resolutions Due Date: July 7, 2013.

I. Funding Opportunity Description

Statutory Authority

The Indian Health Service (IHS) is accepting competitive grant applications for the Tribal Management Grant (TMG) Program. This program is authorized under: 25 U.S.C. 450h(b)(2) and 25 U.S.C. 450h(e) of the Indian Health Self-Determination and Education Assistance Act (ISDEAA), Public Law (Pub. L.) 93–638, as amended. This program is described in the Catalog of Federal Domestic Assistance under 93.228.

Background

The TMG Program is a competitive grant program that is capacity building and developmental in nature and has been available for Federally-recognized Indian Tribes and Tribal organizations (T/TO) since shortly after the passage of the ISDEAA in 1975. It was established to assist T/TO to assume all or part of existing IHS programs, functions, services, and activities (PFSA) and further develop and improve their health management capability. The TMG Program provides discretionary competitive grants to T/TO to establish goals and performance measures for current health programs; assess current management capacity to determine if new components are appropriate; analyze programs to determine if T/TO management is practicable; and develop infrastructure systems to manage or organize PFSA.

Purpose

The purpose of this IHS grant announcement is to announce the availability of the TMG Program to enhance and develop health management infrastructure and assist T/TO in assuming all or part of existing IHS PSFA through a Title I contract and assist established Title I contractors and Title V compactors to further develop and improve their management capability. In addition, TMGs are available to T/TO under the authority of 25 U.S.C. 450h(e) for: (1) Obtaining technical assistance from providers designated by the T/TO (including T/TO that operate mature contracts) for the purposes of program planning and evaluation, including the development of any management systems necessary for contract management and the development of cost allocation plans for indirect cost rates; and (2) the planning, designing, monitoring, and evaluation of Federal programs serving the T/TO, including Federal administrative functions.

II. Award Information

Type of Award

Grant.

Estimated Funds Available

The total amount of funding identified for the current fiscal year 2013 is approximately $2,679,000. Individual award amounts are anticipated to be between $50,000 and $100,000. All competing and continuation awards issued under this announcement are subject to the availability of funds. In the absence of funding, the IHS is under no obligation to make any awards selected for funding under this announcement.

Anticipated Number of Awards

Approximately 20–25 awards will be issued under this program announcement.

Project Period

The project periods vary based on the project type selected. Project periods could run from one, two, or three years and will run consecutively from the earliest anticipated start date of September 1, 2013 through August 31, 2014, for one year projects; September 1, 2013 through August 31, 2015 for two year projects; and September 1, 2013 through August 31, 2016 for three year projects. Please refer to ''Eligible TMG Project Types, Maximum Funding Levels and Project Periods'' below for additional details. State the number of years for the project period and include the exact dates.

III. Eligibility Information

I. Eligibility

Eligible Applicants: ''Indian Tribes'' and ''Tribal organizations'' (T/TO) as defined by the ISDEAA, are eligible to apply for the TMG Program. The definitions for each entity type are outlined below. Only one application per T/TO is allowed.

Definitions: ''Indian Tribe'' means any Indian tribe, band, nation, or other organized group or community, including any Alaska Native village or regional or village corporation as defined in or established pursuant to the Alaska Native Claims Settlement Act (85 Stat. 688) [43 U.S.C. 1601 et seq.], which is recognized as eligible for the special programs and services provided by the United States to Indians because of their status as Indians. 25 U.S.C. 450b(e).

''Tribal organization'' means the recognized governing body of any Indian tribe; any legally established organization of Indians which is controlled, sanctioned, or chartered by such governing body or which is democratically elected by the adult members of the Indian community to be served by such organization and which includes the maximum participation of Indians in all phases of its activities. 25 U.S.C. 450b(l).

Tribal organizations must provide proof of non-profit status. Tribal organizations are eligible to receive this grant only if it is incorporated for the primary purpose of improving AI/AN health, and it is representing the Tribes or AN villages in which it is located.

Full competition announcement: This is a full competition announcement.

Eligible TMG Project Types, Maximum Funding Levels and Project Periods: The TMG Program consists of four project types: (1) Feasibility study; (2) planning; (3) evaluation study; and (4) health management structure. Applicants may submit applications for one project type only. Applicants must state the project type selected. Applications that address more than one project type will be considered ineligible. The maximum funding levels noted include both direct and indirect costs. Applicant budgets may not exceed the maximum funding level or project period identified for a project type. Applicants whose budget or project period exceed the maximum funding level or project period will be deemed ineligible and will not be reviewed. Please refer to Section IV.5, ''Funding Restrictions'' for further information regarding ineligible project activities.

1. Feasibility Study (Maximum Funding/Project Period: $70,000/12 Months)

The Feasibility Study must include a study of a specific IHS program or segment of a program to determine if Tribal management of the program is possible. The study shall present the

planned approach, training, and resources required to assume Tribal management of the program. The study must include the following four components:

- Health needs and health care services assessments that identify existing health care services and delivery systems, program divisibility issues, health status indicators, unmet needs, volume projections, and demand analysis.
- Management analysis of existing management structures, proposed management structures, implementation plans and requirements, and personnel staffing requirements and recruitment barriers.
- Financial analysis of historical trends data, financial projections and new resource requirements for program management costs and analysis of potential revenues from Federal/non-Federal sources.
- Decision statement/report that incorporates findings, conclusions and recommendations; the presentation of the study and recommendations to the Tribal governing body for determination regarding whether Tribal assumption of program(s) is desirable or warranted.

2. PLANNING (Maximum Funding/Project Period: $50,000/12 Months)

Planning projects entail a collection of data to establish goals and performance measures for the operation of current health programs or anticipated PFSA under a Title I contract. Planning projects will specify the design of health programs and the management systems (including appropriate policies and procedures) to accomplish the health priorities of the T/TO. For example, planning projects could include the development of a Tribal Specific Health Plan or a Strategic Health Plan, etc. Please note that updated Healthy People information and Healthy People 2020 objectives are available in electronic format at the following Web site: *http://www.health.gov/healthypeople/publications.* The Public Health Service (PHS) encourages applicants submitting strategic health plans to address specific objectives of Healthy People 2020.

3. Evaluation Study (Maximum Funding/Project Period: $50,000/12 Months)

The Evaluation Study must include a systematic collection, analysis, and interpretation of data for the purpose of determining the value of a program. The extent of the evaluation study could relate to the goals and objectives, policies and procedures, or programs regarding targeted groups. The evaluation study could also be used to determine the effectiveness and efficiency of a Tribal program operation (i.e., direct services, financial management, personnel, data collection and analysis, third-party billing, etc.), as well as to determine the appropriateness of new components of a Tribal program operation that will assist Tribal efforts to improve their health care delivery systems.

4. Health Management Structure (Average Funding/Project Period: $100,000/12 months; maximum funding/project period: $300,000/36 months)

The first year maximum funding level is limited to $150,000 for multi-year projects. The Health Management Structure component allows for implementation of systems to manage or organize PFSA. Management structures include health department organizations, health boards, and financial management systems; including systems for accounting, personnel, third-party billing, medical records, management information systems, etc. This includes the design, improvement, and correction of management systems that address weaknesses identified through quality control measures, internal control reviews, and audit report findings under the Office of Management and Budget (OMB) *OMB Circular A–133*, Audits of States, Local Governments and Non-Profit Organizations and ISDEAA requirements. The OMB Circular A–133 can be found at the following Web site: *http://www.whitehouse.gov/omb/circulars_default.*

For the minimum standards for the management systems used by Indian T/TO when carrying out self-determination contracts, please see 25 CFR Part 900, Contracts Under the Indian Self-Determination and Education Assistance Act, Subpart F—''Standards for Tribal or Tribal Organization Management Systems,'' §§ 900.35–900.60. For operational provisions applicable to carrying out Self-Governance compacts, please see 42 CFR Part 137, Tribal Self-Governance, Subpart I,—''Operational Provisions'' §§ 137.160—137.220.

Please see Section IV ''Application and Submission Information'' for information on how to obtain a copy of the TMG application package.

Note: Please refer to Section IV.2 (Application and Submission Information/Subsection 2, Content and Form of Application Submission) for additional proof of applicant status documents required such as Tribal resolutions, proof of non-profit status, etc.

2. Cost Sharing or Matching

The IHS does not require matching funds or cost sharing for grants or cooperative agreements.

3. Other Requirements

If application budgets exceed the highest dollar amount outlined under the ''Estimated Funds Available'' section within this funding announcement, the application will be considered ineligible and will not be reviewed for further consideration. If deemed ineligible, IHS will not return the application. The applicant will be notified by email by the Division of Grants Management (DGM) of this decision.

Tribal Resolution

A. Tribal Resolution—A resolution of the Indian Tribe served by the project must accompany the application submission. This can be attached to the electronic application. An Indian Tribe that is proposing a project affecting another Indian Tribe must include resolutions from all affected Tribes to be served. Applications by Tribal organizations will not require a specific Tribal resolution if the current Tribal resolution(s) under which they operate would encompass the proposed grant activities. Draft resolutions are acceptable in lieu of an official resolution. However, an official signed Tribal resolution must be received by the DGM prior to the beginning of the Objective Review. If an official signed resolution is not received by the Review Date listed under the Key Dates section on page one of this announcement, the application will be considered incomplete and ineligible.

B. Tribal organizations applying for technical assistance and/or training grants must submit documentation that the Tribal organization is applying upon the request of the Indian Tribe/Tribes it intends to serve.

C. Documentation for Priority I Participation requires a copy of the **Federal Register** notice or letter from the Bureau of Indian Affairs verifying establishment of Federally-recognized Tribal status within the last five years. The date on the documentation must reflect that Federal recognition was received during or after March 2008.

D. Documentation for Priority II Participation requires a copy of the most current transmittal letter and Attachment A from the Department of Health and Human Services (HHS), Office of Inspector General (OIG), National External Audit Review Center (NEAR). See ''FUNDING PRIORITIES'' below for more information. If an

applicant is unable to locate a copy of their most recent transmittal letter or needs assistance with audit issues, information or technical assistance may be obtained by contacting the IHS, Office of Finance and Accounting, Division of Audit at (301) 443–1270, or the NEAR help line at (800) 732–0679 or (816) 426–7720. Federally-recognized Indian Tribes or Tribal organizations not subject to Single Audit Act requirements must provide a financial statement identifying the Federal dollars in the footnotes. The financial statement must also identify specific weaknesses/recommendations that will be addressed in the TMG proposal and that are related to 25 CFR Part 900, Subpart F—''Standards for Tribal and Tribal Organization Management Systems.''

E. Documentation of Consortium Participation—If an Indian Tribe submitting an application is a member of an eligible intertribal consortium, the Tribe must:

—Identify the consortium.
—Indicate if the consortium intends to submit a TMG application.
—Demonstrate that the Tribe's application does not duplicate or overlap any objectives of the consortium's application.
—Identify all of the consortium member Tribes.
—Identify if any of the member Tribes intend to submit a TMG application of their own.
—Demonstrate that the consortium's application does not duplicate or overlap any objectives of the other consortium members who may be submitting their own TMG application.

Funding Priorities: The IHS has established the following funding priorities for TMG awards:

- Priority I—Any Indian Tribe that has received Federal recognition (including restored, funded, or unfunded) within the past five years, specifically received during or after March 2008, will be considered Priority I.
- Priority II—All other eligible Federally-recognized Indian Tribes or Tribal organizations submitting a competing continuation application or a new application for the sole purpose of addressing audit material weaknesses will be considered Priority II.

Note the following definitions:

Audit finding means deficiencies which the auditor is required by OMB Circular A–133, Subpart E 'Auditors', Section 510 'Audit findings', Subsection (a) 'Audit findings reported', to report in the schedule of findings and questioned costs. Circular No. A–133 can be found at *http://www.whitehouse.gov/omb/circulars_default.*

Material weakness – The ''Statements on Auditing Standards 115'' defines material weakness as a deficiency, or combination of deficiencies, in internal control, such that there is a reasonable possibility that a material misstatement of the entity's financial statements will not be prevented, or detected and corrected on a timely basis.

Source: *http://www.whitehouse.gov/sites/default/files/omb/fedreg/2007/062607_audits.pdf.*

Significant deficiency—The Statements on Auditing Standards 115 defines significant deficiency as a deficiency, or a combination of deficiencies, in internal control that is less severe than a material weakness, yet important enough to merit attention by those charged with governance.

Source: *http://www.whitehouse.gov/sites/default/files/omb/fedreg/2007/062607_audits.pdf.*

The audit findings are identified in Attachment A of the transmittal letter received from the HHS/OIG/NEAR. Please identify the material weaknesses to be addressed by underlining the item(s) listed on Attachment A.

Federally-recognized Indian Tribes or Tribal organizations not subject to Single Audit Act requirements must provide a financial statement identifying the Federal dollars received in the footnotes. The financial statement should also identify specific weaknesses/recommendations that will be addressed in the TMG proposal and that are related to 25 CFR Part 900, Subpart F—''Standards for Tribal and Tribal Organization Management Systems.''

Priority II participation is only applicable to the Health Management Structure project type. For more information, see ''Eligible TMG Project Types, Maximum Funding Levels and Project Periods'' in Section II.

- Priority III—All other eligible Federally-recognized Indian Tribes or Tribal Organizations submitting a competing continuation application or a new application will be considered Priority III.

The funding of approved Priority I applicants will occur before the funding of approved Priority II applicants. Priority II applicants will be funded before approved Priority III applicants. Funds will be distributed until depleted.

Please refer to Section IV, ''Application and Submission Information,'' particularly Item 5, ''Funding Restrictions'' and Section V. ''Application Review/Information'' regarding other application submission information and/or requirements.

Letters of Intent will not be required under this funding opportunity announcement.

An applicant submitting any of the above additional documentation after the initial application submission due date is required to ensure the information was received by the IHS by obtaining documentation confirming delivery (i.e. FedEx tracking, postal return receipt, etc.).

IV. Application and Submission Information

1. Obtaining Application Materials

The application package and detailed instructions for this announcement can be found at *http://www.Grants.gov* or *https://www.ihs.gov/dgm/index.cfm?module=dsp_dgm_funding.*

Questions regarding the electronic application process may be directed to Mr. Paul Gettys, Grants Systems Coordinator, at (301) 443–2114.

2. Content and Form Application Submission

The applicant must include the project narrative as an attachment to the application package. Mandatory documents for all applicants include:

- Table of contents.
- Abstract (one page) summarizing the project.
- Application forms:
  - SF–424, Application for Federal Assistance.
  - SF–424A, Budget Information—Non-Construction Programs.
  - SF–424B, Assurances—Non-Construction Programs.
- Budget Justification and Narrative (must be single spaced and not exceed five pages).
- Project Narrative (must be single spaced and not exceed 14 pages).
  - Background information on the Tribe.
  - Proposed scope of work, objectives, and activities that provide a description of what will be accomplished, including a one-page Timeframe Chart.
- Tribal Resolution or Tribal Letter of Support (Tribal Organizations only).
- Letter of Support from Organization's Board of Directors.
- 501(c)(3) Certificate (if applicable).
- Biographical sketches for all Key Personnel.
- Contractor/Consultant resumes or qualifications and scope of work.
- Disclosure of Lobbying Activities (SF–LLL).
- Certification Regarding Lobbying (GG-Lobbying Form).
- Copy of current Negotiated Indirect Cost rate (IDC) agreement (required) in order to receive IDC.

- Organizational Chart (optional).
- Documentation of current OMB A–133 required Single Audit (if applicable).

Acceptable forms of documentation include:

○ Email confirmation from Federal Audit Clearinghouse (FAC) that audits were submitted; or

○ Face sheets from audit reports. These can be found on the FAC Web site: *http://harvester.census.gov/sac/dissem/accessoptions.html?submit=Go+To+Database*

Public Policy Requirements

All Federal-wide public policies apply to IHS grants with exception of the Discrimination policy.

Requirements for Project and Budget Narratives

A. Project Narrative

This narrative should be a separate Word document that is no longer than 14 pages and must: Be single-spaced, be type written, have consecutively numbered pages, use black type not smaller than 12 characters per one inch, and be printed on one side only of standard size 8½″ x 11″ paper.

Be sure to succinctly answer all questions listed under the evaluation criteria (refer to Section V.1, Evaluation criteria in this announcement) and place all responses and required information in the correct section (noted below), or they will not be considered or scored. These narratives will assist the Objective Review Committee (ORC) in becoming more familiar with the grantee's activities and accomplishments prior to this grant award. If the narrative exceeds the page limit, only the first 14 pages will be reviewed. The 14-page limit for the narrative does not include the work plan, standard forms, Tribal resolutions, table of contents, budget, budget justifications, narratives, and/or other appendix items.

There are three parts to the narrative: Part A—Program Information; Part B—Program Planning and Evaluation; and Part C—Program Report. See below for additional details about what must be included in the narrative.

Part A: Program Information (4 Pages)

Section 1: Needs

Describe how the T/TO has determined the need to either enhance or develop its management capability to either assume PSFAs or not in the interest of self-determination. Note the progression of previous TMG projects/awards.

Part B: Program Planning and Evaluation (11 Pages)

Section 1: Program Plans

Describe fully and clearly the direction the T/TO plans to take with the selected TMG project type including how the T/TO plans to demonstrate improved health and services to the community it serves. Include proposed timelines.

Section 2: Program Evaluation

Describe fully and clearly the improvements that will be made by the T/TO that will impact their management capability or prepare them for future improvements to their organization that will allow them to manage their health care system and identify the anticipated or expected benefits for the Tribe.

Part C: Program Report (3 Pages)

Section 1: Describe major Accomplishments over the last 24 months.

Please identify and describe significant program achievements associated with the delivery of quality health services. Provide a comparison of the actual accomplishments to the goals established for the project period, or if applicable, provide justification for the lack of progress.

Section 2: Describe major Activities over the last 24 months.

Please identify and summarize recent major health related project activities of the work done during the project period.

B. Budget Narrative

This narrative must describe the budget requested and match the scope of work described in the project narrative. The budget narrative should not exceed five pages.

3. Submission Dates and Times

Applications must be submitted electronically through Grants.gov by 12:00 a.m., midnight Eastern Daylight Time (EDT) on the Application Deadline Date listed in the Key Dates section on page one of this announcement. Any application received after the application deadline will not be accepted for processing, nor will it be given further consideration for funding. The applicant will be notified by the DGM via email of this decision.

If technical challenges arise and assistance is required with the electronic application process, contact Grants.gov Customer Support via email to *support@grants.gov* or at (800) 518–4726. Customer Support is available to address questions 24 hours a day, 7 days a week (except on Federal holidays). If problems persist, contact Mr. Paul Gettys, DGM (*Paul.Gettys@ihs.gov*) at (301) 443–2114. Please be sure to contact Mr. Gettys at least ten days prior to the application deadline. Please do not contact the DGM until you have received a Grants.gov tracking number. In the event you are not able to obtain a tracking number, call the DGM as soon as possible.

If the applicant needs to submit a paper application instead of submitting electronically via Grants.gov, prior approval must be requested and obtained (see Section IV.6 below for additional information). The waiver must be documented in writing (emails are acceptable), before submitting a paper application. A copy of the written approval must be submitted along with the hardcopy that is mailed to the DGM. Once the waiver request has been approved, the applicant will receive a confirmation of approval and the mailing address to submit the application. Paper applications that are submitted without a waiver from the Acting Director of DGM will not be reviewed or considered further for funding. The applicant will be notified via email of this decision by the Grants Management Officer of DGM. Paper applications must be received by the DGM no later than 5:00 p.m., EDT, on the Application Deadline Date listed in the Key Dates section on page one of this announcement. Late applications will not be accepted for processing or considered for funding.

4. Intergovernmental Review

Executive Order 12372 requiring intergovernmental review is not applicable to this program.

5. Funding Restrictions

- Pre-award costs are not allowable.
- The available funds are inclusive of direct and appropriate indirect costs.
- Only one grant/cooperative agreement will be awarded per applicant.
- IHS will not acknowledge receipt of applications.
- The TMG may not be used to support recurring operational programs or to replace existing public and private resources. Funding received under a recurring Public Law 93–638 contract cannot be totally supplanted or totally replaced. Exception is allowed to charge a portion or percentage of salaries of existing staff positions involved in implementing the TMG grant, if applicable. However, this percentage of TMG funding must reflect supplementation of funding for the project not supplantation of existing ISDEAA contract funds. Supplementation is ''adding to a

program'' whereas supplantation is ''taking the place of'' funds. An entity cannot use the TMG funds to supplant the ISDEAA contract or recurring funding.

• Ineligible Project Activities—The inclusion of the following projects or activities in an application will render the application ineligible.

○ Planning and negotiating activities associated with the intent of a Tribe to enter the IHS Self-Governance Project. A separate grant program is administered by the IHS for this purpose. Prospective applicants interested in this program should contact Mrs. Anna Johnson, Program Analyst, Office of Tribal Self-Governance, Indian Health Service, Reyes Building, 801 Thompson Avenue, Suite 240, Rockville, Maryland 20852, (301) 443–7821, and request information concerning the ''Tribal Self-Governance Program Planning Cooperative Agreement Announcement'' or the ''Negotiation Cooperative Agreement Announcement.''

○ Projects related to water, sanitation, and waste management.

○ Projects that include direct patient care and/or equipment to provide those medical services to be used to establish or augment or continue direct patient clinical care. Medical equipment that is allowable under the Special Diabetes Grant Program is not allowable under the TMG Program.

○ Projects that include recruitment efforts for direct patient care services.

○ Projects that include long-term care or provision of any direct services.

○ Projects that include tuition, fees, or stipends for certification or training of staff to provide direct services.

○ Projects that include pre-planning, design, and planning of construction for facilities, including activities relating to program justification documents.

○ Projects that propose more than one project type. Refer to Section II, ''Award Information,'' specifically ''Eligible TMG Project Types, Maximum Funding Levels and Project Periods'' for more information. An example of a proposal with more than one project type that would be considered ineligible may include the creation of a strategic health plan (defined by TMG as a planning project type) and improving third-party billing structures (defined by TMG as a health management structure project type). Multi-year applications that include in the first year planning, evaluation, or feasibility activities with the remainder of the project years addressing management structure are also deemed ineligible.

• Other Limitations—A current TMG recipient cannot be awarded a new, renewal, or competing continuation grant for any of the following reasons:

○ The grantee will be administering two TMGs at the same time or have overlapping project/budget periods;

○ The current project is not progressing in a satisfactory manner;

○ The current project is not in compliance with program and financial reporting requirements; or

○ The applicant has an outstanding delinquent Federal debt. No award shall be made until either:

▪ The delinquent account is paid in full; or

▪ A negotiated repayment schedule is established and at least one payment is received.

6. Electronic Submission Requirements

All applications must be submitted electronically. Please use the *http://www.Grants.gov* Web site to submit an application electronically and select the ''Find Grant Opportunities'' link on the homepage. Download a copy of the application package, complete it offline, and then upload and submit the completed application via the *http://www.Grants.gov* Web site. Electronic copies of the application may not be submitted as attachments to email messages addressed to IHS employees or offices.

If the applicant receives a waiver to submit paper application documents, they must follow the rules and timelines that are noted below. The applicant must seek assistance at least ten days prior to the Application Deadline Date listed in the Key Dates section on page one of this announcement.

Applicants that do not adhere to the timelines for System for Award Management (SAM) and/or *http://www.Grants.gov* registration or that fail to request timely assistance with technical issues will not be considered for a waiver to submit a paper application.

Please be aware of the following:

• Please search for the application package in *http://www.Grants.gov* by entering the CFDA number or the Funding Opportunity Number. Both numbers are located in the header of this announcement.

• If you experience technical challenges while submitting your application electronically, please contact Grants.gov Support directly at: *support@grants.gov* or (800) 518–4726. Customer Support is available to address questions 24 hours a day, 7 days a week (except on Federal holidays).

• Upon contacting Grants.gov, obtain a tracking number as proof of contact. The tracking number is helpful if there are technical issues that cannot be resolved and a waiver from the agency must be obtained.

• If it is determined that a waiver is needed, you must submit a request in writing (emails are acceptable) to *GrantsPolicy@ihs.gov* with a copy to *Tammy.Bagley@ihs.gov.* Please include a clear justification for the need to deviate from the standard electronic submission process.

• If the waiver is approved, the application should be sent directly to the DGM by the Application Deadline Date listed in the Key Dates section on page one of this announcement.

• Applicants are strongly encouraged not to wait until the deadline date to begin the application process through Grants.gov as the registration process for SAM and Grants.gov could take up to fifteen working days.

• Please use the optional attachment feature in Grants.gov to attach additional documentation that may be requested by the DGM.

• All applicants must comply with any page limitation requirements described in this Funding Announcement.

• After electronically submitting the application, the applicant will receive an automatic acknowledgment from Grants.gov that contains a Grants.gov tracking number. The DGM will download your application from Grants.gov and provide necessary copies to the appropriate agency officials. Neither the DGM nor the ODSCT will notify the applicant that the application has been received.

• Email applications will not be accepted under this announcement.

Dun and Bradstreet (D&B) Data Universal Numbering System (DUNS)

All IHS applicants and grantee organizations are required to obtain a DUNS number and maintain an active registration in the SAM database. The DUNS number is a unique 9-digit identification number provided by D&B which uniquely identifies your entity. The DUNS number is site specific; therefore, each distinct performance site may be assigned a DUNS number. Obtaining a DUNS number is easy, and there is no charge. To obtain a DUNS number, you may access it through *http://fedgov.dnb.com/webform,* or to expedite the process, call (866) 705–5711.

All HHS recipients are required by the Federal Funding Accountability and Transparency Act of 2006, as amended (''Transparency Act''), to report information on subawards. Accordingly, all IHS grantees must notify potential first-tier subrecipients that no entity may receive a first-tier subaward unless

the entity has provided its DUNS number to the prime grantee organization. This requirement ensures the use of a universal identifier to enhance the quality of information available to the public pursuant to the ''Transparency Act.''

System for Award Management (SAM)

Organizations that were not registered with Central Contractor Registration (CCR) and have not registered with SAM will need to obtain a DUNS number first and then access the SAM online registration through the SAM home page at *https://www.sam.gov* (U.S. organizations will also need to provide an Employer Identification Number from the Internal Revenue Service that may take an additional 2–5 weeks to become active). Completing and submitting the registration takes approximately one hour to complete and your SAM registration will take 3–5 business days to process. Registration with the SAM is free of charge. Applicants may register online at *https://www.sam.gov.*

Additional information on implementing the Transparency Act, including the specific requirements for DUNS and SAM, can be found on the IHS Grants Management, Grants Policy Web site: *https://www.ihs.gov/dgm/index.cfm?module=dsp_dgm_policy_topics.*

V. Application Review Information

The instructions for preparing the application narrative also constitute the evaluation criteria for reviewing and scoring the application. Weights assigned to each section are noted in parentheses. The 14 page narrative should include only the first year of activities; information for multi-year projects should be included as an appendix. See ''Multi-year Project Requirements'' at the end of this section for more information. The narrative section should be written in a manner that is clear to outside reviewers unfamiliar with prior related activities of the applicant. It should be well organized, succinct, and contain all information necessary for reviewers to understand the project fully. Points will be assigned to each evaluation criteria adding up to a total of 100 points. A minimum score of 60 points is required for funding. Points are assigned as follows:

1. Criteria

A. Introduction and Need for Assistance (20 Points)

(1) Describe the T/TO's current health operation. Include what programs and services are currently provided (i.e., Federally-funded, State-funded, etc.), information regarding technologies currently used (i.e., hardware, software, services, etc.), and identify the source(s) of technical support for those technologies (i.e., Tribal staff, Area Office, vendor, etc.). Include information regarding whether the T/TO has a health department and/or health board and how long it has been operating.

(2) Describe the population to be served by the proposed project. Include the number of eligible IHS beneficiaries who currently use the services.

(3) Describe the geographic location of the proposed project including any geographic barriers to the health care users in the area to be served.

(4) Identify all TMGs received since FY 2008, dates of funding and a summary of project accomplishments. State how previous TMG funds facilitated the progression of health development relative to the current proposed project. (Copies of reports will not be accepted.)

(5) Identify the eligible project type and priority group of the applicant.

(6) Explain the need/reason for the proposed project by identifying specific gaps or weaknesses in services or infrastructure that will be addressed by the proposed project. Explain how these gaps/weaknesses have been assessed.

(7) If the proposed project includes information technology (i.e., hardware, software, etc.), provide further information regarding measures taken or to be taken that ensure the proposed project will not create other gaps in services or infrastructure (i.e., negatively affect or impact IHS interface capability, Government Performance and Results Act reporting requirements, contract reporting requirements, Information Technology (IT) compatibility, etc.) if applicable.

(8) Describe the effect of the proposed project on current programs (i.e., Federally-funded, State-funded, etc.) and, if applicable, on current equipment (i.e., hardware, software, services, etc.). Include the effect of the proposed project on planned/anticipated programs and/or equipment.

(9) Address how the proposed project relates to the purpose of the TMG Program by addressing the appropriate description that follows:

- Identify if the T/TO is an IHS Title I contractor. Address if the self-determination contract is a master contract of several programs or if individual contracts are used for each program. Include information regarding whether or not the Tribe participates in a consortium contract (i.e., more than one Tribe participating in a contract). Address what programs are currently provided through those contracts and how the proposed project will enhance the organization's capacity to manage the contracts currently in place.
- Identify if the T/TO is an IHS Title V compactor. Address when the T/TO entered into the compact and how the proposed project will further enhance the organization's management capabilities.
- Identify if the T/TO is not a Title I or Title V organization. Address how the proposed project will enhance the organization's management capabilities, what programs and services the organization is currently seeking to contract and an anticipated date for contract.

B. Project Objective(s), Workplan and Consultants (40 Points)

(1) Identify the proposed project objective(s) addressing the following:

- Objectives must be measureable and (if applicable) quantifiable.
- Objectives must be results oriented.
- Objectives must be time-limited.

Example: By installing new third-party billing software, the Tribe will increase the number of bills processed by 15 percent at the end of 12 months.

(2) Address how the proposed project will result in change or improvement in program operations or processes for each proposed project objective. Also address what tangible products are expected from the project (i.e., policies and procedures manual, health plan, etc.).

(3) Address the extent to which the proposed project will build local capacity to provide, improve, or expand services that address the need(s) of the target population.

(4) Submit a work plan in the Appendix which includes the following information:

- Provide the action steps on a timeline for accomplishing the proposed project objective(s).
- Identify who will perform the action steps.
- Identify who will supervise the action steps taken.
- Identify what tangible products will be produced during and at the end of the proposed project.
- Identify who will accept and/or approve work products during the duration of the proposed project and at the end of the proposed project.
- Include any training that will take place during the proposed project and who will be providing and attending the training.
- Include evaluation activities planned in the work plans.

(5) If consultants or contractors will be used during the proposed project, please include the following information in their scope of work (or note if consultants/contractors will not be used):

- Educational requirements.
- Desired qualifications and work experience.
- Expected work products to be delivered on a timeline.

If a potential consultant/contractor has already been identified, please include a resume in the Appendix.

(6) Describe what updates (i.e., revision of policies/procedures, upgrades, technical support, etc.) will be required for the continued success of the proposed project. Include when these updates are anticipated and where funds will come from to conduct the update and/or maintenance.

C. Program Evaluation (20 Points)

Each proposed objective requires an evaluation component to assess its progression and ensure its completion. Also, include the evaluation activities in the work plan.

Describe the proposed plan to evaluate both outcomes and processes. Outcome evaluation relates to the results identified in the objectives, and process evaluation relates to the work plan and activities of the project.

(1) For outcome evaluation, describe:

- What will the criteria be for determining success of each objective?
- What data will be collected to determine whether the objective was met?
- At what intervals will data be collected?
- Who will collect the data and their qualifications?
- How will the data be analyzed?
- How will the results be used?

(2) For process evaluation, describe:

- How will the project be monitored and assessed for potential problems and needed quality improvements?
- Who will be responsible for monitoring and managing project improvements based on results of ongoing process improvements and their qualifications?
- How will ongoing monitoring be used to improve the project?
- Describe any products, such as manuals or policies, that might be developed and how they might lend themselves to replication by others.
- How will the organization document what is learned throughout the project period?

(3) Describe any evaluation efforts planned after the grant period has ended.

(4) Describe the ultimate benefit to the Tribe that is expected to result from this project. An example of this might be the ability of the Tribe to expand preventive health services because of increased billing and third party payments.

D. Organizational Capabilities, Key Personnel and Qualifications (15 Points)

This section outlines the broader capacity of the organization to complete the project outlined in the work plan. It includes the identification of personnel responsible for completing tasks and the chain of responsibility for successful completion of the projects outlined in the work plan.

(1) Describe the organizational structure of the T/TO beyond health care activities, if applicable.

(2) Provide information regarding plans to obtain management systems if the T/TO does not have an established management system currently in place that complies with 25 CFR Part 900, Subpart F, ''Standards for Tribal or Tribal Organization Management Systems.'' State if management systems are already in place and how long the systems have been in place.

(3) Describe the ability of the organization to manage the proposed project. Include information regarding similarly sized projects in scope and financial assistance as well as other grants and projects successfully completed.

(4) Describe what equipment (i.e., fax machine, phone, computer, etc.) and facility space (i.e., office space) will be available for use during the proposed project. Include information about any equipment not currently available that will be purchased through the grant.

(5) List key personnel who will work on the project. Include all titles of key personnel in the work plan. In the Appendix, include position descriptions and resumes for all key personnel. Position descriptions should clearly describe each position and duties, indicating desired qualifications and experience requirements related to the proposed project. Resumes must indicate that the proposed staff member is qualified to carry out the proposed project activities. If a position is to be filled, indicate that information on the proposed position description.

(6) Address how the T/TO will sustain the position(s) after the grant expires if the project requires additional personnel (i.e., IT support, etc.). State if there is no need for additional personnel.

(7) If the personnel are to be only partially funded by this grant, indicate the percentage of time to be allocated to the project and identify the resources used to fund the remainder of the individual's salary.

E. Categorical Budget and Budget Justification (5 Points)

(1) Provide a categorical budget for each of the 12-month budget periods requested.

(2) If indirect costs are claimed, indicate and apply the current negotiated rate to the budget. Include a copy of the rate agreement in the Appendix.

(3) Provide a narrative justification explaining why each categorical budget line item is necessary and relevant to the proposed project. Include sufficient cost and other details to facilitate the determination of cost allowability (i.e., equipment specifications, etc.).

Multi-Year Project Requirements

For projects requiring a second and/or third year, include only Year 2 and/or Year 3 narrative sections (objectives, evaluation components and work plan) that differ from those in Year 1. For every project year, include a full budget justification and a detailed, itemized categorical budget showing calculation methodologies for each item. The same weights and criteria which are used to evaluate a one-year project or the first year of a multi-year project will be applied when evaluating the second and third years of a multi-year application. A weak second and/or third year submission could negatively impact the overall score of an application and result in elimination of the proposed second and/or third years with a recommendation for only a one-year award.

Appendix Items

- Work plan, logic model and/or time line for proposed objectives.
- Position descriptions for key staff.
- Resumes of key staff that reflect current duties.
- Consultant or contractor proposed scope of work and letter of commitment (if applicable).
- Current Indirect Cost Agreement.
- Organizational chart(s) highlighting proposed project staff and their supervisors as well as other key contacts within the organization and key community contacts.
- Map of area to benefit project identifying where target population resides and project location(s).
- Additional documents to support narrative (i.e. data tables, key news articles, etc.).

2. Review and Selection

Each application will be prescreened by the DGM staff for eligibility and completeness as outlined in the funding announcement. Incomplete applications and applications that are non-

responsive to the eligibility criteria will not be referred to the ORC. Applicants will be notified by DGM, via email, to outline minor missing components (i.e., signature on the SF–424, audit documentation, key contact form) needed for an otherwise complete application. All missing documents must be sent to DGM on or before the due date listed in the email of notification of missing documents required.

To obtain a minimum score for funding by the ORC, applicants must address all program requirements and provide all required documentation. If an applicant receives less than a minimum score, it will be considered to be ''Disapproved'' and will be informed via email by the IHS Program Office of their application's deficiencies. A summary statement outlining the strengths and weaknesses of the application will be provided to each disapproved applicant. The summary statement will be sent to the Authorized Organizational Representative (AOR) that is identified on the face page (SF–424), of the application within 30 days of the completion of the Objective Review.

VI. Award Administration Information

1. Award Notices

The Notice of Award (NoA) is a legally binding document signed by the Grants Management Officer and serves as the official notification of the grant award. The NoA will be initiated by the DGM in our grant system, GrantSolutions (*https://www.grantsolutions.gov*). Each entity that is approved for funding under this announcement will need to request or have a user account in GrantSolutions in order to retrieve their NoA. The NoA is the authorizing document for which funds are dispersed to the approved entities and reflects the amount of Federal funds awarded, the purpose of the grant, the terms and conditions of the award, the effective date of the award, and the budget/project period.

Disapproved Applicants

Applicants who received a score less than the recommended funding level for approval, 60 points, and were deemed to be disapproved by the ORC, will receive an Executive Summary Statement from the IHS program office within 30 days of the conclusion of the ORC outlining the weaknesses and strengths of their submitted application. The IHS program office will also provide additional contact information as needed to address questions and concerns as well as provide technical assistance if desired.

Approved But Unfunded Applicants

Approved but unfunded applicants that met the minimum scoring range and were deemed by the ORC to be ''Approved'', but were not funded due to lack of funding, will have their applications held by DGM for a period of one year. If additional funding becomes available during the course of FY 2013, the approved application may be re-considered by the awarding program office for possible funding. The applicant will also receive an Executive Summary Statement from the IHS program office within 30 days of the conclusion of the ORC.

Note: Any correspondence other than the official NoA signed by an IHS Grants Management Official announcing to the Project Director that an award has been made to their organization is not an authorization to implement their program on behalf of IHS.

2. Administrative Requirements

Grants are administered in accordance with the following regulations, policies, and Office of Management and Budget (OMB) cost principles:

A. The criteria as outlined in this Program Announcement.

B. Administrative Regulations for Grants:

- 45 CFR Part 92, Uniform Administrative Requirements for Grants and Cooperative Agreements to State, Local and Tribal Governments.
- 45 CFR Part 74, Uniform Administrative Requirements for Awards and Subawards to Institutions of Higher Education, Hospitals, and other Non-profit Organizations.

C. Grants Policy:

- HHS Grants Policy Statement, Revised 01/07.

D. Cost Principles:

- 2 CFR Part 225—Cost Principles for State, Local, and Indian Tribal Governments (OMB Circular A–87).
- 2 CFR Part 230—Cost Principles for Non-Profit Organizations (OMB Circular A–122).

E. Audit Requirements:

- OMB Circular A–133, Audits of States, Local Governments, and Non-profit Organizations.

3. Indirect Costs

This section applies to all grant recipients that request reimbursement of indirect costs (IDC) in their grant application. In accordance with HHS Grants Policy Statement, Part II–27, IHS requires applicants to obtain a current IDC rate agreement prior to award. The rate agreement must be prepared in accordance with the applicable cost principles and guidance as provided by the cognizant agency or office. A current rate covers the applicable grant activities under the current award's budget period. If the current rate is not on file with the DGM at the time of award, the IDC portion of the budget will be restricted. The restrictions remain in place until the current rate is provided to the DGM.

Generally, IDC rates for IHS grantees are negotiated with the Division of Cost Allocation (DCA) *https://rates.psc.gov/* and the Department of Interior (National Business Center) *http://www.doi.gov/ibc/services/Indirect_Cost_Services/index.cfm.* For questions regarding the indirect cost policy, please call (301) 443–5204 to request assistance.

4. Reporting Requirements

The grantee must submit required reports consistent with the applicable deadlines. Failure to submit required reports within the time allowed may result in suspension or termination of an active grant, withholding of additional awards for the project, or other enforcement actions such as withholding of payments or converting to the reimbursement method of payment. Continued failure to submit required reports may result in one or both of the following: (1) The imposition of special award provisions; and (2) the non-funding or non-award of other eligible projects or activities. This requirement applies whether the delinquency is attributable to the failure of the grantee organization or the individual responsible for preparation of the reports. Reports must be submitted electronically via GrantSolutions. Personnel responsible for submitting reports will be required to obtain a login and password for GrantSolutions. Please see the Agency Contacts list in section VII for the systems contact information.

The reporting requirements for this program are noted below.

A. Progress Reports

Program progress reports are required semi annually, within 30 days after the budget period ends. These reports must include a brief comparison of actual accomplishments to the goals established for the period, or, if applicable, provide sound justification for the lack of progress, and other pertinent information as required. A final report must be submitted within 90 days of expiration of the budget/project period.

B. Financial Reports

Federal Financial Report FFR (SF–425), Cash Transaction Reports are due

30 days after the close of every calendar quarter to the Division of Payment Management, HHS at: *http://www.dpm.psc.gov.* It is recommended that you also send a copy of your FFR (SF–425) report to your Grants Management Specialist. Failure to submit timely reports may cause a disruption in timely payments to your organization.

Grantees are responsible and accountable for accurate information being reported on all required reports: The Progress Reports and Federal Financial Report.

C. Federal Subaward Reporting System (FSRS)

This award may be subject to the Transparency Act subaward and executive compensation reporting requirements of 2 CFR part 170.

The Transparency Act requires the OMB to establish a single searchable database, accessible to the public, with information on financial assistance awards made by Federal agencies. The Transparency Act also includes a requirement for recipients of Federal grants to report information about first-tier subawards and executive compensation under Federal assistance awards.

IHS has implemented a Term of Award into all IHS Standard Terms and Conditions, NoAs and funding announcements regarding the FSRS reporting requirement. This IHS Term of Award is applicable to all IHS grant and cooperative agreements issued on or after October 1, 2010, with a $25,000 subaward obligation dollar threshold met for any specific reporting period. Additionally, all new (discretionary) IHS awards where the project period is made up of more than one budget period and where: (1) The project period start date was October 1, 2010 or after and (2) the primary awardee will have a $25,000 subaward obligation dollar threshold during any specific reporting period will be required to address the FSRS reporting. For the full IHS award term implementing this requirement and additional award applicability information, visit the Grants Management Grants Policy Web site at: *https://www.ihs.gov/dgm/index.cfm?module=dsp_dgm_policy_topics.*

Telecommunication for the hearing impaired is available at: TTY (301) 443–6394.

VII. Agency Contacts

1. Questions on the programmatic issues may be directed to: Ms. Patricia Spotted Horse, Program Analyst, Office of Direct Service and Contracting Tribes, Indian Health Service, 801 Thompson Avenue, Suite 220, Rockville, MD 20852–1609, Telephone: (301) 443–1104, Fax: (301) 443–4666, Email: *Patricia.SpottedHorse@ihs.gov.*

2. Questions on grants management and fiscal matters may be directed to: Mr. Pallop Chareonvootitam, Grants Management Specialist, Division of Grants Management, Office of Management Services, Indian Health Service, 801 Thompson Avenue, TMP Suite 360, Rockville, MD 20852–1609, Telephone: (301) 443–5204, Fax: (301) 443–9602, Email: *Pallop.Chareonvootitam@ihs.gov.*

3. Questions on systems matters may be directed to: Mr. Paul Gettys, Grant Systems Coordinator, 801 Thompson Avenue, TMP Suite 360, Rockville, MD 20852, Phone: 301–443–2114; or the DGM main line 301–443–5204, Fax: 301–443–9602, E-Mail: *Paul.Gettys@ihs.gov.*

VIII. Other Information

The Public Health Service strongly encourages all cooperative agreement and contract recipients to provide a smoke-free workplace and promote the non-use of all tobacco products. In addition, Public Law 103–227, the Pro-Children Act of 1994, prohibits smoking in certain facilities (or in some cases, any portion of the facility) in which regular or routine education, library, day care, health care, or early childhood development services are provided to children. This is consistent with the HHS mission to protect and advance the physical and mental health of the American people.

Dated: April 16, 2013.

Yvette Roubideaux,

Director, Indian Health Service.

[FR Doc. 2013–09674 Filed 4–23–13; 8:45 am]

BILLING CODE 4165–16–P

DEPARTMENT OF HEALTH AND HUMAN SERVICES

National Institutes of Health

Submission for OMB Review; 30-Day Comment Request: Women's Health Initiative Observational Study

SUMMARY: Under the provisions of Section 3507(a)(1)(D) of the Paperwork Reduction Act of 1995, the National Heart, Lung, and Blood Institute (NHLBI),0020the National Institutes of Health, has submitted to the Office of Management and Budget (OMB) a request for review and approval of the information collection listed below. This proposed information collection was previously published in the **Federal Register** on February 5, 2013 on pages 8152–8153 and allowed 60-days for public comment. One comment was received and an appropriate response was made. The purpose of this notice is to allow an additional 30 days for public comment. The NHLBI, National Institutes of Health, may not conduct or sponsor, and the respondent is not required to respond to, an information collection that has been extended, revised, or implemented on or after October 1, 1995, unless it displays a currently valid OMB control number.

Direct Comments to OMB: Written comments and/or suggestions regarding the item(s) contained in this notice, especially regarding the estimated public burden and associated response time, should be directed to the: Office of Management and Budget, Office of Regulatory Affairs, *OIRA_submission@omb.eop.gov* or by fax to 202–395–6974, Attention: NIH Desk Officer.

Comment Due Date: Comments regarding this information collection are best assured of having their full effect if received within 30 days of the date of this publication.

FOR FURTHER INFORMATION CONTACT: To obtain a copy of the data collection plans and instruments, or request more information on the proposed project contact: Shari Eason Ludlam, Project Officer, Women's Health Initiative Program Office, 6701 Rockledge Drive, 2 Rockledge Centre, Room 9188, MSC 7913, Bethesda, MD 20892–7936, or call (301) 402–2900 or Email your request, including your address to: *ludlams@mail.nih.gov*. Formal requests for additional plans and instruments must be requested in writing.

Proposed Collection: Women's Health Initiative Observational Study. Revision—OMB No. 0925–0414, Expiration Date: 07/31/2013. National Heart, Lung, and Blood Institute (NHLBI), National Institutes of Health (NIH).

Need and Use of Information Collection: This study will be used by the NIH to evaluate risk factors for chronic disease among older women by developing and following a large cohort of postmenopausal women and relating subsequent disease development to baseline assessments of historical, physical, psychosocial, and physiologic characteristics. In addition, the observational study will complement the clinical trial (which has received clinical exemption) and provide additional information on the common causes of frailty, disability and death for postmenopausal women, namely, coronary heart disease, breast and

colorectal cancer, and osteoporotic fractures. Continuation of follow-up years for ascertainment of medical history update forms will provide essential data for outcomes assessment for this population of aging women.

OMB approval is requested for 3 years. There are no costs to respondents other than their time, which is estimated at $308,218 for all respondents. The total estimated annualized burden hours are 14,022.

Type of respondent*	Number of respondents	Number of responses per response	Average burden per response (in hours)	Total annual burden hours
OS Participants	41,495	1	20/60	13,929
Next of kin	936	1	.6/60	92
Physician/Office Staff	17	1	5/60	1

* Annual burden is placed on health care providers and respondent relatives/informants through requests for information which will help in the compilation of the number and nature of new fatal and nonfatal events.

Dated: April 9, 2013.

Michael S. Lauer,

Director, Division of Cardiovascular Sciences, NHLBI, National Institutes of Health.

Dated: April 11, 2013.

Lynn W. Susulske,

Government Information Specialist, Freedom of Information and Privacy Act Branch, NHLBI, National Institutes of Health.

[FR Doc. 2013–09730 Filed 4–23–13; 8:45 am]

BILLING CODE 4140–01–P

DEPARTMENT OF HEALTH AND HUMAN SERVICES

National Institutes of Health

National Library of Medicine; Notice of Closed Meeting

Pursuant to section 10(d) of the Federal Advisory Committee Act, as amended (5 U.S.C. App), notice is hereby given of the following meeting.

The meeting will be closed to the public in accordance with the provisions set forth in sections 552b(c)(4) and 552b(c)(6), Title 5 USC, as amended. The grant applications and the discussions could disclose confidential trade secrets or commercial property such as patentable materials, and personal information concerning individuals associated with the grant applications, the disclosure of which would constitute a clearly unwarranted invasion of personal privacy.

Name of Committee: National Library of Medicine Special Emphasis Panel; Scholarly Works G13.

Date: July 11, 2013.

Time: 9:00 a.m. to 6:30 p.m.

Agenda: To review and evaluate grant applications.

Place: National Library of Medicine, 6705 Rockledge Drive, Suite 301, Bethesda, MD 20817, (Telephone Conference Call).

Contact Person: Zoe E. Huang, MD, Scientific Review Officer, Extramural Programs, National Library of Medicine, NIH, 6705 Rockledge Drive, Suite 301, Bethesda, MD 20892–7968, 301–594–4937, *huangz@mail.nih.gov.*

(Catalogue of Federal Domestic Assistance Program No. 93.879, Medical Library Assistance, National Institutes of Health, HHS)

Dated: April 18, 2013.

Michelle Trout,

Program Analyst, Office of the Federal Advisory Committee Policy.

[FR Doc. 2013–09594 Filed 4–23–13; 8:45 am]

BILLING CODE 4140–01–P

DEPARTMENT OF HEALTH AND HUMAN SERVICES

National Institutes of Health

National Library of Medicine; Notice of Closed Meeting

Pursuant to section 10(d) of the Federal Advisory Committee Act, as amended (5 U.S.C. App), notice is hereby given of the following meeting.

The meeting will be closed to the public in accordance with the provisions set forth in sections 552b(c)(4) and 552b(c)(6), Title 5 USC, as amended. The grant applications and the discussions could disclose confidential trade secrets or commercial property such as patentable materials, and personal information concerning individuals associated with the grant applications, the disclosure of which would constitute a clearly unwarranted invasion of personal privacy.

Name of Committee: National Library of Medicine Special Emphasis Panel Conflicts.

Date: June 26, 2013.

Time: 12:00 p.m. to 2:30 p.m.

Agenda: To review and evaluate grant applications.

Place: National Library of Medicine, 6705 Rockledge Drive, Suite 301, Bethesda, MD 20817, (Telephone Conference Call).

Contact Person: Zoe E. Huang, MD, Scientific Review Officer, Extramural Programs, National Library of Medicine, NIH, 6705 Rockledge Drive, Suite 301, Bethesda, MD 20892–7968, 301–594–4937, *huangz@mail.nih.gov.*

(Catalogue of Federal Domestic Assistance Program No. 93.879, Medical Library Assistance, National Institutes of Health, HHS)

Dated: April 18, 2013.

Michelle Trout,

Program Analyst, Office of the Federal Advisory Committee Policy.

[FR Doc. 2013–09593 Filed 4–23–13; 8:45 am]

BILLING CODE 4140–01–P

DEPARTMENT OF HEALTH AND HUMAN SERVICES

National Institutes of Health

National Institute of Neurological Disorders and Stroke

Pursuant to section 10(a) of the Federal Advisory Committee Act, as amended (5 U.S.C. App.), notice is hereby given of an Interagency Pain Research Coordinating Committee (IPRCC) meeting.

The meeting will feature invited speakers and discussions of Committee business items including the Federally-funded pain research portfolio, NIH peer review, new opportunities for pain research and partnerships in pain research, and an update on the development of a comprehensive population health level strategy for pain prevention, treatment, management, and research.

The meeting will be open to the public and accessible by live webcast and conference call.

Name of Committee: Interagency Pain Research Coordinating Committee.

Type of meeting: Open Meeting.

Date: June 3, 2013.

Time: 8:30 a.m. to 5:00 p.m. *Eastern Time*—Approximate end time.

Agenda: The meeting will feature invited speakers and discussions of Committee business items including the Federally-funded pain research portfolio, NIH peer review, new opportunities for pain research and partnerships in pain research, and an update on the development of a comprehensive population health level strategy for pain prevention, treatment, management, and research.

Place: National Institutes of Health, Building 31, Conference Room 10, 31 Center Drive, Bethesda, MD 20892.

Conference Call: Dial: 888–324–9651, Participant Passcode: 5124072.

Cost: The meeting is free and open to the public.

Webcast Live: http://videocast.nih.gov/.

Registration: http://iprcc.nih.gov/.

Deadlines: Notification of intent to present oral comments: Thursday, May 23, 2013, by 5:00 p.m. ET.

Submission of written/electronic statement for oral comments: Monday, May 27, 2013, by 5:00 p.m. ET.

Submission of written comments: Wednesday, May 29, 2013, by 5:00 p.m. ET.

Access: Medical Center Metro (Red Line) Visitor Information: *http://www.nih.gov/about/visitor/index.htm.*

Contact Person: Linda L. Porter, Ph.D., Health Science Policy Advisor, Officer of the Director, National Institute of Neurological Disorders and Stroke, NIH, 31 Center Drive, Room 8A03, Bethesda, MD 20892, Phone: (301) 496–9271, Email: *IPRCC PublicInquiries@mail.nih.gov.*

Please Note:

Any member of the public interested in presenting oral comments to the Committee must notify the Contact Person listed on this notice by 5:00 p.m. ET on Thursday, May 23, 2013, with their request to present oral comments at the meeting. Interested individuals and representatives of organizations must submit a written/electronic copy of the oral statement/comments including a brief description of the organization represented by 5:00 p.m. ET on Monday, May 27, 2013.

Statements submitted will become a part of the public record. Only one representative of an organization will be allowed to present oral comments on behalf of that organization, and presentations will be limited to three to five minutes per speaker, depending on number of speakers to be accommodated within the allotted time. Speakers will be assigned a time to speak in the order of the date and time when their request to speak is received, along with the required submission of the written/electronic statement by the specified deadline. If special accommodations are needed, please email the Contact Person listed above.

In addition, any interested person may submit written comments to the IPRCC prior to the meeting by sending the comments to the Contact Person listed on this notice by 5:00 p.m. ET, Wednesday, May 29, 2013. The comments should include the name and, when applicable, the business or professional affiliation of the interested person. All written comments received by the deadlines for both oral and written public comments will be provided to the IPRCC for their consideration and will become part of the public record.

The meeting will be open to the public through a conference call phone number and webcast live on the Internet. Members of the public who participate using the conference call phone number will be able to listen to the meeting but will not be heard. If you experience any technical problems with the conference call or webcast, please call Operator Service on (301) 496–4517 for conference call issues and the NIH IT Service Desk at (301) 496–4357, toll free (866) 319–4357, for webcast issues.

Individuals who participate in person or by using these electronic services and who need special assistance, such as captioning of the conference call or other reasonable accommodations, should submit a request to the Contact Person listed on this notice at least seven days prior to the meeting.

As a part of security procedures, attendees should be prepared to present a photo ID during the security process to get on the NIH campus. For a full description, please see: *http://www.nih.gov/about/visitorsecurity.htm.*

Information about the IPRCC is available on the Web site: *http://iprcc.nih.gov/*

Dated: April 18, 2013.

David Clary,

Program Analyst, Office of Federal Advisory Committee Policy.

[FR Doc. 2013–09589 Filed 4–23–13; 8:45 am]

BILLING CODE 4140–01–P

DEPARTMENT OF HEALTH AND HUMAN SERVICES

National Institutes of Health

Center for Scientific Review; Notice of Closed Meeting

Pursuant to section 10(d) of the Federal Advisory Committee Act, as amended (5 U.S.C. App.), notice is hereby given of the following meeting.

The meeting will be closed to the public in accordance with the provisions set forth in sections 552b(c)(4) and 552b(c)(6), Title 5 U.S.C., as amended. The grant applications and the discussions could disclose confidential trade secrets or commercial property such as patentable material, and personal information concerning individuals associated with the grant applications, the disclosure of which would constitute a clearly unwarranted invasion of personal privacy.

Name of Committee: Center for Scientific Review Special Emphasis Panel, Cancer Diagnostics and Treatments.

Date: May 3, 2013.

Time: 1:00 p.m. to 2:00 p.m.

Agenda: To review and evaluate grant applications.

Place: National Institutes of Health, 6701 Rockledge Drive, Bethesda, MD 20892 (Telephone Conference Call).

Contact Person: Zhang-Zhi Hu, MD, Scientific Review Officer, Center for Scientific Review, National Institutes of Health, 6701 Rockledge Drive, Room 6186, MSC 7804, Bethesda, MD 20892, (301) 594–2414, *huzhuang@csr.nih.gov.*

This notice is being published less than 15 days prior to the meeting due to the timing limitations imposed by the review and funding cycle.

(Catalogue of Federal Domestic Assistance Program Nos. 93.306, Comparative Medicine; 93.333, Clinical Research, 93.306, 93.333, 93.337, 93.393–93.396, 93.837–93.844, 93.846–93.878, 93.892, 93.893, National Institutes of Health, HHS)

Dated: April 17, 2013

David Clary,

Program Analyst, Office of Federal Advisory Committee Policy.

[FR Doc. 2013–09580 Filed 4–23–13; 8:45 am]

BILLING CODE 4140–01–P

DEPARTMENT OF HEALTH AND HUMAN SERVICES

National Institutes of Health

Center for Scientific Review; Notice of Closed Meetings

Pursuant to section 10(d) of the Federal Advisory Committee Act, as amended (5 U.S.C. App.), notice is hereby given of the following meetings.

The meetings will be closed to the public in accordance with the provisions set forth in sections 552b(c)(4) and 552b(c)(6), Title 5 U.S.C., as amended. The grant applications and the discussions could disclose confidential trade secrets or commercial property such as patentable material, and personal information concerning individuals associated with the grant applications, the disclosure of which would constitute a clearly unwarranted invasion of personal privacy.

Name of Committee: Center for Scientific Review Special Emphasis Panel; R15: Rheumatology, Skeletal Biology, Dental, Muscle, Biomaterial and Tissue Engineering.

Date: May 21–22, 2013

Time: 8:00 a.m. to 6:00 p.m.

Agenda: To review and evaluate grant applications.

Place: National Institutes of Health, 6701 Rockledge Drive, Bethesda, MD 20892, (Virtual Meeting).

Contact Person: Aruna K Behera, Ph.D., Scientific Review Officer, Center for Scientific Review, National Institutes of Health, 6701 Rockledge Drive, Room 4211, MSC 7814, Bethesda, MD 20892, 301–435–6809, *beheraak@csr.nih.gov.*

Name of Committee: Center for Scientific Review Special Emphasis Panel; RFA Panel: Investigations on Primary Immunodeficiency Diseases.

Date: May 21, 2013.

Time: 12:00 p.m. to 3:00 p.m.

Agenda: To review and evaluate grant applications

Place: National Institutes of Health, 6701 Rockledge Drive, Bethesda, MD 20892, (Virtual Meeting).

Contact Person: Scott Jakes, Ph.D., Scientific Review Officer, Center for Scientific Review, National Institutes of Health, 6701 Rockledge Drive, Room 4198, MSC 7812, Bethesda, MD 20892, 301–495–1506, *jakesse@mail.nih.gov.*

Name of Committee: Center for Scientific Review Special Emphasis Panel; RFA RM–11016: Regional Comprehensive Metabolomics Resource Cores.

Date: May 22–23, 2013.

Time: 8:30 a.m. to 5:00 p.m.

Agenda: To review and evaluate grant applications.

Place: National Institutes of Health, 6701 Rockledge Drive, Bethesda, MD 20892, (Virtual Meeting).

Contact Person: Ping Fan, MD, Ph.D., Scientific Review Officer, Center for Scientific Review, National Institutes of Health, 6701 Rockledge Drive, Room 5154, MSC 7840, Bethesda, MD 20892, 301–408–9971, *fanp@csr.nih.gov*.

Name of Committee: Center for Scientific Review Special Emphasis Panel; Mentored Research Scientist Development Award in Metabolomics.

Date: May 22, 2013.

Time: 12:00 p.m. to 4:00 p.m.

Agenda: To review and evaluate grant applications.

Place: National Institutes of Health, 6701 Rockledge Drive, Bethesda, MD 20892, (Virtual Meeting)

Contact Person: Allen Richon, Ph.D., Scientific Review Officer, Center for Scientific Review, National Institutes of Health, 6701 Rockledge Drive, Room 6184, MSC 7892, Bethesda, MD 20892, 301–435–1024, *allen.richon@nih.hhs.gov*.

(Catalogue of Federal Domestic Assistance Program Nos. 93.306, Comparative Medicine; 93.333, Clinical Research, 93.306, 93.333, 93.337, 93.393–93.396, 93.837–93.844, 93.846–93.878, 93.892, 93.893, National Institutes of Health, HHS)

Dated: April 17, 2013.

David Clary,

Program Analyst, Office of Federal Advisory Committee Policy.

[FR Doc. 2013–09579 Filed 4–23–13; 8:45 am]

BILLING CODE 4140–01–P

DEPARTMENT OF HEALTH AND HUMAN SERVICES

National Institutes of Health

National Human Genome Research Institute; Notice of Closed Meeting

Pursuant to section 10(d) of the Federal Advisory Committee Act, as amended (5 U.S.C. App.), notice is hereby given of the following meeting.

The meeting will be closed to the public in accordance with the provisions set forth in sections 552b(c)(4) and 552b(c)(6), Title 5 U.S.C., as amended. The grant applications and the discussions could disclose confidential trade secrets or commercial property such as patentable material, and personal information concerning individuals associated with the grant applications, the disclosure of which would constitute a clearly unwarranted invasion of personal privacy.

Name of Committee: National Human Genome Research Institute Initial Review Group; Genome Research Review Committee.

Date: June 6, 2013.

Time: 11:30 a.m. to 3:30 p.m.

Agenda: To review and evaluate grant applications.

Place: National Human Genome Research Institute, 3rd floor Conf. Room 3146, 5635 Fishers Lane, Rockville, MD 20892, (Telephone Conference Call).

Contact Person: Ken D. Nakamura, Ph.D., Scientific Review Officer, Office of Scientific Review, National Human Genome Research Institute, National Institutes of Health, Bethesda, MD 20892, 301 402–0838.

(Catalogue of Federal Domestic Assistance Program Nos. 93.172, Human Genome Research, National Institutes of Health, HHS)

Dated: April 18, 2013

David Clary,

Program Analyst, Office of Federal Advisory Committee Policy.

[FR Doc. 2013–09584 Filed 4–23–13; 8:45 am]

BILLING CODE 4140–01–P

DEPARTMENT OF HEALTH AND HUMAN SERVICES

National Institutes of Health

National Center for Advancing Translational Sciences; Notice of Closed Meeting

Pursuant to section 10(d) of the Federal Advisory Committee Act, as amended (5 U.S.C. App.), notice is hereby given of the following meeting.

The meeting will be closed to the public in accordance with the provisions set forth in sections 552b(c)(4) and 552b(c)(6), Title 5 U.S.C., as amended. The grant applications and the discussions could disclose confidential trade secrets or commercial property such as patentable material, and personal information concerning individuals associated with the grant applications, the disclosure of which would constitute a clearly unwarranted invasion of personal privacy.

Name of Committee: National Center for Advancing Translational Sciences Special Emphasis Panel; NIH Support for Conferences and Scientific Meetings.

Date: May 13, 2013.

Time: 8 a.m. to 5 p.m.

Agenda: To review and evaluate grant applications.

Place: National Institutes of Health, One Democracy Plaza, 6701 Democracy Boulevard, Bethesda, MD 20892.

Contact Person: Barbara J. Nelson, Ph.D., Scientific Review Officer, Office of Grants Management & Scientific Review, National Center for Advancing Translational Sciences (NCATS), National Institutes of Health, 6701 Democracy Blvd., Room 1080, 1 Dem. Plaza, Bethesda, MD 20892–4874, 301–435–0806, *nelsonbj@mail.nih.gov*.

Dated: April 18, 2013

David Clary,

Program Analyst, Office of Federal Advisory Committee Policy.

[FR Doc. 2013–09582 Filed 4–23–13; 8:45 am]

BILLING CODE 4140–01–P

DEPARTMENT OF HEALTH AND HUMAN SERVICES

National Institutes of Health

National Institute of Biomedical Imaging and Bioengineering; Notice of Closed Meeting

Pursuant to section 10(d) of the Federal Advisory Committee Act, as amended (5 U.S.C. App.), notice is hereby given of the following meeting.

The meeting will be closed to the public in accordance with the provisions set forth in sections 552b(c)(4) and 552b(c)(6), Title 5 U.S.C., as amended. The grant applications and the discussions could disclose confidential trade secrets or commercial property such as patentable material, and personal information concerning individuals associated with the grant applications, the disclosure of which would constitute a clearly unwarranted invasion of personal privacy.

Name of Committee: National Institute of Biomedical Imaging and Bioengineering Special Emphasis Panel; Center for Multiscale Simulations in the Human Circulation.

Date: June 25, 2013.

Time: 10:00 a.m. to 9:00 p.m.

Agenda: To review and evaluate grant applications.

Place: National Institutes of Health, Two Democracy Plaza, Suite 920, 6707 Democracy Boulevard, Bethesda, MD 20892, (Virtual Meeting).

Contact Person: John K. Hayes, Ph.D., Scientific Review Officer, National Institute of Biomedical Imaging and Bioengineering, National Institutes of Health, 6707 Democracy Boulevard, Room 959, Bethesda, MD 20892, 301–451–3398, *hayesj@mail.nih.gov*.

Dated: April 18, 2013.

David Clary,

Program Analyst, Office of Federal Advisory Committee Policy.

[FR Doc. 2013–09588 Filed 4–23–13; 8:45 am]

BILLING CODE 4140–01–P

DEPARTMENT OF HEALTH AND HUMAN SERVICES

National Institutes of Health

National Institute of Allergy and Infectious Diseases; Cancellation of Meeting

Notice is hereby given of the cancellation of the AIDS Research Advisory Committee, NIAID, June 05, 2013, 8:00 a.m. to June 05, 2013, 5:00 p.m., National Institutes of Health, Building 10, 10 Center Drive, FAES Academic Center, Bethesda, MD, 20892 which was published in the **Federal Register** on April 12, 2013, 78 FR 21961.

Cancelled meeting, AVRS will not be having a June meeting.

Dated: April 17, 2013.

David Clary,

Program Analyst, Office of Federal Advisory Committee Policy.

[FR Doc. 2013–09587 Filed 4–23–13; 8:45 am]

BILLING CODE 4140–01–P

DEPARTMENT OF HEALTH AND HUMAN SERVICES

National Institutes of Health

National Institute on Aging; Notice of Meeting

Pursuant to section 10(d) of the Federal Advisory Committee Act, as amended (5 U.S.C. App.), notice is hereby given of a meeting of the National Advisory Council on Aging.

The meeting will be open to the public as indicated below, with attendance limited to space available. Individuals who plan to attend and need special assistance, such as sign language interpretation or other reasonable accommodations, should notify the Contact Person listed below in advance of the meeting.

The meeting will be closed to the public in accordance with the provisions set forth in sections 552b(c)(4) and 552b(c)(6), Title 5 U.S.C., as amended. The grant applications and the discussions could disclose confidential trade secrets or commercial property such as patentable material, and personal information concerning individuals associated with the grant applications, the disclosure of which would constitute a clearly unwarranted invasion of personal privacy.

Name of Committee: National Advisory Council on Aging.

Date: June 4–5, 2013.

Closed: June 4, 2013, 3:00 p.m. to 5:00 p.m.

Agenda: To review and evaluate grant applications.

Place: National Institutes of Health, 6th Floor, C Wing, Conference Room 10, Building 31, 31 Center Drive, Bethesda, MD 20892.

Open: June 5, 2013, 8:00 a.m. to 1:30 p.m.

Agenda: Call to order and reports from the Director; Discussion of future meeting dates; Consideration of Minutes from the last meeting; Reports from the Task Force on Minority, Council of Councils, and the Working Group on Program; Council Speaker; Program Highlights.

Place: National Institutes of Health, 6th Floor, C Wing, Conference Room 10, Building 31, 31 Center Drive, Bethesda, MD 20892.

Contact Person: Robin Barr, Ph.D. Director, National Institute on Aging, Office of Extramural Activities, Gateway Building, 7201 Wisconsin Avenue, Bethesda, MD 20814, (301) 496–9322, *barrr@nia.nih.gov*.

Any interested person may file written comments with the committee by forwarding the statement to the Contact Person listed on this notice. The statement should include the name, address, telephone number and when applicable, the business or professional affiliation of the interested person.

In the interest of security, NIH has instituted stringent procedures for entrance onto the NIH campus. All visitor vehicles, including taxicabs, hotel, and airport shuttles will be inspected before being allowed on campus. Visitors will be asked to show one form of identification (for example, a government-issued photo ID, driver's license, or passport) and to state the purpose of their visit.

Information is also available on the Institute's/Center's home page: *www.nih.gov/nia/naca/*, where an agenda and any additional information for the meeting will be posted when available.

(Catalogue of Federal Domestic Assistance Program Nos. 93.866, Aging Research, National Institutes of Health, HHS)

Dated: April 18, 2013

Melanie J. Gray,

Program Analyst, Office of Federal Advisory Committee Policy.

[FR Doc. 2013–09585 Filed 4–23–13; 8:45 am]

BILLING CODE 4140–01–P

DEPARTMENT OF HEALTH AND HUMAN SERVICES

National Institutes of Health

Center for Scientific Review; Notice of Closed Meetings

Pursuant to section 10(d) of the Federal Advisory Committee Act, as amended (5 U.S.C. App.), notice is hereby given of the following meetings.

The meetings will be closed to the public in accordance with the provisions set forth in sections 552b(c)(4) and 552b(c)(6), Title 5 U.S.C., as amended. The grant applications and the discussions could disclose confidential trade secrets or commercial property such as patentable material, and personal information concerning individuals associated with the grant applications, the disclosure of which would constitute a clearly unwarranted invasion of personal privacy.

Name of Committee: Center for Scientific Review Special Emphasis Panel; Neuroendocrinology: Hormones and Cytokines.

Date: May 22, 2013.

Time: 9:00 a.m. to 5:00 p.m.

Agenda: To review and evaluate grant applications.

Place: National Institutes of Health, 6701 Rockledge Drive, Bethesda, MD 20892 (Virtual Meeting).

Contact Person: Nicholas Gaiano, Ph.D., Scientific Review Officer, Center for Scientific Review, National Institutes of Health, 6701 Rockledge Drive, Room 5178, MSC 7844, Bethesda, MD 20892–7844, 301–435–1033, *gaianonr@csr.nih.gov.*

Name of Committee: Bioengineering Sciences & Technologies Integrated Review Group; Nanotechnology Study Section.

Date: May 23–24, 2013.

Time: 8:00 a.m. to 4:00 p.m.

Agenda: To review and evaluate grant applications.

Place: Renaissance Mayflower Hotel, 1127 Connecticut Avenue NW., Washington, DC 20036.

Contact Person: James J Li, Ph.D., Scientific Review Officer, Center for Scientific Review, National Institutes of Health, 6701 Rockledge Drive, Room 5148, MSC 7849, Bethesda, MD 20892, 301–806–8065, *lijames@csr.nih.gov*.

(Catalogue of Federal Domestic Assistance Program Nos. 93.306, Comparative Medicine; 93.333, Clinical Research, 93.306, 93.333, 93.337, 93.393–93.396, 93.837–93.844, 93.846–93.878, 93.892, 93.893, National Institutes of Health, HHS)

Dated: April 18, 2013.

Carolyn A. Baum,

Program Analyst, Office of Federal Advisory Committee Policy.

[FR Doc. 2013–09581 Filed 4–23–13; 8:45 am]

BILLING CODE 4140–01–P

DEPARTMENT OF HEALTH AND HUMAN SERVICES

National Institutes of Health

National Cancer Institute; Notice of Meeting

Pursuant to section 10(a) of the Federal Advisory Committee Act, as amended (5 U.S.C. App.), notice is hereby given of a meeting of the National Cancer Institute Clinical Trials and Translational Research Advisory Committee.

The meeting will be open to the public, with attendance limited to space available. Individuals who plan to attend and need special assistance, such as sign language interpretation or other reasonable accommodations, should

notify the Contact Person listed below in advance of the meeting.

Name of Committee: National Cancer Institute Clinical Trials and Translational Research Advisory Committee.

Date: July 10, 2013.

Time: 9 a.m. to 4 p.m.

Agenda: Strategic Discussion of NCI's Clinical and Translational Research Programs.

Place: National Institutes of Health, Building 31, C-Wing, 6th Floor, Conference Room 10, 31 Center Drive, Bethesda, MD 20892.

Contact Person: Sheila A. Prindiville, MD, MPH, Director, Coordinating Center for Clinical Trials, Office of the Director, National Cancer Institute, National Institutes of Health, 6120 Executive Blvd., 3rd Floor Suite, Bethesda, MD 20892, 301–451–5048, *prindivs@mail.nih.gov*.

Information is also available on the Institute's/Center's home page: *http://deainfo.nci.nih.gov/advisory/ctac/ctac.htm*, where an agenda and any additional information for the meeting will be posted when available.

Any interested person may file written comments with the committee by forwarding the statement to the Contact Person listed on this notice. The statement should include the name, address, telephone number and when applicable, the business or professional affiliation of the interested person.

(Catalogue of Federal Domestic Assistance Program Nos. 93.392, Cancer Construction; 93.393, Cancer Cause and Prevention Research; 93.394, Cancer Detection and Diagnosis Research; 93.395, Cancer Treatment Research; 93.396, Cancer Biology Research; 93.397, Cancer Centers Support; 93.398, Cancer Research Manpower; 93.399, Cancer Control, National Institutes of Health, HHS).

Dated: April 18, 2013.

Melanie J. Gray,

Program Analyst, Office of Federal Advisory Committee Policy.

[FR Doc. 2013–09583 Filed 4–23–13; 8:45 am]

BILLING CODE 4140–01–P

DEPARTMENT OF HOMELAND SECURITY

Office of the Secretary

Exercise of Authority Under the Immigration and Nationality Act

AGENCY: Office of the Secretary, DHS.

ACTION: Notice of determination.

Authority: 8 U.S.C. 1182(d)(3)(B)(i).

Following consultations with the Secretary of State and the Attorney General, I hereby conclude, as a matter of discretion in accordance with the authority granted to me by section 212(d)(3)(B)(i) of the Immigration and Nationality Act (INA), 8 U.S.C. 1182(d)(3)(B)(i), as amended, as well as the foreign policy and national security interests deemed relevant in these consultations, that section 212(a)(3)(B) of the INA, 8 U.S.C. 1182(a)(3)(B), excluding subclause (i)(II), shall not apply with respect to an alien for any activity or association relating to the Nationalist Republican Alliance (*Alianza Republicana Nacionalista,* or ARENA), provided that the alien satisfies the relevant agency authority that the alien:

(a) Is seeking a benefit or protection under the INA and has been determined to be otherwise eligible for the benefit or protection;

(b) has undergone and passed all relevant background and security checks;

(c) has fully disclosed, to the best of his or her knowledge, in all relevant applications and interviews with U.S. government representatives and agents, the nature and circumstances of activities or association falling within the scope of section 212(a)(3)(B) of the INA, 8 U.S.C. 1182(a)(3)(B);

(d) has not participated in, or knowingly provided material support to, terrorist activities that targeted noncombatant persons or U.S. interests;

(e) has not engaged in terrorist activity in association with ARENA outside the context of civil war activities directed against military, intelligence, or related forces of the Salvadoran Government;

(f) poses no danger to the safety and security of the United States; and

(g) warrants an exemption from the relevant inadmissibility provision(s) in the totality of the circumstances.

Implementation of this determination will be made by U.S. Citizenship and Immigration Services (USCIS), in consultation with U.S. Immigration and Customs Enforcement (ICE), or by U.S. consular officers, as applicable, who shall ascertain, to their satisfaction, and in their discretion, that the particular applicant meets each of the criteria set forth above.

This exercise of authority may be revoked as a matter of discretion and without notice at any time, with respect to any and all persons subject to it. Any determination made under this exercise of authority as set out above can inform but shall not control a decision regarding any subsequent benefit or protection application, unless such exercise of authority has been revoked.

This exercise of authority shall not be construed to prejudice, in any way, the ability of the U.S. government to commence subsequent criminal or civil proceedings in accordance with U.S. law involving any beneficiary of this exercise of authority (or any other person). This exercise of authority creates no substantive or procedural right or benefit that is legally enforceable by any party against the United States or its agencies or officers or any other person.

In accordance with section 212(d)(3)(B)(ii) of the INA, 8 U.S.C. 1182(d)(3)(B)(ii), a report on the aliens to whom this exercise of authority is applied, on the basis of case-by-case decisions by the U.S. Department of Homeland Security or by the U.S. Department of State, shall be provided to the specified congressional committees not later than 90 days after the end of the fiscal year.

This determination is based on an assessment related to the national security and foreign policy interests of the United States as they apply to the particular persons described herein and shall not have any application with respect to other persons or to other provisions of U.S. law.

Janet Napolitano,

Secretary of Homeland Security.

[FR Doc. 2013–09605 Filed 4–23–13; 8:45 am]

BILLING CODE 4410–9M–P

DEPARTMENT OF HOMELAND SECURITY

Office of the Secretary

Exercise of Authority Under the Immigration and Nationality Act

AGENCY: Office of the Secretary, DHS.

ACTION: Notice of determination.

Authority: 8 U.S.C. 1182(d)(3)(B)(i).

Following consultations with the Secretary of State and the Attorney General, I hereby conclude, as a matter of discretion in accordance with the authority granted to me by section 212(d)(3)(B)(i) of the Immigration and Nationality Act (INA), 8 U.S.C. 1182(d)(3)(B)(i), as amended, as well as the foreign policy and national security interests deemed relevant in these consultations, that section 212(a)(3)(B) of the INA, 8 U.S.C. 1182(a)(3)(B), excluding subclause (i)(II), shall not apply with respect to an alien for any activity or association relating to the Farabundo Martí National Liberation Front (FMLN), provided that the alien satisfies the relevant agency authority that the alien:

(a) is seeking a benefit or protection under the INA and has been determined to be otherwise eligible for the benefit or protection;

(b) has undergone and passed all relevant background and security checks;

(c) has fully disclosed, to the best of his or her knowledge, in all relevant applications and interviews with U.S. government representatives and agents, the nature and circumstances of activities or association falling within the scope of section 212(a)(3)(B) of the INA, 8 U.S.C. 1182(a)(3)(B);

(d) has not participated in, or knowingly provided material support to, terrorist activities that targeted noncombatant persons or U.S. interests;

(e) has not engaged in terrorist activity in association with FMLN outside the context of civil war activities directed against military, intelligence, or related forces of the Salvadoran Government;

(f) poses no danger to the safety and security of the United States; and

(g) warrants an exemption from the relevant inadmissibility provision(s) in the totality of the circumstances.

Implementation of this determination will be made by U.S. Citizenship and Immigration Services (USCIS), in consultation with U.S. Immigration and Customs Enforcement (ICE), or by U.S. consular officers, as applicable, who shall ascertain, to their satisfaction, and in their discretion, that the particular applicant meets each of the criteria set forth above.

This exercise of authority may be revoked as a matter of discretion and without notice at any time, with respect to any and all persons subject to it. Any determination made under this exercise of authority as set out above can inform but shall not control a decision regarding any subsequent benefit or protection application, unless such exercise of authority has been revoked.

This exercise of authority shall not be construed to prejudice, in any way, the ability of the U.S. government to commence subsequent criminal or civil proceedings in accordance with U.S. law involving any beneficiary of this exercise of authority (or any other person). This exercise of authority creates no substantive or procedural right or benefit that is legally enforceable by any party against the United States or its agencies or officers or any other person.

In accordance with section 212(d)(3)(B)(ii) of the INA, 8 U.S.C. 1182(d)(3)(B)(ii), a report on the aliens to whom this exercise of authority is applied, on the basis of case-by-case decisions by the U.S. Department of Homeland Security or by the U.S. Department of State, shall be provided to the specified congressional committees not later than 90 days after the end of the fiscal year.

This determination is based on an assessment related to the national security and foreign policy interests of the United States as they apply to the particular persons described herein and shall not have any application with respect to other persons or to other provisions of U.S. law.

Janet Napolitano,

Secretary of Homeland Security.

[FR Doc. 2013–09606 Filed 4–23–13; 8:45 am]

BILLING CODE P

DEPARTMENT OF HOMELAND SECURITY

Federal Emergency Management Agency

[Docket ID FEMA–2013–0012; OMB No. 1660–NEW]

Agency Information Collection Activities; Proposed Collection; Comment Request: Community Drill Day Registration

AGENCY: Federal Emergency Management Agency, DHS.

ACTION: Notice; correction

On April 18, 2013 the Federal Emergency Management Agency (FEMA) published an agency information collection notice in the **Federal Register** at 78 FR 23276. In the **ADDRESSES** section, FEMA inadvertently listed the Docket ID as FEMA–2010–0012. The correct Docket ID is FEMA–2013–0012.

Dated: April 18, 2013.

Charlene D. Myrthil,

Director, Records Management Division, Mission Support Bureau, Federal Emergency Management Agency, Department of Homeland Security.

[FR Doc. 2013–09666 Filed 4–23–13; 8:45 am]

BILLING CODE 9111–27–P

DEPARTMENT OF HOMELAND SECURITY

Federal Emergency Management Agency

[Docket ID: FEMA–2013–0008; OMB No. 1660–0080]

Agency Information Collection Activities; Proposed Collection; Comment Request; Application for Surplus Federal Real Property Public Benefit Conveyance and BRAC Program for Emergency Management Use

AGENCY: Federal Emergency Management Agency, DHS.

ACTION: Notice; correction

On April 10, 2013 the Federal Emergency Management Agency (FEMA) published an agency information collection notice in the **Federal Register** at 78 FR 21385. In the **ADDRESSES** section, FEMA inadvertently listed the Docket ID as FEMA–2013–XXXX. The correct Docket ID is FEMA–2013–0008.

Dated: April 18, 2013.

Charlene D. Myrthil,

Director, Records Management Division, Mission Support Bureau, Federal Emergency Management Agency, Department of Homeland Security.

[FR Doc. 2013–09661 Filed 4–23–13; 8:45 am]

BILLING CODE 9111–19–P

DEPARTMENT OF HOMELAND SECURITY

Federal Emergency Management Agency

[Docket ID: FEMA–2013–0009; OMB No. 1660–0100]

Agency Information Collection Activities: Proposed Collection; Comment Request

AGENCY: Federal Emergency Management Agency, DHS.

ACTION: Notice; correction.

On April 4, 2013 the Federal Emergency Management Agency (FEMA) published an agency information collection notice in the **Federal Register** at 78 FR 20330. In the **ADDRESSES** section, FEMA inadvertently listed the Docket ID as FEMA–2010–XXXX. The correct Docket ID is FEMA–2013–0009.

Dated: April 18, 2013.

Charlene D. Myrthil,

Director, Records Management Division, Mission Support Bureau, Federal Emergency Management Agency, Department of Homeland Security.

[FR Doc. 2013–09667 Filed 4–23–13; 8:45 am]

BILLING CODE 9111–72–P

DEPARTMENT OF HOUSING AND URBAN DEVELOPMENT

[Docket No. FR–5687–N–22]

Notice of Proposed Information Collection: Comment Request; FHA TOTAL (Technology Open to Approved Lenders) Mortgage Scorecard

AGENCY: Office of the Assistant Secretary for Housing, HUD.

ACTION: Notice.

SUMMARY: The proposed information collection requirement described below will be submitted to the Office of Management and Budget (OMB) for review, as required by the Paperwork Reduction Act. HUD is soliciting public comments on the subject proposal.

DATES: *Comments Due Date:* June 24, 2013.

ADDRESSES: Interested persons are invited to submit comments regarding this proposal. Comments should refer to the proposal by name and/or OMB Control Number and should be sent to: Reports Liaison Officer, Department of Housing and Urban Development, 451 7th Street SW., Washington, DC 20410, Room 9120 or the number for the Federal Information Service (1–800–877–8339).

FOR FURTHER INFORMATION CONTACT: Karin B. Hill, Director, Office of Single Family Program Development, Department of Housing and Urban Development, 451 7th Street SW., Washington, DC 20410, telephone (202) 708–2121 (this is not a toll free number) for copies of the proposed forms and other available information.

SUPPLEMENTARY INFORMATION: HUD is submitting the proposed information collection to OMB for review, as required by the Paperwork Reduction Act of 1995 (44 U.S.C. Chapter 35, as amended).

This Notice is soliciting comments from members of the public and affected agencies concerning the proposed collection of information to: (1) Evaluate whether the proposed collection is necessary for the proper performance of the functions of the agency, including whether the information will have practical utility; (2) Evaluate the accuracy of the agency's estimate of the burden of the proposed collection of information; (3) Enhance the quality, utility, and clarity of the information to be collected; and (4) Minimize the burden of the collection of information on those who are to respond; including the use of appropriate automated collection techniques or other forms of information technology, e.g., permitting electronic submission of responses.

This Notice also lists the following information:

Title of Proposal: FHA TOTAL Mortgage Scorecard.

OMB Control Number, if applicable: 2502–0556.

Description of the need for the information and proposed use: The regulation mandating this collection can be found in the Code of Federal Regulations at 24 CFR 203.255(b)(5). This information is necessary to assure that lenders (and automated underwriting system (AUS) vendors) are aware of their obligations regarding use of the TOTAL Mortgage Scorecard and are certifying that they will comply with all pertinent regulations. It also allows FHA to request reports from lenders regarding their use of the scorecard, that they have implemented appropriate quality control procedures for using the scorecard, and provides an appeal mechanism should FHA take an action to terminate a lender's use of the scorecard.

Agency form numbers, if applicable: N/A.

Estimation of the total numbers of hours needed to prepare the information collection including number of respondents, frequency of response, and hours of response: The number of burden hours is 908.0. The number of respondents is 12,000, the number of responses is 452, the frequency of response is on occasion, and the burden hour per response is .464.

Status of the proposed information collection: This is an extension of currently approved collection.

Authority: The Paperwork Reduction Act of 1995, 44 U.S.C., Chapter 35, as amended.

Dated: April 19, 2013.

Laura M. Marin,

Acting General Deputy Assistant Secretary for Housing-Acting General Deputy Federal Housing Commissioner.

[FR Doc. 2013–09704 Filed 4–23–13; 8:45 am]

BILLING CODE 4210–67–P

DEPARTMENT OF HOUSING AND URBAN DEVELOPMENT

[Docket No. FR–5687–N–20]

Notice of Proposed Information Collection; Comment Request: Real Estate Settlement Procedures Act (RESPA) Disclosures

AGENCY: Office of the Assistant Secretary for Housing-Federal Housing Commissioner, HUD.

ACTION: Notice.

SUMMARY: The proposed information collection requirement described below will be submitted to the Office of Management and Budget (OMB) for review, as required by the Paperwork Reduction Act. HUD is soliciting public comments on the subject proposal.

DATES: *Comments Due Date:* June 24, 2013.

ADDRESSES: Interested persons are invited to submit comments regarding this proposal. Comments should refer to the proposal by name and/or OMB Control Number and should be sent to: Reports Liaison Officer, Department of Housing and Urban Development, 451 7th Street SW., Washington, DC 20410, Room 9120 or the number for the Federal Relay Service (1–800–877–8339).

FOR FURTHER INFORMATION CONTACT: Colette Pollard, Office of Chief Information Officer, Department of Housing and Urban Development, 451 7th Street SW., Washington, DC 20410, telephone (202) 708–2121 (this is not a toll free number) for copies of the proposed forms and other available information.

SUPPLEMENTARY INFORMATION: HUD is submitting the proposed information collection to OMB for review, as required by the Paperwork Reduction Act of 1995 (44 U.S.C. Chapter 35, as amended).

This Notice is soliciting comments from members of the public and affected agencies concerning the proposed collection of information to: (1) Evaluate whether the proposed collection is necessary for the proper performance of the functions of the agency, including whether the information will have practical utility; (2) Evaluate the accuracy of the agency's estimate of the burden of the proposed collection of information; (3) Enhance the quality, utility, and clarity of the information to be collected; and (4) Minimize the burden of the collection of information on those who are to respond; including the use of appropriate automated collection techniques or other forms of information technology, e.g., permitting electronic submission of responses.

This Notice also lists the following information:

Title of Proposal: Real Estate Settlement Procedures Act (RESPA) Disclosures.

OMB Control Number, if applicable: 2502–0265.

Description of the need for the information and proposed use: The Real Estate Settlement Procedures Act of 1974, (RESPA), 12 U.S.C. 2601 *et. seq.,* and Regulation X, codified at 24 CFR part 3500, require real estate settlement service providers to give homebuyers certain disclosure information at and before settlement, and pursuant to the servicing of the loan and escrow account. This includes a Special Information Booklet, a Good Faith Estimate, a Servicing Disclosure Statement, the Form HUD–1 or Form HUD–1A, and when applicable an Initial Escrow Account Statement, an Annual Escrow Account Statement, a Consumer Disclosure for Voluntary Escrow Account Payments, an Affiliated Business Arrangement Disclosure, and a Servicing Transfer Disclosure. Under

the Dodd-Frank Wall Street Reform and Consumer Protection Act (Dodd-Frank Act), rulemaking authority for and certain enforcement authorities with respect to the Real Estate Settlement Procedures Act (RESPA) of 1974, as amended by Section 461 of the Housing and Urban-Rural Recovery Act of 1983 (HURRA), and other various amendments, transferred from the Department of Housing and Urban Development (HUD) to the Consumer Financial Protection Bureau (CFPB) on July 21, 2011. The Dodd-Frank Act also directed the CFPB to integrate certain disclosures required by the Truth in Lending Act (TILA) with certain disclosures required by the Real Estate Settlement Procedures Act (RESPA) of 1974. The CFPB expects the content and format of information collection forms under this clearance, HUD's existing HUD–1/1A and GFE forms, to be significantly revised or replaced by rulemaking. The CFPB published proposed rules in July and August of 2012 to that effect.

Historically, in order to satisfy information collection requirements under the Paperwork Reduction Act (PRA), the HUD–1/1A and GFE listed HUD's Office of Management and Budget (OMB) control number, 2502–0265. While the CFPB will be, upon OMB approval of this information collection request, the ''owner'' of this information collection, the CFPB believes that requiring covered persons to modify existing forms solely to replace HUD's OMB control number with the Bureau's OMB control number would impose substantial burden on covered persons with limited or no net benefit to consumers. Accordingly, the CFPB has reached an agreement with OMB and HUD whereby covered persons may continue to list HUD's OMB control number on the HUD–1/1A and GFE forms until a final rule to the contrary takes effect. Covered persons also have the option of replacing HUD's OMB control number with the Bureau's OMB control number on the HUD–1/1A and GFE forms until a final rule to the contrary takes effect. Once the CFPB's final rule takes effect, regulated industry will no longer be able to use the HUD control number.

Agency form numbers, if applicable: HUD–1 and HUD–1A, and GFE.

Estimation of the total numbers of hours needed to prepare the information collection including number of respondents, frequency of response, and hours of response: The total number of annual burden hours needed to prepare the information is 17,183,450; the number of respondents is estimated to be 50,000 generating approximately 149,589,500 responses annually; these are third party disclosures, the frequency of response is annually for one disclosure and as required for others; and the estimated time per response varies from 2 minutes to 35 minutes.

Authority: The Paperwork Reduction Act of 1995, 44 U.S.C. Chapter 35, as amended.

Status of the proposed information collection: This is an extension of a currently approved collection.

Authority: The Paperwork Reduction Act of 1995, 44 U.S.C. chapter 35, as amended.

Dated: April 19, 2013.

Laura M. Marin,

Acting General Deputy Assistant, Secretary for Housing-Acting General Deputy, Federal Housing Commissioner.

[FR Doc. 2013–09705 Filed 4–23–13; 8:45 am]

BILLING CODE 4210–67–P

DEPARTMENT OF THE INTERIOR

Fish and Wildlife Service

[FWS–R6–R–2013–N061; FF06R06000 134 FXRS1265066CCP0]

Lake Andes National Wildlife Refuge Complex, Lake Andes, SD; Final Comprehensive Conservation Plan

AGENCY: Fish and Wildlife Service, Interior.

ACTION: Notice of availability.

SUMMARY: We, the U.S. Fish and Wildlife Service (Service), announce that our final comprehensive conservation plan and finding of no significant impact (FONSI) for the Lake Andes National Wildlife Refuge Complex (Complex), which includes Lake Andes NWR, Karl E. Mundt NWR, and Lake Andes Wetland Management District, is available. This final plan describes how the Service intends to manage these units for the next 15 years.

ADDRESSES: A copy of the plan may be obtained by any of the following methods. You may request hard copies or a CD–ROM of the plan.

- *Email: bernardo_garza@fws.gov.* Include ''Lake Andes NWR Complex Draft CCP and EA'' in the subject line of the message.
- *Fax:* Attn: Bernardo Garza, 303–236–4792.
- *U.S. Mail:* U.S. Fish and Wildlife Service, Division of Refuge Planning, P.O. Box 25486, Denver Federal Center, Denver, CO 80225.
- *In-Person Pickup:* Call 303–236–4377 to make an appointment during regular business hours at 134 Union Boulevard, Suite 300, Lakewood, CO 80228.

FOR FURTHER INFORMATION CONTACT: Bernardo Garza, 303–236–4377, (phone); *bernardo_garza@fws.gov* (email).

SUPPLEMENTARY INFORMATION:

Introduction

The Complex encompasses three distinct units: Lake Andes National Wildlife Refuge (NWR), Lake Andes Wetland Management District (WMD), and Karl E. Mundt NWR. The Complex lies within the Plains and Prairie Potholes Region (Region) in South Dakota, which is an ecological treasure of biological importance for wildlife, particularly waterfowl and other migratory birds. This Region alone produces approximately 50 percent of the continent's waterfowl population. Hunting and wildlife observation are the two most prevalent public uses on the Complex.

Lake Andes NWR was authorized by an Executive Order in 1936, and formally established in 1939, to preserve an important piece of shallow-water and prairie habitats for waterfowl and other water birds.

Lake Andes WMD was formed in the 1960s to protect wetland and grassland habitat that is critical to our nation's duck population. The Complex manages lands located within Aurora, Bon Homme, Brule, Charles Mix, Clay, Davison, Douglas, Hanson, Hutchinson, Lincoln, Turner, Union and Yankton Counties in southeastern South Dakota. These lands include a variety of grassland.

Karl E. Mundt NWR was established in 1974 to protect an area hugging the eastern bank of the Missouri River in Gregory County, South Dakota, and Boyd County, Nebraska, that was supporting nearly 300 endangered bald eagles each winter. It is the first national wildlife refuge specifically established for the conservation of bald eagles, and its riparian forests, prairie, and upland habitats provide important resting, feeding, breeding, and nesting sites for a wide array of neotropical migratory birds, indigenous turkey, and white-tailed deer. Haying, grazing, prescribed burning, invasive plant control, and prairie restoration are used to maintain riparian and upland habitats. Cottonwoods and other native tree species have been planted in the past to anchor riverine banks in attempts to safeguard important bald eagle roosting sites.

The draft Plan and Environmental Assessment (EA) was made available to the public for review and comment following the announcement in the **Federal Register** on October 29, 2012

(77 FR 65574). The public was given 30 days to comment. Six individuals and groups provided comments, and appropriate changes were made to the final Plan based on substantive comments. The draft Plan and Environmental Assessment identified and evaluated four alternatives for managing the refuge complex for the next 15 years. Alternative B (the proposed action submitted by the planning team) was selected by the Regional Director as the preferred alternative, and will serve as the final Plan.

The final Plan identifies goals, objectives, and strategies that describe the future management of all three units of the Lake Andes National Wildlife Refuge Complex. Alternative B, the preferred alternative, acknowledges the importance of naturally functioning ecological communities on the refuge. However, changes to the landscape (e.g., human alterations to the landscape and past refuge management that created wetlands) prevent managing the refuge solely as a naturally functioning ecological community. Because some of these changes are significant, some refuge habitats will require ''hands-on'' management actions during the life of this Plan, while others will be restored. Refuge habitats will continue to be managed utilizing prescriptive cattle grazing, prescribed fire, and a combination of cropping and native vegetation seeding to restore native prairie. Management of the refuge complex will emphasize developing and implementing an improved, science-based priority system to restore prairie habitats for the benefit of waterfowl, State and federally listed species, migratory birds, and other native wildlife.

The refuge complex staff will focus on high-priority lands and, when possible, on lower-priority parcels. The focus is to restore ecological processes and native grassland species to the greatest extent possible within the parameters of available resources and existing constraints. The staff of the refuge complex staff will maintain and in some cases expand the existing levels and quality of hunting, fishing, wildlife observation, photography, and environmental education and interpretation programs. The refuge complex staff will continue to work with local groups and agencies to improve the quality, and augment the quantity of Lake Andes' water. The refuge complex staff will continue to work with the Corps of Engineers and National Park Service local staffs to ensure protection of bald eagle and other migratory bird roosting and nesting sites from erosion along the banks of the Missouri River in the Karl E. Mundt National Wildlife Refuge. Mechanical, biological, and chemical treatments will be used to control invasive plant species. Monitoring and documenting the response to management actions will be greatly expanded. Additional habitat and wildlife objectives will be clearly stated in step down management plans to be completed as this plan is implemented.

The Service is furnishing this notice to advise other agencies and the public of the availability of the final Plan, to provide information on the desired conditions for the refuge, and to detail how the Service will implement management strategies. Based on the review and evaluation of the information contained in the EA, the Regional Director has determined that implementation of the Final Plan does not constitute a major Federal action that would significantly affect the quality of the human environment within the meaning of Section 102(2)(c) of the National Environmental Policy Act. Therefore, an Environmental Impact Statement will not be prepared.

Dated: March 28, 2013.

Matt Hogan,

Deputy Regional Director, Mountain-Prairie Region, U.S. Fish and Wildlife Service.

[FR Doc. 2013–09657 Filed 4–23–13; 8:45 am]

BILLING CODE 4310–55–P

DEPARTMENT OF THE INTERIOR

Bureau of Indian Affairs

[134A2100DD.AAK4004601.A0N5A2020]

Renewal of Agency Information Collection for Grazing Permits

AGENCY: Bureau of Indian Affairs, Interior.

ACTION: Notice of request for comments.

SUMMARY: In compliance with the Paperwork Reduction Act of 1995, the Bureau of Indian Affairs is seeking comments on the renewal of Office of Management and Budget (OMB) approval for the collection of information for Grazing Permits authorized by OMB Control Number 1076–0157. This information collection expires July 31, 2013.

DATES: Submit comments on or before June 24, 2013.

ADDRESSES: You may submit comments on the information collection to David Edington, Office of Trust Services, 1849 C Street NW., Mail Stop 4637 MIB, Washington, DC 20240; facsimile: (202) 219–0006; email: *David.Edington@bia.gov*.

FOR FURTHER INFORMATION CONTACT: David Edington, (202) 513–0886.

SUPPLEMENTARY INFORMATION:

I. Abstract

The Bureau of Indian Affairs (BIA) is seeking renewal of the approval for the information collection conducted under 25 CFR 166, Grazing Permits, related to grazing on tribal land, individually-owned Indian land, or government land. This information collection allows BIA to obtain the information necessary to determine whether an applicant is eligible to acquire, modify, or assign a grazing permit on trust or restricted lands and to allow a successful applicant to meet bonding requirements. Some of this information is collected on forms.

II. Request for Comments

The Bureau of Indian Affairs requests your comments on this collection concerning: (a) The necessity of this information collection for the proper performance of the functions of the agency, including whether the information will have practical utility; (b) The accuracy of the agency's estimate of the burden (hours and cost) of the collection of information, including the validity of the methodology and assumptions used; (c) Ways to enhance the quality, utility, and clarity of the information collected; and (d) Ways to minimize the burden of collecting information from respondents.

Please note that an agency may not conduct or sponsor, and an individual need not respond to, a collection of information unless it displays a valid OMB Control Number.

It is our policy to make all comments available to the public for review at the location listed in the **ADDRESSES** section. Before including your address, phone number, email address or other personal identifying information in your comment, you should be aware that your entire comment—including your personal identifying information—may be made publicly available at any time. While you can ask us in your comment to withhold your personal identifying information from public review, we cannot guarantee that we will be able to do so.

III. Data

OMB Control Number: 1076–0157.

Title: Grazing Permits, 25 CFR 166.

Brief Description of Collection: Submission of this information allows individuals or organizations to acquire

or modify a grazing permit on tribal land, individually-owned Indian land, or government land and to meet bonding requirements. Some of this information is collected on the following forms: Form 5–5423—Performance Bond, Form 5–5514—Bid for Grazing Privileges, Form 5–5516—Grazing Permit for Organized Tribes, Form 5–5517—Free Grazing Permit, Form 5–5519—Cash Penal Bond, Form 5–5520—Power of Attorney, Form 5–5521—Certificate and Application for On-and-Off Grazing Permit, Form 5522—Modification of Grazing Permit, Form 5–5523—Assignment of Grazing Permit, Form 5–5524—Application for Allocation of Grazing Privileges, Form 5–5528—Livestock Crossing Permit, and Form 5–5529—Removable Range Improvement Records. Response is required to obtain or retain a benefit.

The following forms: Form 5–5515—Grazing Permit, Form 5–5525—Authority to Grant Grazing Privileges on Allotted Lands, and Form 5–5527—Stock Counting Record, are still in use but not considered to be an information collection as the program has determined the information for these forms to be available from other forms, found in existing records, or generated by BIA staff.

Type of Review: Revision of currently approved collection.

Respondents: Tribes, tribal organizations, individual Indians, and non-Indian individuals and entities.

Number of Respondents: 1,490 individual Indian allottee landowners, tribes, tribal organizations, and other individuals and entities.

Number of Responses: 1,490.

Estimated Time per Response: 20 minutes.

Estimated Total Annual Hour Burden: 497 hours.

Dated: April 18, 2013.

John Ashley,

Acting Assistant Director for Information Resources.

[FR Doc. 2013–09731 Filed 4–23–13; 8:45 am]

BILLING CODE 4310–4J–P

DEPARTMENT OF THE INTERIOR

Bureau of Land Management

[LLWY920000.L14300000.FR0000; WYW–81394]

Notice of Realty Action: Recreation and Public Purposes Act Classification of Public Lands in Sweetwater County, WY

AGENCY: Bureau of Land Management, Interior.

ACTION: Notice.

SUMMARY: The Bureau of Land Management (BLM) has examined and found suitable for classification for conveyance under the provisions of the Recreation and Public Purposes (R&PP) Act, as amended, approximately 120 acres of public land in Sweetwater County, Wyoming. The Sweetwater County Solid Waste District #2 (SCSWD2) proposes to use the land as the Wamsutter Landfill.

DATES: Interested parties may submit comments regarding the proposed conveyance or classification of the lands until June 10, 2013.

ADDRESSES: Send written comments to the Field Manager, Rawlins Field Office, 1300 North Third Street, Rawlins, WY 82301.

FOR FURTHER INFORMATION CONTACT: Dennis Carpenter, Field Manager, Bureau of Land Management, Rawlins Field Office, at 307–328–4201. Persons who use a telecommunications device for the deaf (TDD) may call the Federal Information Relay Service (FIRS) at 1–800–877–8339 to contact the above individual during normal business hours. The FIRS is available 24 hours a day, 7 days a week, to leave a message or question with the above individual. You will receive a reply during normal business hours.

SUPPLEMENTARY INFORMATION: In accordance with Section 7 of the Taylor Grazing Act, (43 U.S.C. 315f), and Executive Order No. 6910, the following described public land in Sweetwater County, Wyoming, has been examined and found suitable for classification for conveyance under the provisions of the R&PP Act, as amended, (43 U.S.C. 869 *et seq.*):

Sixth Principal Meridian, Wyoming

T. 19 N., R. 94 W.,
Sec. 14, N½NE¼, N½S½NE¼.

The land described contains 120.00 acres, more or less.

The following described public land was previously classified for lease only under the R&PP Act on December 14, 1983, and has been leased to the SCSWD2 as the Wamsutter Landfill since July 31, 1984:

Sixth Principal Meridian, Wyoming

T. 19 N., R. 94 W.,
Sec. 14, SE¼NW¼NE¼, NE¼SW¼NE¼, NW¼SE¼NE¼, SW¼NE¼NE¼.

The land described contains 40 acres, more or less.

In accordance with the R&PP Act, the SCSWD2 filed an application for the purchase of the above-described 120 acres of public land, which includes the existing 40 acre lease above, to be developed as the Wamsutter Landfill. The additional 80 acres is to be used for future expansion. Additional detailed information pertaining to this application, plan of development, and site plan is in case file WYW–81394, located in the BLM Rawlins Field Office at the above address.

The land is not needed for any Federal purpose. The conveyance is consistent with the Rawlins Resource Management Plan dated December 2008, and would be in the public interest. The patent, when issued, will be subject to the provisions of the R&PP Act and applicable regulations of the Secretary of the Interior, including, but not limited to the provisions at 43 CFR part 2743, and will contain the following reservations to the United States:

1. A right-of-way thereon for ditches or canals constructed by the authority of the United States, Act of August 30, 1890 (43 U.S.C. 945); and

2. All minerals, together with the right to prospect for, mine, and remove such deposits from the same under applicable law and such regulations as the Secretary of the Interior may prescribe.

The patent will be subject to all valid existing rights documented on the official public land records at the time of patent issuance.

On April 24, 2013, the land described above will be segregated from all other forms of appropriation under the public land laws, including the general mining laws, except for conveyance under the R&PP Act, leasing under the mineral leasing laws, and disposals under the mineral material disposal laws.

Classification Comments

Interested parties may submit comments involving the suitability of the land for a landfill. Comments on the classification are restricted to whether the land is physically suited for the proposal, whether the use will maximize the future use or uses of the land, whether the use is consistent with local planning and zoning, or if the use is consistent with State and Federal programs.

Application Comments

Interested parties may submit comments regarding the specific use proposed in the application and plan of development, whether the BLM followed proper administrative procedures in reaching the decision to convey under the R&PP Act, or any other factor not directly related to the suitability of the land for R&PP use.

Confidentiality of Comments

Interested parties may submit written comments to the BLM Rawlins Field Manager at the address above. Comments, including names and street addresses of respondents, will be available for public review at the BLM Rawlins Field Office during regular business hours. Before including your address, phone number, email address, or other personal identifying information in your comment, you should be aware that your entire comment—including your personal identifying information—may be made publicly available at any time. While you may ask us in your comment to withhold your personal identifying information from public review, we cannot guarantee that we will be able to do so.

Any adverse comments will be reviewed by the State Director. In the absence of any adverse comments, the classification of the land described in this notice will become effective June 24, 2013. The lands will not be available for conveyance until after the classification becomes effective.

Authority: 43 CFR part 2740.

Donald A. Simpson,

State Director, Wyoming.

[FR Doc. 2013–09668 Filed 4–23–13; 8:45 am]

BILLING CODE 4310–22–P

DEPARTMENT OF THE INTERIOR

Bureau of Land Management

[LLORM070.L63100000. EU0000.13XL1116AF; OR–67105;HAG13–0126]

Notice of Realty Action: Proposed Direct Sale of Public Land in Josephine County, Oregon

AGENCY: Bureau of Land Management, Interior.

ACTION: Notice of realty action.

SUMMARY: The Bureau of Land Management (BLM) proposes to sell a 0.66-acre parcel of public land in Josephine County, Oregon, by direct sale procedures to Joan Conklin for the approved appraised fair market value of $300.

DATES: Comments regarding the proposed sale must be received by the BLM on or before June 10, 2013.

ADDRESSES: Written comments concerning this proposed sale may be submitted to Grants Pass Field Manager, Grants Pass Interagency Office, 2164 NE. Spalding Ave, Grants Pass, OR 97526.

FOR FURTHER INFORMATION CONTACT: Tanya Dent, Realty Specialist, at 3040 Biddle Road, Medford, OR 97504 or phone 541–618–2477. Persons who use a telecommunications device for the deaf (TDD) may call the Federal Information Relay Service (FIRS) at 1–800–877–8339 to contact the above individual during normal business hours. The FIRS is available 24 hours a day, 7 days a week, to leave a message or question with the above individual. You will receive a reply during normal business hours.

SUPPLEMENTARY INFORMATION: Pursuant to Sections 203 and 209 of the Federal Land Policy and Management Act of 1976 (FLPMA), as amended (43 U.S.C. 1713 and 1719) and regulations at 43 CFR subparts 2710 and 2720, this conveyance will be made by direct sale procedures to Joan Conklin to resolve an inadvertent occupancy trespass that has been in existence since 1999 for the land described as follows:

Willamette Meridian, Oregon

T. 34 S., R. 5 W.,
Sec. 30, lots 5, 7 and 8.
Containing 0.66 acre, more or less.

The disposals of these lands are in conformance with the 1995 BLM Medford District Resource Management Plan as amended on August 2, 2002. Due to the location of the unintentional encroachments, the parcel is difficult and uneconomic to manage as public land. The BLM is proposing a direct sale of the 0.66 acre parcel which is the smallest legal subdivision that would wholly encompass the improvements that have been in existence on the parcel since 1999. A direct sale is appropriate because the corner of the residential house is located on this parcel. The public interest would be best served by disposing of this parcel to the occupant by direct sale. The disposal parcel contains no known mineral, geothermal or oil/gas values, and the mineral interests will be conveyed with the sale of the land. Conveyance of the identified public land will be subject to all valid existing rights of record and contain the following terms, conditions, and reservations.

a. A reservation of a right-of-way to the United States for ditches and canals constructed by the authority of the United States under the Act of August 30, 1890 (43 U.S.C. 945); and

b. An appropriate indemnification clause protecting the United States from claims arising out of the patentee's use, occupancy, or operation on the patented lands.

On April 24, 2013, the above described land will be segregated from appropriation under the public land laws, including the mining laws, except the sale provisions of FLPMA. Until completion of the sale, the BLM is no longer accepting land use applications affecting the identified public land. The temporary segregation effect will terminate upon issuance of a conveyance document, publication in the **Federal Register** of a termination of the segregation, or April 24, 2015, unless extended by the BLM Oregon/Washington State Director in accordance with 43 CFR 2711.1–2(d) prior to the termination date. Detailed information concerning the proposed land sale including the appraisal, planning and environmental documents, and mineral report are available for review at the BLM Medford District Office, 3040 Biddle Road, Medford, OR 97504. Normal business hours are 7:45 a.m. to 4:30 p.m., Monday through Friday, except Federal holidays.

Public comments regarding the proposed sale may be submitted in writing to the BLM Grants Pass Resource Area Field Manager (see **ADDRESSES** section) on or before June 10, 2013. Comments received by telephone or in electronic form, such as email or facsimile, will not be considered. Any adverse comments regarding the proposed sale will be reviewed by the BLM Oregon/Washington State Director or other authorized official of the Department of the Interior, who may sustain, vacate, or modify this realty action in whole or in part. In the absence of timely filed objections, this realty action will become the final determination of the Department of the Interior not less than 60 days from April 24, 2013.

Before including your address, phone number, email address, or other personal identifying information in your comment; you should be aware that your entire comment—including your personal identifying information—may be made publicly available at any time. While you can ask us in your comment to withhold your personal identifying information from public review, we cannot guarantee that we will be able to do so.

(Authorities: 43 CFR 2710, 2711 and 2720.)

Allen Bollschweiler,

Field Manager, Grants Pass Resource Area.

[FR Doc. 2013–09669 Filed 4–23–13; 8:45 am]

BILLING CODE 4310–33–P

DEPARTMENT OF THE INTERIOR

National Park Service

[NPS–AKR–DENA–11706; PPAKAKROZ4, PPMPSAS1Y.YP0000]

Record of Decision for the Denali Park Road Final Vehicle Management Plan and Environmental Impact Statement for Denali National Park and Preserve

AGENCY: National Park Service, Interior.

ACTION: Notice of availability.

SUMMARY: Pursuant to the National Environmental Policy Act of 1969 (NEPA), 42 U.S.C. 4332(2)(C), the National Park Service (NPS) announces the availability of a Record of Decision (ROD) for the Vehicle Management Plan and Environmental Impact Statement for Denali National Park and Preserve. The Vehicle Management Plan addresses management of all motorized vehicles on the restricted section of the Denali Park Road (Mile 15–Mile 90). This plan amends the vehicle management aspect of the park's General Management Plan (GMP). The NPS will propose a modification to the current park-specific regulations in order to implement these amendments. The NPS selected Alternative D (NPS Preferred Alternative), which offers visitors the opportunity to have a high-quality experience using a transportation system that offers predictability, efficiency, and variety. The ROD details the background of the project, the decision made (selected alternative), other alternatives considered, the basis for the decision, the environmentally preferable alternative, measures adopted to minimize environmental harm, and public involvement in the decision making process.

ADDRESSES: Copies of the ROD will be available in an electronic format online at the NPS Planning, Environmental and Public Comment Web site at *http://parkplanning.nps.gov/dena.* Hard copies and compact discs of the plan/FEIS are available on request by contacting: Miriam Valentine, Chief of Planning, Denali National Park and Preserve, P.O. Box 9, Denali Park, Alaska, 99755, or by telephone at (907) 733–9102.

FOR FURTHER INFORMATION CONTACT: Miriam Valentine, Chief of Planning, Denali National Park and Preserve, P.O. Box 9, Denali Park, Alaska 99755, or by telephone at (907) 733–9102.

SUPPLEMENTARY INFORMATION: Vehicle management on the Denali Park Road, the primary means of access into Denali National Park and Preserve, has been based on a GMP from 1986 and the Entrance Area and Road Corridor Development Plan (a GMP amendment) completed in 1997.

The purpose of this Vehicle Management Plan is to provide specific direction for improved vehicle management on the restricted section of the Denali Park Road for approximately the next 20 years. The plan describes how the NPS will manage vehicle use on the Park Road in order to provide visitors with an opportunity for a high-quality experience while protecting wilderness resources and values, scenic values, wildlife, and other park resources; and maintaining the unique character of the Park Road.

The Notice of Availability for the draft plan/environmental impact statement was published in the **Federal Register** on August 1, 2011 (FR 45848). Public meetings were held in Denali Park (August 23, 2011); Fairbanks (August 31, 2011); and Anchorage (September 7, 2011). Approximately 61 people attended the meetings. Additionally, park staff were invited by stakeholder groups to discuss the draft plan at their regular meetings. Park staff attended and presented at approximately six stakeholder meetings.

The initial 60-day public comment period, August 1 through September 30, 2011, was extended to October 31, 2011, in response to numerous requests from the public and organizations. 324 pieces of correspondence were received, containing 889 comments, during the 90-day comment period.

A preferred alternative was not identified in the draft plan to allow for refinement of the existing alternatives based on public input. The preferred alternative in the final plan addresses many of the comments and concerns that were received on the draft plan. The Notice of Availability for the final plan/environmental impact statement was published in the **Federal Register** on July 29, 2012 (FR 39253).

The NPS selected Alternative D (NPS Preferred Alternative). With the implementation of this alternative the number of vehicles, their schedules, and behavior will be managed to meet visitor demand while maintaining standards for desired resource conditions and visitor experience. Several times each season, key indicators will be monitored to assess the success of current traffic levels, behavior, and patterns to determine whether the set standards are being met.

Comprehensive monitoring will also be conducted at regular intervals to specifically address the impacts of traffic on wildlife, wilderness, and the visitor experience. A Before-After Control Impact (BACI) study will be conducted within the first five years of the plan's implementation to affirm the selection of key indicators and to distinguish impacts due to changes in current traffic patterns and traffic levels. Data from long-term inventory and monitoring programs may also be used to evaluate whether changes in the resource condition are occurring.

In addition to managing for desired conditions, the maximum level of vehicle use on the restricted section of the Park Road will be 160 vehicles per 24-hour period. This limit includes all motor vehicles counted westbound at the Savage River Check Station. The 160-vehicle limit is derived from traffic model simulation results and extensive scientific research on visitor preferences and resource condition.

Dated: February 14, 2013.

Joel L. Hard,

Deputy Regional Director, Alaska.

[FR Doc. 2013–09675 Filed 4–23–13; 8:45 am]

BILLING CODE 4310–EF–P

DEPARTMENT OF THE INTERIOR

National Park Service

[NPS–WASO–NRNHL–12729; PPWOCRADI0, PCU00RP14.R50000]

National Register of Historic Places; Notification of Pending Nominations and Related Actions

Nominations for the following properties being considered for listing or related actions in the National Register were received by the National Park Service before March 30, 2013. Pursuant to section 60.13 of 36 CFR part 60, written comments are being accepted concerning the significance of the nominated properties under the National Register criteria for evaluation. Comments may be forwarded by United States Postal Service, to the National Register of Historic Places, National Park Service, 1849 C St. NW., MS 2280, Washington, DC 20240; by all other carriers, National Register of Historic Places, National Park Service, 1201 Eye St. NW., 8th floor, Washington, DC 20005; or by fax, 202–371–6447. Written or faxed comments should be submitted by May 9, 2013. Before including your address, phone number, email address, or other personal identifying information in your comment, you should be aware that your entire comment—including your personal identifying information—may be made publicly available at any time.

While you can ask us in your comment to withhold your personal

identifying information from public review, we cannot guarantee that we will be able to do so.

Dated: April 2, 2013.

J. Paul Loether,

Chief, National Register of Historic Places/ National Historic Landmarks Program.

GEORGIA

Coffee County

63rd Army Air Forces Contract Pilot School (Primary), 2700 S. Peterson Ave., Douglas, 13000270

Jones County

James, Lemuel and Mary House, 153 James Rd., James, 13000271

Thomas County

Hopkins, Judge Henry William and Francesca, House, 229 Remington Ave., Thomasville, 13000272

IOWA

Linn County

Sokol Gymnasium, 417 3rd St. SE., Cedar Rapids, 13000274

Wapello County

Administration Building, U.S. Naval Air Station Ottumwa, Terminal Ave., Ottumwa, 13000273

LOUISIANA

Ouachita Parish

Ouachita Coca-Cola Bottling Company, Inc.—Ouachita Candy Company, Inc., 215 Walnut St., Monroe, 13000275

NEBRASKA

Douglas County

Olson's Market, 6115 Maple St., Omaha, 13000276

TEXAS

Wood County

Carlock, Marcus DeWitt, House, 407 S. Main St., Winnsboro, 13000277

WASHINGTON

King County

1600 East John Street Apartments, 1600 E. John St., Seattle, 13000278

Chiarelli, James and Pat, House, 843 NE. 100th St., Seattle, 13000279

[FR Doc. 2013–09607 Filed 4–23–13; 8:45 am]

BILLING CODE 4312–51–P

INTERNATIONAL TRADE COMMISSION

[Investigation No. 337–TA–830]

Certain Dimmable Compact Fluorescent Lamps and Products Containing Same: Notice of Institution of Consolidated Formal Enforcement and Modification Proceedings

AGENCY: U.S. International Trade Commission.

ACTION: Notice.

SUMMARY: Notice is hereby given that the U.S. International Trade Commission has instituted consolidated formal enforcement and modification proceedings relating to the July 25, 2012 consent order issued in the above-captioned investigation.

FOR FURTHER INFORMATION CONTACT: Jia Chen, Office of the General Counsel, U.S. International Trade Commission, 500 E Street SW., Washington, DC 20436, telephone (202) 708–4737. Copies of non-confidential documents filed in connection with this investigation are or will be available for inspection during official business hours (8:45 a.m. to 5:15 p.m.) in the Office of the Secretary, U.S. International Trade Commission, 500 E Street SW., Washington, DC 20436, telephone (202) 205–2000. General information concerning the Commission may also be obtained by accessing its Internet server at *http://www.usitc.gov.* The public record for this investigation may be viewed on the Commission's electronic docket (EDIS) at *http://edis.usitc.gov.* Hearing-impaired persons are advised that information on this matter can be obtained by contacting the Commission's TDD terminal on (202) 205–1810.

SUPPLEMENTARY INFORMATION: The Commission instituted this investigation on February 27, 2012, based on a complaint filed by Andrzej Bobel and Neptun Light, Inc., both of Lake Forest, Illinois. 77 FR11587 (Feb. 27, 2012). The complaint alleged violations of section 337 of the Tariff Act of 1930 (19 U.S.C. 1337) by reason of infringement of various claims of United States Patent Nos. 5,434,480 (''the '480 patent'') and 8,035,318. The complaint named several respondents, including MaxLite, Inc. (''MaxLite'') of Fairfield, New Jersey. The complaint alleged, among other things, that the importation into the United States, the sale for importation, and the sale within the United States after importation of certain dimmable compact fluorescent lamps (''CFLs'') and products containing the same by MaxLite violate section 337 by reason of infringement of claim 9 of the '480 patent. On July 25, 2012, the Commission terminated the investigation with respect to MaxLite and entered a consent order preventing MaxLite from importing dimmable CFLs that infringe claim 9 of '480 patent.

On February 6, 2013, MaxLite petitioned the Commission under Commission Rule 210.76 for modification of the consent order on the basis of a recent decision by the U.S. District Court for the Northern District of Illinois that dimmable CFLs purchased by MaxLite from a certain third party are subject to a covenant not to sue and thus do not infringe claim 9 of the '480 patent. On February 18, 2013, complainants filed a complaint requesting that the Commission institute a formal enforcement proceeding under Commission Rule 210.75(b) to investigate a violation of the consent order. Complainants request that the Commission institute a formal enforcement proceeding pursuant to 19 CFR 210.75, to confirm the violations of the July 25, 2012, consent order. On March 1, 2013, complainants filed an amended complaint.

Having examined the enforcement complaint, as amended, and the petition for modification, the Commission has determined to institute consolidated formal enforcement and modification proceedings to determine whether MaxLite is in violation of the July 25, 2012, consent order issued in the investigation, what, if any, enforcement measures are appropriate, and whether to modify the consent order. The following entities are named as parties to the consolidated proceedings: (1) Complainants Andrzej Bobel and Neptun Light, Inc.; (2) respondent MaxLite; and (3) the Office of Unfair Import Investigations.

The authority for the Commission's determination is contained in section 337 of the Tariff Act of 1930, as amended (19 U.S.C. 1337), and in sections 210.75–76 of the Commission's Rules of Practice and Procedure (19 CFR 210.75–76).

Issued: April 12, 2013.

By order of the Commission.

Lisa R. Barton,

Secretary to the Commission.

[FR Doc. 2013–09596 Filed 4–23–13; 8:45 am]

BILLING CODE 7020–02–P

INTERNATIONAL TRADE COMMISSION

[Investigation No. 337–TA–819]

Certain Semiconductor Chips With DRAM Circuitry, and Modules and Products Containing Same; Notice of Request for Statements on the Public Interest

AGENCY: U.S. International Trade Commission.

ACTION: Notice.

SUMMARY: Notice is hereby given that the presiding administrative law judge has issued a Final Initial Determination and Recommended Determination on Remedy and Bonding in the above-captioned investigation. The Commission is soliciting comments on public interest issues raised by the recommended relief, which is a limited exclusion order barring the entry of unlicensed DRAM semiconductor chips manufactured by Nanya Technology Corporation of TaoYuan, Taiwan, or Nanya Technology Corporation, U.S.A. of Santa Clara, California, that infringe certain patents asserted in the above-captioned investigation.

FOR FURTHER INFORMATION CONTACT: Clark S. Cheney, Office of the General Counsel, U.S. International Trade Commission, 500 E Street SW., Washington, DC 20436, telephone (202) 205–2661. The public version of the complaint can be accessed on the Commission's electronic docket (EDIS) at *http://edis.usitc.gov*, and will be available for inspection during official business hours (8:45 a.m. to 5:15 p.m.) in the Office of the Secretary, U.S. International Trade Commission, 500 E Street SW., Washington, DC 20436, telephone (202) 205–2000.

General information concerning the Commission may also be obtained by accessing its Internet server (*http://www.usitc.gov*). The public record for this investigation may be viewed on the Commission's electronic docket (EDIS) at *http://edis.usitc.gov*. Hearing-impaired persons are advised that information on this matter can be obtained by contacting the Commission's TDD terminal on (202) 205–1810.

SUPPLEMENTARY INFORMATION: Section 337 of the Tariff Act of 1930 provides that if the Commission finds a violation it shall exclude the articles concerned from the United States:

unless, after considering the effect of such exclusion upon the public health and welfare, competitive conditions in the United States economy, the production of like or directly competitive articles in the United States, and United States consumers, it finds that such articles should not be excluded from entry.

19 U.S.C. 1337(d)(1). A similar provision applies to cease and desist orders. 19 U.S.C. 1337(f)(1).

The Commission is interested in further development of the record on the public interest in these investigations. Accordingly, members of the public are invited to file submissions of no more than five (5) pages, inclusive of attachments, concerning the public interest in light of the administrative law judge's Recommended Determination on Remedy and Bonding issued in this investigation on September 14, 2012. Comments should address whether issuance of a limited exclusion order in this investigation would affect the public health and welfare in the United States, competitive conditions in the United States economy, the production of like or directly competitive articles in the United States, or United States consumers.

In particular, the Commission is interested in comments that:

(i) Explain how the articles potentially subject to the recommended orders are used in the United States;

(ii) identify any public health, safety, or welfare concerns in the United States relating to the recommended orders;

(iii) identify like or directly competitive articles that complainant, its licensees, or third parties make in the United States which could replace the subject articles if they were to be excluded;

(iv) indicate whether complainant, complainant's licensees, and/or third party suppliers have the capacity to replace the volume of articles potentially subject to the recommended exclusion order and/or a cease and desist order within a commercially reasonable time; and

(v) explain how the limited exclusion order would impact consumers in the United States.

Written submissions must be filed no later than by close of business on May 3, 2013.

Persons filing written submissions must file the original document electronically on or before the deadlines stated above and submit 8 true paper copies to the Office of the Secretary by noon the next day pursuant to section 210.4(f) of the Commission's Rules of Practice and Procedure (19 CFR 210.4(f)). Submissions should refer to the investigation number (''Inv. No. 794'') in a prominent place on the cover page and/or the first page. (*See* Handbook for Electronic Filing Procedures, *http://www.usitc.gov/secretary/fed_reg_notices/rules/handbook_on_electronic_filing.pdf*). Persons with questions regarding filing should contact the Secretary, (202) 205–2000.

Any person desiring to submit a document to the Commission in confidence must request confidential treatment. All such requests should be directed to the Secretary to the Commission and must include a full statement of the reasons why the Commission should grant such treatment. *See* 19 CFR 201.6. Documents for which confidential treatment by the Commission is properly sought will be treated accordingly. A redacted non-confidential version of the document must also be filed simultaneously with the any confidential filing. All non-confidential written submissions will be available for public inspection at the Office of the Secretary and on EDIS.

This action is taken under the authority of section 337 of the Tariff Act of 1930, as amended (19 U.S.C. 1337), and of sections 201.10 and 210.50 of the Commission's Rules of Practice and Procedure (19 CFR 201.10, 210.50).

Issued: April 19, 2013.

By order of the Commission.

Lisa R. Barton,

Acting Secretary to the Commission.

[FR Doc. 2013–09686 Filed 4–23–13; 8:45 am]

BILLING CODE 7020–02–P

DEPARTMENT OF LABOR

Office of the Secretary

Agency Information Collection Activities; Submission for OMB Review; Comment Request; Personal Protective Equipment Standard for General Industry

ACTION: Notice.

SUMMARY: The Department of Labor (DOL) is submitting the Occupational Safety and Health Administration (OSHA) sponsored information collection request (ICR) titled, ''Personal Protective Equipment Standard for General Industry,'' to the Office of Management and Budget (OMB) for review and approval for continued use in accordance with the Paperwork Reduction Act (PRA) of 1995 (44 U.S.C. 3501 et seq.).

DATES: Submit comments on or before May 24, 2013.

ADDRESSES: A copy of this ICR with applicable supporting documentation; including a description of the likely respondents, proposed frequency of response, and estimated total burden

may be obtained from the *RegInfo.gov* Web site, *http://www.reginfo.gov/public/do/PRAMain*, on the day following publication of this notice or by contacting Michel Smyth by telephone at 202–693–4129 (this is not a toll-free number) or sending an email to *DOL_PRA_PUBLIC@dol.gov*.

Submit comments about this request to the Office of Information and Regulatory Affairs, Attn: OMB Desk Officer for DOL–OSHA, Office of Management and Budget, Room 10235, 725 17th Street NW., Washington, DC 20503, Fax: 202–395–6881 (this is not a toll-free number), email: *OIRA_submission@omb.eop.gov*.

FOR FURTHER INFORMATION CONTACT: Michel Smyth by telephone at 202–693–4129 (this is not a toll-free number) or by email at *DOL_PRA_PUBLIC@dol.gov*.

Authority: 44 U.S.C. 3507(a)(1)(D).

SUPPLEMENTARY INFORMATION: Regulations 29 CFR part 1910, subpart I requires that personal protective equipment (PPE)—including equipment for eyes, face, head, and extremities; protective clothing; respiratory devices; and protective shields and barriers—be provided, used, and maintained in a sanitary and reliable condition wherever it is necessary by reason of hazards of processes or environment, chemical hazards, radiological hazards, or mechanical irritants encountered in a manner capable of causing injury or impairment in the function of any part of the body through absorption, inhalation or physical contact. This ICR covers hazard assessment and verification records and record disclosure during inspections.

This information collection is subject to the PRA. A Federal agency generally cannot conduct or sponsor a collection of information, and the public is generally not required to respond to an information collection, unless it is approved by the OMB under the PRA and displays a currently valid OMB Control Number. In addition, notwithstanding any other provisions of law, no person shall generally be subject to penalty for failing to comply with a collection of information that does not display a valid Control Number. *See* 5 CFR 1320.5(a) and 1320.6. The DOL obtains OMB approval for this information collection under Control Number 1218–0205. The current approval is scheduled to expire on April 30, 2013; however, it should be noted that existing information collection requirements submitted to the OMB receive a month-to-month extension while they undergo review. For additional information, see the related notice published in the **Federal Register** on January 30, 2013 (78 FR 6352).

Interested parties are encouraged to send comments to the OMB, Office of Information and Regulatory Affairs at the address shown in the **ADDRESSES** section within 30 days of publication of this notice in the **Federal Register**. In order to help ensure appropriate consideration, comments should mention OMB Control Number 1218–0205. The OMB is particularly interested in comments that:

- Evaluate whether the proposed collection of information is necessary for the proper performance of the functions of the agency, including whether the information will have practical utility;
- Evaluate the accuracy of the agency's estimate of the burden of the proposed collection of information, including the validity of the methodology and assumptions used;
- Enhance the quality, utility, and clarity of the information to be collected; and
- Minimize the burden of the collection of information on those who are to respond, including through the use of appropriate automated, electronic, mechanical, or other technological collection techniques or other forms of information technology, e.g., permitting electronic submission of responses.

Agency: DOL–OSHA.

Title of Collection: Personal Protective Equipment Standard for General Industry.

OMB Control Number: 1218–0205.

Affected Public: Private Sector—businesses or other for-profits.

Total Estimated Number of Respondents: 3,500,000.

Total Estimated Number of Responses: 979,020.

Total Estimated Annual Burden Hours: 4,696,991.

Total Estimated Annual Other Costs Burden: $0.

Dated: April 16, 2013.

Michel Smyth,

Departmental Clearance Officer.

[FR Doc. 2013–09620 Filed 4–23–13; 8:45 am]

BILLING CODE 4510–26–P

DEPARTMENT OF LABOR

Employee Benefits Security Administration

166th Meeting of the Advisory Council on Employee Welfare and Pension Benefit Plans; Notice of Meeting

Pursuant to the authority contained in Section 512 of the Employee Retirement Income Security Act of 1974 (ERISA), 29 U.S.C. 1142, the 166th open meeting of the Advisory Council on Employee Welfare and Pension Benefit Plans (also known as the ERISA Advisory Council) will be held on June 4–6, 2013.

The three-day meeting will take place at the U.S. Department of Labor, 200 Constitution Avenue NW., Washington, DC 20210. On June 4, the meeting will take place in Room N4437. On June 5–6, the meeting will take place in C5521 Room 4. The meeting will run from 9:00 a.m. to approximately 5:30 p.m. on June 4–5 and from 8:30 a.m. to 5 p.m. on June 6, with a one hour break for lunch each day. The purpose of the open meeting is for Advisory Council members to hear testimony from invited witnesses and to receive an update from the Employee Benefits Security Administration (EBSA). The EBSA update is scheduled for the afternoon of June 4, subject to change.

The Advisory Council will study the following issues: (1) Locating Missing and Lost Participants, (2) Private Sector Pension De-risking and Participant Protections, and (3) Successful Retirement Plan Communications for Various Population Segments. The schedule for testimony and discussion of these issues generally will be one issue per day in the order noted above. Descriptions of these topics are available on the Advisory Council page of the EBSA Web site, at *www.dol.gov/ebsa/aboutebsa/erisa_advisory_council.html.*

Organizations or members of the public wishing to submit a written statement may do so by submitting 30 copies on or before May 24, 2013 to Larry Good, Executive Secretary, ERISA Advisory Council, U.S. Department of Labor, Suite N–5623, 200 Constitution Avenue NW., Washington, DC 20210. Statements also may be submitted as email attachments in text or pdf format transmitted to *good.larry@dol.gov*. It is requested that statements not be included in the body of the email. Statements deemed relevant by the Advisory Council and received on or before May 24 will be included in the record of the meeting and made available in the EBSA Public Disclosure Room, along with witness statements. Do not include any personally identifiable information (such as name, address, or other contact information) or confidential business information that you do not want publicly disclosed. Written statements submitted by invited witnesses will be posted on the Advisory Council page of the EBSA Web site, without change, and can be retrieved by most Internet search engines.

Individuals or representatives of organizations wishing to address the Advisory Council should forward their requests to the Executive Secretary or telephone (202) 693–8668. Oral presentations will be limited to 10 minutes, time permitting, but an extended statement may be submitted for the record. Individuals with disabilities who need special accommodations should contact the Executive Secretary by May 24.

Signed at Washington, DC this 17th day of April, 2013.

Phyllis C. Borzi,

Assistant Secretary, Employee Benefits Security Administration.

[FR Doc. 2013–09595 Filed 4–23–13; 8:45 am]

BILLING CODE 4510–29–P

DEPARTMENT OF LABOR

Employment and Training Administration

Notice of Availability of Funds and Solicitation for Grant Applications for Cooperative Agreements Under the Disability Employment Initiative

AGENCY: Employment and Training Administration, Labor.

ACTION: Notice of Solicitation for Grant Applications (SGA).

Funding Opportunity Number: SGA/DFA PY 12–08.

SUMMARY: The Employment and Training Administration (ETA), in coordination with Department of Labor's (the Department or DOL) Office of Disability Employment Policy, announces the availability of approximately $18 million for a fourth round of cooperative agreements to state agencies that administer the Workforce Investment Act (WIA) of 1998. The Department expects to use this funding to award four (4) to eight (8) cooperative agreements to help states develop and implement plans for improving effective and meaningful participation of persons with disabilities in the workforce. These cooperative agreements will have a three (3) years and four (4) months period of performance. All job seekers and workers, including those with disabilities, will continue to have access to WIA-funded services through the public workforce system.

The complete SGA and any subsequent SGA amendments in connection with this solicitation are described in further detail on ETA's Web site at *http://www.doleta.gov/grants/* or on *http://www.grants.gov.* The Web sites provide application information, eligibility requirements, review and selection procedures, and other program requirements governing this solicitation.

DATES: The closing date for receipt of applications under this announcement is June 4, 2013. Applications must be received no later than 4:00:00 p.m. Eastern Time.

FOR FURTHER INFORMATION CONTACT: Eileen Banks, 200 Constitution Avenue NW., Room N–4716, Washington, DC 20210; Telephone: 202–693–3403.

Signed April 16, 2013 in Washington, DC.

Donna Kelly,

Grant Officer, Employment and Training Administration.

[FR Doc. 2013–09560 Filed 4–23–13; 8:45 am]

BILLING CODE 4510–FN–P

DEPARTMENT OF LABOR

Employment and Training Administration

Notice of Availability of Funds and Solicitation for Grant Applications for Trade Adjustment Assistance Community College and Career Training Grants

AGENCY: Employment and Training Administration, Labor.

ACTION: Notice of Solicitation for Grant Applications.

Funding Opportunity Number: SGA/DFA PY–12–10.

SUMMARY: The U.S. Department of Labor (the Department) announces the availability of approximately $474 million in grant funds to be awarded under the Trade Adjustment Assistance Community College and Career Training (TAACCCT) grant program. The TAACCCT grant program provides eligible institutions of higher education, as defined in section 102 of the Higher Education Act of 1965 (20 U.S.C. 1002), with funds to expand and improve their ability to deliver education and career training programs that can be completed in two years or less, and are suited for workers who are eligible for training under the Trade Adjustment Assistance (TAA) for Workers Program (''TAA-eligible workers'') of chapter 2 of title II of the Trade Act of 1974, 19 U.S.C. 2271–2323, as well as other adults. Eligible institutions may be located in the 50 States, the District of Columbia, Puerto Rico or the U.S. territories; however, the competitiveness of institutions in the U.S. territories for this Solicitation for Grant Applications (SGA) may be impacted by their limited opportunity to serve TAA-eligible workers. The primary intent of the TAACCCT program is to meet the educational or career training needs of workers who have lost their jobs or are threatened with job loss as a result of foreign trade by funding the expansion and improvement of education and career training programs that are suited for these individuals; however, the Department expects that a wide range of individuals will benefit from the TAACCCT program once education and training programs are developed and implemented.

The Department intends to fund grants to single institution applicants ranging from $2,372,500 to $2.75 million, totaling up to $150 million. This allows the Department to award 54–63 grants to single institutions, potentially funding more than one per state. The Department will award grants up to $25 million to single-state or multi-state consortium applicants, up to approximately $324 million in total awards, which propose programs that impact TAA-eligible workers and other adults across a state, region or regions, industry sector or cluster of related industries.

The complete SGA and any subsequent SGA amendments in connection with this solicitation are described in further detail on ETA's Web site at *http://www.doleta.gov/grants/* or on *http://www.grants.gov.* The Web sites provide application information, eligibility requirements, review and selection procedures, and other program requirements governing this solicitation.

DATES: The closing date for receipt of applications under this announcement is June 18, 2013 for single applicants and July 3, 2013 for consortium applicants. Applications must be received no later than 4:00:00 p.m. Eastern Time.

FOR FURTHER INFORMATION CONTACT: Melissa Abdullah, 200 Constitution Avenue NW., Room N–4716, Washington, DC 20210; Telephone: 202–693–3346.

Signed April 17, 2013 in Washington, DC.

Eric D. Luetkenhaus,

Grant Officer, Employment and Training Administration.

[FR Doc. 2013–09561 Filed 4–23–13; 8:45 am]

BILLING CODE 4510–FN–P

DEPARTMENT OF LABOR

Bureau of Labor Statistics

Data Users Advisory Committee; Notice of Meeting and Agenda

The Bureau of Labor Statistics Data Users Advisory Committee will meet on

Tuesday, May 7, 2013. The meeting will be held in the Postal Square Building, 2 Massachusetts Avenue NE.; Washington, DC.

One item has been added to the end of the agenda.

The Committee provides advice to the Bureau of Labor Statistics from the points of view of data users from various sectors of the U.S. economy, including the labor, business, research, academic, and government communities, on technical matters related to the collection, analysis, dissemination, and use of the Bureau's statistics, on its published reports, and on the broader aspects of its overall mission and function.

The meeting will be held in Meeting Rooms 1, 2, and 3 of the Postal Square Building Conference Center. The schedule and agenda for the meeting are as follows:

8:30 a.m. Registration
9:00 a.m. Commissioner's welcome and review of agency developments
10:00 a.m. Occupational Requirements Survey—What are the options for data presentation?
11:15 a.m. Geographic Display of Data
1:30 p.m. Outreach Efforts at BLS
- BLS Speaker's Page and Trending News—Identifying Interesting and Timely Topics for Public Presentation
- EA&I and Local Outreach—Customizing Local Data

3:00 p.m. A new approach to developing and presenting occupational replacement needs
4:15 p.m. Meeting wrap-up

The meeting is open to the public. Any questions concerning the meeting should be directed to Kathy Mele, Data Users Advisory Committee, on 202.691.6102. Individuals who require special accommodations should contact Ms. Mele at least two days prior to the meeting date.

Signed at Washington, DC, this 18th day of April 2013.

Eric P. Molina,

Acting Chief, Division of Management Systems, Bureau of Labor Statistics.

[FR Doc. 2013–09621 Filed 4–23–13; 8:45 am]

BILLING CODE 4510–24–P

DEPARTMENT OF LABOR

Occupational Safety and Health Administration

[Docket No. OSHA–2013–0006]

Advisory Committee on Construction Safety and Health (ACCSH)

AGENCY: Occupational Safety and Health Administration (OSHA), Labor.

ACTION: Announcement of a meeting of ACCSH.

SUMMARY: ACCSH will meet May 23–24, 2013, in Washington, DC.

DATES:

ACCSH meeting: ACCSH will meet from 10:00 a.m. to 1:00 p.m., e.t., Thursday, May 23, 2013, and Friday, May 24, 2013.

Written comments, requests to speak, speaker presentations, and requests for special accommodation: You must submit (postmark, send, transmit) comments, requests to address the ACCSH meeting, speaker presentations (written or electronic), and requests for special accommodations for the ACCSH meeting by May 16, 2013.

ADDRESSES:

ACCSH meeting: ACCSH will meet in Room C–5521, U.S. Department of Labor, 200 Constitution Avenue NW., Washington, DC 20210.

Submission of comments, requests to speak, and speaker presentations: You may submit comments, requests to speak at the ACCSH meeting, and speaker presentations using one of the following methods:

Electronically: You may submit materials, including attachments, electronically at *http://www.regulations.gov,* which is the Federal eRulemaking Portal. Follow the on-line instructions for submissions.

Facsimile (Fax): If your submission, including attachments, does not exceed 10 pages, you may fax it to the OSHA Docket Office at (202) 693–1648.

Regular mail, express mail, hand delivery, or messenger (courier) service: You may submit your materials to the OSHA Docket Office, Docket No. OSHA–2013–0006, Room N–2625, U.S. Department of Labor, 200 Constitution Avenue NW., Washington, DC 20210; telephone (202) 693–2350 (TTY (877) 889–5627). OSHA's Docket Office accepts deliveries (hand deliveries, express mail, and messenger service) during normal business hours, 8:15 a.m.–4:45 p.m., e.t., weekdays.

Requests for special accommodations: Please submit your request for special accommodations to attend the ACCSH meeting to Ms. Frances Owens, OSHA, Office of Communications, Room N–3647, U.S. Department of Labor, 200 Constitution Avenue NW., Washington, DC 20210; telephone (202) 693–1999; email *owens.frances@dol.gov.*

Instructions: Your submissions must include the agency name and docket number for this **Federal Register** notice (Docket No. OSHA–2013–0006). Due to security-related procedures, submissions by regular mail may experience significant delays. Please contact the OSHA Docket Office for information about security procedures for making submissions. For additional information on submitting comments, requests to speak, and speaker presentations, see the **SUPPLEMENTARY INFORMATION** section of this notice.

OSHA will post comments, requests to speak, and speaker presentations, including any personal information you provide, without change, at *http://www.regulations.gov.* Therefore, OSHA cautions you about submitting personal information such as Social Security numbers and birthdates.

FOR FURTHER INFORMATION CONTACT:

For press inquiries: Mr. Frank Meilinger, Director, OSHA Office of Communications, Room N–3647, U.S. Department of Labor, 200 Constitution Avenue NW., Washington, DC 20210; telephone (202) 693–1999; email *meilinger.francis2@dol.gov.*

For general information about ACCSH and ACCSH meetings: Mr. Damon Bonneau, OSHA, Directorate of Construction, Room N–3468, U.S. Department of Labor, 200 Constitution Avenue NW., Washington, DC 20210; telephone (202) 693–2020; email *bonneau.damon@dol.gov.*

SUPPLEMENTARY INFORMATION:

ACCSH Meeting

ACCSH will meet May 23–24, 2013, in Washington, DC. Some ACCSH members will attend the meeting by teleconference. The meeting is open to the public.

ACCSH advises the Secretary of Labor and Assistant Secretary of Labor for Occupational Safety and Health (Assistant Secretary) in the formulation of standards affecting the construction industry, and on policy matters arising in the administration of the safety and health provisions under the Contract Work Hours and Safety Standards Act (Construction Safety Act (CSA)) (40 U.S.C. 3701 *et seq.*) and the Occupational Safety and Health Act of 1970 (29 U.S.C. 651 *et seq.*) (see also 29 CFR 1911.10 and 1912.3). The OSH Act and CSA also require that OSHA consult with ACCSH before the Agency proposes any occupational safety and health standard affecting construction activities (29 CFR 1911.10; 40 U.S.C. 3704).

The tentative agenda for this meeting includes:

- Assistant Secretary's Agency update and remarks;
- Directorate of Construction update on rulemaking projects;
- ACCSH's consideration of, and recommendations on, the following OSHA proposed rules affecting construction activities:

○ The following six items from the proposed Standards Improvement Project IV:

—Alternatives to the decompression tables in subpart S—Underground Construction, Caissons, Cofferdams and Compressed Air;

—Update the incorporation by reference of the Manual of Uniform Traffic Control Devices (MUCTD) to the 2009 edition;

—Revise the construction personal protective equipment standards to make clear the requirement that equipment must fit each employee;

—Remove the requirement for certification of training in subpart M—Fall Protection;

—Remove requirements for chest x-rays in certain health standards, such as cadmium and inorganic arsenic, that may affect construction employees;

—Permit digital storage of x-rays (not just film);

○ Technical amendments and corrections to the Cranes and Derricks standards (29 CFR part 1926, subpart CC) (these amendments and corrections are in addition to those ACCSH considered at the March 18, 2013, ACCSH meeting);

○ Occupational Exposure to Beryllium;

• Discussion of the draft Federal Agency Procurement Construction, Health and Safety Checklist;

• Discussion of the 2-hour introduction to the OSHA 10-hour and 30-hour training courses; and

• Public comment period.

OSHA transcribes ACCSH meetings and prepares detailed minutes of meetings. OSHA places the transcript and minutes in the public docket for the meeting. The docket also includes speaker presentations, comments, and other materials submitted to ACCSH.

Public Participation, Submissions, and Access to Public Record

ACCSH meetings: All ACCSH meetings are open to the public. Individuals attending meetings at the U.S. Department of Labor must enter the building at the visitors' entrance, 3rd and C Streets NW., and pass through building security. Attendees must have valid government-issued photo identification (such as a driver's license) to enter the building. For additional information about building security measures for attending ACCSH meetings, please contact Ms. Owens (see **ADDRESSES** section).

Individuals needing special accommodations to attend the ACCSH meeting should contact to Ms. Owens.

Submission of written comments: You may submit comments using one of the methods in the **ADDRESSES** section. Your submissions must include the Agency name and docket number for this ACCSH meeting (Docket No. OSHA–2013–0006). OSHA will provide copies of submissions to ACCSH members.

Because of security-related procedures, submissions by regular mail may experience significant delays. For information about security procedures for submitting materials by hand delivery, express mail, and messenger or courier service, please contact the OSHA Docket Office (see **ADDRESSES** section).

Requests to speak and speaker presentations: If you want to address ACCSH at the meeting you must submit your request to speak, as well as any written or electronic presentation, by May 16, 2013, using one of the methods listed in the **ADDRESSES** section. Your request must state:

• The amount of time requested to speak;

• The interest you represent (e.g., business, organization, affiliation), if any; and

• A brief outline of the presentation.

PowerPoint presentations and other electronic materials must be compatible with PowerPoint 2010 and other Microsoft Office 2010 formats.

The ACCSH Chair may grant requests to address ACCSH as time and circumstances permit.

Public docket of the ACCSH meeting: OSHA places comments, requests to speak, and speaker presentations, including any personal information you provide, in the public docket of this ACCSH meeting without change, and those documents may be available online at *http://www.regulations.gov.* Therefore, OSHA cautions you about submitting personal information such as Social Security numbers and birthdates.

OSHA also places in the public docket the meeting transcript, meeting minutes, documents presented at the ACCSH meeting, and other documents pertaining to the ACCSH meeting. These documents also are available online at *http://www.regulations.gov.*

Access to the public record of ACCSH meetings: To read or download documents in the public docket of this ACCSH meeting, go to Docket No. OSHA–2013–0006 at *http://www.regulations.gov.* The *http://www.regulations.gov* index also lists all documents in the public record for this meeting; however, some documents (*e.g.,* copyrighted materials) are not publicly available through that Web page. All documents in the public record, including materials not available through *http://www.regulations.gov,* are available for inspection and copying in the OSHA Docket Office (see **ADDRESSES** section). Please contact the OSHA Docket Office for assistance in making submissions to, or obtaining materials from, the public docket.

Electronic copies of this **Federal Register** notice are available at *http://www.regulations.gov.* This notice, as well as news releases and other relevant information, also are available on the OSHA Web page at *http://www.osha.gov.*

Authority and Signature

David Michaels, Ph.D., MPH, Assistant Secretary of Labor for Occupational Safety and Health, authorized the preparation of this notice under the authority granted by 29 U.S.C. 656; 40 U.S.C. 3704; 5 U.S.C. App. 2; 29 CFR parts 1911 and 1912; 41 CFR part 102; and Secretary of Labor's Order No. 1–2012 (77 FR 3912).

Signed at Washington, DC on April 19, 2013.

David Michaels,

Assistant Secretary of Labor for Occupational Safety and Health.

[FR Doc. 2013–09665 Filed 4–23–13; 8:45 am]

BILLING CODE 4510–26–P

NATIONAL SCIENCE FOUNDATION

Notice of Permit Applications Received Under the Antarctic Conservation Act of 1978 (Pub. L. 95–541)

AGENCY: National Science Foundation.

ACTION: Notice of Permit Applications Received under the Antarctic Conservation Act of 1978, Public Law 95–541.

SUMMARY: The National Science Foundation (NSF) is required to publish a notice of permit applications received to conduct activities regulated under the Antarctic Conservation Act of 1978. NSF has published regulations under the Antarctic Conservation Act at Title 45 part 670 of the Code of Federal Regulations. This is the required notice of permit applications received.

DATES: Interested parties are invited to submit written data, comments, or views with respect to this permit application by May 24, 2013. This application may be inspected by interested parties at the Permit Office, address below.

ADDRESSES: Comments should be addressed to Permit Office, Room 755, Office of Polar Programs, National Science Foundation, 4201 Wilson Boulevard, Arlington, Virginia 22230.

FOR FURTHER INFORMATION CONTACT: Polly A. Penhale at the above address or (703) 292–7420.

SUPPLEMENTARY INFORMATION: The National Science Foundation, as directed by the Antarctic Conservation Act of 1978 (Pub. L. 95–541), as amended by the Antarctic Science, Tourism and Conservation Act of 1996, has developed regulations for the establishment of a permit system for various activities in Antarctica and designation of certain animals and certain geographic areas requiring special protection. The regulations establish such a permit system to designate Antarctic Specially Protected Areas.

The applications received are as follows:

Permit Application: 2014–001.

1. Applicant: Ron Naveen, Oceanites, Inc., P.O. Box 15259, Chevy Chase, MD 20825.

Activity for Which Permit Is Requested

Enter Antarctic Specially Protected Areas (ASPA's). The applicant intends to conduct censusing/surveying visitor sites and penguin/seabird breeding locations in the Antarctic Peninsula. Various sites are censused/surveyed each austral spring/summer and may involve infrequent and minimal disturbances to resident fauna such as: Adelie, Chinstrap, Gentoo penguins, Southern giant petrels, Southern Fulmars, Cape Petrels, Antarctic blue-eyed shags, Antarctic Brown skuas, South polar skuas, Kelp gulls, and Antarctic Terns. Analyses flowing from the Antarctic Site Inventory (ASI) fieldwork encompass the entire Antarctic Peninsula. Antarctic Site Inventory censuses/surveys may also include occasional visits to Antarctica Specially Protected Areas such as: ASPA 107-Emperor Island, ASPA 108-Green Island, ASPA 109-Moe Island, ASPA 110-Lynch Island, ASPA 111-Powell Island, ASPA 112-Coppermine Peninsula, ASPA 113-Litchfield Island, ASPA 114-Northern Coronation Island, ASPA 115-Lagotellerie Island, APA 117-Avian Island, ASPA 125-Fildes Peninsula, ASPA 126-Byers Peninsula, ASPA 128-Western Shore of Admiralty Bay, ASPA 129-Rothera Point, ASPA 132-Potter Peninsula, ASPA 133-Harmony Point, ASPA 134-Cierva Point, ASPA 139-Biscoe Point, ASPA 140-Parts of Deception Island, ASPA 144-''Chile Bay'' (Discovery Bay), ASPA 145-Port Foster, ASPA 146-South Bay, ASPA 148-Mount Flora, ASPA 149-Cape Shirreff and San Telmo Island, ASPA 150-Ardley Island, ASPA 151-Lions Rump, ASPA 152-Western Bransfield Strait, and/or ASPA 153-Eastern Dallmann Bay.

Location

Antarctic Peninsula region, Palmer Station area including ASPA 107-Emperor Island, ASPA 108-Green Island, ASPA 109-Moe Island, ASPA 110-Lynch Island, ASPA 111-Powell Island, ASPA 112-Coppermine Peninsula, ASPA 113-Litchfield Island, ASPA 114-Northern Coronation Island, ASPA 115-Lagotellerie Island, APA 117-Avian Island, ASPA 125-Fildes Peninsula, ASPA 126-Byers Peninsula, ASPA 128-Western Shore of Admiralty Bay, ASPA 129-Rothera Point, ASPA 132-Potter Peninsula, ASPA 133-Harmony Point, ASPA 134-Cierva Point, ASPA 139-Biscoe Point, ASPA 140-Parts of Deception Island, ASPA 144-''Chile Bay'' (Discovery Bay), ASPA 145-Port Foster, ASPA 146-South Bay, ASPA 148-Mount Flora, ASPA 149-Cape Shirreff and San Telmo Island, ASPA 150-Ardley Island, ASPA 151-Lions Rump, ASPA 152-Western Bransfield Strait, and/or ASPA 153-Eastern Dallmann Bay

Dates

September 1, 2013 to August 31, 2018.

Nadene G. Kennedy,

Permit Officer, Office of Polar Programs.

[FR Doc. 2013–09559 Filed 4–23–13; 8:45 am]

BILLING CODE 7555–01–P

NATIONAL SCIENCE FOUNDATION

Advisory Committee for Engineering; Notice of Meeting

In accordance with Federal Advisory Committee Act (Pub. L. 92–463, as amended), the National Science Foundation announces the following meeting:

Name: Advisory Committee for Computer and Information Science and Engineering (1115).

Date/Time: May 16, 2013: 12:30 p.m. to 5:30 p.m., May 17, 2013: 8:30 a.m. to 2:00 p.m.

Place: National Science Foundation, 4201 Wilson Boulevard, Suite 1235, Arlington, Virginia 22203.

Type of Meeting: Open.

Contact Person: Carmen Whitson, National Science Foundation, 4201 Wilson Boulevard, Suite 1105, Arlington, Virginia 22203 703–292–8900.

To help facilitate your entry into the building, please contact the individual listed above. Your request to attend this meeting should be received by email (*cwhitson@nsf.gov*) on or prior to May 13, 2013.

Purpose of Meeting: To advise NSF on the impact of its policies, programs and activities on the CISE community. To provide advice to the Assistant Director for CISE on issues related to long-range planning, and to form ad hoc subcommittees to carry out needed studies and tasks.

Agenda:

- Meet with members of the Advisory Committee for Cyberinfrastructure
- Overview of CISE FY 2014 Budget Priorities and programmatic updates
- Working group breakout sessions
- Report from Postdocs working group
- Report from CISE Vision 2025 working group
- Open Access Data Panel and discussion
- Welcome from Dr. Cora Marrett, NSF Acting Director
- Closing remarks and wrap up

Dated: April 18, 2013.

Susanne Bolton,

Committee Management Officer.

[FR Doc. 2013–09577 Filed 4–23–13; 8:45 am]

BILLING CODE 7555–01–P

NATIONAL SCIENCE FOUNDATION

Advisory Committee for Cyberinfrastructure; Notice of Meeting

In accordance with the Federal Advisory Committee Act (Pub. L. 92–463, as amended), the National Science Foundation announces the following meeting:

Name: Advisory Committee for Cyberinfrastructure (25150).

Date and Time: May 15, 2013, 12:00 p.m.–5:00 p.m.; May 16, 2013, 8:30 a.m.–1:00 p.m.

Place: National Science Foundation, Room 1235, 4201 Wilson Blvd., Arlington, VA 22230.

Type of Meeting: Open.

Contact Person: Marc Rigas, Advanced Cyberinfrastructure (CISE/ACI), National Science Foundation, 4201 Wilson Blvd., Suite 1145, Arlington, VA 22230, Telephone: 703–292–8970.

Minutes: May be obtained from the contact person listed above.

Purpose of Meeting: To advise NSF on the impact of its policies, programs and activities in the ACI community. To provide advice to the National Science Foundation on issues related to long-range planning.

Agenda: Updates on NSF wide Cyberinfrastructure activities.

Dated: April 18, 2013.

Susanne Bolton,

Committee Management Officer.

[FR Doc. 2013–09576 Filed 4–23–13; 8:45 am]

BILLING CODE 7555–01–P

POSTAL REGULATORY COMMISSION

[Docket No. R2013–6; Order No. 1702]

Temporary Mailing Promotion

AGENCY: Postal Regulatory Commission.

ACTION: Notice.

SUMMARY: The Commission is noticing a recent Postal Service filing concerning

temporary price and classification changes associated with offering a Technology Credit Promotion. This notice informs the public of the Postal Service's filing and takes other administrative steps.

DATES: *Comment Date:* May 6, 2013.

ADDRESSES: Submit comments electronically via the Commission's Filing Online system at *http://www.prc.gov*. Those who cannot submit comments electronically should contact the person identified in the **FOR FURTHER INFORMATION CONTACT** section by telephone for advice on filing alternatives.

FOR FURTHER INFORMATION CONTACT: Stephen L. Sharfman, General Counsel, at 202–789–6820.

SUPPLEMENTARY INFORMATION:

Table of Contents

I. Overview
II. Administrative Actions
III. Ordering Paragraphs

I. Overview

On April 16, 2013, the Postal Service filed notice, pursuant to 39 U.S.C. 3622 and 39 CFR part 3010, of plans to implement temporary price and classification changes associated with offering a Technology Credit Promotion.[1] The promotion is planned to begin on June 1, 2013, and expire on May 31, 2014.

Technology Credit Promotion description. The Technology Credit Promotion provides mailers with a one-time credit towards future mailings that employ Full Service Intelligent Mail barcodes (IMb). The total value of the promotion will be approximately $66 million. The amount of the credit will be based on a mailer's FY 2012 mail volumes. The purpose of the promotion is to encourage adoption of Full Service IMb by offsetting a portion of a mailer's investment in hardware and software necessary to support Full Service IMb. Notice at 1.

The Technology Credit Promotion applies to mail sent as First-Class Mail Presorted Letters/Postcards, First-Class Mail Flats, Standard Mail Carrier Route, Standard Mail Flats, In-County Periodicals, Outside County Periodicals, and Package Services Bound Printed Matter Flats (collectively, Qualifying Mail). *Id.* at 3.

To be eligible for the promotion, mailers must have mailed more than 125,000 Qualifying Mail pieces per business location (*i.e.,* each Customer Registration ID or CRID) in FY 2012. *Id.* In March 2013, the Postal Service informed these customers of their eligibility for the promotion. *Id.* at 2. The amount of the promotional credit is based on the volume of mail associated with each CRID as shown below.

CRID volume	Eligible credit
125,001–500,000	$2,000
500,001–2,000,000	3,000
More than 2,000,000	5,000

The credit is granted to any qualifying CRID for future mailings containing 90 percent or more mailpieces meeting Full Service IMb requirements. The credit is automatically applied as a postage credit to a mailer's postage statement upon submission of an eligible mailing. The credit is applied in an amount up to the total amount of the mailing statement. Any remaining credit is available for subsequent mailings. Unused credits expire on May 31, 2014. *Id.* at 3–4.

The Postal Service notes that some CRIDs belong to mail service providers that do not have their own permit imprints. To include them in the promotion, the Postal Service intends to allow the mail service providers to apply for a permit imprint without paying the application fee. *Id.* at 4.

Price cap compliance. The Postal Service notes that it plans to implement the Technology Credit Promotion roughly mid-point between two annual market dominant price adjustments. It contends that Commission rules 3010.20 *et seq.* do not appear to address the calculation and use of pricing authority in such a situation. *Id.*

The Postal Service proposes to treat the Technology Credit Promotion as a decrease in rates resulting in price authority, and delay the use of that pricing authority until the next market dominant price adjustment. *Id.* at 5, 6. It does not wish to ''bank'' the amount of the authority if the banked authority could be used only after it uses all previously banked authority. *Id.* at 5, n.3.

The Postal Service attached an Excel file to its Notice which provides a preliminary calculation of price adjustment authority associated with the Technology Credit Promotion as summarized below.

Class of mail	Pricing authority (%)
First-Class Mail	0.077
Standard Mail	0.158
Periodicals	0.244
Package Services	0.014

Workshare discounts and preferred rates. The Postal Service asserts the Technology Credit Promotion does not affect workshare discounts. *Id.* at 10. Apart from volume thresholds, it also asserts the promotion does not exclude any mailer and will therefore not affect compliance with any preferred price requirement. *Id.* at 11.

Mail Classification Schedule. Proposed changes to the Mail Classification Schedule, which describe the Technology Credit Program, appear in Attachment A of the Postal Service's Notice.

II. Administrative Actions

Initiation of proceedings. The Commission hereby establishes Docket No. R2013–6, Notice of Price Adjustment (Technology Credit Promotion), to conduct the review of the Postal Service's planned price adjustments associated with the Technology Credit Promotion. The Postal Service's Notice and any subsequent filings in this docket will be posted to the Commission's Web site at *http://www.prc.gov*.

Public comment period. The Commission's rules provide a period of 20 days from the date of the Postal Service's filing for public comment. 39 CFR 3010.13(a)(5). Comments by interested persons are due no later than May 6, 2013.

Appointment of Public Representative. In conformance with 39 U.S.C. 505, the Commission appoints Robert N. Sidman to represent the interests of the general public in this proceeding.

III. Ordering Paragraphs

It is ordered:

1. The Commission establishes Docket No. R2013–6 to consider the temporary adjustment of prices associated with the Technology Credit Promotion identified in the Postal Service's April 16, 2013 Notice.

2. Comments by interested persons on the planned price adjustments are due no later than May 6, 2013.

3. Pursuant to 39 U.S.C. 505, the Commission appoints Robert N. Sidman to represent the interests of the general public in this proceeding.

4. The Commission directs the Secretary of the Commission to arrange for publication of this notice in the **Federal Register**.

By the Commission.

Shoshana M. Grove,

Secretary.

[FR Doc. 2013–09597 Filed 4–23–13; 8:45 am]

BILLING CODE 7710–FW–P

[1] United States Postal Service Notice of Market-Dominant Price Adjustment (Technology Credit Promotion), April 16, 2013 (Notice).

OFFICE OF SCIENCE AND TECHNOLOGY POLICY

Nanoscale Science, Engineering, and Technology Subcommittee; Committee on Technology, National Science and Technology Council; Notice of Public Meeting

AGENCY: Executive Office of the President, Office of Science and Technology Policy.

ACTION: Notice of Public Meeting.

SUMMARY: The National Nanotechnology Coordination Office (NNCO), on behalf of the Nanoscale Science, Engineering, and Technology (NSET) Subcommittee of the Committee on Technology, National Science and Technology Council (NSTC), will hold a workshop on June 11–12, 2013, to obtain input from stakeholders regarding the goals and objectives of an updated U.S. National Nanotechnology Initiative (NNI) Strategic Plan that is currently under development and scheduled for completion by December 2013. Representatives of the U.S. research community, industry, non-governmental organizations, and interested members of the general public are invited to offer suggestions to the U.S. Government interagency group that is drafting the new plan, which is an update of the 2011 NNI Strategic Plan (*see http://nano.gov/sites/default/files/pub_resource/2011_strategic_plan.pdf*). In particular, participants will be invited to suggest additions to and provide feedback on wording and emphasis areas in the NNI goals, the objectives that support these goals, and the Nanotechnology Signature Initiatives. Comments will also be solicited on the relationship between these topics and the revised Program Component Areas, which will be presented at the event.

DATES: Tuesday, June 11, 2013 from 8:00 a.m. until 5:00 p.m. and on Wednesday, June 12, 2013 from 8:00 a.m. until 1:00 p.m.

ADDRESSES: The workshop will be held at USDA Conference and Training Center, Patriots Plaza III, 355 E Street SW., Washington, DC 20024.

Registration: Due to space limitations, pre-registration for the workshop is required. Registration will open on May 1, 2013 and remain open until June 3, 2013 or until capacity is reached. Individuals planning to attend the workshop should register online at *http://www.nano.gov/stakeholderworkshop*. Written notices of participation by email should be sent to *stakeholderworkshop@nnco.nano.gov* or mailed to Stacey Standridge, 4201 Wilson Boulevard, Stafford II, Suite 405, Arlington, VA 22230. Please provide your full name, title, affiliation and email or mailing address when registering. Registration is on a first-come, first-served basis until capacity is reached. Those interested in presenting 3–5 minutes of public comments at the meeting should also register at *http://www.nano.gov/stakeholderworkshop*. Written or electronic comments should be submitted by email to *stakeholderworkshop@nnco.nano.gov* until May 13, 2013.

Meeting Accomodations: Individuals requiring special accommodation to access this public meeting should contact Stacey Standridge (telephone 703–292–8103) or Cheryl David-Fordyce (703–292–2424) at least ten business days prior to the meeting so that appropriate arrangements can be made.

FOR FURTHER INFORMATION CONTACT: For information regarding this Notice, please contact Stacey Standridge at National Nanotechnology Coordination Office, by telephone (703–292–8103) or email (*sstandridge@nnco.nano.gov*). Additional information about the meeting, including the agenda, is posted at *http://www.nano.gov/stakeholderworkshop*.

Ted Wackler,

Deputy Chief of Staff and Assistant Director.

[FR Doc. 2013–09729 Filed 4–23–13; 8:45 am]

BILLING CODE 3270–F3–P

SECURITIES AND EXCHANGE COMMISSION

[Investment Company Act Release No. 30469; 812–13734]

John Hancock Exchange-Traded Fund Trust, et al.; Notice of Application

April 18, 2013.

AGENCY: Securities and Exchange Commission (''Commission'').

ACTION: Notice of an application for an order under section 6(c) of the Investment Company Act of 1940 (''Act'') for an exemption from sections 2(a)(32), 5(a)(1), 22(d) and 22(e) of the Act and rule 22c–1 under the Act, and under section 12(d)(1)(J) of the Act for an exemption from sections 12(d)(1)(A) and (B) of the Act, and under sections 6(c) and 17(b) of the Act for an exemption from sections 17(a)(1) and 17(a)(2) of the Act.

APPLICANTS: John Hancock Exchange-Traded Fund Trust (''Trust''); John Hancock Advisers, LLC and John Hancock Investment Management Services, LLC (each, an ''Adviser,'' and collectively the ''Advisers''); and John Hancock Funds, LLC (''JHF LLC'').

SUMMARY OF APPLICATION: Applicants request an order that would permit: (a) Actively managed series of certain open-end management investment companies to issue shares (''Shares'') redeemable in large aggregations only (''Creation Units''); (b) secondary market transactions in Shares to occur at negotiated market prices; (c) certain series to pay redemption proceeds, under certain circumstances, more than seven days after the tender of Creation Units for redemption; (d) certain affiliated persons of the series to buy securities from, and sell securities to, the series in connection with the purchase and redemption of Creation Units; (e) certain registered management investment companies and unit investment trusts outside of the same group of investment companies as the series to acquire Shares; and (f) certain series to perform creations and redemptions of Creation Units in-kind in a master-feeder structure.[1]

DATES: FILING DATES: The application was filed on December 23, 2009 and amended on June 18, 2010, August 29, 2011, August 9, 2012, January 14, 2013, and March 28, 2013.

HEARING OR NOTIFICATION OF HEARING: An order granting the requested relief will be issued unless the Commission orders a hearing. Interested persons may request a hearing by writing to the Commission's Secretary and serving applicants with a copy of the request, personally or by mail. Hearing requests should be received by the Commission by 5:30 p.m. on May 13, 2013, and should be accompanied by proof of service on applicants, in the form of an affidavit or, for lawyers, a certificate of service. Hearing requests should state the nature of the writer's interest, the reason for the request, and the issues contested. Persons who wish to be notified of a hearing may request notification by writing to the Commission's Secretary.

ADDRESSES: Secretary, U.S. Securities and Exchange Commission, 100 F Street NE., Washington, DC 20549–1090. Applicants: Thomas M. Kinzler, Esq., 601 Congress Street, Boston, MA 02210–2805.

FOR FURTHER INFORMATION CONTACT: Courtney S. Thornton, Senior Counsel, at (202) 551–6812 or David P. Bartels, Branch Chief, at (202) 551–6821 (Division of Investment Management,

[1] Capitalized terms not otherwise defined in this notice have the same meaning ascribed to them in the application.

Office of Investment Company Regulation).

SUPPLEMENTARY INFORMATION: The following is a summary of the application. The complete application may be obtained via the Commission's Web site by searching for the file number, or an applicant using the Company name box, at *http://www.sec.gov/search/search.htm* or by calling (202) 551–8090.

Applicants' Representations

1. The Trust, a Massachusetts business trust, is registered under the Act as an open-end management company. The Trust currently is comprised of a single, actively-managed investment series, John Hancock Global Balanced ETF (the ''Initial Fund''). The investment objective of the Initial Fund will be to seek a balance between a high level of current income and growth of capital, with a greater emphasis on growth of capital.

2. The Advisers, each of which is a Delaware limited liability company, are registered as investment advisers under the Investment Advisers Act of 1940 (the ''Advisers Act''). Each Adviser will be an investment adviser to one or more of the Funds (defined below) and may enter into sub-advisory agreements with one or more affiliated or unaffiliated investment advisers, including the other Adviser, to serve as sub-adviser to one or more of the Funds or to a portion of one or more Funds' portfolios (each, a ''Sub-Adviser''). Each Sub-Adviser will be registered, or not subject to registration, as an investment adviser under the Advisers Act.

3. The Trust will enter into a distribution agreement with JHF LLC, a Delaware limited liability company, and in the future may enter into a distribution agreement with one or more other distributors. Each distributor will be a broker-dealer (''Broker'') registered under the Securities Exchange Act of 1934 (''Exchange Act'') and will act as distributor and principal underwriter for one or more of the Funds (the ''Distributor''). Applicants represent that the Fund's Listing Exchange (as defined below) will not be affiliated with the Distributor. However, the Distributor may be an ''affiliated person,'' or an affiliated person of an affiliated person, of a Fund's Adviser and/or Sub-Adviser.

4. Applicants are requesting relief to permit the Trust to offer one or more actively managed series that offer exchange-traded Shares with limited redeemability. Applicants request that the order apply to the Initial Fund as well as to additional series of the Trust and other open-end management investment companies, or series thereof, that may be created in the future (''Future Funds,'' collectively with the Initial Fund, ''Funds''). Each Fund will (a) be advised by an Adviser or an entity controlling, controlled by or under common control with the Adviser and (b) comply with the terms and conditions of the application.[2] Each Fund will operate as an actively managed exchange-traded fund (''ETF'').

5. The Initial Fund will operate as a single-tier fund that will invest in securities and other instruments, including shares of other investment companies, subject to the limits of section 12(d)(1)(A) of the Act, in accordance with its investment objectives (''Single-Tier Fund''). The Initial Fund and any future Single-Tier Fund may operate as a feeder fund in a master-feeder structure (''Feeder Fund''). No Single-Tier Fund will be permitted to acquire securities of any investment company or company relying on section 3(c)(1) or section 3(c)(7) of the Act in excess of the limits contained in section 12(d)(1)(A) of the Act, except to acquire securities of its Master Fund, if any, pursuant to the Master-Feeder Relief (defined below) and as otherwise described in condition B.12.

6. Applicants also request relief (''Funds of Funds Relief'') to permit management investment companies (''Investing Management Companies'') and unit investment trusts (''Investing Trusts,'' collectively with such Investing Management Companies, ''Investing Funds'') registered under the Act that are not part of the same ''group of investment companies,'' within the meaning of section 12(d)(1)(G)(ii) of the Act, as the Funds to acquire Shares of Single-Tier Funds beyond the limitations in section 12(d)(1)(A). The requested order also would permit the Single-Tier Funds, any principal underwriter for the Single-Tier Funds, and any Broker to sell Shares of the Single-Tier Funds beyond the limitations in section 12(d)(1)(B) (''Fund of Funds Relief''). Applicants ask that the Funds of Funds Relief apply to: (1) Each Single-Tier Fund that is currently or subsequently part of the same ''group of investment companies'' as the Initial Fund as well as any principal underwriter for the Single-Tier Funds and any Brokers selling Shares of a Single-Tier Fund to Investing Funds; and (2) each Investing Fund that enters into a participation agreement (''Participation Agreement'') with a Single-Tier Fund.[3]

7. Applicants further request that the order permit a Single-Tier Fund to operate as a Feeder Fund (''Master-Feeder Relief''). Under the order, a Feeder Fund would be permitted to acquire shares of another registered investment company in the same group of investment companies having substantially the same investment objectives as the Feeder Fund (''Master Fund'') beyond the limitations in section 12(d)(1)(A) of the Act,[4] and the Master Fund, and any principal underwriter for the Master Fund, would be permitted to sell shares of the Master Fund to the Feeder Fund beyond the limitations in section 12(d)(1)(B) of the Act. Applicants request that the Master-Feeder Relief apply to any Feeder Fund, any Master Fund and any principal underwriter for the Master Funds selling shares of a Master Fund to a Feeder Fund. Applicants state that creating an exchange-traded feeder fund is preferable to creating entirely new series for several reasons, including avoiding additional overhead costs and economies of scale for the Feeder Funds.[5] Applicants assert that, while certain costs may be higher in a master-feeder structure and there may possibly be lower tax efficiencies for the Feeder Funds, the Feeder Funds' Board will consider any such potential disadvantages against the benefits of economies of scale and other benefits of operating within a master-feeder structure.

8. The Funds, or their respective Master Funds, may invest in, among other investments, equity securities and/or fixed income securities traded in the U.S. and/or non-U.S. markets, as well as forward contracts, shares of other ETFs and shares of U.S. or non-U.S. money market mutual funds, other investment companies that invest primarily in short-term fixed income securities or other investment companies, or other instruments, all in accordance with their investment objectives and all of which may be denominated in U.S. dollars or a foreign currency. Funds may also invest in

[2] All entities that currently intend to rely on the order are named as applicants. Any other existing or future entity, including any investment adviser controlling, controlled by, or under common control with an Adviser, that subsequently relies on the order will comply with the terms and conditions of the application.

[3] An Investing Fund (as defined below) may rely on the order to invest in Single-Tier Funds but not in any other registered investment company or any Fund that does not operate as a Single-Tier Fund. ''Investing Funds'' do not include the Funds.

[4] A Feeder Fund managed in a master-feeder structure will not make direct investments in any securities other than the securities issued by its respective Master Fund.

[5] There would be no ability by Fund shareholders to exchange shares of Feeder Funds for shares of another feeder series of the Master Fund.

Depositary Receipts.[6] The securities, currencies, derivatives, other assets and other positions held by a Fund (or its respective Master Fund) are referred to herein as its ''Portfolio Securities.'' Funds, including the Initial Fund, that invest all or a portion of their assets in foreign instruments are ''Global Funds.'' If a Fund (or its respective Master Fund) makes use of derivatives, then (a) the Fund's board of directors or trustees (''Board'') will periodically review and approve the Fund's (or, in the case of a Feeder Fund, its Master Fund's) use of derivatives and how the Adviser assesses and manages risk with respect to the Fund's (or, in the case of a Feeder Fund, its Master Fund's) use of derivatives and (b) the Fund's disclosure of its (or, in the case of a Feeder Fund, its Master Fund's) use of derivatives in its offering documents and periodic reports will be consistent with relevant Commission and staff guidance.

9. Applicants state that each Fund will issue, on a continuous offering basis, Creation Units of a fixed number of Shares (e.g., at least 25,000 Shares) and that the trading price of a Share will range from $20 to $100. All orders to purchase Creation Units must be placed with the Distributor by or through an ''Authorized Participant,'' which is either (a) a Broker or other participant in the Continuous Net Settlement System of the National Securities Clearing Corporation (''NSCC'') or (b) a participant in the Depository Trust Company (''DTC''), which, in either case, has signed a ''Participant Agreement'' with the Distributor. The Distributor will deliver a confirmation and prospectus (''Prospectus'') to the purchaser and will maintain a record of the instructions given to the Trust to implement the delivery of Shares.

10. Shares will be purchased and redeemed in Creation Units and generally on an in-kind basis.[7] Except where the purchase or redemption will include cash under the limited circumstances specified below, purchasers will be required to purchase Creation Units by making an in-kind deposit of specified instruments (''Deposit Instruments''), and shareholders redeeming their Shares will receive an in-kind transfer of specified instruments (''Redemption Instruments'').[8] On any given Business Day,[9] the names and quantities of the instruments that constitute the Deposit Instruments and the names and quantities of the instruments that constitute the Redemption Instruments will be identical, and these instruments may be referred to, in the case of either a purchase or redemption, as the ''Creation Basket.'' In addition, the Creation Basket will correspond *pro rata* to the positions in the Fund's portfolio (including cash positions),[10] except: (a) In the case of bonds, for minor differences when it is impossible to break up bonds beyond certain minimum sizes needed for transfer and settlement; (b) for minor differences when rounding is necessary to eliminate fractional shares or lots that are not tradeable round lots; [11] or (c) to-be-announced transactions,[12] short positions, derivatives, and other positions that cannot be transferred in kind [13] will be excluded from the Creation Basket.[14] If there is a difference between the net asset value (''NAV'') attributable to a Creation Unit and the aggregate market value of the Creation Basket exchanged for the Creation Unit, the party conveying instruments with the lower value will also pay to the other an amount in cash equal to that difference (the ''Cash Amount'').

11. Purchases and redemptions of Creation Units may be made in whole or in part on a cash basis, rather than in kind, solely under the following circumstances: (a) To the extent there is a Cash Amount, as described above; (b) if, on a given Business Day, a Fund announces before the open of trading that all purchases, all redemptions or all purchases and redemptions on that day will be made entirely in cash; (c) if, upon receiving a purchase or redemption order from an Authorized Participant, a Fund determines to require the purchase or redemption, as applicable, to be made entirely in cash; (d) if, on a given Business Day, a Fund requires all Authorized Participants purchasing or redeeming Shares on that day to deposit or receive (as applicable) cash in lieu of some or all of the Deposit Instruments or Redemption Instruments, respectively, solely because: (i) such instruments are not eligible for transfer through either the NSCC or DTC; or (ii) in the case of Global Funds, such instruments are not eligible for trading due to local trading restrictions, local restrictions on securities transfers or other similar circumstances; or (e) if a Fund permits an Authorized Participant to deposit or receive (as applicable) cash in lieu of some or all of the Deposit Instruments or Redemption Instruments, respectively, solely because: (i) such instruments are, in the case of the purchase of a Creation Unit, not available in sufficient quantity; (ii) such instruments are not eligible for trading by an Authorized Participant or the investor on whose behalf the Authorized Participant is acting; or (iii) a holder of Shares of a Global Fund would be subject to unfavorable income tax treatment if the holder receives redemption proceeds in kind.[15]

12. Each Business Day, before the open of trading on the Fund's listing Exchange, each Fund will cause to be published through the NSCC the names and quantities of the instruments comprising the Creation Basket, as well as the estimated Cash Amount (if any), for that day. The published Creation Basket will apply until a new Creation Basket is announced on the following Business Day, and there will be no intra-day changes to the Creation Basket except to correct errors in the published Creation Basket. An amount representing, on a per Share basis, the sum of the current value of the Fund's Portfolio Securities will be disseminated every 15 seconds throughout the trading

[6] Depositary Receipts are typically issued by a financial institution (a ''Depository'') and evidence ownership in a security or pool of securities that have been deposited with the Depository. A Fund (or its respective Master Fund) will not invest in any Depositary Receipt that the Adviser or Sub-Adviser deems to be illiquid or for which pricing information is not readily available. No affiliated persons of applicants or any Sub-Adviser will serve as the Depository for any Depositary Receipts held by a Fund.

[7] Feeder Funds will redeem shares from the appropriate Master Fund and then deliver to the redeeming shareholder the applicable redemption payment.

[8] The Funds must comply with the federal securities laws in accepting Deposit Instruments and satisfying redemptions with Redemption Instruments, including that the Deposit Instruments and Redemption Instruments are sold in transactions that would be exempt from registration under the Securities Act of 1933 (''Securities Act''). In accepting Deposit Instruments and satisfying redemptions with Redemption Instruments that are restricted securities eligible for resale pursuant to rule 144A under the Securities Act, the Funds will comply with the conditions of rule 144A.

[9] Each Fund will sell and redeem Creation Units on any day the Fund is open, including as required by section 22(e) of the Act (each, a ''Business Day'').

[10] The portfolio used for this purpose will be the same portfolio used to calculate the Fund's NAV for that Business Day.

[11] A tradeable round lot for a security will be the standard unit of trading in that particular type of security in its primary market.

[12] A ''to-be-announced transaction'' is a method of trading mortgage-backed securities. In a to-be-announced transaction, the buyer and seller agree on general trade parameters such as agency, settlement date, par amount, and price.

[13] This includes instruments that can be transferred in kind only with the consent of the original counterparty to the extent the Fund does not intend to seek such consents.

[14] Because these instruments will be excluded from the Creation Basket, their value will be reflected in the determination of the Cash Amount (defined below).

[15] A ''custom order'' is any purchase or redemption of Shares made in whole or in part on a cash basis in reliance on clause (e)(i) or (e)(ii).

day through the facilities of the Consolidated Tape Association.

13. An investor purchasing or redeeming a Creation Unit from a Fund may be charged a fee (''Transaction Fee'') to defray transaction expenses as well as to prevent possible shareholder dilution.[16] Where a Fund permits a purchaser to substitute cash in lieu of depositing a portion of the requisite Deposit Instruments, the purchaser may be assessed a higher Transaction Fee to cover the costs of purchasing those Deposit Instruments. In all cases, the Transaction Fee will be limited in accordance with requirements of the Commission applicable to management investment companies offering redeemable securities.

14. Purchasers of Shares in Creation Units may hold such Shares or may sell such Shares into the secondary market. The principal secondary market for Shares will be the primary listing Exchange. When Arca or the NYSE is the primary listing Exchange, it is expected that one or more Exchange member firms will be designated by the Exchange to act as a market maker (''Market Maker'').[17] The price of Shares trading on an Exchange will be based on a current bid/offer market. Transactions involving the sale of Shares on an Exchange will be subject to customary brokerage commissions and charges.

15. Applicants expect that purchasers of Creation Units will include institutional investors and arbitrageurs. Market Makers, acting in the role of providing a fair and orderly secondary market for Shares, may from time to time find it appropriate to purchase or redeem Creation Units. Applicants expect that secondary market purchasers of Shares will include both institutional investors and retail investors.[18] Applicants state that, in light of the full portfolio transparency and efficient arbitrage mechanism inherent in each Fund's structure, the secondary market prices for Shares of the Funds should be close to NAV and should reflect the value of each Fund's Portfolio Securities. Applicants do not believe that the Shares will persistently trade in the secondary market at a material premium or discount in relation to the Fund's NAV.

16. Shares will not be individually redeemable and owners of Shares may acquire those Shares from a Fund, or tender such shares for redemption to the Fund, in Creation Units only. To redeem, an investor must accumulate enough Shares to constitute a Creation Unit. Redemption requests must be placed by or through an Authorized Participant.

17. Neither the Trust nor any Fund will be advertised or marketed or otherwise held out as a traditional open-end investment company or a mutual fund. Instead, each Fund will be marketed as an ''actively managed exchange-traded fund.'' All marketing materials that describe the features or method of obtaining, buying or selling Creation Units, or Shares traded on an Exchange, or refer to redeemability, will prominently disclose that Shares are not individually redeemable and that the owners of Shares may acquire those Shares from the Fund, or tender those Shares for redemption to the Fund, in Creation Units only.[19]

18. The Trust's Web site (''Web site''), which will be publicly available prior to the public offering of Shares, will include the current Prospectus and may include the Summary Prospectus and Statement of Additional Information (''SAI''). The Web site will include additional quantitative information updated on a daily basis, including, for each Fund, daily trading volume, the prior Business Day's market closing price, NAV and Bid/Ask Price, and a calculation of the premium and discount of the market closing price or Bid/Ask Price against the NAV. On each Business Day, before commencement of trading in Shares on the Exchange, the Fund will disclose on the Web site the identities and quantities of the Portfolio Securities held by the Fund (or its respective Master Fund)[20] that will form the basis for the Fund's calculation of NAV at the end of the Business Day.[21]

Applicants' Legal Analysis

1. Applicants request an order under section 6(c) of the Act granting an exemption from sections 2(a)(32), 5(a)(1), 22(d) and 22(e) of the Act and rule 22c–1 under the Act; and under sections 6(c) and 17(b) of the Act granting an exemption from sections 17(a)(1) and (2) of the Act, and under section 12(d)(1)(J) for an exemption from sections 12(d)(1)(A) and (B) of the Act.

2. Section 6(c) of the Act provides that the Commission may exempt any person, security or transaction, or any class of persons, securities or transactions, from any provision of the Act, if and to the extent that such exemption is necessary or appropriate in the public interest and consistent with the protection of investors and the purposes fairly intended by the policy and provisions of the Act. Section 17(b) of the Act authorizes the Commission to exempt a proposed transaction from section 17(a) of the Act if evidence establishes that the terms of the transaction, including the consideration to be paid or received, are reasonable and fair and do not involve overreaching on the part of any person concerned, and the proposed transaction is consistent with the policies of the registered investment company and the general provisions of the Act. Section 12(d)(1)(J) of the Act provides that the Commission may exempt any person, security, or transaction, or any class or classes of persons, securities or transactions, from any provision of section 12(d)(1) if the exemption is consistent with the public interest and the protection of investors.

[16] Applicants are not requesting relief from section 18 of the Act. Accordingly, a Master Fund may require a Transaction Fee payment to cover expenses related to purchases or redemptions of the Master Fund's shares by a Feeder Fund only if it requires the same payment for equivalent purchases or redemptions by any other feeder fund. Thus, for example, a Master Fund may require payment of a Transaction Fee by a Feeder Fund for transactions for 20,000 or more shares so long as it requires payment of the same Transaction Fee by all feeder funds for transactions involving 20,000 or more shares.

[17] If Shares are listed on Nasdaq or a similar electronic Exchange (including NYSE Arca (''Arca'')), one or more member firms of that Exchange will act as Market Maker and maintain a market for Shares trading on the Exchange. On Nasdaq, no particular Market Maker would be contractually obligated to make a market in Shares. However, the listing requirements on Nasdaq, for example, stipulate that at least two Market Makers must be registered in Shares to maintain a listing. In addition, on Nasdaq and Arca, registered Market Makers are required to make a continuous two-sided market or subject themselves to regulatory sanctions. No Market Maker will be an affiliated person, or an affiliated person of an affiliated person, of the Funds, except within section 2(a)(3)(A) or (C) of the Act due solely to ownership of Shares.

[18] Shares will be registered in book-entry form only. DTC or its nominee will be the registered owner of all outstanding Shares. Beneficial ownership of Shares will be shown on the records of DTC or DTC Participants.

[19] As noted above, the Funds may operate in a master-feeder structure. Under such circumstances, the Feeder Funds would operate, and would be marketed, as ETFs. Applicants do not believe the master-feeder structure contemplated in the application would be confusing to investors because any additional feeder fund that is a traditional mutual fund or other pooled investment vehicle would be marketed separately. The prospectus for each Feeder Fund will clearly indicate that the Feeder Fund is an ETF, each Feeder Fund will have a prospectus separate and distinct from any other feeder funds; and as required by the conditions herein, the Feeder Funds will not be marketed as mutual funds.

[20] For Funds that are part of a master-feeder structure, the Fund will disclose information about the securities and other assets held by the Master Fund.

[21] Under accounting procedures followed by the Funds, trades made on the prior Business Day (''T'') will be booked and reflected in NAV on the current Business Day (''T+1''). Accordingly, the Funds will be able to disclose at the beginning of the Business Day the portfolio that will form the basis for the NAV calculation at the end of the Business Day.

Sections 5(a)(1) and 2(a)(32) of the Act

3. Section 5(a)(1) of the Act defines an ''open-end company'' as a management investment company that is offering for sale or has outstanding any redeemable security of which it is the issuer. Section 2(a)(32) of the Act defines a redeemable security as any security, other than short-term paper, under the terms of which the holder, upon its presentation to the issuer, is entitled to receive approximately a proportionate share of the issuer's current net assets, or the cash equivalent. Because Shares will not be individually redeemable, Applicants request an order to permit the Trust to register as an open-end management investment company and issue Shares that are redeemable in Creation Units only.[22] Applicants state that Creation Units will always be redeemable in accordance with the provisions of the Act and that owners of Shares may purchase the requisite number of Shares and tender the resulting Creation Unit for redemption. Applicants further state that, because of the arbitrage possibilities created by the redeemability of Creation Units, it is expected that market price of individual Shares will not vary much from NAV.

Section 22(d) of the Act and Rule 22c–1 Under the Act

4. Section 22(d) of the Act, among other things, prohibits a dealer from selling a redeemable security that is currently being offered to the public by or through a principal underwriter, except at a current public offering price described in the prospectus. Rule 22c–1 under the Act generally requires that a dealer selling, redeeming, or repurchasing a redeemable security do so only at a price based on its NAV. Applicants state that secondary market trading in Shares will take place at negotiated prices, rather than at the current offering price described in the Fund's Prospectus or at a price based on NAV. Thus, purchases and sales of Shares in the secondary market will not comply with section 22(d) of the Act and rule 22c–1 under the Act. Applicants request an exemption under section 6(c) from these provisions.

5. Applicants assert that the concerns sought to be addressed by section 22(d) of the Act and rule 22c–1 under the Act with respect to pricing are equally satisfied by the proposed method of pricing Shares. Applicants maintain that while there is little legislative history regarding section 22(d), its provisions, as well as those of rule 22c–1, appear to have been intended (a) To prevent dilution caused by certain riskless-trading schemes by principal underwriters and contract dealers, (b) to prevent unjust discrimination or preferential treatment among buyers, and (c) to ensure an orderly distribution system of shares by contract dealers by eliminating price competition from non-contract dealers who could offer investors shares at less than the published sales price and who could pay investors a little more than the published redemption price.

6. Applicants believe that none of these purposes will be thwarted by permitting Shares to trade in the secondary market at negotiated prices. Applicants state that (a) secondary market transactions in Shares would not cause dilution for owners of such Shares because such transactions do not directly involve Fund assets, and (b) to the extent different prices exist during a given trading day, or from day to day, such variances occur as a result of third-party market forces. Therefore, applicants assert that secondary market transactions in Shares will not lead to discrimination or preferential treatment among purchasers. Finally, applicants contend that the proposed distribution system will be orderly because arbitrage activity will ensure that the difference between NAV and the market price of Shares will not be material.

Section 22(e) of the Act

7. Section 22(e) generally prohibits a registered investment company from suspending the right of redemption or postponing the date of payment of redemption proceeds for more than seven days after the tender of a security for redemption. Applicants observe that the settlement of redemptions of Creation Units of Global Funds is contingent not only on the settlement cycle of the U.S. securities markets but also on the delivery cycles present in foreign markets for underlying foreign Portfolio Instruments in which those Funds invest. Applicants have been advised that, under certain circumstances, the delivery cycles for transferring Portfolio Securities to redeeming investors, coupled with local market holiday schedules, will require a delivery process of longer than seven days. Applicants therefore request relief from section 22(e) in order to provide payment or satisfaction of redemptions within a longer number of calendar days as required for such payment or satisfaction in the principal local markets in which the Portfolio Securities of each Global Fund customarily clear and settle, but in all cases no later than 15 days[23] following the tender of a Creation Unit.[24]

8. Applicants submit that Congress adopted section 22(e) to prevent unreasonable, undisclosed or unforeseen delays in the actual payment of redemption proceeds. Applicants state that allowing redemption payments for Creation Units of a Global Fund to be made within the number of days indicated above would not be inconsistent with the spirit and intent of section 22(e).[25] Applicants state that the SAI will disclose those local holidays that are expected to prevent the delivery of redemption proceeds in seven calendar days and the maximum number of days needed to deliver the proceeds for each affected Global Fund. Applicants are not seeking relief from section 22(e) with respect to Global Funds that do not effect creations and redemptions in-kind.

Section 12(d)(1) of the Act

9. Section 12(d)(1)(A) of the Act prohibits a registered investment company from acquiring shares of an investment company if the securities represent more than 3% of the total outstanding voting stock of the acquired company, more than 5% of the total assets of the acquiring company, or, together with the securities of any other investment companies, more than 10% of the total assets of the acquiring company. Section 12(d)(1)(B) of the Act prohibits a registered open-end investment company, its principal underwriter, or any other Broker from selling its shares to another investment company if the sale will cause the acquiring company to own more than 3% of the acquired company's voting stock, or if the sale will cause more than 10% of the acquired company's voting stock to be owned by investment companies generally.

10. Applicants request relief to permit Investing Funds to acquire Shares of Single-Tier Funds in excess of the limits in section 12(d)(1)(A) of the Act and to permit the Single-Tier Funds, their principal underwriters and any Broker to sell Shares to Investing Funds in excess of the limits in section 12(d)(1)(B) of the Act.

[22] The Master Funds will not require relief from sections 2(a)(32) and 5(a)(1) because the Master Funds will issue individually redeemable securities.

[23] Applicants state that, in the past, settlements in certain countries, including Russia, have extended to 15 calendar days.

[24] Rule 15c6–1 under the Exchange Act requires that most securities transactions be settled within three business days of the trade date. Applicants acknowledge that no relief obtained from the requirements of section 22(e) will affect any obligations applicants may otherwise have under rule 15c6–1.

[25] Other feeder funds invested in any Master Fund are not seeking, and will not rely on, the section 22(e) relief requested herein.

11. Applicants submit that the concerns underlying section 12(d)(1) of the Act and the potential and actual abuses identified in the Commission's 1966 report to Congress [26] are not present in the proposed transactions and that, in any event, Applicants have proposed a number of conditions to address those concerns, which include concerns about undue influence, excessive layering of fees and overly complex structures.

12. Applicants submit that their proposed conditions address any concerns regarding the potential for undue influence. For instance, the conditions would limit the ability of an Investing Fund's Advisory Group,[27] and Investing Fund's Sub-Advisory Group,[28] to control a Single-Tier Fund within the meaning of Section 2(a)(9) of the Act. The conditions also prohibit Investing Funds and Investing Fund Affiliates [29] from causing an investment by an Investing Fund in a Single-Tier Fund to influence the terms of services or transactions between the Investing Fund or an Investing Fund Affiliate and the Single-Tier Fund or a Single-Tier Fund Affiliate.[30] Applicants also propose a condition to ensure that no Investing Fund or Investing Fund Affiliate will cause a Single-Tier Fund to purchase a security from an Affiliated Underwriting.[31]

13. Applicants propose several conditions to address the potential for excessive layering of fees. Applicants note that the board of directors or trustees of an Investing Management Company, including a majority of the directors or trustees who are not ''interested persons'' within the meaning of section 2(a)(19) of the Act (''non-interested directors or trustees''), will be required to find that any fees charged under the Investing Management Company's advisory contract(s) are based on services provided that will be in addition to, rather than duplicative of, services provided under the advisory contract(s) of any Fund in which the Investing Management Company may invest. Applicants state that any sales charges and/or service fees charged with respect to shares of an Investing Fund will not exceed the limits applicable to a fund of funds set forth in NASD Conduct Rule 2830.[32]

14. Applicants submit that the proposed arrangement will not create an overly complex fund structure. Applicants note that a Single-Tier Fund will be prohibited from acquiring securities of any investment company or company relying on section 3(c)(1) or 3(c)(7) of the Act in excess of the limits contained in section 12(d)(1)(A) of the Act, except to the extent (a) permitted by exemptive relief from the Commission permitting the Single-Tier Fund to acquire shares of other investment companies for short-term cash management purposes or (b) the Single-Tier Fund acquires securities of the Master Fund pursuant to the Master-Feeder Relief.

15. To ensure that an Investing Fund is aware of the terms and conditions of the requested order, the Investing Fund must enter into a Participation Agreement with the respective Single-Tier Fund. The Participation Agreement will include an acknowledgment from the Investing Fund that it may rely on the order only to invest in the Single-Tier Fund and not in any other investment company.

16. Applicants also are seeking relief from Sections 12(d)(1)(A) and 12(d)(1)(B) to the extent necessary to permit the Feeder Funds to perform creations and redemptions of Shares in-kind in a master-feeder structure. Applicants assert that this structure is substantially identical to traditional master-feeder structures permitted pursuant to the exception provided in section 12(d)(1)(E) of the Act. Section 12(d)(1)(E) provides that the percentage limitations of sections 12(d)(1)(A) and (B) will not apply to a security issued by an investment company (in this case, the shares of the applicable Master Fund) if, among other things, that security is the only investment security held in the investing fund's portfolio (in this case, the Feeder Fund's portfolio). Applicants believe the proposed master-feeder structure complies with section 12(d)(1)(E) because each Feeder Fund will hold only investment securities issued by its corresponding Master Fund; however, the Feeder Funds may receive securities other than securities of its corresponding Master Fund if a Feeder Fund accepts an in-kind creation. To the extent that a Feeder Fund may be deemed to be holding both shares of the Master Fund and other securities, applicants request relief from sections 12(d)(1)(A) and (B). The Feeder Funds would operate in compliance with all other provisions of section 12(d)(1)(E).

Section 17(a) of the Act

17. Section 17(a) of the Act generally prohibits an affiliated person of a registered investment company, or an affiliated person of such person (''Second Tier Affiliates''), from selling any security to or purchasing any security from the company. Section 2(a)(3) of the Act defines ''affiliated person'' to include any person directly or indirectly owning, controlling, or holding with power to vote 5% or more of the outstanding voting securities of the other person and any person directly or indirectly controlling, controlled by, or under common control with, the other person. Section 2(a)(9) of the Act provides that a control relationship will be presumed where one person owns more than 25% of another person's voting securities. The Funds may be deemed to be controlled by the Adviser or an entity controlling, controlled by or under common control with the Adviser and hence affiliated persons of each other. In addition, the Funds may be

[26] Report of the Securities and Exchange Commission on the Public Policy Implications of Investment Company Growth, H.R. Rep. No. 2337, 89th Cong., 2d Sess., 311–324.

[27] An ''Investing Fund's Advisory Group'' is the Investing Fund Adviser, Sponsor, any person controlling, controlled by or under common control with the Investing Fund Adviser or Sponsor, and any investment company or issuer that would be an investment company but for section 3(c)(l) or 3(c)(7) of the Act, that is advised or sponsored by the Investing Fund Adviser, Sponsor or any person controlling, controlled by or under common control with the Investing Fund Adviser or Sponsor. In this regard, each Investing Management Company's investment adviser within the meaning of Section 29a)(20)(A) of the Act is the ''Investing Fund Adviser.'' Similarly, each Investing Trust's sponsor is the ''Sponsor.'' Each Investing Fund Adviser will be registered or exempt from registration under the Advisers Act.

[28] An ''Investing Fund's Sub-Advisory Group'' is any Investing Fund Sub-Adviser, any person controlling, controlled by, or under common control with the Investing Fund Sub-Adviser, and any investment company or issuer that would be an investment company but for section 3(c)(l) or 3(c)(7) of the Act (or portion of such investment company or issuer) advised or sponsored by the Investing Fund Sub-Adviser or any person controlling, controlled by or under common control with the Fund of Funds Sub-Adviser.

[29] An ''Investing Fund Affiliate'' is defined as the Investing Fund Adviser, Investing Fund Sub-Adviser(s), any Sponsor, promoter or principal underwriter of an Investing Fund and any person controlling, controlled by or under common control with any of these entities.

[30] A ''Single-Tier Fund Affiliate'' is defined as an investment adviser, promoter or principal underwriter of a Fund and any person controlling, controlled by or under common control with any of these entities.

[31] An ''Affiliated Underwriting'' is an offering of securities during the existence of an underwriting or selling syndicate of which a principal underwriter is an Underwriting Affiliate. An ''Underwriting Affiliate'' is a principal underwriter in any underwriting or selling syndicate that is an officer, director, member of an advisory board, Investing Fund Adviser, Investing Fund Sub-Adviser, Sponsor, or employee of the Investing Fund, or a person of which any such officer, director, member of an advisory board, Investing Fund Adviser, Investing Fund Sub-Adviser, Sponsor, or employee is an affiliated person, except any person whose relationship to the Fund is covered by section 10(f) of the Act is not an Underwriting Affiliate.

[32] Any references to NASD Conduct Rule 2830 include any successor or replacement rule that may be adopted by the Financial Industry Regulatory Authority.

deemed to be under common control with any other registered investment company (or series thereof) advised by the Adviser or an entity controlling, controlled by or under common control with the Adviser (an ''Affiliated Fund'').

18. Applicants request an exemption under sections 6(c) and 17(b) of the Act from sections 17(a)(1) and 17(a)(2) of the Act to permit in-kind purchases and redemptions of Creation Units from the Funds by persons that are affiliated persons or Second Tier Affiliates of the Funds solely by virtue of one or more of the following: (a) Holding 5% or more, or more than 25%, of the Shares of the Trust of one or more Funds; (b) having an affiliation with a person with an ownership interest described in (a); or (c) holding 5% or more, or more than 25%, of the shares of one or more Affiliated Funds. Applicants also request an exemption in order to permit a Single-Tier Fund to sell Shares to and redeem Shares from, and engage in the in-kind transactions that would accompany such sales and redemptions with, an Investing Fund of which a Single-Tier Fund is an affiliated person or Second-Tier Affiliate.[33]

19. Applicants contend that no useful purpose would be served by prohibiting such affiliated persons or Second Tier Affiliates from acquiring or redeeming Creation Units through in-kind transactions. Both the deposit procedures for in-kind purchases of Creation Units and the redemption procedures for in-kind redemptions will be effected in exactly the same manner for all purchases and redemptions. Deposit Instruments and Redemption Instruments will be valued in the same manner as the Portfolio Securities currently held by the relevant Fund. Accordingly, Applicants do not believe that in-kind purchases and redemptions will result in abusive self-dealing or overreaching of the Fund.

20. Applicants also submit that the sale of Shares to and redemption of Shares from an Investing Fund satisfies the standards for relief under sections 17(b) and 6(c) of the Act. Applicants note that any consideration paid for the purchase or redemption of Creation Units directly from a Single-Tier Fund will be based on the NAV of the Single-Tier Fund.[34]

21. In addition, to the extent that a Fund operates in a master-feeder structure, the Applicants also request relief permitting the Feeder Funds to engage in in-kind creations and redemptions with the applicable Master Fund. Applicants state that the request for relief described above would not be sufficient to permit such transactions because the Feeder Funds and the applicable Master Fund could also be affiliated by virtue of having the same investment adviser. However, the applicants believe that in-kind creations and redemptions between a Feeder Fund and a Master Fund advised by the same investment adviser do not involve ''overreaching'' by an affiliated person. Applicants represent that such transactions will occur only at the Feeder Fund's proportionate share of the Master Fund's net assets, and the distributed securities will be valued in the same manner as they are valued for the purposes of calculating the applicable Master Fund's NAV. Further, all such transactions will be effected with respect to pre-determined securities and on the same terms with respect to all investors. Finally, such transaction would only occur as a result of, and to effectuate, a creation or redemption transaction between the Feeder Fund and a third-party investor. Applicants state that, in effect, the Feeder Fund will serve as a conduit through which creation and redemption orders by Authorized Participants will be effected.

22. Applicants believe that: (a) With respect to the relief requested pursuant to section 17(b), the proposed transactions are fair and reasonable, and do not involve overreaching on the part of any person concerned, the proposed transactions are consistent with the policy of each Fund and will be consistent with the investment objectives and policies of each Investing Fund, and the proposed transactions are consistent with the general purposes of the Act; and (b) with respect to the relief requested pursuant to section 6(c), the requested exemption for the proposed transactions is appropriate in the public interest and consistent with the protection of investors and the purposes fairly intended by the policy and provisions of the Act.

Applicants' Conditions

Applicants agree that any order of the Commission granting the requested relief will be subject to the following conditions:

A. Actively Managed Exchange-Traded Relief

1. The requested relief, except for the Fund of Funds Relief and Master-Feeder Relief, will expire on the effective date of any Commission rule under the Act that provides relief permitting the operation of actively managed exchange-traded funds.

2. As long as a Fund operates in reliance on the requested order, the Shares of such Fund will be listed on an Exchange.

3. Neither the Trust nor any Fund will be advertised or marketed as an open-end investment company or a mutual fund. Any advertising material that describes the purchase or sale of the Creation Units or refers to redeemability will prominently disclose that the Shares are not individually redeemable and that owners of Shares may acquire those Shares from the Fund and tender those Shares for redemption to the Fund in Creation Units only.

4. The Web site for the Funds, which is and will be publicly accessible at no charge, will contain, on a per Share basis for each Fund, the prior Business Day's NAV and the market closing price or the Bid/Ask Price of the Shares, and a calculation of the premium or discount of the market closing price or Bid/Ask Price against such NAV.

5. No Adviser or Sub-Adviser, directly or indirectly, will cause any Authorized Participant (or any investor on whose behalf an Authorized Participant may transact with the Fund) to acquire any Deposit Instrument for the Fund through a transaction in which the Fund could not engage directly.

6. On each Business Day, before the commencement of trading in Shares on the Fund's listing Exchange, the Fund will disclose on its Web site the identities and quantities of the Portfolio Securities held by the Fund (or its respective Master Fund) that will form the basis of the Fund's calculation of NAV at the end of the Business Day.

B. Section 12(d)(1) Relief

1. The members of the Investing Fund's Advisory Group will not control (individually or in the aggregate) a Single-Tier Fund (or its respective

[33] Applicants are seeking relief for Single-Tier Funds that are affiliated persons or second tier affiliates of an Investing Fund solely by virtue of one or more of the reasons described. Applicants believe that an Investing Fund generally will purchase Shares in the secondary market and will not purchase or redeem Creation Units directly from a Single-Tier Fund. Nonetheless, an Investing Fund could transact in Creation Units directly with a Single-Tier Fund pursuant to the Section 17(a) relief requested. Applicants are not seeking relief from Section 17(a) for, and the requested relief will not apply to, transactions where a Single-Tier Fund could be deemed an affiliated person, or an affiliated person of an affiliated person of an Investing Fund because an investment adviser to the Funds is also an investment adviser to an Investing Fund.

[34] Applicants acknowledge that the receipt of compensation by (a) an affiliated person of an Investing Fund or an affiliated person of such person, for the purchase by the Investing Fund of Shares or (b) an affiliated person of a Single-Tier Fund, or an affiliated person of such person, for the sale by the Single-Tier Fund of its Shares to an Investing Fund, may be prohibited by section 17(e)(1) of the Act. The Participation Agreement also will include this acknowledgment.

Master Fund) within the meaning of section 2(a)(9) of the Act. The members of the Investing Fund's Sub-Advisory Group will not control (individually or in the aggregate) a Single-Tier Fund (or its respective Master Fund) within the meaning of section 2(a)(9) of the Act. If, as a result of a decrease in the outstanding voting securities of a Single-Tier Fund, the Investing Fund's Advisory Group or the Investing Fund's Sub-Advisory Group, each in the aggregate, becomes a holder of more than 25 percent of the outstanding voting securities of a Single-Tier Fund, it will vote its voting securities of the Single-Tier Fund in the same proportion as the vote of all other holders of the Single-Tier Fund's voting securities. This condition does not apply to the Investing Fund's Sub-Advisory Group with respect to a Single-Tier Fund (or its respective Master Fund) for which the Investing Fund Sub-Adviser or a person controlling, controlled by or under common control with Investing Fund Sub-Adviser acts as the investment adviser within the meaning of section 2(a)(20)(A) of the Act.

2. No Investing Fund or Investing Fund Affiliate will cause any existing or potential investment by the Investing Fund in a Single-Tier Fund to influence the terms of any services or transactions between the Investing Fund or an Investing Fund Affiliate and the Single-Tier Fund (or its respective Master Fund) or a Single-Tier Fund Affiliate.

3. The board of directors or trustees of an Investing Management Company, including a majority of the non-interested directors or trustees, will adopt procedures reasonably designed to ensure that the Investing Fund Adviser and any Investing Fund Sub-Adviser are conducting the investment program of the Investing Management Company without taking into account any consideration received by the Investing Management Company or an Investing Fund Affiliate from a Single-Tier Fund (or its respective Master Fund) or a Single-Tier Fund Affiliate in connection with any services or transactions.

4. Once an investment by an Investing Fund in the securities of a Single-Tier Fund exceeds the limit in section 12(d)(1)(A)(i) of the Act, the Board of the Single-Tier Fund (or its respective Master Fund), including a majority of the non-interested Board members, will determine that any consideration paid by the Single-Tier Fund (or its respective Master Fund) to the Investing Fund or an Investing Fund Affiliate in connection with any services or transactions: (i) Is fair and reasonable in relation to the nature and quality of the services and benefits received by the Single-Tier Fund (or its respective Master Fund); (ii) is within the range of consideration that the Single-Tier Fund (or its respective Master Fund) would be required to pay to another unaffiliated entity in connection with the same services or transactions; and (iii) does not involve overreaching on the part of any person concerned. This condition does not apply with respect to any services or transactions between a Single-Tier Fund (or its respective Master Fund) and its investment adviser(s), or any person controlling, controlled by or under common control with such investment adviser(s).

5. The Investing Fund Adviser, or trustee or Sponsor of an Investing Trust, as applicable, will waive fees otherwise payable to it by the Investing Fund in an amount at least equal to any compensation (including fees received pursuant to any plan adopted by a Single-Tier Fund (or its respective Master Fund) under rule 12b–l under the Act) received from a Single-Tier Fund (or its respective Master Fund) by the Investing Fund Adviser, or trustee or Sponsor of the Investing Trust, or an affiliated person of the Investing Fund Adviser, or trustee or Sponsor of the Investing Trust, other than any advisory fees paid to the Investing Fund Adviser, or trustee or Sponsor of an Investing Trust, or its affiliated person by the Single-Tier Fund (or its respective Master Fund), in connection with the investment by the Investing Fund in the Single-Tier Fund. Any Investing Fund Sub-Adviser will waive fees otherwise payable to the Investing Fund Sub-Adviser, directly or indirectly, by the Investing Management Company in an amount at least equal to any compensation received from a Single-Tier Fund (or its respective Master Fund) by the Investing Fund Sub-Adviser, or an affiliated person of the Investing Fund Sub-Adviser, other than any advisory fees paid to the Investing Fund Sub-Adviser or its affiliated person by the Single-Tier Fund (or its respective Master Fund), in connection with the investment by the Investing Management Company in the Single-Tier Fund made at the direction of the Investing Fund Sub-Adviser. In the event that the Investing Fund Sub-Adviser waives fees, the benefit of the waiver will be passed through to the Investing Management Company.

6. No Investing Fund or Investing Fund Affiliate (except to the extent it is acting in its capacity as an investment adviser to a Fund (or its respective Master Fund)) will cause a Single-Tier Fund (or its respective Master Fund) to purchase a security in an Affiliated Underwriting.

7. The Board of each Single-Tier Fund (or its respective Master Fund), including a majority of the non-interested Board members, will adopt procedures reasonably designed to monitor any purchases of securities by the Single-Tier Fund (or its respective Master Fund) in an Affiliated Underwriting, once an investment by an Investing Fund in the securities of the Single-Tier Fund exceeds the limit of section 12(d)(1)(A)(i) of the Act, including any purchases made directly from an Underwriting Affiliate. The Board will review these purchases periodically, but no less frequently than annually, to determine whether the purchases were influenced by the investment by the Investing Fund in the Single-Tier Fund. The Board will consider, among other things: (i) Whether the purchases were consistent with the investment objectives and policies of the Single-Tier Fund (or its respective Master Fund); (ii) how the performance of securities purchased in an Affiliated Underwriting compares to the performance of comparable securities purchased during a comparable period of time in underwritings other than Affiliated Underwritings or to a benchmark such as a comparable market index; and (iii) whether the amount of securities purchased by the Single-Tier Fund (or its respective Master Fund) in Affiliated Underwritings and the amount purchased directly from an Underwriting Affiliate have changed significantly from prior years. The Board will take any appropriate actions based on its review, including, if appropriate, the institution of procedures designed to ensure that purchases of securities in Affiliated Underwritings are in the best interest of shareholders of the Single-Tier Fund.

8. Each Single-Tier Fund (or its respective Master Fund) will maintain and preserve permanently in an easily accessible place a written copy of the procedures described in the preceding condition, and any modifications to such procedures, and will maintain and preserve for a period of not less than six years from the end of the fiscal year in which any purchase in an Affiliated Underwriting occurred, the first two years in an easily accessible place, a written record of each purchase of securities in Affiliated Underwritings once an investment by an Investing Fund in the securities of the Single-Tier Fund exceeds the limit of section 12(d)(1)(A)(i) of the Act, setting forth from whom the securities were acquired, the identity of the

underwriting syndicate's members, the terms of the purchase, and the information or materials upon which the Board's determinations were made.

9. Before investing in a Single-Tier Fund in excess of the limits in section 12(d)(1)(A), an Investing Fund will execute a Participation Agreement with the Single-Tier Fund stating, without limitation, that their respective boards of directors or trustees and their investment advisers, or trustee and Sponsor, as applicable, understand the terms and conditions of the order, and agree to fulfill their responsibilities under the order. At the time of its investment in Shares of a Single-Tier Fund in excess of the limit in section 12(d)(1)(A)(i), an Investing Fund will notify the Single-Tier Fund of the investment. At such time, the Investing Fund will also transmit to the Single-Tier Fund a list of the names of each Investing Fund Affiliate and Underwriting Affiliate. The Investing Fund will notify the Single-Tier Fund of any changes to the list of the names as soon as reasonably practicable after a change occurs. The Single-Tier Fund and the Investing Fund will maintain and preserve a copy of the order, the Participation Agreement, and the list with any updated information for the duration of the investment and for a period of not less than six years thereafter, the first two years in an easily accessible place.

10. Before approving any advisory contract under section 15 of the Act, the board of directors or trustees of each Investing Management Company including a majority of the non-interested directors or trustees, will find that the advisory fees charged under such contract are based on services provided that will be in addition to, rather than duplicative of, the services provided under the advisory contract(s) of any Single-Tier Fund (or its respective Master Fund) in which the Investing Management Company may invest. These findings and their basis will be recorded fully in the minute books of the appropriate Investing Management Company.

11. Any sales charges and/or service fees with respect to shares of an Investing Fund will not exceed the limits applicable to a fund of funds as set forth in NASD Conduct Rule 2830.

12. No Single-Tier Fund (or its respective Master Fund) will acquire securities of an investment company or company relying on section 3(c)(1) or 3(c)(7) of the Act in excess of the limits contained in section 12(d)(1)(A) of the Act, except to the extent (i) the Single-Tier Fund (or its respective Master Fund) acquires securities of another investment company pursuant to exemptive relief from the Commission permitting the Single-Tier Fund (or its respective Master Fund) to acquire securities of one or more investment companies for short-term cash management purposes, or (ii) the Single-Tier Fund acquires securities of the Master Fund pursuant to the Master-Feeder Relief.

For the Commission, by the Division of Investment Management, under delegated authority.

Kevin M. O'Neill,

Deputy Secretary.

[FR Doc. 2013–09634 Filed 4–23–13; 8:45 am]

BILLING CODE 8011–01–P

SECURITIES AND EXCHANGE COMMISSION

[Release No. IC–30468; File No. 812–14063]

Lincoln National Life Insurance Company, et al; Notice of Application

April 18, 2013

AGENCY: Securities and Exchange Commission (''SEC'' or ''Commission'').

ACTION: Notice of application for an order approving the substitution of certain securities pursuant to Section 26(c) of the Investment Company Act of 1940, as amended (the ''1940 Act'' or ''Act'') and an order of exemption pursuant to Section 17(b) of the Act from Section 17(a) of the Act.

APPLICANTS: Lincoln National Life Insurance Company (''Lincoln Life''), Lincoln National Variable Annuity Account C, Lincoln National Variable Annuity Account L, Lincoln Life Variable Annuity Account N, and Lincoln Life Variable Annuity Account Q, (the ''Lincoln Life Separate Accounts'') and Lincoln Life & Annuity Company of New York (''LNY''), Lincoln Life & Annuity Variable Annuity Account L, and Lincoln New York Account N for Variable Annuities (the ''LNY Separate Accounts,'' and together with the Lincoln Life Separate Accounts, the ''Separate Accounts'') (collectively, the ''Section 26 Applicants''). The Section 26 Applicants and the Lincoln Variable Insurance Products Trust (the ''Trust'') (which is a registered investment company that is an affiliate of the Section 26 Applicants) are collectively referred to in this notice as the ''Section 17 Applicants.'' Lincoln Life and LNY are also referred to as the ''Insurance Companies.''

SUMMARY OF APPLICATION: The Section 26 Applicants seek an order pursuant to Section 26(c) of the 1940 Act, approving the substitution of certain shares of the Trust for shares of other registered investment companies unaffiliated with the Section 26 Applicants (the ''Substitutions'') each of which is currently used as an underlying investment option for certain variable annuity contracts (collectively, the ''Contracts''). The Section 17 Applicants seek an order pursuant to Section 17(b) of the 1940 Act exempting them from Section 17(a) of the Act to the extent necessary to permit them to engage in certain in-kind transactions (''In-Kind Transfers'') in connection with the Substitutions.

FILING DATE: The application was filed on July 25, 2012, and amended and restated applications were filed on November 14, 2012, March 5, 2013, and April 16, 2013.

HEARING OR NOTIFICATION OF HEARING: An order granting the application will be issued unless the Commission orders a hearing. Interested persons may request a hearing by writing to the Secretary of the Commission and serving the Applicants with a copy of the request, personally or by mail. Hearing requests should be received by the Commission by 5:30 p.m. on May 13, 2013, and should be accompanied by proof of service on the Applicants in the form of an affidavit or, for lawyers, a certificate of service. Hearing requests should state the nature of the requester's interest, the reason for the request, and the issues contested. Persons who wish to be notified of a hearing may request notification by writing to the Secretary of the Commission.

ADDRESSES: Secretary, SEC, 100 F Street NE., Washington, DC 20549–1090. Applicants: Lincoln National Life Insurance Company, Lincoln National Variable Annuity Account C, Lincoln National Variable Annuity Account L, Lincoln Life Variable Annuity Account N, Lincoln Life Variable Annuity Account Q, and Lincoln Variable Insurance Products Trust, 1300 South Clinton Street, Fort Wayne, IN 46802; Lincoln Life & Annuity Company of New York, Lincoln Life & Annuity Variable Annuity Account L, and Lincoln New York Account N for Variable Annuities, 100 Madison Street, Suite 1860, Syracuse, NY 13202.

FOR FURTHER INFORMATION CONTACT: Alberto H. Zapata, Senior Counsel, or Joyce M. Pickholz, Branch Chief, Insured Investments Office, Division of Investment Management, at (202) 551–6795.

SUPPLEMENTARY INFORMATION: The following is a summary of the application. The complete application

may be obtained via the Commission's Web site by searching for the file number, or for an applicant using the Company name box, at *http://www.sec.gov/search/search.htm*, or by calling (202) 551–8090.

Applicants' Representations

1. Lincoln Life is the depositor and sponsor of the Lincoln Life Separate Accounts. LNY is the depositor and sponsor of the LNY Separate Accounts.

2. Each of the Separate Accounts is a registered unit investment trust used to issue one or more Contracts issued by the Insurance Companies. Each Separate Account is divided into sub-accounts, each of which invests in the securities of a single underlying mutual fund. The application sets forth the registration statement file numbers for the Contracts and the Separate Accounts.

3. The Trust is organized as a Delaware statutory trust. It is registered as an open-end management investment company under the 1940 Act and its shares are registered under the Securities Act of 1933, on Form N–1A (*see* File Nos. 811–08090 and 033–70742). The Trust is a series investment company and currently offers sixty-four separate series (each a ''Trust Fund''), six of which are involved in the proposed Substitutions (the ''Replacement Funds'').

4. Lincoln Investment Advisors Corporation (''LIAC''), a Delaware corporation and investment adviser registered under the Investment Advisers Act of 1940 currently serves as investment adviser to each of the Trust Funds.

5. The Trust received an exemptive order from the Commission (*In the Matter of Lincoln Investment Advisors Corporation, et al.,* Inv. Co. Rel. No. 29197 (Mar. 31, 2010) File No. 812–13732) (the ''Manager of Managers Order'') that permits LIAC, subject to certain conditions, including approval of the Trust's Board of Trustees, and without the approval of shareholders, to: (i) Select a new Subadviser or additional Subadviser for each Trust Fund; (ii) terminate any existing Subadviser and/or replace the Subadviser; (iii) enter into new sub-advisory agreements and/or materially modify the terms of, or terminate, any existing sub-advisory agreement; and (iv) allocate and reallocate a Trust Fund's assets among one or more Subadvisers.

6. Shares of the Trust are continuously distributed and underwritten by Lincoln Financial Distributors, Inc., an affiliate of the Trust and the Section 26 Applicants. Lincoln Life, also an affiliate of the Trust and the Section 26 Applicants, serves as administrator to the Trust.

7. The Contracts can be issued as individual or group contracts. Contract owners and participants in group contracts (each a ''Contract Owner'') may allocate some or all of their Contract value to one or more sub-accounts available as investment options under the Contract. Additionally, the Contract Owner may, if provided for under the Contract, allocate some or all of their Contract value to a fixed account and/or guaranteed term option, both of which are supported by the assets of Lincoln Life's general account.

8. Each Contract's prospectus contains provisions reserving the Insurance Company's right to substitute shares of one underlying mutual fund for shares of another underlying mutual fund already purchased or to be purchased in the future if either of the following occurs: ''(i) shares of a current underlying mutual fund are no longer available for investment by the Separate Account; or (ii) in the judgment of the Insurance Company's management, further investment in such underlying mutual fund is inappropriate in view of the purposes of the Contract.'' All of the Replacement Funds that correspond to the Existing Funds are currently available as underlying investment options in the Contracts.

9. The Section 26 Applicants request an order from the Commission pursuant to Section 26(c) of the 1940 Act approving the proposed Substitutions of shares of the following series of the Trust, the Replacement Funds, for shares of the corresponding third party, unaffiliated underlying mutual funds, the Existing Funds, as shown in the following table:

Existing funds	Replacement funds
AllianceBernstein Variable Products Series Fund—AllianceBernstein VPS Growth and Income Portfolio:	Lincoln Variable Products Trust—LVIP SSgA S&P 500 Index Fund:
Class A	Standard Class
Class B	Service Class
AllianceBernstein Variable Products Series Fund—AllianceBernstein VPS International Value Portfolio:	Lincoln Variable Insurance Products Trust—LVIP Mondrian International Value Fund:
Class B	Standard Class
Class B	Service Class
American Century Investment Variable Products—American Century VP Inflation Protection Fund:	Lincoln Variable Products Trust—LVIP BlackRock Inflation Protected Bond Fund:
Class I	Standard Class
Class II	Service Class
Dreyfus Stock Index Fund, Inc.—Dreyfus Stock Index Fund:	Lincoln Variable Products Trust—LVIP SSgA S&P 500 Index Fund:
Initial Class	Standard Class
Dreyfus Variable Investment Fund—Dreyfus VIF Opportunistic Small Cap Portfolio:	Lincoln Variable Products Trust—LVIP SSgA Small-Cap Index Fund:
Initial Class	Standard Class
DWS Investments VIT Funds—DWS Equity 500 Index VIP Portfolio:	Lincoln Variable Products Trust—LVIP SSgA S&P 500 Index Fund:
Class A	Standard Class
Class B	Service Class
DWS Investments VIT Funds—DWS Small Cap Index VIP Portfolio:	Lincoln Variable Products Trust—LVIP SSgA Small-Cap Index Fund:
Class A	Standard Class
Class B	Service Class
Fidelity Variable Insurance Products Trust—Fidelity VIP Equity-Income Portfolio:	Lincoln Variable Products Trust—LVIP SSgA S&P 500 Index Fund:
Initial Class	Standard Class
Service Class 2	Service Class
Fidelity Variable Insurance Products Trust—Fidelity VIP Overseas Portfolio:	Lincoln Variable Products Trust—LVIP SSgA International Index Fund:
Initial Class	Service Class

Existing funds	Replacement funds
Service Class 2	Service Class
Franklin Templeton Variable Insurance Products Trust—FTVIPT Franklin Small-Mid Cap Growth Securities Fund:	Lincoln Variable Products Trust—LVIP SSgA Small-Cap Index Fund:
Class 1	Standard Class
Class 2	Service Class
MFS Variable Insurance Trust—MFS VIT Total Return Series:	Lincoln Variable Products Trust—LVIP SSgA Moderate Structured Allocation Fund:
Service Class	Service Class
Neuberger Berman Advisers Management Trust—Neuberger Berman AMT Mid-Cap Growth Portfolio:	Lincoln Variable Products Trust—LVIP SSgA S&P 500 Index Fund:
I Class	Standard Class
I Class	Service Class

The class into which a Contract Owner will be transferred is set forth in the relevant Contract, which lists the class of the Replacement Fund available within the Contract. Comparisons of the investing strategies and risks of the Existing Funds and the Replacement Funds are included in the application.

10. The following tables compare the fees and expenses of the Existing Fund and the Replacement Fund as of December 31, 2012:

	Existing fund	Replacement fund
	AllianceBernstein Variable Products Series Fund—AllianceBernstein VPS Growth and Income Portfolio.	Lincoln Variable Products Trust—LVIP SSgA S&P 500 Index Fund.
Management Fees	0.55% Class A	0.19% Standard Class
	0.55% Class B	0.19% Service Class
12b–1 Fees	0.00% Class A	0.00% Standard Class
	0.25% Class B	0.25% Service Class
Other Expenses	0.05% Class A	0.06% Standard Class
	0.05% Class B	0.06% Service Class
Total Gross Expenses	0.60% Class A	0.25% Standard Class
	0.85% Class B	0.50% Service Class
Waivers/Reimbursements	0.00% Class A	0.00% Standard Class
	0.00% Class B	0.00% Service Class
Total Net Expenses	0.60% Class A	0.25% Standard Class
	0.85% Class B	0.50% Service Class
	AllianceBernstein Variable Products Series Fund—AllianceBernstein VPS International Value Portfolio.	Lincoln Variable Products Trust—LVIP Mondrian International Value Fund.
Management Fees	0.75% Class B	0.75% Standard Class
	0.75% Class B	0.75% Service Class
12b–1 Fees	0.25% Class B	0.00% Standard Class
	0.25% Class B	0.25% Service Class
Other Expenses	0.06% Class B	0.08% Standard Class
	0.06% Class B	0.08% Service Class
Total Gross Expenses	1.06% Class B	0.83% Standard Class
	1.06% Class B	1.08% Service Class
Waivers/Reimbursements	0.00% Class B	0.00% Standard Class
	0.00% Class B	0.00% Service Class
Total Net Expenses	1.06% Class B	0.83% Standard Class
	1.06% Class B	1.08% Service Class
	American Century Investments Variable Products—American Century VP Inflation Protection Fund.	Lincoln Variable Products Trust—LVIP BlackRock Inflation Protected Bond Fund.
Management Fees	0.47% Class I	0.44% Standard Class
	0.47% Class	0.44% Service Class
12b–1 Fees	0.00% Class I	0.00% Standard Class
	0.25% Class II	0.25% Service Class
Other Expenses	0.01% Class I	0.07% Standard Class
	0.01% Class II	0.07% Service Class
Total Gross Expenses	0.48% Class I	0.54% Standard Class
	0.73% Class II	0.79% Service Class
Waivers/Reimbursements	0.00% Class I	0.00% Standard Class
	0.00% Class II	0.00% Service Class
Total Net Expenses	0.48% Class I	0.54% Standard Class
	0.73% Class II	0.79% Service Class

	Existing fund	Replacement fund
	Dreyfus Stock Index Fund, Inc.—Dreyfus Stock Index Fund.	Lincoln Variable Products Trust—LVIP SSgA S&P 500 Index Fund.
Management Fees	0.25% Initial Class	0.19% Standard Class
12b–1 Fees	0.00% Initial Class	0.00% Standard Class
Other Expenses	0.03% Initial Class	0.06% Standard Class
Total Gross Expenses	0.28% Initial Class	0.25% Standard Class
Waivers/Reimbursements	0.00% Initial Class	0.00% Standard Class
Total Net Expenses	0.28% Initial Class	0.25% Standard Class
	Dreyfus Variable Investment Fund—Dreyfus VIF Opportunistic Small Cap Portfolio.	Lincoln Variable Products Trust—LVIP SSgA Small-Cap Index Fund.
Management Fees	0.75% Initial Class	0.32% Standard Class
12b–1 Fees	0.00% Initial Class	0.00% Standard Class
Other Expenses	0.13% Initial Class	0.09% Standard Class
Total Gross Expenses	0.88% Initial Class	0.41% Standard Class
Waivers/Reimbursements	0.00% Initial Class	0.00% Standard Class
Total Net Expenses	0.88% Initial Class	0.41% Standard Class
	DWS Investments VIT Funds—DWS Equity 500 Index VIP Portfolio.	Lincoln Variable Products Trust—LVIP SSgA S&P 500 Index Fund.
Management Fees	0.20% Class A	0.19% Standard Class
	0.20% Class B	0.19% Service Class
12b–1 Fees	0.00% Class A	0.00% Standard Class
	0.25% Class B	0.25% Service Class
Other Expenses	0.15% Class A	0.06% Standard Class
	0.15% Class B	0.06% Service Class
Total Gross Expenses	0.35% Class A	0.25% Standard Class
	0.60% Class B	0.50% Service Class
Waivers/Reimbursements	0.00% Class A	0.00% Standard Class
	0.00% Class B	0.00% Service Class
Total Net Expenses	0.35% Class A	0.25% Standard Class
	0.60% Class B	0.50% Service Class
	DWS Investments VIT Funds—DWS Small Cap Index VIP Portfolio.	Lincoln Variable Products Trust—LVIP SSgA Small-Cap Index Fund.
Management Fees	0.35% Class A	0.32% Standard Class
	0.35% Class B	0.32% Service Class
12b–1 Fees	0.00% Class A	0.00% Standard Class
	0.25% Class B	0.25% Service Class
Other Expenses	0.20% Class A	0.09% Standard Class
	0.20% Class B	0.09% Service Class
Total Gross Expenses	0.55% Class A	0.41% Standard Class
	0.80% Class B	0.66% Service Class
Waivers/Reimbursements	−0.06% Class A	0.00% Standard Class
	−0.06% Class B	0.00% Service Class
Total Net Expenses	0.49% Class A	0.41% Standard Class
	0.74% Class B	0.66% Service Class
	Fidelity® Variable Insurance Products Trust—Fidelity® VIP Equity-Income Portfolio.	Lincoln Variable Products Trust—LVIP SSgA S&P 500 Index Fund.
Management Fees	0.46% Initial Class	0.19% Standard Class
	0.46% Service Class 2	0.19% Service Class
12b–1 Fees	0.00% Initial Class	0.00% Standard Class
	0.25% Service Class 2	0.25% Service Class
Other Expenses	0.10% Initial Class	0.06% Standard Class
	0.10% Service Class 2	0.06% Service Class
Total Gross Expenses	0.56% Initial Class	0.25% Standard Class
	0.81% Service Class 2	0.50% Service Class
Waivers/Reimbursements	0.00% Initial Class	0.00% Standard Class
	0.00% Service Class 2	0.00% Service Class
Total Net Expenses	0.56% Initial Class	0.25% Standard Class
	0.81% Service Class 2	0.50% Service Class
	Fidelity® Variable Insurance Products Trust—Fidelity® VIP Overseas Portfolio.	Lincoln Variable Products Trust—LVIP SSgA International Index Fund.
Management Fees	0.71% Initial Class	0.40% Service Class
	0.71% Service Class 2	0.40% Service Class
12b–1 Fees	0.00% Initial Class	0.25% Service Class
	0.25% Service Class 2	0.25% Service Class

	Existing fund	Replacement fund
Other Expenses	0.14% Initial Class	0.14% Standard Class
	0.14% Service Class 2	0.14% Service Class
Total Gross Expenses	0.85% Initial Class	0.79% Service Class
	1.10% Service Class 2	0.79% Service Class
Waivers/Reimbursements	0.00% Initial Class	−0.04% Service Class
	0.00% Service Class 2	−0.04% Service Class
Total Net Expenses	0.85% Initial Class	0.75% Service Class
	1.10% Service Class 2	0.75% Service Class
	Franklin Templeton Variable Insurance Products Trust—FTVIPT Franklin Small-Mid Cap Growth Securities Fund.	Lincoln Variable Products Trust—LVIP SSgA Small-Cap Index Fund.
Management Fees	0.51% Class 1	0.32% Standard Class
	0.51% Class 2	0.32% Service Class
12b–1 Fees	0.00% Class 1	0.00% Standard Class
	0.25% Class 2	0.25% Service Class
Other Expenses	0.29% Class 1	0.09% Standard Class
	0.29% Class 2	0.09% Service Class
Acquired Fund Fees and Expenses	0.00% Class 1	0.00% Standard Class
	0.00% Class 2	0.00% Service Class
Total Gross Expenses	0.80% Class 1	0.41% Standard Class
	1.05% Class 2	0.66% Service Class
Waivers/Reimbursements	0.00% Class 1	0.00% Standard Class
	0.00% Class 2	0.00% Service Class
Total Net Expenses	0.80% Class 1	0.41% Standard Class
	1.05% Class 2	0.66% Service Class
	MFS Variable Insurance Trust—MFS VIT Total Return Series.	Lincoln Variable Products Trust—LVIP SSgA Moderate Structured Allocation Fund.
Management Fees	0.75% Service Class	0.25% Service Class
12b–1 Fees	0.25% Service Class	0.25% Service Class
Other Expenses	0.05% Service Class	0.04% Service Class
Acquired Fund Fees and Expenses	0.00% Service Class	0.37% Service Class
Total Gross Expenses	1.05% Service Class	0.91% Service Class
Waivers/Reimbursements	−0.03% Service Class	−0.10% Service Class
Total Net Expenses	1.02% Service Class	0.81% Service Class
	Neuberger Berman Advisers Management Trust—Neuberger Berman AMT Mid-Cap Growth Portfolio.	Lincoln Variable Products Trust—LVIP SSgA S&P 500 Index Fund
Management Fees	0.84% Class I	0.19% Standard Class
	0.84% Class I	0.19% Service Class
12b–1 Fees	0.00% Class I	0.00% Standard Class
	0.00% Class I	0.25% Service Class
Other Expenses	0.15% Class I	0.06% Standard Class
	0.15% Class I	0.06% Service Class
Total Gross Expenses	0.99% Class I	0.25% Standard Class
	0.99% Class I	0.50% Service Class
Waivers/Reimbursements	0.00% Class I	0.00% Standard Class
	0.00% Class I	0.00% Service Class
Total Net Expenses	0.99% Class I	0.25% Standard Class
	0.99% Class I	0.50% Service Class

11. The Section 26 Applicants propose the Substitutions as part of a continued and overall business plan by each Insurance Company to make its Contracts more attractive to both existing and prospective Contract Owners, and more efficient to administer and oversee via enhanced flexibility to deliver to the Contract Owners changes that are designed to promote their best interests.

12. The Section 26 Applicants believe that eliminating investment option redundancy via the proposed Substitutions would result in a more consolidated and less confusing menu of investment options for investors. Since the proposed Substitutions involve consolidating duplicative investment options, the diversity of investment options available under the Contracts will not be adversely impacted. Furthermore, this consolidation of investment options would result in greater efficiency in administration of the Contracts because there will be fewer investment options to support, resulting in the availability of resources to apply elsewhere to the Contracts. Finally reducing overlapping investment options gives the Contracts the capacity to add other types of investment options.

13. The Section 26 Applicants submit that the Substitutions will, after implementation, simplify the prospectuses and related materials with respect to the Contracts and the investment options available through the Separate Accounts. By reducing the number of underlying mutual funds and mutual fund companies offered in the

Contracts, the offering Insurance Company necessarily reduces the number of underlying mutual fund prospectuses and prospectus formats the Contract Owner must navigate. By consolidating overlapping investment options into the Trust, the number of mutual fund companies, and varying prospectus formats, is reduced, simplifying the investment decision process for Contract Owners. The Trust Funds employ a common share class structure, a common set of valuation procedures that is administered by a single investment adviser, and the same prospectus style, vocabulary, look and feel. The Section 26 Applicants believe that the proposed Substitutions will continue to provide Contract Owners with access to quality investment managers and a large variety of investment options, but will make the investment decision process more manageable for the investor by having the underlying fund disclosure presented in a consistent format using consistent terminology, making it easier for Contract Owners to analyze fund information and make informed investment decisions relating to allocation of his or her Contract value.

14. Also, the proposed Substitutions involve substituting a Replacement Fund for an Existing Fund with very similar, and in some cases substantially identical, investment objective and investment strategy.

15. Contract Owners with Contract value allocated to the sub-accounts of the Existing Funds will experience the same or lower fund net annual operating expenses after the Substitutions as prior to the Substitutions, except for the following:

Existing funds	Replacement funds
AllianceBernstein Variable Products Series Fund—AllianceBernstein VPS International Value Portfolio:	Lincoln Variable Products Trust—LVIP Mondrian International Value Fund:
Class B	Service Class
American Century Investment Variable Products—American Century VP Inflation Protection Fund:	Lincoln Variable Products Trust—LVIP BlackRock Inflation Protected Bond Fund:
Class I	Standard Class
Class II	Service Class

16. Each Replacement Fund has a combined management fee and 12b–1 Fee that is less than or equal to that of the Existing Fund, except for the DWS Equity 500 Index VIP Portfolio/LVIP SSgA S&P 500 Index Fund substitution in which the combined management and 12b–1 Fees of the Replacement fund could be higher than those of the Existing Fund at certain management fee breakpoints.

17. The Substitutions are designed to provide Contract Owners with the ability to continue their investment in similar investment options without interruption and at no additional cost to them. In this regard, the Insurance Companies have agreed to bear all expenses incurred in connection with the Substitutions and related filings and notices, including legal, accounting, brokerage, and other fees and expenses. Also, the Contract value of each Contract Owner impacted by the Substitutions will not change as a result of the Substitutions.

18. Prospectus supplements (''Pre-Substitution Notices'') were sent to Contract Owners on April 1, 2013. The Pre-Substitution Notices: (i) Notify all Contract Owners of the Insurance Company's intent to implement the Substitutions, that it has filed the application in order to obtain the necessary orders to do so, and indicate the anticipated Substitution Date; (ii) advise Contract Owners that from the date of the Pre-Substitution Notice until the Substitution Date, Contract Owners are permitted to transfer Contract value out of any Existing Fund sub-account to any other sub-account(s) offered under the Contract without the transfer being treated as a transfer for purposes of transfer limitations and fees that would otherwise be applicable under the terms of the Contract; (iii) instruct Contract Owners how to submit transfer requests in light of the proposed Substitutions; (iv) advise Contract Owners that any Contract value remaining in an Existing Fund sub-account on the Substitution Date will be transferred to the corresponding Replacement Fund sub-account, and that the Substitutions will take place at relative net asset value; (v) inform Contract Owners that for at least thirty days following the Substitution Date, the Insurance Companies will permit Contract Owners to make transfers of Contract value out of each Replacement Fund sub-account to any other sub-account(s) offered under the Contract without the transfer being treated as a transfer for purposes of transfer limitations and fees that would otherwise be applicable under the terms of the Contract; and (vi) inform Contract Owners that, except as described in the market timing/short-term trading provision of the relevant prospectus, the respective Insurance Company will not exercise any rights reserved by it under the Contracts to impose additional restrictions on transfers out of a Replacement Fund for at least thirty days after the Substitution Date. Existing Contract Owners will receive the Pre-Substitution Notice and the prospectus for the Replacement Fund before the Substitution Date, if they have not already received such information. The prospectus for the Replacement Fund will disclose and explain the substance and effect of the Manager of Managers Order. New purchasers of the Contracts will be provided the Pre-Substitution Notice, the Contract prospectus and the prospectus for the Replacement Funds in accordance with all applicable legal requirements. Prospective purchasers of the Contracts will be provided the Pre-Substitution Notice and the Contract prospectus.

19. In addition to the Pre-Substitution Notice distributed to Contract Owners, within five business days after the Substitution Date, Contract Owners will be sent a written confirmation of the Substitutions in accordance with Rule 10b–10 under the Securities Exchange Act of 1934. The confirmation statement will restate the information set forth in the Pre-Substitution Notice.

20. As of the Substitution Date, a portion of the securities of the Existing Funds will be redeemed in kind and those securities received will be used to purchase shares of the Replacement Funds. The redemption of each Existing Fund's shares and repurchase of the corresponding Replacement Fund's shares will be effected and take place at relative net asset value determined on the Substitution Date pursuant to Section 22 of the 1940 Act and Rule 22c–1 thereunder with no change in the amount of any Contract Owner's Contract value, cash value, death benefit, or dollar value of his or her investment in the Separate Accounts and without such transactions counting as a transfer for purposes of transfer limitations and fees that would otherwise be applicable under the terms

of the Contracts. Each Substitution will be effected by redeeming shares of the Existing Fund in cash and/or in-kind on the Substitution Date at their net asset value. In the event that either LIAC or the relevant Subadviser of a Replacement Fund declines to accept, on behalf of the Replacement Fund, securities redeemed in-kind by an Existing Fund, such Existing Fund shall instead provide cash equal to the value of the declined securities so that Contract Owners' Contract values will not be adversely impacted or diluted. Each Substitution will be effected by redeeming shares of Existing Funds in cash and/or in kind on the Substitution Date and using the proceeds of those redemptions to purchase shares of the Replacement Funds. Therefore, simultaneous to the redemption of the Existing Fund's shares, all the proceeds of such redemptions shall be used to purchase shares of the Replacement Fund at their net asset value so that each Contract Owner's Contract value will remain fully invested at all times.

21. Contract Owners will not incur any fees or charges as a result of the proposed Substitutions, nor will their rights or insurance benefits or the Insurance Companies' obligations under the Contracts be altered in any way. All expenses incurred in connection with the proposed Substitutions, including any brokerage, legal, accounting, and other fees and expenses, will be paid by the Insurance Companies. In addition, the Substitutions will not result in adverse tax consequences to Contract Owners and will not alter any tax benefits associated with the Contracts. The proposed Substitutions will not cause the Contract fees and charges currently being paid by Contract Owners to be greater after the proposed Substitution than before the proposed Substitution. Redemptions and repurchases that occur in connection with effecting the Substitution will not count as a transfer for purposes of transfer limitations and fees that would otherwise be applicable under the terms of the Contracts. Consequently, no fees will be charged on transfers made to effectuate the Substitutions.

22. The Section 26 Applicants represent that, after the Substitution Date, the Replacement Funds will not change a Subadviser, add a new Subadviser, or otherwise rely on the Manager of Managers Order without first obtaining shareholder approval of the change in Subadviser, the new Subadviser, or the Fund's ability to add or to replace a Subadviser in reliance on the Manager of Managers Order. Additionally, the Section 26 Applicants represent that a prospectus for the relevant Replacement Fund(s) containing disclosure describing the existence, substance, and effect of the Manager of Managers Order will have been provided to each Contract Owner prior to the Substitution Date.

Legal Analysis and Conditions

Section 26(c) Relief

1. The Section 26 Applicants request that the Commission issue an order pursuant to Section 26(c) of the 1940 Act approving the proposed substitutions. Section 26(c) of the 1940 Act makes it unlawful for the depositor of a registered unit investment trust that invests in the securities of a single issuer to substitute another security for such security without Commission approval.

2. The Section 26 Applicants have reserved the right under the Contracts to substitute shares of another underlying mutual fund for one of the current underlying mutual funds offered as an investment option under the Contracts. The Contract prospectuses disclose this right.

3. Each Replacement Fund and its corresponding Existing Fund have similar, and in some cases substantially similar or identical, investment objectives and strategies. In addition, each proposed Substitution retains for Contract Owners the investment flexibility and expertise in asset management, which are core investment features of the Contracts. Any impact on the investment programs of affected Contract Owners should be negligible.

4. In each Substitution, except the DWS Equity 500 Index VIP Portfolio/LVIP SSgA 500 Index Fund substitutions, the Replacement Fund has a combined management fee and 12b–1 Fee that is less than or equal to that of the Existing Fund. Except with respect to the AllianceBernstein VPS International Value Portfolio/LVIP Mondrian International Value Fund, and American Century VP Inflation Protection Fund/LVIP BlackRock Inflation Protected Bond Fund, Contract Owners with Contracts value allocated to the sub-accounts of the Existing Funds will experience the same or lower fund net annual operating expenses after the Substitutions as prior to the Substitutions.

5. Section 26 Applicants agree that for a period of two years following the Substitution date and for those Contracts with assets allocated to the Existing Fund on the date of the Substitution, the Insurance Companies will reimburse, on the last business day of each fiscal quarter, the contract owners whose sub-accounts invest in the applicable Replacement Fund to the extent that the Replacement Fund's net annual operating expenses for such period exceeds, on an annualized basis, the net annual operating expenses of the Existing Fund for fiscal year 2012, except with respect to the DWS Equity 500 Index VIP Portfolio/LVIP SSgA S&P 500 Index Fund substitution. With respect to the DWS Equity 500 Index VIP Portfolio/LVIP SSgA S&P 500 Index Fund substitution, the reimbursement agreement with respect to the Replacement Fund's net annual operating expenses will extend for the life of each Contract outstanding on the date of the proposed Substitutions.

6. In addition, the Section 26 Applicants agree that, except with respect to the DWS Equity 500 Index VIP Portfolio/LVIP SSgA S&P 500 Index Fund, the Insurance Companies will not increase total separate account charges (net of any reimbursements or waivers) for any existing owner of the Contracts on the date of the Substitutions for a period of two (2) years from the date of the Substitutions. With respect to the DWS Equity 500 Index VIP Portfolio/LVIP SSgA S&P 500 Index Fund substitution, the agreement not to increase the separate account charges will extend for the life of each Contract outstanding on the date of the proposed Substitutions.

7. The Section 26 Applicants submit that the proposed Substitutions are not of the type that Section 26 was designed to prevent: Overreaching on the part of the depositor by permanently impacting the investment allocations of the entire trust. In the current situation, the Contracts provide Contract Owners with investment discretion to allocate and reallocate their Contract value among the available underlying mutual funds. This flexibility provides Contract Owners with the ability to reallocate their assets at any time—either before the Substitution Date, or after the Substitution Date—if they do not wish to invest in the Replacement Fund. Thus, the likelihood of being invested in an undesired underlying mutual fund is minimized, with the discretion remaining with the Contract Owners. The Substitutions, therefore, will not result in the type of costly forced redemption that Section 26(c) was designed to prevent. The Section 26 Applicants submit that, for all the reasons stated above, the proposed Substitutions are consistent with the protection of investors and the purposes fairly intended by the policy and provisions of the 1940 Act.

Section 17(b) Relief

1. The Section 17 Applicants request that the Commission issue an order pursuant to Section 17(b) of the 1940 Act exempting them from the provisions of Section 17(a) of the 1940 Act to the extent necessary to permit them to carry out the In-Kind Transactions.

2. Section 17(a)(1) of the 1940 Act, in relevant part, generally prohibits any affiliated person of a registered investment company (or any affiliated person of such a person), acting as principal, from knowingly selling any security or other property to that company. Section 17(a)(2) of the 1940 Act generally prohibits the same persons, acting as principals, from knowingly purchasing any security or other property from the registered investment company.

3. Shares held by an insurance company separate account are legally owned by the insurance company. Thus, the Insurance Companies collectively own substantially all of the shares of the Trust. Accordingly, the Trust and its respective Trust Funds are arguably under the control of the Insurance Companies, as per Section 2(a)(9) of the 1940 Act (notwithstanding the fact that the Contract Owners are the beneficial owners of those Separate Account shares). If the Trust is under the common control of the Insurance Companies, then each Insurance Company is an affiliated person of the Trust and its respective Trust Funds. If the Trust and its respective Trust Funds are under the control of the Insurance Companies, then the Trust and its respective affiliates are affiliated persons of the Insurance Companies. Regardless of whether or not the Insurance Companies can be considered to actually control the Trust and its Trust Funds, because the Insurance Companies and their affiliates own of record more than 5% of the shares of each Trust Fund and are under common control with LIAC, the Insurance Companies are affiliated persons of the Trust and its Trust Funds. Likewise, the Trust and its respective Trust Funds are each an affiliated person of the Insurance Companies. The proposed In-Kind Transactions could be seen as the indirect purchase of shares of certain Replacement Funds with portfolio securities of certain Existing Funds and the indirect sale of portfolio securities of certain Existing Funds for shares of certain Replacement Funds. Pursuant to this analysis, the proposed In-Kind Transactions also could be categorized as a purchase of shares of certain Replacement Funds by certain Existing Funds, acting as principal, and a sale of portfolio securities by certain Existing Funds, acting as principal, to certain Replacement Funds. In addition, the proposed In-Kind Transactions could be viewed as a purchase of securities from certain Existing Portfolios, and a sale of securities to certain Replacement Funds, by the Insurance Companies (or their Separate Accounts), acting as principal. If categorized in this manner, the proposed In-Kind Transactions may be deemed to contravene Section 17(a) due to the affiliated status of these participants.

4. The Section 17 Applicants submit that the In-Kind Transactions, as described in the application, meet the conditions set forth in Section 17(b) of the 1940 Act.

5. Contract Owners' Contract values will not be adversely impacted or diluted because the In-Kind Transactions will be effected at the respective net asset values of the Existing Funds and the Replacement Funds, as described in each fund's registration statement and as required by Rule 22c–1 under the 1940 Act. The In-Kind Transactions will not change the dollar value of any Contract, the accumulation unit value or annuity unit value of any Contract, or the death benefit payable under any Contract. After the In-Kind Transactions, the value of a Separate Account's investment in a Replacement Fund will equal the value of its investments in the corresponding Existing Fund (in addition to any pre-existing investment in the Replacement Fund) before the In-Kind Transactions.

6. Additionally, the Section 17 Applicants will cause the In-Kind Transactions to be implemented in compliance with the conditions set forth in Rule 17a-7 under the 1940 Act, except that the consideration paid for the securities being purchased or sold will not be in cash.

7. The proposed In-Kind Transactions will be effected based upon the independent current market price of the portfolio securities as specified in Rule 17a–7(b). Because, per the terms of Rule 17a–7(a), Rule 17a–7 is available only with respect to securities for which market quotations are readily available, the proposed In-Kind Transactions will include only securities for which market quotations are readily available on the Substitution Date. Further, the proposed In-Kind Transactions will be consistent with the policy of each registered investment company and separate series thereof participating in the In-Kind Transactions, as recited in the relevant registered investment company's registration statement and reports in accordance with Rule 17a–7(c). No brokerage commission, fee (except for any customary transfer fees), or other remuneration will be paid in connection with the proposed In-Kind Transactions as specified in Rule 17a–7(d). The Trust's Board of Trustees has adopted and implemented the fund governance and oversight procedures as required by Rule 17a–7(e) and (f). In addition, pursuant to Rule 17a–7(e)(3), during the calendar quarter following the quarter in which any In-Kind Transactions occur, the Trust's Board of Trustees will review reports submitted by LIAC in respect of such In-Kind Transactions in order to determine that all such In-Kind Transactions made during the preceding quarter were effected in accordance with the representations stated herein. Finally, a written record of the procedures for the proposed In-Kind Transactions will be maintained and preserved in accordance with Rule 17a–7(g).

Although the proposed In-Kind Transactions will not comply with the cash consideration requirement of Rule 17a–7(a), the terms of the proposed In-Kind Transactions will offer to each of the relevant Existing Funds and each of the relevant Replacement Funds the same degree of protection from overreaching that Rule 17a–7 generally provides in connection with the purchase and sale of securities under that Rule in the ordinary course of business. Specifically, the Insurance Companies and their affiliates cannot effect the proposed In-Kind Transactions at a price that is disadvantageous to any Replacement Fund and the proposed In-Kind Transactions will not occur absent an exemptive order from the Commission.

8. For those Existing Funds that will redeem their shares in-kind as part of the In-Kind Transactions, such transactions will be consistent with the investment policies of the Existing Fund because: (1) The redemption in-kind policy is stated in the relevant Existing Fund's current registration statement; and (2) the shares will be redeemed at their net asset value in conformity with Rule 22c–1 under the 1940 Act. In addition, to the extent applicable to the Section 17 Applicants as affiliated persons redeeming in-kind from an Existing Fund, the Section 17 Applicants will comply with the Commission's no-action letter issued to *Signature Financial Group, Inc.* (pub. avail. Dec. 28, 1999). Likewise, for the Replacement Funds that will sell shares in exchange for portfolio securities as part of the In-Kind Transactions, such transactions will be consistent with the investment policies of the Replacement Fund because: (1) The Trust's policy of

selling shares in exchange for investment securities is stated in the Trust's current registration statement; (2) the shares will be sold at their net asset value in conformity with Rule 22c–1 under the Act; and (3) the investment securities will be of the type and quality that a Replacement Fund could have acquired with the proceeds from the sale of its shares had the shares been sold for cash. For each of the proposed In-Kind Transactions, LIAC and the relevant Subadviser(s) will analyze the portfolio securities being offered to each relevant Replacement Fund and will retain only those securities that it would have acquired for each such Fund in a cash transaction.

9. The Section 17 Applicants submit that, for all the reasons stated above: (1) The terms of the proposed In-Kind Transactions, including the consideration to be paid and received, are reasonable and fair to each of the relevant Replacement Funds, each of the relevant Existing Funds, and Contract Owners, and that the proposed In-Kind Transactions do not involve overreaching on the part of any person concerned; (2) the proposed In-Kind Transactions are, or will be, consistent with the policies of the relevant Replacement Funds and the relevant Existing Funds as stated in the relevant investment company's registration statement and reports filed under the 1940 Act; and (3) the proposed In-Kind Transactions are, or will be, consistent with the general purposes of the 1940 Act. The Section 17 Applicants maintain that the proposed In-Kind Transactions, as described herein, are consistent with the general purposes of the 1940 Act set forth in Section 1 of the 1940 Act. In particular, the proposed In-Kind Transactions do not present any conditions or abuses that the 1940 Act was designed to prevent.

Conclusion

For the reasons set forth in the application, the Applicants submit that the proposed Substitutions and related transactions meet the standards of Section 26(c) of the 1940 Act and are consistent with the standards of Section 17(b) of the 1940 Act and that the requested orders should be granted.

For the Commission, by the Division of Investment Management, under delegated authority.

Kevin M. O'Neill,

Deputy Secretary.

[FR Doc. 2013–09633 Filed 4–23–13; 8:45 am]

BILLING CODE 8011–01–P

SECURITIES AND EXCHANGE COMMISSION

[Release No. 34–69403; File No. SR–OCC–2013–02]

Self-Regulatory Organizations; The Options Clearing Corporation; Order Approving Proposed Rule Change To Implement a Revised Method of Calculating Clearing Members' Respective Contributions to OCC's Clearing Fund

April 18, 2013.

I. Introduction

On February 19, 2013 The Options Clearing Corporation (''OCC'') filed with the Securities and Exchange Commission (''Commission'') the proposed rule change SR–OCC–2013–02 pursuant to Section 19(b)(1) of the Securities Exchange Act of 1934 (''Act'')[1] and Rule 19b-4 thereunder.[2] The proposed rule change was published for comment in the **Federal Register** on March 8, 2013.[3] The Commission received no comment letters. This order approves the proposed rule change.

II. Description of the Proposed Rule Change

The purpose of this proposed rule change is to revise OCC's By-Laws and Rules to implement a revised method of calculating Clearing Members' contributions to OCC's Clearing Fund. Currently, Clearing Members contribute to the Clearing Fund in proportion to average daily open interest, i.e., the total number of cleared contracts and open positions plus units of stock underlying open stock loan or borrow positions, over the calendar month preceding the date of calculation, subject to a $150,000 minimum contribution.

OCC has developed a new allocation formula that it believes will equitably allocate contributions among its Clearing Members based on each Clearing Member's particular activities and use of OCC's facilities.[4] The revised formula will include the following components and weights: (1) Open interest (50% of total); (2) total risk charge (35% of total); and (3) volume (15% of total).[5]

The total risk charge is intended to measure the economic significance of the activities of a Clearing Member. The total risk charge is equal to the margin requirement, as determined by OCC, of the accounts of the Clearing Member exclusive of the net asset value of those accounts. OCC notes that a range of factors influence the relationship between the open interest in a Clearing Member's account and its associated risk charge. For example, for each Clearing Member these factors include, but are not limited to, the types of positions, number of long positions versus short positions, value of the securities underlying the contracts, volatility of the underlying, diversification, number of accounts of the Clearing Member, and the extent to which the Clearing Member's options positions are in-the-money or out-of-the-money.

Volume, like open interest, is a measure of a Clearing Member's level of usage of OCC's facilities. However, volume is distinct from open interest in that it is a function of the average turnover of the positions in the Clearing Member's account. Therefore, according to OCC, market-making, high frequency trading, and execution-only services are all examples of activities that might elevate volume relative to open interest. By contrast, holding long term positions in long term contracts is an example of activity that might lower a Clearing Member's volume relative to its open interest.

OCC believes that its proposed allocation formula is preferable to its current formula because, by incorporating measurements of volume and certain risk charges, it will apportion contributions based on more sophisticated measurements of Clearing Members' usage of OCC's facilities and recognize demands on OCC's services and facilities that are not captured by open interest alone.

OCC believes it is appropriate for open interest to continue to serve as the most heavily weighted component because open interest, generally speaking, is a measure of a Clearing Member's overall usage of OCC's facilities. The definition of open interest in proposed Rule 1001(d) is different than the definition of open interest in existing Rule 1001(b), which OCC is deleting, in a non-material way as a result of the use of the defined term ''cleared contract'' in proposed Rule 1001(d) instead of specifically naming the individual types of contracts that make up ''cleared contracts.''

[1] 15 U.S.C. 78s(b)(1).

[2] 17 CFR 240.19b–4.

[3] Securities Exchange Act Release No. 34–69026 (March 4, 2013), 78 FR 15088 (March 8, 2013).

[4] OCC believes the new allocation formula generally reflects similar practices that are in place at the other clearing agencies registered with the Commission. See supra note 3, Securities Exchange Act Release No. 34–69026 (March 4, 2013), 78 FR 15088 (March 8, 2013).

[5] Because Execution-Only Clearing Members do not clear their own trades, the measure of volume applicable to them would be executed volume rather than cleared volume.

OCC also believes that risk and volume are relevant factors because they distinctly measure material aspects of clearance and settlement activity and therefore a Clearing Member's use of OCC's resources. OCC notes that Clearing Members whose OCC accounts contain positions that are well-diversified and/or exhibit relatively little exposure to overall market direction will likely have a smaller required contribution under the proposed formula. Clearing Members exhibiting a relatively large exposure to market direction, a concentration in contracts that individually present high amounts of risk, and undiversified accounts will generally experience a larger required contribution than is the case under the current formula.

OCC notes that most Clearing Member Groups[6] will experience a material change (i.e., an increase or decrease of 10% or greater in the dollar amount of a Clearing Member Group's aggregated Clearing Fund requirement) under the new formula. OCC notes that smaller single firms with lower initial Clearing Fund requirements may experience an increase under the new allocation formula because (i) they may have portfolios lacking the diversification that lowers the risk compared with open interest for larger firms, and (ii) the new formula adds a Clearing Fund share on top of the $150,000 minimum as opposed to instead of it.

The Clearing Fund requirements under the new allocation formula will be communicated to Clearing Members with significant lead time to allow Clearing Members to review and prepare for any changes they may experience in their specific Clearing Fund contribution amount. OCC will contact those Clearing Members that will be negatively impacted in a material manner (i.e., an increase of 10% or greater in the dollar amount of a Clearing Member Group's aggregate Clearing Fund requirement) to confirm such Clearing Members have reviewed the pro forma Clearing Fund requirement numbers and they are ready to meet the new requirement upon implementation. OCC will then begin a two stage phase in process for the new Clearing Fund requirements. The first stage of implementation will occur within 180 calendar days from the date that OCC provides notice to Clearing Members of its intent to implement the new formula. At that stage, open interest, total risk charge, and volume will be applied in the formula with weightings of 75%, 17.5%, and 7.5%, respectively. The second stage of implementation and the final weightings of 50%, 35%, and 15% will then be implemented within 360 days from the same date of the original notice to Clearing Members concerning implementation of the new formula.

The proposed rule change will also create a defined term in OCC's By-Laws, ''Futures-Only Affiliated Clearing Member,'' to refer to a Clearing Member that is admitted solely for the purpose of clearing transactions in security futures, commodity futures, and/or futures options.[7] While the definition is new, there will be no substantive change to Section 2 of Article VIII, under which, if such a Clearing Member is a member affiliate of an earlier-admitted Clearing Member, the Clearing Member's initial Clearing Fund contribution may be fixed by the Board as an amount that excludes the minimum Clearing Fund component of $150,000, so long as the earlier-admitted Clearing Member already satisfies that requirement.

III. Discussion

Section 19(b)(2)(C) of the Act[8] directs the Commission to approve a proposed rule change of a self-regulatory organization if it finds that such proposed rule change is consistent with the requirements of the Act and the rules and regulations thereunder applicable to such organization. Section 17A(b)(3)(F) of the Act[9] requires, among other things, that the rules of a clearing agency are designed to promote the prompt and accurate clearance and settlement of securities transactions, and to the extent applicable derivative agreements, contracts, and transactions, to assure the safeguarding of securities and funds which are in the custody or control of the clearing agency or for which it is responsible, and to protect investors and the public interest. Section 17A(b)(3)(D) of the Act[10] requires that the rules of the clearing agency provide for the equitable allocation of reasonable dues, fees, and other charges among its participants. Rule 17Ad–22(b)(2)[11] requires a registered clearing agency that performs central counterparty services to establish, implement, maintain, and enforce written policies and procedures reasonably designed to use risk-based models and parameters to set margin requirements and review such margin requirements and the related risk-based models and parameters at least monthly.

The proposed rule change accomplishes these purposes by enhancing the Clearing Fund allocation methodology by incorporating measures that OCC believes will apportion contributions based on more sophisticated measurements of Clearing Members' usage of OCC's facilities and recognize demands on OCC's services and facilities that are not captured by the current methodology.

IV. Conclusion

On the basis of the foregoing, the Commission finds that the proposal is consistent with the requirements of the Act and in particular with the requirements of Section 17A of the Act[12] and the rules and regulations thereunder.

It is therefore ordered, pursuant to Section 19(b)(2) of the Act,[13] that the proposed rule change (File No. SR–OCC–2013–02) be and hereby is APPROVED.[14]

For the Commission by the Division of Trading and Markets, pursuant to delegated authority.[15]

Kevin M. O'Neill,

Deputy Secretary.

[FR Doc. 2013–09632 Filed 4–23–13; 8:45 am]

BILLING CODE 8011–01–P

[6] The term ''Clearing Member Group'' is defined in Article I, Section 1 of OCC's By-Laws as ''a Clearing Member and any Member Affiliates of such Clearing Member.''

[7] Article VIII, Section 2 of OCC's By-Laws actually refers also to ''commodity options,'' but options directly on an underlying commodity—as opposed to options on futures—are now included in Section 1a(47) of the Commodity Exchange Act to fall within the definition of a ''swap.'' 7 U.S.C. 1a(47). Since OCC does not currently have rules for the clearing of swaps, the reference to commodity options is being omitted from the new definition.

[8] 15 U.S.C. 78s(b)(2)(C).

[9] 15 U.S.C. 78q–1(b)(3)(F).

[10] 15 U.S.C. 78q–1(b)(3)(D).

[11] 17 CFR 240.17Ad–22(b)(3).

[12] 15 U.S.C. 78q–1.

[13] 15 U.S.C. 78s(b)(2).

[14] In approving the proposed rule change, the Commission considered the proposal's impact on efficiency, competition, and capital formation. 15 U.S.C. 78c(f).

[15] 17 CFR 200.30–3(a)(12).

SECURITIES AND EXCHANGE COMMISSION

[Release No. 34–69399; File No. SR–CBOE–2013–039]

Self-Regulatory Organizations; NYSE Arca, Inc.; Chicago Board Options Exchange, Incorporated; Notice of Filing and Immediate Effectiveness of a Proposed Rule Change Relating to Fees for the BBO Data Feed for Securities Traded on the CBOE Stock Exchange

April 18, 2013.

Pursuant to Section 19(b)(1) of the Securities Exchange Act of 1934 (the

''Act''),[1] and Rule 19b–4 thereunder,[2] notice is hereby given that on April 5, 2013, Chicago Board Options Exchange, Incorporated (the ''Exchange'' or ''CBOE'') filed with the Securities and Exchange Commission (the ''Commission'') the proposed rule change as described in Items I, II, and III below, which Items have been prepared by the Exchange. The Commission is publishing this notice to solicit comments on the proposed rule change from interested persons.

I. Self-Regulatory Organization's Statement of the Terms of Substance of the Proposed Rule Change

Chicago Board Options Exchange, Incorporated (the ''Exchange'' or ''CBOE'') proposes to amend the fee schedule of Market Data Express, LLC (''MDX''), an affiliate of CBOE, for the BBO Data Feed (''CBSX BBO Data Feed'' or ''Data'') for securities traded on the CBOE Stock Exchange (''CBSX''). The text of the proposed rule change is available on the Exchange's Web site (*http://www.cboe.com/AboutCBOE/CBOELegalRegulatoryHome.aspx*), at the Exchange's Office of the Secretary, and at the Commission's Public Reference Room.

II. Self-Regulatory Organization's Statement of the Purpose of, and Statutory Basis for, the Proposed Rule Change

In its filing with the Commission, the Exchange included statements concerning the purpose of and basis for the proposed rule change and discussed any comments it received on the proposed rule change. The text of these statements may be examined at the places specified in Item IV below. The Exchange has prepared summaries, set forth in sections A, B, and C below, of the most significant aspects of such statements.

A. Self-Regulatory Organization's Statement of the Purpose of, and Statutory Basis for, the Proposed Rule Change

1. Purpose

The purpose of the proposed rule change is to amend the fees charged by MDX for the CBSX BBO Data Feed and to make a few clarifying changes to the MDX fee schedule.[3] CBSX is CBOE's stock trading facility.

The CBSX BBO Data Feed is a real-time, low latency data feed that includes CBSX ''BBO data'' and last sale data.[4] CBOE reports CBSX BBO data under the Consolidated Quotation Plan (''CQ Plan'') and CBSX last sale data under the Consolidated Tape Association Plan (''CTA Plan'') with respect to NYSE-listed securities and securities listed on exchanges other than NYSE and Nasdaq for inclusion in those Plans' consolidated data streams. CBOE reports CBSX BBO data and CBSX last sale data under the Nasdaq Unlisted Trading Privileges Plan (''Nasdaq/UTP Plan'') with respect to Nasdaq-listed securities for inclusion in that Plan's consolidated data stream. The BBO and last sale data contained in the CBSX BBO Data Feed is identical to the data that CBOE sends to the processors under the CQ, CTA and Nasdaq/UTP Plans for redistribution to the public.[5]

The CBSX BBO Data Feed also includes certain data that is not included in the data sent to the processors under the CQ, CTA and Nasdaq/UTP Plans, namely, totals of customer versus non-customer contracts at the BBO, and All-or-None contingency orders priced better than or equal to the BBO.

MDX currently charges Customers a ''direct connect fee'' of $500 per connection per month and a ''per user fee'' of $25 per month per ''Authorized User'' or ''Device'' for receipt of the CBSX BBO Data Feed by Subscribers.[6] Either a CBSX Trading Permit Holder or a non-CBSX Trading Permit Holder may be a Customer. All Customers are assessed the same fees.

The Exchange proposes to eliminate both the direct connect fee and the per user fee and replace them with a ''data fee'', payable by a Customer, of $500 per month for internal use and external redistribution of the CBSX BBO Data Feed. A ''Customer'' is any entity that receives the CBSX BBO Data Feed directly from MDX's system or through a connection to MDX provided by an approved redistributor (i.e., a market data vendor or an extranet service provider) and then distributes it internally and/or externally. The data fee would entitle a Customer to provide the CBSX BBO Data Feed to an unlimited number of internal users and Devices within the Customer. The data fee would also entitle a Customer to distribute externally the CBSX BBO Data Feed to other Customers. A Customer receiving the CBSX BBO Data Feed from another Customer would be assessed the data fee by MDX and would be entitled to distribute the Data internally and/or externally.[7] All Customers would have the same rights to utilize the Data (i.e., distribute the Data internally and/or externally) as long as the Customer has entered into an agreement with MDX for the Data and pays the data fee. Either a CBSX Trading Permit Holder or a non-CBSX Trading Permit Holder may be a Customer.

The Exchange also proposes to make a few clarifying changes to the MDX fee schedule. The Exchange proposes to create a separate Definitions section on the fee schedule. The Exchange proposes to clarify that MDX will not charge the data fee for any calendar month in which a Customer commences receipt of Data after the 15th day of the month or discontinues receipt of the Data before the 15th day of the month. The Exchange also proposes to include in the MDX fee schedule provisions relating to invoicing and late payments. Lastly, the Exchange proposes to remove the definition of per user fee from the MDX fee schedule consistent with the elimination of that fee.

2. Statutory Basis

The Exchange believes that the proposed rule change is consistent with the requirements of Section 6(b) of the Securities Exchange Act of 1934 (''Act'')[8] in general, and, in particular, with Section 6(b)(4) of the Act[9] in that it provides for the equitable allocation of reasonable dues, fees and other charges among users and recipients of

[1] U.S.C. 785(b)(1).

[2] 17 CFR 240.19b–4.

[3] The CBSX BBO Data Feed and the fees charged by MDX for the CBSX BBO Data Feed were established in March 2011. See Securities Exchange Act Release No. 63998 (March 1, 2011), 76 FR 12384 (March 7, 2011).

[4] The CBSX BBO Data Feed includes the ''best bid and offer,'' or ''BBO'', consisting of all outstanding quotes and standing orders at the best available price level on each side of the market, with aggregate size (''BBO data,'' sometimes referred to as ''top-of-book data''). Data with respect to executed trades is referred to as ''last sale'' data.

[5] The Exchange notes that MDX makes available to Customers the BBO data and last sale data that is included in the CBSX BBO Data Feed no earlier than the time at which the Exchange sends that data to the processors under the CQ, CTA and Nasdaq.UTP Plans. A ''Customer'' is any entity that receives the CBSX BBO Data Feed directly from MDX's system and then distributes it either internally or externally to Subscribers. A ''Subscriber'' is a person (other than an employee of a Customer) that receives the CBSX BBO Data Feed from a Customer for its own internal use.

[6] An ''Authorized User'' is defined as an individual user (an individual human being) who is uniquely identified (by user ID and confidential password or other unambiguous method reasonably acceptable to MDX) and authorized by a Customer to access the CBSX BBO Data Feed supplied by the Customer. A ''Device'' is defined as any computer, workstation or other item of equipment, fixed or portable, that receives, accesses and/or displays data in visual, audible or other form.

[7] A Customer may choose to receive the Data from another Customer rather than directly from MDX's system because it does not want to or is not equipped to manage the technology necessary to establish a direct connection to MDX.

[8] 15 U.S.C. 78f(b).

[9] 15 U.S.C. 78f(b)(4).

the Data, and with Section 6(b)(5)[10] of the Act in that it is not designed to permit unfair discrimination between them. The Exchange believes the proposed fee is equitable and not unfairly discriminatory because it would apply equally to all Customers. All Customers would have the same rights to utilize the Data (i.e., distribute the Data internally and/or externally) as long as the Customer has entered into an agreement with MDX for the Data and pays the data fee.

The Exchange believes the proposed fee is reasonable because it compares favorably to fees that other markets charge for similar products. For example, the Exchange believes Nasdaq charges distributors of its ''Nasdaq Basic'' data feed a monthly fee of $1,500 per firm for either internal or external distribution or both and charges each professional subscriber a per subscriber monthly charge of $10 for Nasdaq-listed stocks, $5 for NYSE-listed stocks, and $5 for Amex-listed stocks.[11] Like the CBSX BBO Data Feed, the Nasdaq Basic data feed includes best bid and offer data and last sale data as well as other market data. The Exchange believes the NYSE charges a monthly fee of $1,500 for the receipt of access to the ''NYSE BBO'' data feed plus $15 per month per professional subscriber and $5 per month per non-professional subscriber. The NYSE BBO data feed provides best bid and offer information for NYSE-traded securities.[12] The Exchange notes that the CBSX BBO Data Feed also competes with products offered by the NYSE entitled NYSE Arca BBO and NYSE MKT BBO that include top-of-book data and NYSE Arca Trades and NYSE MKT Trades that include last sale data similar to the data in the CBSX BBO Data Feed.[13] As noted above, the CBSX BBO Data Feed also includes totals of customer versus non-customer contracts at the BBO, and All-or-None contingency orders priced better than or equal to the BBO.

For the reasons cited above, the Exchange believes the proposed fee for the CBSX BBO Data Feed is equitable, reasonable and not unfairly discriminatory. In addition, the Exchange believes that no substantial countervailing basis exists to support a finding that the proposed terms and fee for the CBSX BBO Data Feed fails to meet the requirements of the Act.

B. Self-Regulatory Organization's Statement on Burden on Competition

CBOE does not believe that the proposed rule change will impose any burden on competition that is not necessary or appropriate in furtherance of the purposes of the Act. To the contrary, the market for orders and executions is already highly competitive and the Exchange's proposal is itself pro-competitive as described below.

The Exchange believes competition provides an effective constraint on the market data fees that the Exchange, through MDX, has the ability and the incentive to charge. CBSX has a compelling need to attract order flow from market participants in order to maintain its share of trading volume. This compelling need to attract order flow imposes significant pressure on CBOE to act reasonably in setting its fees for market data, particularly given that the market participants that will pay such fees often will be the same market participants from whom CBSX must attract order flow. These market participants include broker-dealers that control the handling of a large volume of customer and proprietary order flow. Given the portability of order flow from one exchange to another, any exchange that sought to charge unreasonably high data fees would risk alienating many of the same customers on whose orders it depends for competitive survival. CBSX competes for order flow with the other national securities exchanges that currently trade equities, with electronic communication networks (''ECNs'') and with other trading platforms.

CBOE is constrained in pricing the CBSX BBO Data Feed by the availability to market participants of alternatives to purchasing the CBSX BBO Data Feed. CBOE must consider the extent to which market participants would choose one or more alternatives instead of purchasing CBSX's data. For example, the BBO data and last sale data available in the CBSX BBO Data Feed is included in the CQ, CTA and Nasdaq/UTP data feeds. The CQ, CTA and Nasdaq/UTP data feeds are widely distributed and relatively inexpensive, thus constraining CBOE's ability to price the CBSX BBO Data Feed. In this respect, the CQ, CTA and Nasdaq/UTP data feeds, which include CBSX's transaction information, are significant alternatives to the CBSX BBO Data Feed.

Further, the various self-regulatory organizations, ECNs and the several Trade Reporting Facilities of FINRA that produce proprietary data are sources of potential competition for MDX. As noted above, Nasdaq and NYSE offer market data products that compete with the CBSX BBO Data Feed. In addition, the Exchange believes other exchanges may currently offer top-of-book market data products for a fee or for free.

The Exchange believes that the CBSX BBO Data Feed offered by MDX will help attract new users and new order flow to CBSX, thereby improving CBSX's ability to compete in the market for order flow and executions.

C. Self-Regulatory Organization's Statement on Comments on the Proposed Rule Change Received From Members, Participants, or Others

The Exchange neither solicited nor received comments on the proposed rule change.

III. Date of Effectiveness of the Proposed Rule Change and Timing for Commission Action

The foregoing rule change has become effective pursuant to Section 19(b)(3)(A)(ii) of the Act.[14] At any time within 60 days of the filing of the proposed rule change, the Commission summarily may temporarily suspend such rule change if it appears to the Commission that such action is necessary or appropriate in the public interest, for the protection of investors, or otherwise in furtherance of the purposes of the Act. If the Commission takes such action, the Commission shall institute proceedings to determine whether the proposed rule should be approved or disapproved.

IV. Solicitation of Comments

Interested persons are invited to submit written data, views, and arguments concerning the foregoing, including whether the proposed rule change is consistent with the Act. Comments may be submitted by any of the following methods:

Electronic Comments

- Use the Commission's Internet comment form (*http://www.sec.gov/rules/sro.shtml*); or
- Send an email to *rule-comments@sec.gov.* Please include File Number SR–CBOE–2013–039 on the subject line.

Paper Comments

- Send paper comments in triplicate to Elizabeth M. Murphy, Secretary, Securities and Exchange Commission, 100 F Street NE., Washington, DC 20549–1090.

All submissions should refer to File Number SR–CBOE–2013–039. This file

[10] 15 U.S.C. 78f(b)(5).

[11] *See* Nasdaq Rule 7047 and *http://www.nasdaqtrader.com.* The Exchange believes Nasdaq charges each non-professional subscriber to Nasdaq Basic a per subscriber monthly charge of $0.50 for Nasdaq-listed stocks, $0.25 for NYSE-listed stocks, and $0.25 for Amex-listed stocks.

[12] *See http://www.nyxdata.com.*

[13] Id.

[14] 15 U.S.C. 78s(b)(3)(A)(ii).

number should be included on the subject line if email is used. To help the Commission process and review your comments more efficiently, please use only one method. The Commission will post all comments on the Commission's Internet Web site (*http://www.sec.gov/rules/sro.shtml*). Copies of the submission, all subsequent amendments, all written statements with respect to the proposed rule change that are filed with the Commission, and all written communications relating to the proposed rule change between the Commission and any person, other than those that may be withheld from the public in accordance with the provisions of 5 U.S.C. 552, will be available for Web site viewing and printing in the Commission's Public Reference Room, 100 F Street NE., Washington, DC 20549, on official business days between the hours of 10:00 a.m. and 3:00 p.m. Copies of such filing also will be available for inspection and copying at the principal office of the Exchange. All comments received will be posted without change; the Commission does not edit personal identifying information from submissions. You should submit only information that you wish to make publicly available. All submissions should refer to File Number SR–CBOE–2013–039 and should be submitted on or before May 15, 2013.

For the Commission, by the Division of Trading and Markets, pursuant to delegated authority.[15]

Kevin M. O'Neill,

Deputy Secretary.

[FR Doc. 2013–09627 Filed 4–23–13; 8:45 am]

BILLING CODE 8011–01–P

[15] 17 CFR 200.30–3(a)(12).

SECURITIES AND EXCHANGE COMMISSION

[Release No. 34–69398; File No. SR–FINRA–2013–020]

Self-Regulatory Organizations; Financial Industry Regulatory Authority, Inc.; Notice of Filing and Immediate Effectiveness of a Proposed Rule Change Relating to FINRA Rule 5250 (Payments for Market Making)

April 18, 2013.

Pursuant to Section 19(b)(1) of the Securities Exchange Act of 1934 (''Act'')[1] and Rule 19b–4 thereunder,[2] notice is hereby given that on April 15, 2013, Financial Industry Regulatory Authority, Inc. (''FINRA'') filed with the Securities and Exchange Commission (''SEC'' or ''Commission'') the proposed rule change as described in Items I, II, and III below, which Items have been prepared by FINRA. FINRA has designated the proposed rule change as constituting a ''non-controversial'' rule change under paragraph (f)(6) of Rule 19b–4 under the Act,[3] which renders the proposal effective upon receipt of this filing by the Commission. The Commission is publishing this notice to solicit comments on the proposed rule change from interested persons.

[1] 15 U.S.C. 78s(b)(1).

[2] 17 CFR 240.19b–4.

I. Self-Regulatory Organization's Statement of the Terms of Substance of the Proposed Rule Change

FINRA is proposing to amend FINRA Rule 5250 (Payments for Market Making) to create an exception for payments to members that are expressly provided for under the rules of a national securities exchange.

The text of the proposed rule change is available on FINRA's Web site at *http://www.finra.org*, at the principal office of FINRA and at the Commission's Public Reference Room.

II. Self-Regulatory Organization's Statement of the Purpose of, and Statutory Basis for, the Proposed Rule Change

In its filing with the Commission, FINRA included statements concerning the purpose of and basis for the proposed rule change and discussed any comments it received on the proposed rule change. The text of these statements may be examined at the places specified in Item IV below. FINRA has prepared summaries, set forth in sections A, B, and C below, of the most significant aspects of such statements.

A. Self-Regulatory Organization's Statement of the Purpose of, and Statutory Basis for, the Proposed Rule Change

1. Purpose

FINRA Rule 5250 (Payments for Market Making or ''Rule'') explicitly prohibits any payment by issuers or issuers' affiliates and promoters, directly or indirectly, to a member for publishing a quotation, acting as a market maker, or submitting an application in connection therewith. The Rule is intended, among other things, to prohibit members from receiving compensation or other payments from an issuer for quoting or making a market in the issuer's securities and to assure that members act in an independent capacity when publishing a quotation or making a market in an issuer's securities.

FINRA's policy concerning payments for market making was first set forth in *Notice to Members* 75–16 and then codified as NASD Rule 2460 (now FINRA Rule 5250) in 1997.[4] Among other things, FINRA recognized that members generally have considerable latitude and freedom to make or terminate market making activities and was concerned that payments by an issuer to a market maker could influence a firm's decision to make a market. In particular, the existence of undisclosed, private arrangements between market makers and an issuer and/or its promoters may make it difficult for investors to ascertain the true market for the securities, such that what might appear to be independent trading activity may well be illusory.[5]

FINRA staff has received inquiries regarding the application of the Rule to various types of arrangements provided for by the rules of a national securities exchange (an ''exchange''). For example, the Commission has approved a rule change by NASDAQ Stock Market implementing a voluntary program for market makers that would be funded through fees by the issuer or an affiliate of the issuer (''NASDAQ MQP'').[6] The Commission also currently is considering a proposed rule change by NYSE Arca to adopt a voluntary market maker program for certain exchange-traded products that would be funded through fees by the issuer.[7]

FINRA believes certain exchange program structures, such as the one adopted by NASDAQ, could be deemed an indirect payment under Rule 5250;

[3] 17 CFR 240.19b–4(f)(6).

[4] *See Notice to Members* 75–16 (February 20, 1975) and Securities Exchange Act Release No. 38812 (July 3, 1997), 62 FR 37105 (July 10, 1997) (''Order Approving File No. SR–NASD–97–29'').

[5] ''If payments * * * were permitted, investors would not be able to ascertain which quotations in the marketplace are based on actual interest and which quotations are supported by issuers or promoters. This structure would harm investor confidence in the overall integrity of the marketplace.'' *See* Order Approving File No. SR–NASD–97–29 at 37107.

[6] *See* Securities Exchange Act Release No. 69195 (March 20, 2013), 78 FR 18393 (March 26, 2013) (Order Granting Approval of a Proposed Rule Change, as Modified by Amendment Nos. 1 and 3 Thereto, To Establish the Market Quality Program) (File No. SR–NASDAQ–2012–137) (''SEC Approval Order'').

[7] *See* Securities Exchange Act Release No. 69335 (April 5, 2013), 78 FR 21681 (April 11, 2013) (Notice of Filing of Proposed Rule Change and Amendment No. 1 Thereto To Implement a One-Year Pilot Program for Issuers of Certain Exchange-Traded Products Listed on the Exchange) (File No. SR–NYSEArca–2013–34). This proposal has not been acted upon by the Commission. The Commission has solicited comment on the proposed rule change, which are due by May 2, 2013.

however, FINRA does not believe that such arrangements should be prohibited under the Rule because those payments would be made as part of a transparent structure put in place by another self-regulatory organization pursuant to a rule change, which generally must be approved by the SEC following publication for public comment in the **Federal Register**.[8] Accordingly, where a market maker payment is provided for under the rules of an exchange that are effective after being filed with, or filed with and approved by, the SEC pursuant to the requirements of the Act, it is FINRA's view that comity should be afforded to such exchange rulemaking and the payment should not be prohibited under Rule 5250.

FINRA also believes the NASDAQ MQP contains several features that mitigate the concerns the Commission discussed when approving the predecessor rule to FINRA Rule 5250.[9] For example, the terms of the NASDAQ MQP generally are ''objective, clear, and transparent'' [10] and includes [sic] disclosure requirements to help alert and educate potential and existing investors about the program.[11] Specifically, and among other things, the NASDAQ program provides for Web site disclosure of certain information, including the identities of the companies, securities and market makers participating in the NASDAQ MQP, as well as the amount of the supplemental fee, if any, per security that would be in addition to the fixed basic fee. FINRA believes the level of transparency available regarding the structure of the program, participation of the parties and possible payments to market makers, provides important disclosure to investors in NASDAQ MQP securities, enabling them to identify which exchange-traded funds are and are not subject to the NASDAQ MQP. FINRA, therefore, believes it is appropriate to create an exception to Rule 5250 for payments to members expressly provided for under the rules of an exchange where the Commission has analyzed the payments and determined that the concerns Rule 5250 was designed to addressed have been sufficiently mitigated.

FINRA has filed the proposed rule change for immediate effectiveness. The implementation date of the proposed rule change will be May 15, 2013.

2. Statutory Basis

FINRA believes that the proposed rule change is consistent with the provisions of Section 15A(b)(6) of the Act,[12] which requires, among other things, that FINRA rules must be designed to prevent fraudulent and manipulative acts and practices, to promote just and equitable principles of trade, and, in general, to protect investors and the public interest. FINRA believes that the proposed rule change meets these requirements in that it excepts payments to market makers that are provided for under the rules of a national securities exchange, which are adopted pursuant to the Act's Section 19(b) rule filing process. In addition, these payments and related activity would be governed by the established market surveillance and oversight procedures of a national securities exchange.

FINRA believes that the proposed rule change also maintains the protections the rule was designed to provide, while refining the proper scope of the Rule to exclude payments made pursuant to objective, clear and transparent programs that are established by a national securities exchange to improve the market quality, depth and/or liquidity of securities traded on such exchange.

B. Self-Regulatory Organization's Statement on Burden on Competition

FINRA does not believe that the proposed rule change will result in any burden on competition that is not necessary or appropriate in furtherance of the purposes of the Act in that it treats all national securities exchanges equally by uniformly excepting payments made to market makers pursuant to the rules of an exchange that are effective after being filed with, or filed with and approved by, the SEC pursuant to the requirements of the Act.

C. Self-Regulatory Organization's Statement on Comments on the Proposed Rule Change Received From Members, Participants, or Others

Written comments were neither solicited nor received.

III. Date of Effectiveness of the Proposed Rule Change and Timing for Commission Action

Because the foregoing proposed rule change does not: (i) Significantly affect the protection of investors or the public interest; (ii) impose any significant burden on competition; and (iii) become operative for 30 days from the date on which it was filed, or such shorter time as the Commission may designate, it has become effective pursuant to Section 19(b)(3)(A) of the Act [13] and Rule 19b–4(f)(6) thereunder.[14]

At any time within 60 days of the filing of the proposed rule change, the Commission summarily may temporarily suspend such rule change if it appears to the Commission that such action is necessary or appropriate in the public interest, for the protection of investors, or otherwise in furtherance of the purposes of the Act. If the Commission takes such action, the Commission shall institute proceedings to determine whether the proposed rule should be approved or disapproved.

IV. Solicitation of Comments

Interested persons are invited to submit written data, views and arguments concerning the foregoing, including whether the proposed rule change is consistent with the Act. Comments may be submitted by any of the following methods:

Electronic Comments

- Use the Commission's Internet comment form (*http://www.sec.gov/rules/sro.shtml*); or
- Send an email to *rule-comments@sec.gov.* Please include File Number SR–FINRA–2013–020 on the subject line.

Paper Comments

- Send paper comments in triplicate to Elizabeth M. Murphy, Secretary, Securities and Exchange Commission, 100 F Street NE., Washington, DC 20549–1090.

All submissions should refer to File Number SR–FINRA–2013–020. This file number should be included on the subject line if email is used. To help the Commission process and review your comments more efficiently, please use only one method. The Commission will post all comments on the Commission's Internet Web site (*http://www.sec.gov/rules/sro.shtml*). Copies of the submission, all subsequent amendments, all written statements with respect to the proposed rule change that are filed with the Commission, and all written communications relating to the

[8] *See, e.g.,* Securities Exchange Act Release No. 68515 (December 21, 2012), 77 FR 77141 (December 31, 2012) (Notice of Filing of a Proposed Rule Change and Amendment No. 1 Thereto to Establish the Market Quality Program) (File No. SR–NASDAQ–2012–137).

[9] *See supra* text accompanying note 5.

[10] *See* SEC Approval Order at 18401.

[11] *See* SEC Approval Order.

[12] 15 U.S.C. 78*o*–3(b)(6).

[13] 15 U.S.C. 78s(b)(3)(A).

[14] 17 CFR 240.19b–4(f)(6). In addition, Rule 19b–4(f)(6) requires a self-regulatory organization to give the Commission written notice of its intent to file the proposed rule change at least five business days prior to the date of filing of the proposed rule change, or such shorter time as designated by the Commission. FINRA has satisfied this requirement.

proposed rule change between the Commission and any person, other than those that may be withheld from the public in accordance with the provisions of 5 U.S.C. 552, will be available for Web site viewing and printing in the Commission's Public Reference Room, 100 F Street NE., Washington, DC 20549, on official business days between the hours of 10:00 a.m. and 3:00 p.m. Copies of such filing also will be available for inspection and copying at the principal office of FINRA. All comments received will be posted without change; the Commission does not edit personal identifying information from submissions. You should submit only information that you wish to make available publicly. All submissions should refer to File Number SR–FINRA–2013–020 and should be submitted on or before May 15, 2013.

For the Commission, by the Division of Trading and Markets, pursuant to delegated authority.[15]

Kevin M. O'Neill,

Deputy Secretary.

[FR Doc. 2013–09631 Filed 4–23–13; 8:45 am]

BILLING CODE 8011–01–P

[15] 17 CFR 200.30–3(a)(12).

SECURITIES AND EXCHANGE COMMISSION

[Release No. 34–69401; File No. SR–Phlx–2013–38]

Self-Regulatory Organizations; NASDAQ OMX PHLX LLC; Notice of Filing and Immediate Effectiveness of Proposed Rule Change To Amend Routing Fees

April 18, 2013.

Pursuant to Section 19(b)(1) of the Securities Exchange Act of 1934 (''Act'')[1], and Rule 19b–4[2] thereunder, notice is hereby given that on April 8, 2013, NASDAQ OMX PHLX LLC (''Phlx'' or ''Exchange'') filed with the Securities and Exchange Commission (''Commission'') the proposed rule change as described in Items I, II, and III, below, which Items have been prepared by the Exchange. The Commission is publishing this notice to solicit comments on the proposed rule change from interested persons.

I. Self-Regulatory Organization's Statement of the Terms of Substance of the Proposed Rule Change

The Exchange proposes to amend Section V of the Pricing Schedule entitled ''Routing Fees.''

[1] 15 U.S.C. 78s(b)(1).

[2] 17 CFR 240.19b–4.

While changes to the Pricing Schedule pursuant to this proposal are effective upon filing, the Exchange has designated the proposed amendment to be operative on May 1, 2013.

The text of the proposed rule change is available on the Exchange's Web site at *http://nasdaqomxphlx.cchwallstreet.com/,* at the principal office of the Exchange, and at the Commission's Public Reference Room.

II. Self-Regulatory Organization's Statement of the Purpose of, and Statutory Basis for, the Proposed Rule Change

In its filing with the Commission, the Exchange included statements concerning the purpose of and basis for the proposed rule change and discussed any comments it received on the proposed rule change. The text of these statements may be examined at the places specified in Item IV below. The Exchange has prepared summaries, set forth in sections A, B, and C below, of the most significant aspects of such statements.

A. Self-Regulatory Organization's Statement of the Purpose of, and Statutory Basis for, the Proposed Rule Change

1. Purpose

The purpose of this filing is to amend Routing Fees in Section V of the Pricing Schedule in order to recoup costs that the Exchange incurs for routing and executing orders in equity options to various away markets.

Today, the Exchange assesses Non-Customers a flat rate of $0.95 per contract on all Non-Customer orders routed to any away market and the Exchange assesses Customer orders a fixed fee plus the actual transaction fee dependent on the away market. Specifically, the Exchange assesses Customer orders routed to NASDAQ Options Market LLC (''NOM'') a fixed fee of $0.05 per contract in addition to the actual transaction fee assessed by the away market. With respect to Customer orders that are routed to NASDAQ OMX BX, Inc. (''BX Options''), the Exchange does not assess a Routing Fee and does not pass rebates paid by the away market.[3] The Exchange does not assess a Routing Fee when routing orders to BX Options because that exchange pays a rebate. Instead of netting the customer rebate paid by BX Options against the fixed fee,[4] the Exchange simply does not assess a fee. The Exchange assesses Customer orders routed to all other away markets, except NOM and BX Options, a fixed fee of $0.11 per contract in addition to the actual transaction fee assessed by the away market, unless the away market pays a rebate, then the Routing Fee is $0.00.

The fixed fees are based on costs that are incurred by the Exchange when routing to an away market in addition to the away market's transaction fee. For example, the Exchange incurs a fee when it utilizes Nasdaq Options Services LLC (''NOS''), a member of the Exchange and the Exchange's exclusive order router,[5] to route orders in options listed and open for trading on the PHLX XL system to destination markets. Each time NOS routes to away markets NOS incurs a clearing-related cost[6] and, in the case of certain exchanges, a transaction fee is also charged in certain symbols, which fees are passed through to the Exchange. The Exchange also incurs administrative and technical costs associated with operating NOS, membership fees at away markets, Options Regulatory Fees (''ORFs'') and technical costs associated with routing options. For Customer orders, the transaction fee assessed by the Exchange is based on the away market's actual transaction fee or rebate for a particular market participant at the time that the order was entered into the Exchange's trading system. This transaction fee is calculated on an order-by-order basis for Customer orders, since different away markets charge different amounts. In the event that there is no transaction fee or rebate assessed by the away market, the only fee assessed is the fixed Routing Fee.

The Exchange is proposing to amend the Routing Fees to all other options exchanges, except NOM and BX Options, to increase the fixed fee of

[3] BX Options pays a Customer Rebate to Remove Liquidity as follows: Customers are paid $0.12 per contract in IWM, SPY and QQQ, $0.32 per contract in All Other Penny Pilot Options and $0.70 per contract in Non-Penny Pilot Options. *See* BX Options Rules at Chapter XV, Section 2(1).

[4] BX Options does not assess a Customer a Fee to Remove Liquidity in any symbols today. *See* Chapter V, Section 2(1) of the BX Options Rules.

[5] In May 2009, the Exchange adopted Rule 1080(m)(iii)(A) to establish Nasdaq Options Services LLC (''NOS''), a member of the Exchange, as the Exchange's exclusive order router. *See* Securities Exchange Act Release No. 59995 (May 28, 2009), 74 FR 26750 (June 3, 2009) (SR-Phlx–2009–32). NOS is utilized by the Exchange's fully automated options trading system, PHLX XL®.

[6] The Options Clearing Corporation (''OCC'') assesses a clearing fee of $0.01 per contract side. *See* Securities Exchange Act Release No. 68025 (October 10, 2012), 77 FR 63398 (October 16, 2012) (SR–OCC–2012–18).

$0.11 to $0.15 per contract.[7] The Exchange currently does not recoup all of its costs to route to away markets other than NOM and BX Options. As mentioned herein, the Exchange incurs costs when routing to away markets including away market transaction fees, ORFs, clearing fees, Section 31 related fees, connectivity and membership fees. The Exchange is not recouping its costs currently with the $0.11 per contract fixed fee and proposes to increase the fixed fee to $0.15 per contract.

2. Statutory Basis

The Exchange believes that its proposal to amend its Pricing Schedule is consistent with Section 6(b) of the Act[8] in general, and furthers the objectives of Section 6(b)(4) of the Act,[9] in particular, in that it is an equitable allocation of reasonable fees and other charges among Exchange members.

The Exchange believes that amending the Customer Routing Fee to other away markets, other than NOM and BX Options, from a fixed fee of $0.11 to $0.15 per contract, in addition to the actual transaction fee, is reasonable because the proposed fixed fee for Customer orders is an approximation of the costs the Exchange will be charged for routing orders to away markets. For example, today, NYSE MKT LLC (''Amex'') does not assess a Customer transaction fee.[10] Today, the Exchange would therefore assess a Customer order that was routed to Amex an $0.11 per contract Routing Fee. The Exchange's effective per contract expenses to route to Amex include the ORF, OCC clearing charges, Section 31 related fees, connectivity and membership fees are not covered by the $0.11 per contract and are slightly higher than the $0.15 per contract. As a general matter, the Exchange believes that the proposed fees will allow it to recoup and cover its costs of providing optional routing services for Customer orders because it better approximates the costs incurred by the Exchange for routing such orders. While, each destination market's transaction charge varies and there is a cost incurred by the Exchange when routing orders to away markets, including OCC clearing costs, administrative and technical costs associated with operating NOS, membership fees at away markets, ORFs and technical costs associated with routing options, the Exchange believes that the proposed Routing Fees will enable it to recover the costs it incurs to route Customer orders to away markets. Today, the Exchange is paying a higher average cost per contract than to route Customer orders to away markets, other than NOM and BX Options.

The Exchange believes that the proposed pricing for Customer Routing Fees to all other away markets, except NOM and BX Options, is equitable and not unfairly discriminatory because the Exchange would assess the same fixed fee when routing orders to an away market in addition to the away market transaction fee. The proposal would apply uniformly to all market participants when routing to an away market that pays a rebate. Market participants may submit orders to the Exchange as ineligible for routing or ''DNR'' to avoid Routing Fees.[11] It is important to note that when orders are routed to an away market they are routed based on price first.[12]

Further, the Exchange believes that it is reasonable to continue to not assess a Customer Routing Fee when routing to all other options exchanges, except NOM and BX Options, if the away market pays a rebate. The Exchange will continue to assess a fixed fee, which fee is being increased with this proposal, plus the actual transaction charge assessed by the away market when routing to all other options exchanges, except NOM and BX Options, unless the away market pays a rebate. The Exchange would continue to not assess a Routing Fee if the away market pays a rebate because the Exchange believes it is reasonable to retain the rebate to offset the Routing Fee. The Exchange believes that market participants will have more certainty as to the Customer Routing Fee that will be assessed by the Exchange by simply not assessing a Routing Fee for Customer orders routed to away markets, other than NOM, that pay a rebate.[13] The Exchange believes that not assessing a fee for routing orders to BX Options, instead of netting the customer rebate paid by BX Options against the Fixed Fee[14] is reasonable because although market participants routing orders to BX Options will not receive a credit, the Routing Fee is transparent. Market participants will not pay a Customer Routing Fee when routing orders to BX Options with this proposal instead of the $0.05 per contract fee netted against the rebate, as is the case today. The Exchange believes that the proposed Customer Routing Fee to BX Options is equitable and not unfairly discriminatory because the proposal would apply uniformly to all market participants.

The Exchange believes that it is reasonable, equitable and not unfairly discriminatory to continue to assess Customer orders that are routed to NOM a fixed fee of $0.05 per contract and orders that are routed to other away markets, other than NOM and BX Options, a fixed fee of $0.15 per contract because the cost, in terms of actual cash outlays, to the Exchange to route to NOM (and BX Options)[15] is lower. For example, costs related to routing to NOM are materially lower as compared to other away markets because NOS is utilized by all three exchanges to route orders.[16] NOS and the three NASDAQ OMX options markets have a common data center and staff that are responsible for the day-to-day operations of NOS. Because the three exchanges are in a common data center, Routing Fees are reduced because costly expenses related to, for example, telecommunication lines to obtain connectivity are avoided when routing orders in this instance. The costs related to connectivity to route orders to other NASDAQ OMX exchanges are de minimis. When routing orders to non-NASDAQ OMX exchanges, the Exchange incurs costly connectivity charges related to telecommunication lines and other related costs. The Exchange believes it is reasonable, equitable and not unfairly discriminatory to pass along savings realized by leveraging NASDAQ OMX's infrastructure and scale to market

[7] The Exchange is not proposing to amend Non-Customer Routing Fees or Routing Fees for Customer orders routed to NOM or BX Options.

[8] 15 U.S.C. 78f(b).

[9] 15 U.S.C. 78f(b)(4).

[10] *See* Amex's Fee Schedule.

[11] *See* Rule 1066(h) (Certain Types of Orders Defined) and 1080(b)(i)(A) (PHLX XL and PHLX XL II).

[12] PHLX XL will route orders to away markets where the Exchange's disseminated bid or offer is inferior to the national best bid (best offer) (''NBBO'') price. *See* Rule 1080(m). The PHLX XL II system will contemporaneously route an order marked as an Intermarket Sweep Order (''ISO'') to each away market disseminating prices better than the Exchange's price, for the lesser of: (a) The disseminated size of such away markets, or (b) the order size and, if order size remains after such routing, trade at the Exchange's disseminated bid or offer up to its disseminated size. If contracts still remain unexecuted after routing, they are posted on the book. Once on the book, should the order subsequently be locked or crossed by another market center, the PHLX XL II system will not route the order to the locking or crossing market center, with some exceptions noted in Rule 1080(m).

[13] BX Options pays a Customer Rebate to Remove Liquidity as follows: Customers are paid $0.12 per contract in IWM, SPY and QQQ, $0.32 per contract in All Other Penny Pilot Options and $0.70 per contract in Non-Penny Pilot Options. *See* BX Options Rules at Chapter XV, Section 2(1).

[14] BX Options does not assess a Customer a Fee to Remove Liquidity in any symbols today. *See* Chapter V, Section 2(1) of the BX Options Rules.

[15] The Exchange does not assess the $0.05 per contract Fixed Fee for routing orders to BX Options because that exchange pays Customer rebates, which the Exchange would retain to offset its cost.

[16] *See* Chapter VI, Section 11 of the NASDAQ and BX Options Rules and Phlx Rule 1080(m)(iii)(A).

participants when those orders are routed to NOM.

Finally, the Exchange believes that it is reasonable, equitable and not unfairly discriminatory to assess different fees for Customers orders as compared to non-Customer orders because the Exchange has traditionally assessed lower fees to Customers as compared to non-Customers. Customers will continue to receive the lowest fees or no fees when routing orders, as is the case today. Other options exchanges also assess lower Routing Fees for customer orders as compared to non-customer orders.[17]

B. Self-Regulatory Organization's Statement on Burden on Competition

The Exchange does not believe that the proposed rule change will impose any burden on competition not necessary or appropriate in furtherance of the purposes of the Act. The Exchange does not believe that the proposal creates intra-market competition because the Exchange is applying the same Routing Fees and credits to all market participants in the same manner dependent on the routing venue, with the exception of Customers. The Exchange will continue to assess separate Customer Routing Fees. Customers will continue to receive the lowest fees or no fees when routing orders, as is the case today. Other options exchanges also assess lower Routing Fees for customer orders as compared to non-customer orders.[18]

The Exchange's proposal would allow the Exchange to continue to recoup its costs when routing orders to away markets when such orders are designated as available for routing by the market participant. The Exchange continues to pass along savings realized by leveraging NASDAQ OMX's infrastructure and scale to market participants when those orders are routed to NOM and is providing those savings to all market participants. Members and member organizations may choose to mark the order as ineligible for routing to avoid incurring these fees.[19] Today, other options exchanges also assess fixed routing fees to recoup costs incurred by the Exchange to route orders to away markets.[20]

The Exchange operates in a highly competitive market, comprised of eleven exchanges, in which market participants can easily and readily direct order flow to competing venues if they deem fee levels at a particular venue to be excessive. Accordingly, the fees that are assessed by the Exchange must remain competitive with fees charged by other venues and therefore must continue to be reasonable and equitably allocated to those members organizations that opt to direct orders to the Exchange rather than competing venues.

C. Self-Regulatory Organization's Statement on Comments on the Proposed Rule Change Received From Members, Participants, or Others

No written comments were either solicited or received.

III. Date of Effectiveness of the Proposed Rule Change and Timing for Commission Action

The foregoing rule change has become effective pursuant to Section 19(b)(3)(A)(ii) of the Act.[21] At any time within 60 days of the filing of the proposed rule change, the Commission summarily may temporarily suspend such rule change if it appears to the Commission that such action is necessary or appropriate in the public interest, for the protection of investors, or otherwise in furtherance of the purposes of the Act. If the Commission takes such action, the Commission shall institute proceedings to determine whether the proposed rule should be approved or disapproved.

IV. Solicitation of Comments

Interested persons are invited to submit written data, views, and arguments concerning the foregoing, including whether the proposed rule change is consistent with the Act. Comments may be submitted by any of the following methods:

Electronic comments:

- Use the Commission's Internet comment form (*http://www.sec.gov/rules/sro.shtml*); or
- Send an email to *rule-comments@sec.gov.* Please include File Number SR–Phlx–2013–38 on the subject line.

Paper comments:

- Send paper comments in triplicate to Elizabeth M. Murphy, Secretary, Securities and Exchange Commission, 100 F Street NE., Washington, DC 20549–1090.

All submissions should refer to File Number SR–Phlx–2013–38. This file number should be included on the subject line if email is used. To help the Commission process and review your comments more efficiently, please use only one method. The Commission will post all comments on the Commission's Internet Web site (*http://www.sec.gov/rules/sro.shtml*). Copies of the submission, all subsequent amendments, all written statements with respect to the proposed rule change that are filed with the Commission, and all written communications relating to the proposed rule change between the Commission and any person, other than those that may be withheld from the public in accordance with the provisions of 5 U.S.C. 552, will be available for Web site viewing and printing in the Commission's Public Reference Room, 100 F Street NE., Washington, DC 20549, on official business days between the hours of 10:00 a.m. and 3:00 p.m. Copies of such filing also will be available for inspection and copying at the principal office of the Exchange. All comments received will be posted without change; the Commission does not edit personal identifying information from submissions. You should submit only information that you wish to make available publicly. All submissions should refer to File Number SR–Phlx–2013–38 and should be submitted on or before May 15, 2013.

For the Commission, by the Division of Trading and Markets, pursuant to delegated authority.[22]

Kevin M. O'Neill,

Deputy Secretary.

[FR Doc. 2013–09629 Filed 4–23–13; 8:45 am]

BILLING CODE 8011–01–P

[17] BATS assesses lower customer routing fees as compared to non-customer routing fees per the away market. For example BATS assesses ISE customer routing fees of $0.30 per contract and an ISE non-customer routing fee of $0.57 per contract. *See* BATS BZX Exchange Fee Schedule.

[18] *Id.*

[19] *See supra* note 11.

[20] *See* CBOE's Fees Schedule and ISE's Fee Schedule.

[21] 15 U.S.C. 78s(b)(3)(A)(ii).

[22] 17 CFR 200.30–3(a)(12).

SECURITIES AND EXCHANGE COMMISSION

[Release No. 34–69394; File No. SR–ISE–2013–33]

Self-Regulatory Organizations; International Securities Exchange, LLC; Notice of Filing and Immediate Effectiveness of Proposed Rule Change To Amend the Schedule of Fees

April 18, 2013.

Pursuant to Section 19(b)(1) of the Securities Exchange Act of 1934 (the ''Act''),[1] and Rule 19b–4 thereunder,[2] notice is hereby given that on April 12, 2013, the International Securities Exchange, LLC (the ''Exchange'' or the

[1] 15 U.S.C. 78s(b)(1).

[2] 17 CFR 240.19b–4.

''ISE'') filed with the Securities and Exchange Commission the proposed rule change, as described in Items I, II, and III below, which items have been prepared by the self-regulatory organization. The Commission is publishing this notice to solicit comments on the proposed rule change from interested persons.

I. Self-Regulatory Organization's Statement of the Terms of Substance of the Proposed Rule Change

The ISE proposes to amend its Schedule of Fees. The text of the proposed rule change is available on the Exchange's Web site (*http://www.ise.com*), at the principal office of the Exchange, and at the Commission's Public Reference Room.

II. Self-Regulatory Organization's Statement of the Purpose of, and Statutory Basis for, the Proposed Rule Change

In its filing with the Commission, the self-regulatory organization included statements concerning the purpose of, and basis for, the proposed rule change and discussed any comments it received on the proposed rule change. The text of these statements may be examined at the places specified in Item IV below. The self-regulatory organization has prepared summaries, set forth in sections A, B and C below, of the most significant aspects of such statements.

A. Self-Regulatory Organization's Statement of the Purpose of, and the Statutory Basis for, the Proposed Rule Change

1. Purpose

The Exchange currently assesses per contract transaction fees and provides rebates to market participants that add or remove liquidity from the Exchange (''maker/taker fees and rebates'') in all symbols that are in the Penny Pilot program (''Select Symbols''). The Exchange's maker/taker fees and rebates are applicable to regular and complex orders executed in the Select Symbols. The fee changes discussed below apply to both standard options and mini options traded on the Exchange. The Exchange's Schedule of Fees has separate tables for fees and rebates applicable to standard options and mini options. The Exchange notes that while the discussion below notes the fees and rebates for standard options, the fees and rebates for mini options, which are not discussed below, are and shall continue to be 1/10th of the fees and rebates for standard options.[3]

For regular orders that remove liquidity in the Select Symbols, the Exchange currently charges a taker fee of: (i) $0.32 per contract for Market Maker[4] and Market Maker Plus[5] orders, (ii) $0.36 per contract for Non-ISE Market Maker[6] orders, (iii) $0.33 per contract for Firm Proprietary/Broker-Dealer and Professional Customer[7] orders, and (iv) $0.25 per contract for Priority Customer[8] orders. The Exchange now proposes to increase the taker fee for: (i) Market Maker and Market Maker Plus orders in the Select Symbols from $0.32 per contract to $0.34 per contract, (ii) Non-ISE Market Maker orders in the Select Symbols from $0.36 per contract to $0.38 per contract, (iii) Firm Proprietary/Broker-Dealer and Professional Customer orders in the Select Symbols from $0.33 per contract to $0.35 per contract, and (iv) Priority Customer orders in the Select Symbols from $0.25 per contract to $0.28 per contract.

For regular orders in Non-Select Symbols,[9] the Exchange currently charges an execution fee of: (i) $0.18 per contract for Market Maker orders; (ii) $0.20 per contract for Market Maker (for orders sent by Electronic Access Members), Firm Proprietary/Broker-Dealer and Professional Customer orders; (iii) $0.45 per contract for Non-ISE Market Maker orders; and (iv) $0.00 per contract for Priority Customer orders (for Singly Listed Symbols, this fee is $0.20 per contract). The Exchange now proposes to increase the execution fee for Firm Proprietary/Broker-Dealer and Professional Customer orders, from $0.20 per contract to $0.30 per contract. The Exchange is not proposing any change to the execution fee for other market participants.

For Responses to Crossing Orders in Non-Select Symbols, the Exchange currently charges a fee of: (i) $0.18 per contract for Market Maker orders; (ii) $0.20 per contract for Market Maker (for orders sent by Electronic Access Members), Firm Proprietary/Broker-Dealer and Professional Customer orders; (iii) $0.45 per contract for Non-ISE Market Maker orders; and (iv) $0.20 per contract for Priority Customer and Priority Customer (Singly Listed Symbols) orders. The Exchange now proposes to increase the Fee for Responses to Crossing Orders for Firm Proprietary/Broker-Dealer and Professional Customer orders, from $0.20 per contract to $0.30 per contract. The Exchange is not proposing any change to the Fee for Responses to Crossing Orders for other market participants.

For FX Options, the Exchange currently charges an execution fee of: (i) $0.18 per contract for Market Maker and Priority Customer orders; (ii) $0.20 per contract for Market Maker (for orders sent by Electronic Access Members), Firm Proprietary/Broker-Dealer and Professional Customer orders; (iii) $0.45 per contract for Non-ISE Market Maker orders; (iv) $0.40 per contract for Priority Customer orders in Early Adopter FX Option Symbols; and (v) $0.00 per contract for Early Adopter Market Maker orders. The Exchange now proposes to increase the execution fee for Firm Proprietary/Broker-Dealer and Professional Customer orders, from $0.20 per contract to $0.30 per contract. The Exchange is not proposing any change to the execution fee for other market participants.

For Responses to Crossing Orders in FX Options, the Exchange currently charges a fee of: (i) $0.18 per contract for

[3] *See* Securities Exchange Act Release No. 69270 (April 2, 2013), 78 FR 20988 (April 8, 2013) (SR–ISE–2013–28).

[4] The term ''Market Makers'' refers to ''Competitive Market Makers'' and ''Primary Market Makers'' collectively. *See* ISE Rule 100(a)(25).

[5] In order to promote and encourage liquidity in the Select Symbols, the Exchange currently offers a $0.10 per contract rebate to Market Makers if the quotes they send to the Exchange qualify the Market Maker to become a Market Maker Plus. A Market Maker Plus is a Market Maker who is on the National Best Bid or National Best Offer 80% of the time for series trading between $0.03 and $5.00 (for options whose underlying stock's previous trading day's last sale price was less than or equal to $100) and between $0.10 and $5.00 (for options whose underlying stock's previous trading day's last sale price was greater than $100) in premium in each of the front two expiration months and 80% of the time for series trading between $0.03 and $5.00 (for options whose underlying stock's previous trading day's last sale price was less than or equal to $100) and between $0.10 and $5.00 (for options whose underlying stock's previous trading day's last sale price was greater than $100) in premium for all expiration months in that symbol during the current trading month. A Market Maker's single best and single worst overall quoting days each month, on a per symbol basis, is excluded in calculating whether a Market Maker qualifies for this rebate, if doing so will qualify a Market Maker for the rebate. The Exchange provides Market Makers a report on a daily basis with quoting statistics so that Market Makers can determine whether or not they are meeting the Exchange's stated criteria.

[6] A Non-ISE Market Maker, or Far Away Market Maker (''FARMM''), is a market maker as defined in Section 3(a)(38) of the Securities Exchange Act of 1934 registered in the same options class on another options exchange.

[7] A Professional Customer is a person who is not a broker/dealer and is not a Priority Customer.

[8] A Priority Customer is defined in ISE Rule 100(a)(37A) as a person or entity that is not a broker/dealer in securities, and does not place more than 390 orders in listed options per day on average during a calendar month for its own beneficial account(s).

[9] ''Non-Select Symbols'' are options overlying all symbols excluding Select Symbols.

Market Maker orders; (ii) $0.20 per contract for Market Maker (for orders sent by Electronic Access Members), Firm Proprietary/Broker-Dealer, Professional Customer and Priority Customer orders; (iii) $0.45 per contract for Non-ISE Market Maker orders; (iv) $0.40 per contract for Priority Customer in Early Adopter FX Option Symbols; and (v) $0.00 per contract for Early Adopter Market Maker orders. The Exchange now proposes to increase the Fee for Responses to Crossing Orders for Firm Proprietary/Broker-Dealer and Professional Customer orders, from $0.20 per contract to $0.30 per contract. The Exchange is not proposing any change to the Fee for Responses to Crossing Orders for other market participants.

Since the rate changes to the Schedule of Fees pursuant to this proposal will be effective upon filing, for the transactions occurring in April 2013 prior to the effective date of this filing members will be assessed the rates in effect immediately prior to those proposed by this filing. For transactions occurring in April 2013 on and after the effective date of this filing, members will be assessed the rates proposed by this filing.

2. Statutory Basis

The Exchange believes that its proposal to amend its Schedule of Fees is consistent with Section 6(b) of the Securities and Exchange Act of 1934 (the ''Act'') [10] in general, and furthers the objectives of Section 6(b)(4) of the Act [11] in particular, in that it is an equitable allocation of reasonable dues, fees and other charges among Exchange members and other persons using its facilities.

The Exchange has determined to charge fees and provide rebates for regular orders in mini options at a rate that is 1/10th the rate of fees and rebates the Exchange currently provides for trading in standard options. The Exchange believes it is reasonable and equitable and not unfairly discriminatory to assess lower fees and rebates to provide market participants an incentive to trade mini options on the Exchange. The Exchange believes the proposed fees and rebates are reasonable and equitable in light of the fact that mini options have a smaller exercise and assignment value, specifically 1/10th that of a standard option contract, and, as such, levying fees that are 1/10th of what market participants pay today.

The Exchange believes that its proposal to assess a $0.34 per contract taker fee for regular Market Maker and Market Maker Plus orders in the Select Symbols is reasonable and equitably allocated because the fee is within the range of fees assessed by other exchanges employing similar pricing schemes. For example, NASDAQ Options Market (''NOM'') currently charges a taker fee of $0.48 per contract to NOM Market Maker orders in Penny Pilot options in its regular order book.[12] The Exchange also notes that with this proposed rule change, the fee charged to regular Market Maker and Market Maker Plus orders in the Select Symbols will remain lower than the fee currently charged by the Exchange to certain other market participants.

The Exchange also believes that its proposal to assess a $0.35 per contract taker fee for regular Firm Proprietary/Broker-Dealer and Professional Customer orders and $0.38 per contract taker fee for regular Non-ISE Market Maker orders in the Select Symbols is reasonable and equitably allocated because the fee is also within the range of fees assessed by other exchanges employing similar pricing schemes. By comparison, the proposed fees assessed to regular Firm Proprietary/Broker-Dealer and Professional Customer orders and to regular Non-ISE Market Maker orders are lower than the rates assessed by NOM for similar orders. NOM currently charges a taker fee of $0.48 per contract for equivalent orders in its regular order book.[13]

The Exchange also believes that its proposal to assess a $0.28 per contract taker fee for all regular Priority Customer orders in the Select Symbols is reasonable and equitably allocated because the fee is within the range of fees assessed by other exchanges employing similar pricing schemes. The proposed fee is substantially lower than the $0.45 per contract taker fee currently charged by NOM for Customer orders in its regular order book.[14] Therefore, while ISE is proposing a fee increase, the resulting fee remains lower than the fee currently charged by NOM. The Exchange also notes that with this proposed rule change, the fee charged to regular Priority Customer orders will remain lower (as it historically has always been) than the fee currently charged by the Exchange to other market participants.

The Exchange believes it is reasonable and equitable to charge a fee of $0.30 per contract for regular Firm Proprietary/Broker-Dealer orders and regular Professional Customer orders in Non-Select Symbols and in FX Options and also when such members are responding to crossing orders because the fee is also within the range of fees assessed by other exchanges employing similar pricing schemes. By comparison, the proposed fees assessed to regular Firm Proprietary/Broker-Dealer and Professional Customer orders are lower than the rates assessed by NOM for similar orders. NOM currently charges a taker fee of $0.89 per contract in Non-Penny Pilot options in its regular order book.[15] The Exchange notes that an execution resulting from a response to a crossing order is akin to an execution and therefore its proposal to establish execution fees and fees for responses to crossing orders that are identical is reasonable and equitable. The Exchange believes its proposal to increase the execution fee and fee for responses to crossing orders for regular orders in Non-Select Symbols and FX Options is not unfairly discriminatory because the proposed fees would apply uniformly to all regular Firm Proprietary/Broker-Dealer and Professional Customer orders in the same manner.

The Exchange believes that the price differentiation between the various market participants is justified. As for Priority Customers, for the most part, the Exchange does not charge Priority Customers a fee (Priority Customers have traditionally traded options on the Exchange without a fee) and to the extent they pay a transaction fee, those fees are lower than fees charged to other market participants. The Exchange believes charging lower fees, or no fees, to Priority Customer orders attracts that order flow to the Exchange and thereby creates liquidity to the benefit of all market participants who trade on the Exchange. With respect to fees to Non-ISE Market Maker orders, the Exchange believes that charging Non-ISE Market Maker orders a higher rate than the fee charged to Market Maker, Firm Proprietary/Broker-Dealer and Professional Customer regular orders is appropriate and not unfairly discriminatory because Non-ISE Market Makers are not subject to many of the non-transaction based fees that these other categories of membership are subject to, e.g., membership fees, access fees, API/Session fees, market data fees, etc. Therefore, the Exchange believes it

[10] 15 U.S.C. 78f(b).

[11] 15 U.S.C. 78f(b)(4).

[12] *See* NOM fee schedule at *http://nasdaq.cchwallstreet..com/NASDAQ.Tools/.Platform.Viewer.asp?.selectednode=chp._1._1._15&.manual=%2Fnasdaq.%2Fmain.%2Fnasdaq.-optionsrules%2F.*

[13] *Id.*

[14] *Id.*

[15] *Id.*

is appropriate and not unfairly discriminatory to assess a higher transaction fee to Non-ISE Market Makers because the Exchange incurs costs associated with these types of orders that are not recovered by non-transaction based fees paid by members. With respect to fees for Market Maker orders, the Exchange believes that the price differentiation between the various market participants is appropriate and not unfairly discriminatory because Market Makers have different requirements and obligations to the Exchange that the other market participants do not (such as quoting requirements and paying membership-related non-transaction fees). The Exchange believes that it is equitable and not unfairly discriminatory to assess a higher fee to market participants that do not have such requirements and obligations that Exchange Market Makers do.

Moreover, the Exchange believes that the proposed fees are fair, equitable and not unfairly discriminatory because the proposed fees are consistent with price differentiation that exists today at other options exchanges. Additionally, the Exchange believes it remains an attractive venue for market participants to direct their order flow in the symbols that are subject to this proposed rule change as its fees are competitive with those charged by other exchanges for similar trading strategies. The Exchange operates in a highly competitive market in which market participants can readily direct order flow to another exchange if they deem fee levels at a particular exchange to be excessive. For the reasons noted above, the Exchange believes that the proposed fees are fair, equitable and not unfairly discriminatory.

B. Self-Regulatory Organization's Statement on Burden on Competition

ISE does not believe that the proposed rule change will impose any burden on competition that is not necessary or appropriate in furtherance of the purposes of the Act. The Exchange believes the proposed fee change does not impose a burden on competition because the proposed taker fee increase for regular orders in Select Symbols is consistent with fees charged by other exchanges. The Exchange believes the proposed new taker fees for regular orders in Select Symbols does not impose a burden on competition because the rate increase applies to all market participants on the Exchange. Further, by raising the proposed taker fee for regular orders in Select Symbols by similar amounts (with the exception for Priority Customers, who have historically paid lower or no fees and will continue to pay lower fees with this proposed rule change), the proposed new taker fees for regular orders in Select Symbols does not impose a burden on competition because all participants are affected to the same extent.

Similarly, the proposed increase to the execution fee and the fee for responses to crossing orders is not a burden on competition because it will uniformly apply to all Firm Proprietary/Broker-Dealer and Professional Customer orders that transact in regular orders in Non-Select Symbols and in FX Options. The Exchange believes the proposed execution fee and the proposed new fee for responses to crossing orders for regular orders in Non-Select Symbols and FX Options does not impose a burden on competition because it sets the same rate for all Firm Proprietary/Broker Dealer and Professional Customer orders. Further, by raising the proposed execution fee and the proposed fee for responses to crossing orders for regular orders in Non-Select Symbols and FX Options by similar amounts, the proposed execution fee and the proposed fee for responses to crossing orders for regular orders in Non-Select Symbols and FX Options does not impose a burden on competition because all Firm Proprietary/Broker-Dealer and Professional Customer orders are affected to the same extent.

The Exchange notes that it operates in a highly competitive market in which market participants can readily direct their order flow to competing venues. In such an environment, the Exchange must continually review, and consider adjusting, its fees and rebates to remain competitive with other exchanges. For the reasons described above, the Exchange believes that the proposed fee change reflects this competitive environment.

C. Self-Regulatory Organization's Statement on Comments on the Proposed Rule Change Received From Members, Participants, or Others

The Exchange has not solicited, and does not intend to solicit, comments on this proposed rule change. The Exchange has not received any unsolicited written comments from members or other interested parties.

III. Date of Effectiveness of the Proposed Rule Change and Timing for Commission Action

The foregoing rule change has become effective pursuant to Section 19(b)(3)(A)(ii) of the Act [16] and subparagraph (f)(2) of Rule 19b–4 thereunder,[17] because it establishes a due, fee, or other charge imposed by ISE.

At any time within 60 days of the filing of such proposed rule change, the Commission summarily may temporarily suspend such rule change if it appears to the Commission that such action is necessary or appropriate in the public interest, for the protection of investors, or otherwise in furtherance of the purposes of the Act. If the Commission takes such action, the Commission shall institute proceedings to determine whether the proposed rule should be approved or disapproved.

IV. Solicitation of Comments

Interested persons are invited to submit written data, views, and arguments concerning the foregoing, including whether the proposed rule change is consistent with the Act. Comments may be submitted by any of the following methods:

Electronic Comments

- Use the Commission's Internet comment form (*http://www.sec.gov/rules/sro.shtml*); or
- Send an email to *rule-comments@sec.gov.* Please include File Number SR–ISE–2013–33 on the subject line.

Paper Comments

- Send paper comments in triplicate to Elizabeth M. Murphy, Secretary, Securities and Exchange Commission, 100 F Street NE., Washington, DC 20549–1090.

All submissions should refer to File Number SR–ISE–2013–33. This file number should be included on the subject line if email is used. To help the Commission process and review your comments more efficiently, please use only one method. The Commission will post all comments on the Commission's Internet Web site (*http://www.sec.gov/rules/sro.shtml).* Copies of the submission, all subsequent amendments, all written statements with respect to the proposed rule change that are filed with the Commission, and all written communications relating to the proposed rule change between the Commission and any person, other than those that may be withheld from the public in accordance with the provisions of 5 U.S.C. 552, will be available for Web site viewing and printing in the Commission's Public

[16] 15 U.S.C. 78s(b)(3)(A)(ii).

[17] 17 CFR 240.19b–4(f)(2).

Reference Room, 100 F Street NE., Washington, DC 20549, on official business days between the hours of 10:00 a.m. and 3:00 p.m. Copies of such filing also will be available for inspection and copying at the principal office of the Exchange. All comments received will be posted without change; the Commission does not edit personal identifying information from submissions. You should submit only information that you wish to make available publicly. All submissions should refer to File Number SR–ISE–2013–33, and should be submitted on or before May 15, 2013.

For the Commission, by the Division of Trading and Markets, pursuant to delegated authority.[18]

Kevin M. O'Neill,

Deputy Secretary.

[FR Doc. 2013–09654 Filed 4–23–13; 8:45 am]

BILLING CODE 8011–01–P

SECURITIES AND EXCHANGE COMMISSION

[Release No. 34–69395; File No. SR–ISE–2013–31]

Self-Regulatory Organizations; International Securities Exchange, LLC; Notice of Filing and Immediate Effectiveness of Proposed Rule Change To Amend the Schedule of Fees To Increase Certain Complex Order Rebates

April 18, 2013.

Pursuant to Section 19(b)(1) of the Securities Exchange Act of 1934 (the ''Act''),[1] and Rule 19b–4 thereunder,[2] notice is hereby given that on April 10, 2013, the International Securities Exchange, LLC (the ''Exchange'' or the ''ISE'') filed with the Securities and Exchange Commission the proposed rule change, as described in Items I, II, and III below, which items have been prepared by the self-regulatory organization. The Commission is publishing this notice to solicit comments on the proposed rule change from interested persons.

I. Self-Regulatory Organization's Statement of the Terms of Substance of the Proposed Rule Change

The ISE proposes to amend its Schedule of Fees to increase certain complex order rebates. The text of the proposed rule change is available on the Exchange's Web site (*http://www.ise.com*), at the principal office of the Exchange, and at the Commission's Public Reference Room.

II. Self-Regulatory Organization's Statement of the Purpose of, and Statutory Basis for, the Proposed Rule Change

In its filing with the Commission, the self-regulatory organization included statements concerning the purpose of, and basis for, the proposed rule change and discussed any comments it received on the proposed rule change. The text of these statements may be examined at the places specified in Item IV below. The self-regulatory organization has prepared summaries, set forth in sections A, B and C below, of the most significant aspects of such statements.

A. Self-Regulatory Organization's Statement of the Purpose of, and the Statutory Basis for, the Proposed Rule Change

1. Purpose

The purpose of this proposed rule change is to increase the rebate levels for Priority Customer complex orders that trade with quotes and orders on the regular orderbook in all symbols traded on the Exchange. The rebates discussed below apply to both standard options and mini options traded on the Exchange. The Exchange's Schedule of Fees has separate tables for fees and rebates applicable to standard options and mini options. The Exchange notes that while the discussion below notes the rebates for standard options, the rebates for mini options, which are not discussed below, are and shall continue to be 1/10th of the rebates for standard options.[3]

In order to enhance the Exchange's competitive position and to incentivize Members to increase the amount of Priority Customer complex orders that they send to the Exchange, the Exchange provides volume-based tiered rebates for Priority Customer complex orders that trade with quotes and orders on the regular order book in all symbols traded on the Exchange. Specifically, the Exchange currently provides a base rebate of $0.06 per contract, per leg, for Priority Customer complex orders in all symbols traded on the Exchange (excluding SPY) when these orders trade against quotes or orders in the regular orderbook. The current average daily volume (ADV) threshold for the base tier is 0–39,999 Priority Customer complex contracts and the base rebate of $0.06 per contract, per leg, applies to this tier. The Exchange is not proposing any change to the rebate for this tier. The current ADV threshold for the second tier is 40,000–74,999 Priority Customer complex contracts. The rebate amount for this tier is currently $0.08 per contract, per leg. The Exchange proposes to increase the rebate for this tier to $0.12 per contract, per leg. The current ADV threshold for the third tier is 75,000–124,999 Priority Customer complex contracts. The rebate amount for this tier is currently $0.09 per contract, per leg. The Exchange proposes to increase the rebate for this tier to $0.13 per contract, per leg. The current ADV threshold for the fourth tier is 125,000–224,999 Priority Customer complex contracts. The rebate amount for this tier is currently $0.10 per contract, per leg. The Exchange proposes to increase the rebate for this tier to $0.17 per contract, per leg. Finally, the current ADV threshold for the fifth tier is 225,000 or more Priority Customer complex contracts. The rebate amount for this tier is currently $0.11 per contract, per leg. The Exchange proposes to increase the rebate for this tier to $0.18 per contract, per leg. The highest rebate amount achieved by the Member for the current calendar month applies retroactively to all Priority Customer complex orders that trade against quotes or orders in the regular orderbook during such calendar month.

For SPY, the Exchange currently provides a base rebate of $0.07 per contract, per leg, for Priority Customer complex orders traded on the Exchange when these orders trade against quotes or orders in the regular orderbook. The current ADV threshold for the base tier is 0–39,999 Priority Customer complex contracts and the base rebate of $0.07 per contract, per leg, applies to this tier. The Exchange is not proposing any change to the rebate for this tier. The current ADV threshold for the second tier is 40,000–74,999 Priority Customer complex contracts. The rebate amount for this tier is currently $0.09 per contract, per leg. The Exchange proposes to increase the rebate for this tier to $0.13 per contract, per leg. The current ADV threshold for the third tier is 75,000–124,999 Priority Customer complex contracts. The rebate amount for this tier is currently $0.10 per contract, per leg. The Exchange proposes to increase the rebate for this tier to $0.14 per contract, per leg. The current ADV threshold for the fourth tier is 125,000–224,999 Priority Customer complex contracts. The rebate amount for this tier is currently $0.11 per contract, per leg. The Exchange proposes to increase the rebate for this tier to $0.18 per contract, per leg.

---

[18] 17 CFR 200.30–3(a)(12).

[1] 15 U.S.C. 78s(b)(1).

[2] 17 CFR 240.19b–4.

[3] *See* Securities Exchange Act Release No. 69270 (April 2, 2013), 78 FR 20988 (April 8, 2013) (SR–ISE–2013–28).

Finally, the current ADV threshold for the fifth tier is 225,000 or more Priority Customer complex contracts. The rebate amount for this tier is currently $0.12 per contract, per leg. The Exchange proposes to increase the rebate for this tier to $0.19 per contract, per leg. The highest rebate amount achieved by the Member for the current calendar month applies retroactively to all Priority Customer complex orders that trade against quotes or orders in the regular orderbook during such calendar month.

The Exchange believes this proposed change will enhance the Exchange's competitive position and incentivize Members to increase the amount of Priority Customer complex orders that they send to the Exchange.

The Exchange is not proposing any other changes in this filing.

Since the rate changes to the Schedule of Fees pursuant to this proposal will be effective upon filing, for the transactions occurring in April 2013 prior to the effective date of this filing members will be assessed the rates in effect immediately prior to those proposed by this filing. For transactions occurring in April 2013 on and after the effective date of this filing, members will be assessed the rates proposed by this filing.

2. Statutory Basis

The Exchange believes that its proposal to amend its Schedule of Fees is consistent with Section 6(b) of the Securities and Exchange Act of 1934 (the ''Act'')[4] in general, and furthers the objectives of Section 6(b)(4) of the Act[5] in particular, in that it is an equitable allocation of reasonable dues, fees and other charges among Exchange members and other persons using its facilities. The impact of the proposal upon the net fees paid by a particular market participant will depend on a number of variables, most important of which will be its propensity to add or remove liquidity in options overlying the symbols that are subject to the Exchange's maker/taker fees and rebates.

The Exchange has determined to charge fees and provide rebates for regular orders in mini options at a rate that is 1/10th the rate of fees and rebates the Exchange currently provides for trading in standard options. The Exchange believes it is reasonable and equitable and not unfairly discriminatory to assess lower fees and rebates to provide market participants an incentive to trade mini options on the Exchange. The Exchange believes the proposed fees and rebates are reasonable and equitable in light of the fact that mini options have a smaller exercise and assignment value, specifically 1/10th that of a standard option contract, and, as such, levying fees that are 1/10th of what market participants pay today.

The Exchange believes that it is reasonable and equitable to provide rebates for Priority Customer complex orders when these orders trade against quotes or orders in the regular orderbook because paying a rebate would continue to attract additional order flow to the Exchange and create liquidity in the symbols that are subject to the rebate, which the Exchange believes ultimately will benefit all market participants who trade on ISE. The Exchange has already established a volume-based incentive program, and is now merely proposing to increase the rebate amounts in that program. The Exchange believes that the proposed rebates are competitive with rebates provided by other exchanges and are therefore reasonable and equitably allocated to those members that direct orders to the Exchange rather than to a competing exchange. The Exchange believes paying these rebates would also attract additional order flow to the Exchange.

The Exchange believes that the proposed fee change will generally allow the Exchange and its Members to better compete for order flow and thus enhance competition. Specifically, the Exchange believes that its proposal, which increases rebate amounts, so Members can qualify for larger rebates, is reasonable as it will encourage Members to increase the amount of Priority Customer complex orders that they send to the Exchange instead of sending this order flow to a competing exchange. The Exchange believes that with the proposed rebate levels, Members are now likely to qualify for larger rebates.

The complex order pricing employed by the Exchange has proven to be an effective pricing mechanism and attractive to Exchange participants and their customers. The Exchange believes that this proposed rule change will continue to attract additional complex order business in the symbols that are subject to this proposed rule change.

Moreover, the Exchange believes that the proposed fees are fair, equitable and not unfairly discriminatory because the proposed fees are consistent with price differentiation that exists today at other options exchanges. Additionally, the Exchange believes it remains an attractive venue for market participants to direct their order flow in the symbols that are subject to this proposed rule change as its fees are competitive with those charged by other exchanges for similar trading strategies. The Exchange operates in a highly competitive market in which market participants can readily direct order flow to another exchange if they deem fee levels at a particular exchange to be excessive. For the reasons noted above, the Exchange believes that the proposed fees are fair, equitable and not unfairly discriminatory.

B. Self-Regulatory Organization's Statement on Burden on Competition

ISE believes that the proposed rule change, which will maintain fees that are competitive and are within the range of fees charged by other exchanges for similar orders, will not impose any burden on competition that is not necessary or appropriate in furtherance of the purposes of the Act. Indeed, the Exchange believes that the proposed changes will promote competition, as they are designed to allow ISE to better compete for order flow and improve the Exchange's competitive position.

The Exchange does not believe providing increased rebates to market participants is an undue burden on competition as the Exchange already provides these rebates and is now merely increasing the level of these rebates in response to increased rebates provided by other markets to attract Priority Customer order flow. Further, the Exchange believes the adjustment of the rebate for Priority Customer orders that trade with quotes and orders on the regular orderbook in all symbols reduces the burden on competition by providing additional incentives for Priority Customer orders traded on the Exchange. This incents competition because non-Priority Customers wish to have Priority Customer orders attracted to the Exchange by having attractive rebates.

Finally, the Exchange notes that it operates in a highly competitive market in which market participants can readily direct their order flow to competing venues. In such an environment, the Exchange must continually review, and consider adjusting, its fees and rebates to remain competitive with other exchanges. For the reasons described above, the Exchange believes that the proposed fee change reflects this competitive environment.

[4] 15 U.S.C. 78f(b).

[5] 15 U.S.C. 78f(b)(4).

C. Self-Regulatory Organization's Statement on Comments on the Proposed Rule Change Received From Members, Participants, or Others

The Exchange has not solicited, and does not intend to solicit, comments on this proposed rule change. The Exchange has not received any unsolicited written comments from members or other interested parties.

III. Date of Effectiveness of the Proposed Rule Change and Timing for Commission Action

The foregoing rule change has become effective pursuant to Section 19(b)(3)(A)(ii) of the Act[6] and subparagraph (f)(2) of Rule 19b–4 thereunder,[7] because it establishes a due, fee, or other charge imposed by ISE.

At any time within 60 days of the filing of such proposed rule change, the Commission summarily may temporarily suspend such rule change if it appears to the Commission that such action is necessary or appropriate in the public interest, for the protection of investors, or otherwise in furtherance of the purposes of the Act. If the Commission takes such action, the Commission shall institute proceedings to determine whether the proposed rule should be approved or disapproved.

IV. Solicitation of Comments

Interested persons are invited to submit written data, views, and arguments concerning the foregoing, including whether the proposed rule change is consistent with the Act. Comments may be submitted by any of the following methods:

Electronic Comments

- Use the Commission's Internet comment form (*http://www.sec.gov/rules/sro.shtml*); or
- Send an email to *rule-comments@sec.gov*. Please include File Number SR–ISE–2013–31 on the subject line.

Paper Comments

- Send paper comments in triplicate to Elizabeth M. Murphy, Secretary, Securities and Exchange Commission, 100 F Street NE., Washington, DC 20549–1090.

All submissions should refer to File Number SR–ISE–2013–31. This file number should be included on the subject line if email is used. To help the Commission process and review your comments more efficiently, please use only one method. The Commission will post all comments on the Commission's Internet Web site (*http://www.sec.gov/rules/sro.shtml).* Copies of the submission, all subsequent amendments, all written statements with respect to the proposed rule change that are filed with the Commission, and all written communications relating to the proposed rule change between the Commission and any person, other than those that may be withheld from the public in accordance with the provisions of 5 U.S.C. 552, will be available for Web site viewing and printing in the Commission's Public Reference Room, 100 F Street NE., Washington, DC 20549, on official business days between the hours of 10:00 a.m. and 3:00 p.m. Copies of such filing also will be available for inspection and copying at the principal office of the Exchange. All comments received will be posted without change; the Commission does not edit personal identifying information from submissions. You should submit only information that you wish to make available publicly. All submissions should refer to File Number SR–ISE–2013–31, and should be submitted on or before May 15, 2013.

For the Commission, by the Division of Trading and Markets, pursuant to delegated authority.[8]

Kevin M. O'Neill,

Deputy Secretary.

[FR Doc. 2013–09655 Filed 4–23–13; 8:45 am]

BILLING CODE 8011–01–P

[6] 15 U.S.C. 78s(b)(3)(A)(ii).

[7] 17 CFR 240.19b–4(f)(2).

[8] 17 CFR 200.30–3(a)(12).

SECURITIES AND EXCHANGE COMMISSION

[Release No. 34–69393; File No. SR–ISE–2013–32]

Self-Regulatory Organizations; International Securities Exchange, LLC; Notice of Filing and Immediate Effectiveness of Proposed Rule Change To Amend the Market Maker Plus Rebate Program

April 18, 2013.

Pursuant to Section 19(b)(1) of the Securities Exchange Act of 1934 (the ''Act''),[1] and Rule 19b–4 thereunder,[2] notice is hereby given that on April 10, 2013, the International Securities Exchange, LLC (the ''Exchange'' or the ''ISE'') filed with the Securities and Exchange Commission the proposed rule change, as described in Items I, II, and III below, which items have been prepared by the self-regulatory organization. The Commission is publishing this notice to solicit comments on the proposed rule change from interested persons.

I. Self-Regulatory Organization's Statement of the Terms of Substance of the Proposed Rule Change

The ISE proposes to amend the Market Maker Plus rebate program. The text of the proposed rule change is available on the Exchange's Web site (*http://www.ise.com*), at the principal office of the Exchange, and at the Commission's Public Reference Room.

II. Self-Regulatory Organization's Statement of the Purpose of, and Statutory Basis for, the Proposed Rule Change

In its filing with the Commission, the self-regulatory organization included statements concerning the purpose of, and basis for, the proposed rule change and discussed any comments it received on the proposed rule change. The text of these statements may be examined at the places specified in Item IV below. The self-regulatory organization has prepared summaries, set forth in sections A, B and C below, of the most significant aspects of such statements.

A. Self-Regulatory Organization's Statement of the Purpose of, and the Statutory Basis for, the Proposed Rule Change

1. Purpose

The Exchange currently assesses per contract transaction fees and provides rebates to market participants that add or remove liquidity from the Exchange (''maker/taker fees and rebates'') in all symbols that are in the Penny Pilot program (the ''Select Symbols''). The fee change discussed below applies to both standard options and mini options traded on the Exchange. The Exchange's Schedule of Fees has separate tables for fees and rebates applicable to standard options and mini options. The Exchange notes that while the discussion below relates to fees and rebates for standard options, the fees and rebates for mini options, which are not discussed below, are and shall continue to be 1/10th of the fees and rebates for standard options.[3]

The Exchange's maker/taker fees and rebates apply to the following categories of market participants: (i) Market Maker;[4] (ii) Market Maker Plus; (iii)

[1] 15 U.S.C. 78s(b)(1).

[2] 17 CFR 240.19b–4.

[3] *See* SR–ISE–2013–28 (not yet published) [sic].

[4] The term ''Market Makers'' refers to ''Competitive Market Makers'' and ''Primary Market Makers'' collectively. *See* ISE Rule 100(a)(25).

Non-ISE Market Maker;[5] (iv) Firm Proprietary/Broker-Dealer; (v) Professional Customer;[6] and (vi) Priority Customer.[7] In order to promote and encourage liquidity in the Select Symbols, the Exchange currently offers a $0.10 per contract rebate to Market Makers if the quotes they send to the Exchange qualify the Market Maker to become a Market Maker Plus. The purpose of this proposed rule change is to amend the Exchange's Market Maker Plus rebate incentive.

A Market Maker Plus is a Market Maker who is on the National Best Bid or National Best Offer 80% of the time for series trading between $0.03 and $5.00 (for options whose underlying stock's previous trading day's last sale price was less than or equal to $100) and between $0.10 and $5.00 (for options whose underlying stock's previous trading day's last sale price was greater than $100) in premium in each of the front two expiration months and 80% of the time for series trading between $0.03 and $5.00 (for options whose underlying stock's previous trading day's last sale price was less than or equal to $100) and between $0.10 and $5.00 (for options whose underlying stock's previous trading day's last sale price was greater than $100) in premium for all expiration months in that symbol during the current trading month. A Market Maker's single best and single worst overall quoting days each month, on a per symbol basis, is excluded in calculating whether a Market Maker qualifies for this rebate, if doing so will qualify a Market Maker for the rebate.[8]

The Exchange now proposes to amend the fees and rebates for Market Makers who attain Market Maker Plus status. Specifically, Market Makers qualifying for Market Maker Plus in the Select Symbols will pay no fee and receive no rebate when providing liquidity against a Priority Customer Complex order that legs into the regular orderbook.

The Exchange currently provides Market Makers a report on a daily basis with quoting statistics so that Market Makers can determine whether or not they are meeting the Exchange's current stated criteria. The Exchange will continue to provide Market Makers a daily report so that Market Makers can track their quoting activity to determine whether or not they qualify for the Market Maker Plus rebate.

Since the rate changes to the Schedule of Fees pursuant to this proposal will be effective upon filing, for the transactions occurring in April 2013 prior to the effective date of this filing members will be assessed the rates in effect immediately prior to those proposed by this filing. For transactions occurring in April 2013 on and after the effective date of this filing, members will be assessed the rates proposed by this filing.

2. Statutory Basis

The Exchange believes that its proposal to amend its Schedule of Fees is consistent with Section 6(b) of the Securities and Exchange Act of 1934 (the ''Act'')[9] in general, and furthers the objectives of Section 6(b)(4) of the Act[10] in particular, in that it is an equitable allocation of reasonable dues, fees and other charges among Exchange members and other persons using its facilities. The impact of the proposal upon the net fees paid by a particular market participant will depend on a number of variables, most important of which will be its propensity to add or remove liquidity in the Select Symbols and a Market Maker's ability to qualify for Market Maker Plus status.

The Exchange has determined to charge fees and provide rebates for regular orders in mini options at a rate that is 1/10th the rate of fees and rebates the Exchange currently provides for trading in standard options. The Exchange believes it is reasonable and equitable and not unfairly discriminatory to assess lower fees and rebates to provide market participants an incentive to trade mini options on the Exchange. The Exchange believes the proposed fees and rebates are reasonable and equitable in light of the fact that mini options have a smaller exercise and assignment value, specifically 1/10th that of a standard option contract, and, as such, levying fees that are 1/10th of what market participants pay today.

The Exchange believes the proposed rule change to not charge Market Makers who qualify for Market Maker Plus status a fee or provide a rebate when providing liquidity against a Priority Customer complex order that legs into the regular orderbook is reasonable and equitable because the purpose of the Market Maker Plus rebate is to incent simple, non-complex order flow to the Exchange. The Exchange believes the proposed rule change is also reasonable and equitable because it will continue to differentiate Market Makers who meet higher quoting standards and thereby encourage them to continue to post narrow and liquid markets. The Exchange believes the proposed rule change will also encourage Market Makers to post tighter markets in the Select Symbols and thereby maintain liquidity and attract additional order flow to the Exchange. The Market Maker Plus rebate employed by the Exchange has proven to be an effective incentive for Market Makers to provide liquidity in the Select Symbols.

The Exchange believes the proposed rule change is not unfairly discriminatory because it will uniformly apply to all Market Makers on the Exchange. The Exchange further believes that the Exchange's Market Maker Plus rebate is not unfairly discriminatory because this rebate program is consistent with rebates that exist today at other options exchanges. The Exchange believes that the Market Maker Plus rebate is a competitive rebate and equivalent to incentives provided by other exchanges and is therefore reasonable and equitably allocated to those members that direct orders to the Exchange rather than to a competing exchange. The Exchange operates in a highly competitive market in which market participants can readily direct order flow to another exchange if they deem rebate levels at a particular exchange to be low.

B. Self-Regulatory Organization's Statement on Burden on Competition

ISE believes that the proposed rule change, which will maintain fees and rebates that are competitive and are within the range of fees and rebates charged by other exchanges for similar orders, will not impose any burden on competition that is not necessary or appropriate in furtherance of the purposes of the Act. Indeed, as noted above, the Exchange believes that the proposed change will promote competition among Market Makers, as it is designed to allow Market Makers to post tighter markets and compete for order flow and improve the Exchange's competitive position.

[5] A Non-ISE Market Maker, or Far Away Market Maker (''FARMM''), is a market maker as defined in Section 3(a)(38) of the Securities Exchange Act of 1934 registered in the same options class on another options exchange.

[6] A Professional Customer is a person who is not a broker/dealer and is not a Priority Customer.

[7] A Priority Customer is defined in ISE Rule 100(a)(37A) as a person or entity that is not a broker/dealer in securities, and does not place more than 390 orders in listed options per day on average during a calendar month for its own beneficial account(s).

[8] *See* Securities Exchange Act Release Nos. 62507 (July 15, 2010), 75 FR 42802 (July 22, 2010) (SR–ISE–2010–68); and 67039 (May 22, 2012), 77 FR 31680 (May 29, 2013) (SR–ISE–2012–39).

[9] 15 U.S.C. 78f(b).

[10] 15 U.S.C. 78f(b)(4).

C. Self-Regulatory Organization's Statement on Comments on the Proposed Rule Change Received From Members, Participants, or Others

The Exchange has not solicited, and does not intend to solicit, comments on this proposed rule change. The Exchange has not received any unsolicited written comments from members or other interested parties.

III. Date of Effectiveness of the Proposed Rule Change and Timing for Commission Action

The foregoing rule change has become effective pursuant to Section 19(b)(3)(A)(ii) of the Act [11] and subparagraph (f)(2) of Rule 19b–4 thereunder,[12] because it establishes a due, fee, or other charge imposed by ISE.

At any time within 60 days of the filing of the proposed rule change, the Commission summarily may temporarily suspend such rule change if it appears to the Commission that such action is necessary or appropriate in the public interest, for the protection of investors, or otherwise in furtherance of the purposes of the Act. If the Commission takes such action, the Commission shall institute proceedings to determine whether the proposed rule should be approved or disapproved.

IV. Solicitation of Comments

Interested persons are invited to submit written data, views, and arguments concerning the foregoing, including whether the proposed rule change is consistent with the Act. Comments may be submitted by any of the following methods:

Electronic Comments

- Use the Commission's Internet comment form (*http://www.sec.gov/rules/sro.shtml*); or
- Send an email to *rule-comments@sec.gov*. Please include File Number SR–ISE–2013–32 on the subject line.

Paper Comments

- Send paper comments in triplicate to Elizabeth M. Murphy, Secretary, Securities and Exchange Commission, 100 F Street NE., Washington, DC 20549–1090.

All submissions should refer to File Number SR–ISE–2013–32. This file number should be included on the subject line if email is used. To help the Commission process and review your comments more efficiently, please use only one method. The Commission will post all comments on the Commission's Internet Web site (*http://www.sec.gov/rules/sro.shtml)*. Copies of the submission, all subsequent amendments, all written statements with respect to the proposed rule change that are filed with the Commission, and all written communications relating to the proposed rule change between the Commission and any person, other than those that may be withheld from the public in accordance with the provisions of 5 U.S.C. 552, will be available for Web site viewing and printing in the Commission's Public Reference Room, 100 F Street NE., Washington, DC 20549, on official business days between the hours of 10:00 a.m. and 3:00 p.m. Copies of such filing also will be available for inspection and copying at the principal office of the Exchange. All comments received will be posted without change; the Commission does not edit personal identifying information from submissions. You should submit only information that you wish to make available publicly. All submissions should refer to File Number SR–ISE–2013–32, and should be submitted on or before May 15, 2013.

For the Commission, by the Division of Trading and Markets, pursuant to delegated authority.[13]

Kevin M. O'Neill,

Deputy Secretary.

[FR Doc. 2013–09653 Filed 4–23–13; 8:45 am]

BILLING CODE 8011–01–P

[11] 15 U.S.C. 78s(b)(3)(A)(ii).

[12] 17 CFR 240.19b–4(f)(2).

[13] 17 CFR 200.30–3(a)(12).

SECURITIES AND EXCHANGE COMMISSION

[Release No. 34–69396; File No. SR–ISE–2013–18]

Self-Regulatory Organizations; International Securities Exchange, LLC; Order Granting Approval of Proposed Rule Change To Address Order Handling Under the Options Order Protection and Locked/Crossed Market Plan, the Authority of the Exchange To Cancel Orders When a Technical or Systems Issue Occurs, and To Describe the Operation of Linkage Handler Error Accounts

April 18, 2013.

I. Introduction

On March 7, 2013, the International Securities Exchange, LLC (''Exchange'' or ''ISE'') filed with the Securities and Exchange Commission (''Commission''), pursuant to Section 19(b)(1) of the Securities Exchange Act of 1934 (''Act'') [1] and Rule 19b–4 thereunder,[2] a proposed rule change to address: (i) Order handling under the Options Order Protection and Locked/Crossed Market Plan; (ii) the authority of the Exchange to cancel orders (or release routing-related orders) when a technical or systems issue occurs; and (iii) describe the operation of Linkage Handler (defined below) error account(s), which may be used to liquidate unmatched executions that may occur in the provision of the Exchange's routing service. The proposed rule change was published for comment in the **Federal Register** on March 18, 2013.[3] The Commission received no comment letters regarding the proposed rule change. This order approves the proposed rule change.

II. Description of the Proposal

New Supplementary Material .02 to ISE Rule 1901 (Order Protection) and New ISE Rule 1903 (Order Routing to Other Exchanges)

In its proposal, the Exchange states that, under the Options Order Protection and Locked/Crossed Market Plan (''Plan''),[4] it cannot execute orders at a price that is inferior to the national best bid or offer (''NBBO''), nor can ISE place an order on its book that would cause the Exchange best bid or offer to lock or cross another exchange's quote.[5] The Exchange states that, in compliance with this requirement, incoming orders are not automatically executed at a price inferior to another exchange's protected bid or protected offer, nor placed on the limit order book if they would lock or cross an away market. ''Non-Customer Orders'' (orders for the account of a broker or dealer) [6] are rejected in these

[1] 15 U.S.C. 78s(b)(1).

[2] 17 CFR 240.19b–4.

[3] Securities Exchange Act Release No. 69114 (March 12, 2013), 78 FR 16733 (March 18, 2013) (SR–ISE–2013–18) (''Notice'').

[4] The Commission notes that the Plan is a national market system plan proposed by the options exchanges and approved by the Commission. *See* Securities Exchange Act Release No. 60405 (July 30, 2009), 74 FR 39362 (August 6, 2009) (File No. 4–546). ISE is a participant in the Plan. Among other things, the Plan requires each participant in the Plan to adopt rules that are reasonably designed to prevent trade-throughs and establish, maintain and enforce written rules that require its members to reasonably avoid displaying locked and crossed markets. *See* Sections 5 and 6 of the Plan.

[5] *See* Notice, 78 FR at 16733; *see also,* ISE Rules 1901 and 1902. The Commission notes that ISE Rules 1901 and 1902 were designed to implement certain of the Plan's requirements with respect to trade-throughs and locked and crossed markets. *See* Securities Exchange Act Release No. 60559 (August 21, 2009), 74 FR 44425 (August 28, 2009) (SR–ISE–2009–27).

[6] ISE Rule 100(a)(28).

circumstances, while ''Public Customer Orders'' (orders for the account of a person that is not a broker-dealer) [7] are handled by the Primary Market Maker.[8] Currently, Primary Market Makers [9] have the responsibility of either executing the Public Customer Order at a price that at least matches the NBBO or obtaining better prices from the away market(s) by sending one or more intermarket sweep orders (''ISOs'') on the Public Customer's behalf.[10] The Exchange proposes to amend its rules to remove the requirement that Primary Market Makers handle Public Customer Orders in the circumstances described above,[11] and to instead provide a centralized process for sending ISOs to other exchanges on behalf of Public Customer Orders. The Exchange proposes that it will contract with one or more unaffiliated brokers to route orders to other exchanges when necessary to comply with the linkage rules (''Linkage Handlers''). Specifically, in circumstances where marketable Public Customer Orders are received when the ISE is not at the NBBO or orders are received that would lock or cross another market, they will be exposed to ISE members for up to one second.[12] Under the proposed rules if, after a Public Customer Order is exposed, such order cannot be executed in full on the Exchange at the then-current NBBO or better and is marketable, the lesser of the full displayed size of the Protected Bid(s) or Protected Offer(s) that are priced better than the ISE's quote or the balance of the order will be sent to the Linkage Handler, and any additional balance of the order that is not marketable against the then-current NBBO will be placed on the ISE book.[13]

The Exchange proposes to adopt new ISE Rule 1903 (Order Routing to Other Exchanges), which would govern the Exchange's process for routing ISOs to other markets. As discussed above, the Exchange intends to contract with one or more Linkage Handlers that are not affiliated with the Exchange to route ISOs to other exchanges. The Exchange represents that any such contract will restrict the use of any confidential and proprietary information that the Linkage Handler receives to legitimate business purposes necessary for routing orders at the direction of the Exchange.[14] Routing services would be available to ISE members only and are optional. Members that do not want orders routed can use the ''Do Not Route'' designation to avoid routing.[15] Also, ISE is not approved to be a designated examining authority.[16]

New ISE Rule 1903 also provides that: (1) The Exchange shall establish and maintain procedures and internal controls reasonably designed to adequately restrict the flow of confidential and proprietary information between the Exchange and the Linkage Handler, and any other entity, including any affiliate of the Linkage Handler, and, if the Linkage Handler or any of its affiliates engages in any other business activities other than providing routing services to the Exchange, between the segment of the Linkage Handler or affiliate that provides the other business activities and the segment of the Linkage Handler that provides the routing services; (2) the Exchange will provide its routing services in compliance with the provisions of the Act and the rules thereunder, including, but not limited to, the requirements in Section 6(b)(4) and (5) of the Act that the rules of a national securities exchange provide for the equitable allocation of reasonable dues, fees, and other charges among its Members and other persons using its facilities, and not be designed to permit unfair discrimination between customers, issuers, brokers, or dealers; (3) the Exchange will determine the logic that provides when, how, and where orders are routed away to other exchanges; [17] (4) the Linkage Handler will receive routing instructions from the Exchange, to route orders to other exchanges and report such executions back to the Exchange and the Linkage Handler cannot change the terms of an order or the routing instructions, nor does the Linkage Handler have any discretion about where to route an order; and (5) any bid or offer entered on the Exchange routed to another exchange via a Linkage Handler that results in an execution shall be binding on the Member that entered such bid/offer.[18]

New ISE Rule 1904 (Order Cancellation/Release)

The Exchange is also proposing to adopt Rule 1904 (Order Cancellation/Release) which, the Exchange states, is designed to address the Exchange's authority to cancel orders (or release routing-related orders) when a technical or systems issue occurs. The Exchange states that paragraph (a) of Proposed Rule 1904 is designed to authorize the Exchange to cancel orders as it deems to be necessary to maintain fair and orderly markets if a technical or systems issue occurs at the Exchange,[19] the Linkage Handler, or another exchange to which an Exchange order has been routed. Paragraph (a) also provides that a Linkage Handler may only cancel orders being routed to another exchange

[7] ISE Rule 100(a)(39).

[8] ISE Rule 714(a).

[9] In addition to the obligations for market makers generally, a ''Primary Market Maker'' has certain responsibilities for options classes to which it is appointed as a Primary Market Maker. *See* ISE Rule 803(c).

[10] *See* Notice, 78 FR at 16734; and ISE Rule 803(c)(2).

[11] The Exchange proposes to eliminate Rule 803(c)(1)–(3) and Supplementary Material .02 to Rule 803, which addresses Primary Market Makers' obligations in handling Public Customer Orders.

[12] The current process for exposure is being moved from Supplementary Material .02 to Rule 803 to Supplementary Material .02 to Rule 1901.

[13] *See* Proposed Supplementary Material .02 to ISE Rule 1901. Any additional balance of the order will be executed on the ISE if it is marketable. Any additional balance of the order that is not marketable against the then-current NBBO will be placed on the ISE book.

[14] *See* Notice, 78 FR at 16734.

[15] *See id.*

[16] *See* Notice, 78 FR at 16734 n.14. The Commission notes that, therefore, ISE is not the designated examining authority for any Linkage Handlers. *See also,* email from Laura Clare, Assistant General Counsel, ISE, to Theodore S. Venuti, Senior Special Counsel (confirming (i) that neither the Exchange nor any of its affiliates is approved to be a designated examining authority and therefore, neither the Exchange nor any of its affiliates may be a designated examining authority for any of the Linkage Handlers, as defined in .03 of the Supplementary Material to Rule 1901; and (ii) to become a designated examining authority, the Exchange would need Commission approval and would also need to amend its rules governing linkage handling).

[17] The Exchange notes that this provision would not prohibit a Linkage Handler from complying with its obligations under Rule 15c3–5 under the Act. *See* Notice, 78 FR at 16734 n.15.

[18] Proposed Supplementary Material .01 to Rule 1903 states that the rule does not prohibit a Linkage Handler from designating a preferred market-maker (or equivalent market participant) at the other exchange to which an outbound ISO is being routed. The Exchange states that this proposed provision has no impact on customer orders, and does not disadvantage customers in any way. *See* Notice, 78 FR at 16734–35. The Exchange will still be making the sole determination as to which exchange an order will be routed, as well as when and how the order will be routed. *See id.*

Proposed Supplementary Material .02 to Rule 1903 is designed to address how the Exchange will handle orders in the event that there are no operable Linkage Handlers to provide routing services. In such circumstance, the Exchange will cancel orders that, if processed by the Exchange, would violate Rules 1901 (prohibition on trade-throughs) or 1902 (prohibition on locked and crossed markets). *See id.* at 16735.

[19] The Exchange states that the authority to cancel orders to maintain fair and orderly markets under proposed Rule 1904 would apply to any technical or systems issue at the Exchange and would include any orders at the Exchange (*i.e.,* the authority to cancel orders would apply to any orders that are subject to the Exchange's routing service and any orders that are not subject to the Exchange's routing service). By comparison, the routing service error account provisions under proposed Rule 1905 (discussed below) would apply to original and corresponding orders that are subject to the Exchange routing service. *See* Notice, 78 FR at 16735.

based on the Exchange's standing or specific instructions or as otherwise provided in the Exchange rules.[20] In addition, paragraph (a) provides that the Exchange shall provide notice of the cancelation of the Members' original order to affected Members as soon as practicable.

Paragraph (b) of Proposed Rule 1904 provides that the Exchange may also determine to release orders being held on the Exchange awaiting an away exchange execution as it deems to be necessary to maintain fair and orderly markets if a technical or systems issue occurs at the Exchange, a Linkage Handler, or another exchange to which an order has been routed.

Proposed Rule 1905 (Routing Service Error Accounts)

New ISE Rule 1905 provides that each Linkage Handler shall maintain, in the name of the Linkage Handler, one or more accounts for the purpose of liquidating unmatched trade positions that may occur in connection with the routing service provided under new ISE Rule 1903 (''error positions'').

Paragraph (a) of the rule provides that errors to which the rule applies include any action or omission by the Exchange, a Linkage Handler, or another exchange to which an Exchange order has been routed, that results in an unmatched trade position due to the execution of an order that is subject to the away market routing service and for which there is no corresponding order to pair with the execution (each a ''routing error''); and that such routing errors would include, without limitation, positions resulting from determinations by the Exchange to cancel or release an order pursuant to new ISE Rule 1904.

Paragraph (b) of the rule provides that error positions will be liquidated in a Linkage Handler's error account. Paragraph (c) of new ISE Rule 1905 requires that a Linkage Handler utilizing its error account to liquidate error positions shall liquidate the positions as soon as practicable. The Linkage Handler could determine to liquidate the position itself or have a third-party broker-dealer liquidate the position on the Linkage Handler's behalf. Paragraph (c)(i) provides that the routing broker shall establish and enforce policies and procedures reasonably designed to (1) adequately restrict the flow of confidential and proprietary information associated with the liquidation of the error position in accordance with Rule 1903 and (2) prevent the use of information associated with other orders subject to the routing services when making determinations regarding the liquidation of error positions. In addition, paragraph (c)(ii) provides that the Linkage Handler shall make and keep records associated with the liquidation of such error positions and shall maintain such records in accordance with Rule 17a–4 under the Act.[21]

Finally, paragraph (d) provides that the Exchange shall make and keep records to document all determinations to treat positions as error positions under the rule, and shall maintain such records in accordance with Rule 17a–1 under the Act.[22]

III. Discussion and Commission's Findings

After careful review, the Commission finds that the proposed rule change is consistent with the requirements of Section 6(b) of the Act[23] and the rules and regulations thereunder applicable to a national securities exchange.[24] In particular, the Commission finds that the proposed rule change is consistent with Section 6(b)(5) of the Act,[25] which requires, among other things, that the rules of a national securities exchange be designed to prevent fraudulent and manipulative acts and practices, to promote just and equitable principles of trade, to foster cooperation and coordination with persons engaged in regulating, clearing, settling, processing information with respect to, and facilitating transactions in securities, to remove impediments to and perfect the mechanism of a free and open market and a national market system, and, in general, to protect investors and the public interest; and are not designed to permit unfair discrimination between customers, issuers, brokers, or dealers. The Commission also believes the proposed rule change is consistent with Section 11A(a)(1)(C) of the Act[26] in that it seeks to assure economically efficient execution of securities transactions.

The Commission finds that ISE's proposed rules governing the routing of orders are consistent with the Act. As described above, the Exchange would contract with one or more Linkage Handlers that are not affiliated with the Exchange to route ISOs to other markets.[27] Further, the routing of orders would be optional;[28] and the Exchange would be responsible for routing decisions and would retain control of the routing logic.[29] None of ISE or its affiliates is approved to be a designated examining authority, and therefore, neither the Exchange, nor any affiliate of the Exchange,[30] may be the designated examining authority for a Linkage Handler absent Commission approval and amendment of ISE's rules governing the routing of orders by its Linkage Handlers.[31] The Commission also notes that the rule contemplates procedures and internal controls designed to protect confidential and proprietary information, which should help ensure that the Linkage Handlers do not misuse routing information obtained from the Exchange. In addition, the Exchange would provide its routing services in compliance with the Act and the rules thereunder, including but not limited to, the requirements in Sections 6(b)(4) and (5) of the Act[32] that the rules of a national securities exchange provide for the equitable allocation of reasonable dues, fees, and other charges among Exchange members and other persons using the Exchange's facilities, and not be designed to permit unfair discrimination between customers,

[20] The Exchange states that, in addition to being unaffiliated with the Exchange, the Linkage Handlers are not facilities of the Exchange. For all routing services, the Exchange determines the logic that provides when, how and where orders are routed away to other exchanges. The Linkage Handler receives the routing instructions from the Exchange to route orders to other exchanges and to report executions back to the Exchange. The Linkage Handler cannot change the terms of an order or the routing instructions, nor does the Linkage Handler have any discretion about where to route an order. *See* proposed Rule 1903(c), (d) and (e). Under paragraph (a) to proposed Rule 1904, the decision to take action with respect to orders affected by a technical or systems issue shall be made by the Exchange. Depending on where those orders are located, a Linkage Handler would be permitted to initiate a cancelation of an order(s) pursuant to the Exchange's standing or specific instructions or as otherwise provided in Exchange Rules (*e.g.,* the Exchange's standing instruction might provide, among other things, that the Linkage Handler could initiate the cancelation of orders if the Linkage Handler is experiencing technical or systems issues routing orders to an away exchange). *See* Notice, 78 FR at 16735 n.20.

[21] 17 CFR 240.17a–4. Because a Linkage Handler will be performing an Exchange function on a contractual basis and at the direction of the Exchange, the Exchange also proposes to exclude Linkage Handlers from the limits on compensation in ISE Rule 705(d). Instead, the Exchange states that such liability matters will be handled on a contractual basis as they are with other vendors or services to the Exchange. *See* Notice, 78 FR at 16737.

[22] 17 CFR 240.17a–1.

[23] 15 U.S.C. 78f(b).

[24] In approving this proposed rule change, the Commission has considered the proposed rule's impact on efficiency, competition, and capital formation. *See* 15 U.S.C. 78c(f).

[25] 15 U.S.C. 78f(b)(5).

[26] 15 U.S.C. 78k–1(a)(1)(C).

[27] The Commission notes that Linkage Handlers would be required to comply with Rule 15c3–5 under the Act. *See supra* note 17.

[28] Members may choose to avoid routing by using the Do Not Route designation. *See supra* note 15 and accompanying text.

[29] *See* proposed ISE Rule 1903(d) and (e).

[30] *See supra* note 16 and accompanying text.

[31] *See id.*

[32] 15 U.S.C. 78f(b)(4) and (5).

brokers, or dealers.[33] The Commission notes that such rules governing the routing of orders by Linkage Handlers should help ISE comply with its responsibility under the Plan.[34]

The Commission recognizes that technical or systems issues may occur, and believes that new ISE Rule 1904, in allowing ISE to cancel or release orders affected by technical or systems issues, should provide a reasonably efficient means for ISE to handle such orders, and appears reasonably designed to permit ISE to maintain fair and orderly markets.[35]

The Commission also believes that allowing the Exchange to resolve error positions through the use of error accounts maintained by each Linkage Handler pursuant to the procedures set forth in the rule, and as described above, is consistent with the Act.[36] The Commission notes that the rule establishes criteria for determining which positions are error positions to which the rule applies, and the procedures for the handling of such positions. In particular, the Commission notes that Proposed ISE Rule 1905 only applies to error positions that result from the Linkage Handler's routing service, and that such positions shall be liquidated by the Linkage Handler, as applicable, as soon as practicable.[37] In this regard, the Commission believes that the new rule appears reasonably designed to further just and equitable principles of trade and the protection of investors and the public interest, and to help prevent unfair discrimination, in that it should help assure the handling of error positions will be based on clear and objective criteria, and that the resolution of those positions will occur promptly through a transparent process.

The Commission is also concerned about the potential for misuse of confidential and proprietary information. The Commission notes that Linkage Handlers will be required to establish and enforce policies and procedures reasonably designed to (1) adequately restrict the flow of confidential and proprietary information associated with the liquidation of the error positions, and (2) prevent the use of information associated with other orders subject to the routing services when making determinations regarding the liquidation of error positions.[38] The Commission believes that these requirements should help mitigate the Commission's concerns. In particular, the Commission believes that these requirements should help assure that none of ISE, its Linkage Handlers, or any third-party broker-dealer is able to misuse confidential or proprietary information obtained in connection with the liquidation of error positions for its own benefit. The Commission also notes that each Linkage Handler would be required to make and keep records associated with the liquidation of error positions [39] and ISE would be required to make and keep records to document all determinations to treat positions as error positions under this Rule.[40]

Finally, the Commission notes that the proposed procedures for routing orders, canceling orders and the handling of error positions are similar to procedures the Commission has approved for other exchanges.[41]

IV. Conclusion

It is therefore ordered, pursuant to Section 19(b)(2) of the Act,[42] that the proposed rule change (SR–ISE–2013–18) be, and it hereby is, approved.

For the Commission, by the Division of Trading and Markets, pursuant to delegated authority.[43]

Kevin M. O'Neill,

Deputy Secretary.

[FR Doc. 2013–09625 Filed 4–23–13; 8:45 am]

BILLING CODE 8011–01–P

[33] *See* proposed ISE Rule 1903(c).

[34] *See supra* note 4.

[35] The Commission notes that ISE states that it believes that allowing the Exchange to cancel or release orders under such circumstances would allow the Exchange to maintain fair and orderly markets, and that new ISE Rule 1905 is designed ensure full trade certainty for market participants and avoid disrupting the clearance and settlement process. *See* Notice, 78 FR at 16737. The Commission also notes that ISE states that a decision to cancel or release orders due to a technical or systems issue is not equivalent to the Exchange declaring self-help against another exchange pursuant to ISE Rule 1905. *See* 17 CFR 242.611(b). *See also* Notice, 78 FR at 16735 n.21.

[36] The Commission notes that ISE states that it believes that it is reasonable and appropriate to address routing errors through the error account of a Linkage Handler in the manner proposed because, among other reasons, the Linkage Handler is the executing broker associated with such transactions. *See* Notice, 78 FR at 16736.

[37] *See* ISE Rule 1905(c).

[38] *See* ISE Rule 1905(c)(i).

[39] *See* ISE Rule 1905(c)(ii).

[40] *See* ISE Rule 1905(d). The Commission notes that the Exchange will transition options classes from the current process to the new proposed process using Linkage Handlers over a period of time and will notify its members via information circular as products are transitioned.

[41] *See, e.g.,* Securities Exchange Act Release Nos. 68583 (January 4, 2013), 78 FR 2302 (January 10, 2013) (SR–C2–2012–038); 68584 (January 4, 2013), 78 FR 2304 (January 10, 2013) (SR–CBOE–2012–109); 68585 (January 4, 2013), 78 FR 2308 (January 10, 2013) (SR–CBOE–2012–108); and 60551 (August 20, 2009), 74 FR 43196 (August 26, 2009) (SR–CBOE–2009–040).

[42] 15 U.S.C. 78s(b)(2).

[43] 17 CFR 200.30–3(a)(12).

SECURITIES AND EXCHANGE COMMISSION

[Release No. 34–69397; File No. SR–NYSEArca–2013–18]

Self-Regulatory Organizations; NYSE Arca, Inc.; Order Granting Approval of Proposed Rule Change, as Modified by Amendment No. 1 Thereto, To List and Trade Fourteen Series of the iShares Trust Under NYSE Arca Equities Rule 8.600

April 18, 2013.

I. Introduction

On February 14, 2013, NYSE Arca, Inc. (''Exchange'' or ''NYSE Arca'') filed with the Securities and Exchange Commission (''Commission''), pursuant to Section 19(b)(1) of the Securities Exchange Act of 1934 (''Act'') [1] and Rule 19b–4 thereunder,[2] a proposed rule change to list and trade shares (''Shares'') of fourteen series of the iShares Trust (''Trust''). The proposed rule change was published for comment in the **Federal Register** on March 6, 2013.[3] The Commission received no comments on the proposal. On April 2, 2013, the Exchange filed Amendment No. 1 to the proposed rule change.[4] This order grants approval of the proposed rule change, as modified by Amendment No. 1 thereto.

II. Description of the Proposed Rule Change

The Exchange proposes to list and trade the Shares of the iShares Australian Dollar Cash Rate Fund; iShares British Pound Cash Rate Fund; iShares Canadian Dollar Cash Rate

[1] 15 U.S.C. 78s(b)(1).

[2] 17 CFR 240.19b–4.

[3] *See* Securities Exchange Act Release No. 69008 (February 28, 2013), 78 FR 14600 (''Notice'').

[4] In Amendment No. 1, the Exchange clarified that the variable rate demand notes that may be purchased by the Funds (as defined herein) would be backed by a letter of credit from a highly rated bank or financial institution that meets certain credit standards and that the Funds would purchase such variable rate demand notes with hard one or seven-day put options. In addition, the Exchange clarified that the net asset value (''NAV'') for the iShares New Zealand Dollar Cash Rate Fund would be determined on each business day as of the value date roll-over in New Zealand, which would ordinarily be 7:00 a.m., New Zealand time (which would be 1:00 p.m., 2:00 p.m., or 3:00 p.m. Eastern Time or ''E.T.'' the prior day, depending on daylight savings time). The Exchange further clarified that fair value determinations would be made in accordance with the requirements of the Investment Company Act of 1940 (''1940 Act''). Finally, the Exchange made a number of technical changes to the proposed rule change. Because the changes made by the Exchange in Amendment No. 1 do not materially alter the substance of the proposed rule change and do not raise any novel or unique regulatory issues, Amendment No. 1 is not subject to notice and comment.

Fund; iShares Chinese Offshore Renminbi Cash Rate Fund; iShares Euro Cash Rate Fund; iShares Japanese Yen Cash Rate Fund; iShares Mexican Peso Cash Rate Fund; iShares New Zealand Dollar Cash Rate Fund; iShares Norwegian Krone Cash Rate Fund; iShares Singapore Dollar Cash Rate Fund; iShares Swedish Krona Cash Rate Fund; iShares Swiss Franc Cash Rate Fund; iShares Thai Offshore Baht Cash Rate Fund; and iShares Turkish Lira Cash Rate Fund (each, a ''Fund'' and, collectively, the ''Funds'') under NYSE Arca Equities Rule 8.600, which governs the listing and trading of Managed Fund Shares on the Exchange. The Shares will be offered by iShares Trust, a statutory trust organized under the laws of Delaware and registered with the Securities and Exchange Commission as an open-end management investment company.[5]

The investment adviser to the Funds will be BlackRock Fund Advisors (''Investment Adviser''), an indirect wholly-owned subsidiary of BlackRock, Inc. BlackRock Investments, LLC, an affiliate of the Investment Adviser, will serve as the distributor for the Funds. State Street Bank and Trust Company will serve as the administrator, custodian, and transfer agent for each Fund. According to the Exchange, the Investment Adviser is affiliated with multiple broker-dealers and has implemented a ''fire wall'' with respect to such broker-dealers regarding access to information concerning the composition and/or changes to the Funds' portfolio.[6]

Summary of the Funds

Each Fund generally will seek to provide its shareholders a daily return that reflects: (i) The increase or decrease in the exchange rate of the foreign currency identified in its name (''FX Base Currency'') against the United States dollar; and (ii) the yield of the FX Base Currency, minus the Fund's fees and expenses. ''Yield'' refers to the yield an investor would expect to receive if they invested in an overnight or similar cash or cash equivalent investment denominated in the FX Base Currency. Each Fund also will seek to preserve liquidity, and maintain stability of principal and preserve capital, as measured in the FX Base Currency.

According to the Registration Statement, each Fund will be an actively managed exchange-traded fund that will seek to achieve its investment objective by investing, under normal circumstances,[7] substantially all of its assets in short-term securities denominated in United States dollars and a matching notional amount of spot foreign exchange contracts (generally required to be settled within two business days) to purchase the FX Base Currency (against delivery of the United States dollar). Under normal circumstances, there will be a 1:1 ratio between the fixed income securities and spot contracts. The strategy of combining investments in short-term fixed income securities and spot foreign exchange contracts is designed to provide financial exposure substantially similar to a purchase of the FX Base Currency, reflecting: (i) The increase or decrease in the exchange rate of the FX Base Currency against the United States dollar; and (ii) the yield of the FX Base Currency, minus the Fund's fees and expenses.

According to the Registration Statement, each Fund will invest in United States dollar denominated short-term debt securities of varying maturities and spot foreign exchange contracts in order to seek to replicate the daily return of the FX Base Currency. The short-term debt securities held by the each Fund generally will consist of high quality debt obligations and may include, but are not limited to, obligations issued by the U.S. government and its agencies and instrumentalities, U.S. municipal variable rate demand notes,[8] U.S. corporate and commercial debt instruments,[9] and bank notes and similar demand deposits. Each Fund's assets also may be invested in short-term debt instruments and bank notes and similar demand deposits denominated in the FX Base Currency from time to time when the Investment Adviser believes these debt securities may help the Fund achieve its investment objective. All short-term debt securities acquired by each Fund will be rated investment grade by at least one nationally recognized statistical rating organization (''NRSRO'') or, if unrated, deemed by the Investment Adviser to be of equivalent quality.[10] Each Fund may also invest its assets in money market funds (including funds that are managed by the Investment Adviser or one of its affiliates), cash, and cash equivalents. All money market securities acquired by each Fund will be rated investment grade. The Funds do not intend to invest in any unrated money market securities. However, a Fund may do so, to a limited extent, such as where a rated money market security becomes unrated, if such money market security is determined by the Investment Adviser to be of comparable quality.

According to the Registration Statement, each Fund generally will maintain a weighted average portfolio maturity of between 1 and 30 days and generally will be limited to investments with remaining maturities of 60 days or less. The Funds will not purchase any security with a remaining maturity of more than 397 calendar days.

According to the Registration Statement, generally, each spot foreign exchange contract entered into by each Fund will require such Fund to

[5] The Trust is registered under the 1940 Act. On August 9, 2012, the Trust filed with the Commission a post-effective amendment to Form N–1A under the Securities Act of 1933 and the 1940 Act relating to the Funds (File Nos. 333–92935 and 811–09729) (''Registration Statement''). The Commission has issued an order granting certain exemptive relief to the Trust under the 1940 Act. *See* Investment Company Act Release No. 29571 (January 24, 2011) (File No. 812–13601).

[6] *See* NYSE Arca Equities Rule 8.600, Commentary .06. In the event (a) the Investment Adviser or any sub-adviser becomes newly affiliated with a broker-dealer, or (b) any new manager, adviser, or sub-adviser becomes affiliated with a broker-dealer, it will implement a fire wall with respect to such broker-dealer regarding access to information concerning the composition and/or changes to the portfolio, and will be subject to procedures designed to prevent the use and dissemination of material, non-public information regarding such portfolio.

[7] The term ''under normal circumstances'' includes, but is not limited to, the absence of adverse market, economic, political or other conditions, including extreme volatility or trading halts in the fixed income markets or the financial markets generally; operational issues causing dissemination of inaccurate market information; or force majeure type events such as systems failure, natural or man-made disaster, act of God, armed conflict, act of terrorism, riot or labor disruption, or any similar intervening circumstance.

[8] According to the Exchange, variable rate demand obligations (also referred to as variable rate demand notes) are tax-exempt obligations that contain a floating or variable interest rate adjustment formula and a right of demand on the part of the holder thereof to receive payment of the unpaid principal balance plus accrued interest upon a short notice period not to exceed seven days.

[9] Each Fund will invest only in corporate bonds that the Investment Adviser deems to be sufficiently liquid at time of investment. Generally a non-U.S. corporate bond must have $200 million (or an equivalent value if denominated in a currency other than United States dollars) or more par amount outstanding and significant par value traded to be considered as an eligible investment, and a U.S. corporate bond must have $100 million (or an equivalent value if denominated in a currency other than United States dollars) or more par amount outstanding and significant par value traded to be considered as an eligible investment.

[10] According to the Investment Adviser, the Investment Adviser may determine that unrated securities are of ''equivalent quality'' based on such credit quality factors that it deems appropriate, which may include, among other things, performing an analysis similar, to the extent possible, to that performed by an NRSRO when rating similar securities and issuers. In making such a determination, the Investment Adviser may consider internal analyses and risk ratings, third party research and analysis, and other sources of information, as deemed appropriate by the Investment Adviser.

purchase from a foreign exchange dealer selected by the Investment Adviser, at a specified purchase price expressed in United States dollars, a specified amount of the FX Base Currency. Each Fund will enter into spot foreign exchange contracts only in the FX Base Currency and mainly for the purpose of taking long positions in the FX Base Currency. Because the spot foreign exchange contracts entered into by each Fund will be spot transactions and typically settle within two business days, in order to maintain exposure to the FX Base Currency, each Fund will continuously enter into new spot foreign exchange contracts by entering into two simultaneous trades.[11] The Funds will not enter into forward foreign exchange contracts. Each Fund is classified as ''non-diversified.'' [12]

Other Investments

In addition to the principal investments described above, each Fund will invest in other short-term instruments, including other money market instruments, on an ongoing basis to provide liquidity or for other reasons. While each Fund may invest in money market instruments as part of its principal investment strategies, the Investment Adviser expects that, under normal circumstances, each Fund also intends to invest in money market securities in a manner consistent with its investment objective in order to help manage cash flows in and out of the Fund, such as in connection with payment of dividends or expenses, and to satisfy margin requirements, or to provide collateral.[13] All money market securities acquired by the Funds will be rated investment grade. The Funds do not intend to invest in any unrated money market securities. However, a Fund may do so, to a limited extent, such as where a rated money market security becomes unrated, if such money market security is determined by the Investment Adviser to be of comparable quality.

Each Fund may hold up to 15% of its net assets in securities that are illiquid (calculated at the time of investment), including Rule 144A Securities. The aggregate value of all of a Fund's illiquid securities and Rule 144A Securities shall not exceed 15% of a Fund's total assets. *Each* Fund will monitor its portfolio liquidity on an ongoing basis to determine whether, in light of current circumstances, an adequate level of liquidity is being maintained, and will consider taking appropriate steps in order to maintain adequate liquidity if, through a change in values, net assets, or other circumstances, more than 15% of a Fund's net assets are held in illiquid securities.

A Fund may not concentrate its investments (*i.e.,* invest 25% or more of its total assets in the securities of a particular industry or industry group), provided that this restriction does not limit a Fund's: (i) Investments in its FX Base Currency; (ii) investments in securities of other investment companies; (iii) investments in securities issued or guaranteed by the U.S. government, its agencies, or instrumentalities, certificates of deposit, and bankers' acceptances; (iv) investments in repurchase agreements collateralized by U.S. government securities; or (v) investments in U.S. municipal securities.

Each Fund intends to qualify as a regulated investment company under Subchapter M of Subtitle A, Chapter 1, of the Internal Revenue Code. The Funds will not invest in any non-U.S registered equity securities and will not invest in options contracts, futures contracts, or swap agreements. Each Fund's investments will be consistent with the Fund's investment objective and will not be used to enhance leverage.

Additional information regarding the individual Funds (including additional details regarding the underlying FX Base Currencies and descriptions of the relevant FX Base Currency spot markets), investment strategies, risks, creation and redemption procedures, fees, portfolio holdings and disclosure policies, dissemination of key values, including NAV, and distributions, among other information, are included in the Notice and Registration Statement, as applicable.[14]

III. Discussion and Commission's Findings

After careful review, the Commission finds that the proposed rule change is consistent with the requirements of Section 6 of the Act [15] and the rules and regulations thereunder applicable to a national securities exchange.[16] In particular, the Commission finds that the proposal is consistent with Section 6(b)(5) of the Act,[17] which requires, among other things, that the Exchange's rules be designed to promote just and equitable principles of trade, to remove impediments to and perfect the mechanism of a free and open market and a national market system, and, in general, to protect investors and the public interest. The Commission notes that the Shares of each Fund will be listed and traded on the Exchange pursuant to the initial and continued listing criteria in NYSE Arca Equities Rule 8.600.

The Commission finds that the proposal to list and trade the Shares on the Exchange is consistent with Section 11A(a)(1)(C)(iii) of the Act,[18] which sets forth Congress' finding that it is in the public interest and appropriate for the protection of investors and the maintenance of fair and orderly markets to assure the availability to brokers, dealers, and investors of information with respect to quotations for, and transactions in, securities. Information regarding market price and trading volume of the Shares will be continually available on a real-time basis throughout the day on brokers' computer screens and other electronic services, and quotation and last-sale information for the Shares will be available via the Consolidated Tape Association (''CTA'') high-speed line. In addition, intra-day, closing, and settlement prices or other

[11] According to the Exchange, a Fund will maintain exposure to its FX Base Currency by entering into two simultaneous trades that result in the same open net long position of the FX Base Currency with the settlement date extended by one business day. The first trade will be an offsetting transaction to the original position (which is the long foreign exchange contract that such Fund has entered into on the previous day) for the same notional amount and same settlement date. This offsetting transaction may cause a Fund to realize a gain or loss on the transaction. The second trade will be for the same notional amount as the original position with the settlement date extended by one business day. Where there is an interest rate differential in the overnight ''risk free'' rate between the FX Base Currency and the United States dollar, there will be a difference in price between the two trades of the simultaneous transaction. This difference represents the difference in benchmark overnight interest rates between the two currencies in the position (*i.e.,* one day of ''carry'' or ''cost of carry'').

[12] According to the Exchange, each Fund will be ''non-diversified'' under the 1940 Act and may invest more of its assets in fewer issuers than ''diversified'' funds. The diversification standard is set forth in Section 5(b)(1) of the 1940 Act (15 U.S.C. 80a–5(b)(1)).

[13] For the Funds' purposes, money market securities include: short-term, high-quality obligations issued or guaranteed by the U.S. Treasury or the agencies or instrumentalities of the U.S. government; short-term, high-quality securities issued or guaranteed by non-U.S. governments, agencies, and instrumentalities; non-convertible corporate debt securities with remaining maturities of not more than 397 days that satisfy ratings requirements under Rule 2a–7 of the 1940 Act; repurchase agreements backed by U.S. government securities; money market mutual funds; commercial paper; U.S. municipal variable rate demand notes; and deposits and other obligations of U.S. and non-U.S. banks and financial institutions.

[14] *See* Notice and Registration Statement, *supra* notes 3 and 5, respectively.

[15] 15 U.S.C. 78f.

[16] In approving this proposed rule change, the Commission has considered the proposed rule's impact on efficiency, competition, and capital formation. *See* 15 U.S.C. 78c(f).

[17] 17 U.S.C. 78f(b)(5).

[18] 15 U.S.C. 78k–1(a)(1)(C)(iii).

values of the debt securities, fixed income instruments, and other investments held by the Funds are also generally readily available from the national securities exchanges trading such securities, automated quotation systems, published or other public sources, or on-line information services such as Bloomberg or Reuters. Foreign currency exchange rates are generally readily available from on-line information services such as Bloomberg or Reuters. Each Fund's Portfolio Indicative Value (''PIV''), as defined in NYSE Arca Equities Rule 8.600(c)(3), will be widely disseminated by one or more major market data vendors at least every 15 seconds during the Exchange's Core Trading Session.[19] On each business day, before commencement of trading in Shares in the Core Trading Session on the Exchange, the Funds will disclose on their Web site the Disclosed Portfolio, as defined in NYSE Arca Equities Rule 8.600(c)(2), that will form the basis for each Fund's calculation of NAV at the end of the business day.[20] The NAV for each Fund normally will be determined once daily Monday through Friday, generally as of the regularly scheduled close of business of the New York Stock Exchange (''NYSE'') (normally 4:00 p.m. E.T.), on each day that the NYSE is open for trading. The Web site for the Funds will include a form of the prospectus for the Fund and additional data relating to NAV and other applicable quantitative information. In addition, a basket composition file, which will include the security names and share quantities, if applicable, required to be delivered in exchange for a Fund's Shares, together with estimates and actual cash components, will be publicly disseminated daily prior to the opening of the NYSE via the National Securities Clearing Corporation.

The Commission further believes that the proposal to list and trade the Shares is reasonably designed to promote fair disclosure of information that may be necessary to price the Shares appropriately and to prevent trading when a reasonable degree of transparency cannot be assured. The Exchange will obtain a representation from the issuer of the Shares that the NAV per Share will be calculated daily and that the NAV and the Disclosed Portfolio will be made available to all market participants at the same time. Trading in Shares of the Fund will be halted if the circuit breaker parameters in NYSE Arca Equities Rule 7.12 have been reached or because of market conditions or for reasons that, in the view of the Exchange, make trading in the Shares inadvisable,[21] and trading in the Shares will be subject to NYSE Arca Equities Rule 8.600(d)(2)(D), which sets forth additional circumstances under which Shares of the Fund may be halted. The Exchange states that it has a general policy prohibiting the distribution of material, non-public information by its employees. Consistent with NYSE Arca Equities Rule 8.600(d)(2)(B)(ii), the Reporting Authority must implement and maintain, or be subject to, procedures designed to prevent the use and dissemination of material, non-public information regarding the actual components of the Funds' portfolios. The Investment Adviser has implemented a ''fire wall'' with respect to its affiliated broker-dealers regarding access to information concerning the composition and/or changes to each Fund's portfolio.[22] The Commission also notes that the Financial Industry Regulatory Authority (''FINRA''), on behalf of the Exchange,[23] will communicate as needed regarding trading in the Shares with other markets that are members of the Intermarket Surveillance Group (''ISG'') or with which the Exchange has in place a comprehensive surveillance sharing agreement. Moreover, prior to the commencement of trading, the Exchange will inform its Equity Trading Permit Holders in an Information Bulletin of the special characteristics and risks associated with trading the Shares.

The Exchange represents that the Shares are deemed to be equity securities, thus rendering trading in the Shares subject to the Exchange's existing rules governing the trading of equity securities. In support of this proposal, the Exchange has made representations, including:

(1) The Shares will conform to the initial and continued listing criteria under NYSE Arca Equities Rule 8.600.

(2) The Exchange has appropriate rules to facilitate transactions in the Shares during all trading sessions.

(3) The Exchange represents that trading in the Shares will be subject to the existing trading surveillances, administered by FINRA on behalf of the Exchange, which are designed to detect violations of Exchange rules and applicable federal securities laws and that these procedures are adequate to properly monitor Exchange trading of the Shares in all trading sessions and to deter and detect violations of Exchange rules and applicable federal securities laws.

(4) Prior to the commencement of trading, the Exchange will inform its Equity Trading Permit Holders in an Information Bulletin of the special characteristics and risks associated with trading the Shares. Specifically, the Information Bulletin will discuss the following: (a) The procedures for purchases and redemptions of Shares in aggregations equal to or greater than the relevant Fund's Minimum Subscription Size (and that Shares are not individually redeemable); (b) NYSE

[19] According to the Exchange, several major market data vendors display and/or make widely available PIVs published on the CTA or other data feeds. The PIV will be based on the current value of the securities, spot foreign exchange contracts, and/or cash required to be deposited in exchange for Fund Shares. The Exchange notes that the PIV will not necessarily reflect the precise composition of the current portfolio of securities held by a Fund at a particular point in time or the best possible valuation of the current portfolio. Therefore, the PIV should not be viewed as a ''real-time'' update of each Fund's NAV, which is computed only once a day. The PIV will be generally determined by using both current market quotations and/or price quotations obtained from broker-dealers that may trade in the portfolio securities and other instruments held by the Funds.

[20] On a daily basis, the Funds will disclose for each portfolio security and other financial instruments the following information: ticker symbol (if applicable); name of securities and financial instruments; number of shares or dollar value of securities and financial instruments held in the portfolio; and percentage weighting of the securities and financial instruments in the portfolio.

[21] These reasons may include: (1) The extent to which trading is not occurring in the securities and/or the financial instruments composing the Disclosed Portfolio of a Fund; or (2) whether other unusual conditions or circumstances detrimental to the maintenance of a fair and orderly market are present.

[22] *See* note 6, *supra* and accompanying text. The Commission notes that an investment adviser to an open-end fund is required to be registered under the Investment Advisers Act of 1940 (''Advisers Act''). As a result, the Investment Adviser and its related personnel are subject to the provisions of Rule 204A–1 under the Advisers Act relating to codes of ethics. This Rule requires investment advisers to adopt a code of ethics that reflects the fiduciary nature of the relationship to clients as well as compliance with other applicable securities laws. Accordingly, procedures designed to prevent the communication and misuse of non-public information by an investment adviser must be consistent with Rule 204A–1 under the Advisers Act. In addition, Rule 206(4)–7 under the Advisers Act makes it unlawful for an investment adviser to provide investment advice to clients unless such investment adviser has (i) adopted and implemented written policies and procedures reasonably designed to prevent violation, by the investment adviser and its supervised persons, of the Advisers Act and the Commission rules adopted thereunder; (ii) implemented, at a minimum, an annual review regarding the adequacy of the policies and procedures established pursuant to subparagraph (i) above and the effectiveness of their implementation; and (iii) designated an individual (who is a supervised person) responsible for administering the policies and procedures adopted under subparagraph (i) above

[23] The Exchange states that, while FINRA surveils trading on the Exchange pursuant to a regulatory services agreement, the Exchange is responsible for FINRA's performance under this regulatory services agreement.

Arca Equities Rule 9.2(a), which imposes a duty of due diligence on its Equity Trading Permit Holders to learn the essential facts relating to every customer prior to trading the Shares; (c) the risks involved in trading the Shares during the Opening and Late Trading Sessions when an updated PIV will not be calculated or publicly disseminated; (d) how information regarding the PIV is disseminated; (e) the requirement that Equity Trading Permit Holders deliver a prospectus to investors purchasing newly issued Shares prior to or concurrently with the confirmation of a transaction; and (f) trading information.

(5) For initial and/or continued listing, the Fund will be in compliance with Rule 10A–3 under the Act,[24] as provided by NYSE Arca Equities Rule 5.3.

(6) The Funds will not invest in any non-U.S registered equity securities. The Funds will not invest in options contracts, futures contracts, or swap agreements. Each Fund may hold up to 15% of its net assets in securities that are illiquid (calculated at the time of investment), including Rule 144A Securities. The aggregate value of all of a Fund's illiquid securities and Rule 144A Securities shall not exceed 15% of a Fund's total assets.

(7) All short-term debt and money market securities acquired by the Funds will be rated investment grade by at least one NRSRO or, if unrated, deemed by the Investment Adviser to be of equivalent quality. The Fund will invest only in corporate bonds that the Investment Adviser deems to be sufficiently liquid at time of investment. Generally a non-U.S. corporate bond must have $200 million (or an equivalent value if denominated in a currency other than United States dollars) or more par amount outstanding and significant par value traded to be considered as an eligible investment, and a U.S. corporate bond must have $100 million (or an equivalent value if denominated in a currency other than United States dollars) or more par amount outstanding and significant par value traded to be considered as an eligible investment. In addition, variable rate demand notes purchased by the Funds will be backed by a letter of credit provided by a highly rated bank or financial institution that meets credit standards deemed appropriate by the Investment Adviser. According to the Exchange, the Funds will purchase variable rate demand notes with hard one or seven-day put options, which will increase the liquidity profile within the Funds that hold them, since they can be converted to cash within one or seven days.

(8) Each Fund's investments will be consistent with such Fund's investment objective and will not be used to enhance leverage.

(9) A minimum of 100,000 Shares of each Fund will be outstanding at the commencement of trading on the Exchange.

This approval order is based on all of the Exchange's representations, including those set forth above and in the Notice, and the Exchange's description of the Funds.

For the foregoing reasons, the Commission finds that the proposed rule change, as modified by Amendment No. 1 thereto, is consistent with Section 6(b)(5) of the Act[25] and the rules and regulations thereunder applicable to a national securities exchange.

IV. Conclusion

It is therefore ordered, pursuant to Section 19(b)(2) of the Act,[26] that the proposed rule change (SR–NYSEArca-2013–18), as modified by Amendment No. 1 thereto, be, and it hereby is, approved.

For the Commission, by the Division of Trading and Markets, pursuant to delegated authority.[27]

Kevin M. O'Neill,

Deputy Secretary.

[FR Doc. 2013–09626 Filed 4–23–13; 8:45 am]

BILLING CODE 8011–01–P

[24] *See* 17 CFR 240.10A–3.

[25] 15 U.S.C. 78f(b)(5).

[26] 15 U.S.C. 78s(b)(2).

[27] 17 CFR 200.30–3(a)(12).

SECURITIES AND EXCHANGE COMMISSION

[Release No. 34–69417; File No. SR–Phlx–2013–03]

Self-Regulatory Organizations; NASDAQ OMX PHLX LLC; Order Approving a Proposed Rule Change, as Modified by Amendment No. 1, To Amend Exchange Rules 507 and 1014 To Establish Remote Streaming Quote Trader Organizations

April 19, 2013.

I. Introduction

On January 4, 2013, NASDAQ OMX PHLX LLC (''Exchange'') filed with the Securities and Exchange Commission (''Commission''), pursuant to Section 19(b)(1) of the Securities Exchange Act of 1934 (''Act''), and Rule 19b–4 thereunder, a proposed rule change to amend Exchange Rules 507 and 1014 to establish Remote Streaming Quote Trader Organizations. The proposed rule change was published in the **Federal Register** on January 25, 2013.[1] On March 8, 2013, the Exchange filed an extension to extend the action date to March 25, 2013. On March 22, 2013, the Exchange filed a second extension to extend the action date to April 8, 2013. On April 8, 2013, the Exchange filed a third extension to extend the action date to April 22, 2013. On April 16, 2013, the Exchange filed Partial Amendment No. 1 to the proposal.[2] The Commission received no comments on the proposal. This order approves the proposal, as modified by Amendment No. 1.

II. Description of the Proposal

The Exchange proposes to add a new category of member organizations, called Remote Streaming Quote Trader Organizations (''RSQTOs''), to be eligible to register as Registered Options Traders (''ROTs'') on the Exchange. A ROT is an Exchange member located on the trading floor who trades in options for his own account.[3] The term ROT includes a Streaming Quote Trader (''SQT'') and a Remote Streaming Quote Trader (''RSQT'').

Currently, a ROT may apply to be an SQT and an RSQT.[4] An SQT generates and submits option quotes electronically in assigned options, while physically present on the Exchange floor.[5] On the other hand, an RSQT

[1] *See* Securities Exchange Act Release No. 68689 (January 18, 2013), 78 FR 5518.

[2] In Partial Amendment No. 1, the Exchange provided clarification for the deleted rule text in Exchange Rule 1014(b)(ii)(B), pertaining to the restriction of persons directly or indirectly affiliated with an RSQT from submitting quotations as a specialist, SQT, RSQT or non-SQT ROT in options in which such affiliated RSQT is assigned. The Exchange proposed to delete this restriction, which would allow affiliated persons with an RSQT to submit quotations in options in which the affiliated RSQT is assigned. The Exchange stated that the restriction was appropriate when the Exchange market was a traditional open outcry floor, but is no longer applicable in the current predominantly electronic trading environment. According to the Exchange, the following reasons support the removal of this restriction: (1) The prohibition was never applicable to SQTs but only to the off-floor RSQTs, and so removing the prohibition for RSQTs would treat the on and off-floor traders equally; (2) RSQTs are no longer an unknown quantity, but rather over the years have evolved into an integral and tested component of the current electronic trading system; (3) while there may have been a desire to prohibit affiliates of RSQTs from submitting competitive quotes at the beginning of the RSQT program when RSQT options assignments were instituted at the corporate level, that is no longer the case with options assignments being made at the individual RSQT level pursuant to this proposal; and (4) removal of the prohibition comports with the growth of competitive quoting to the benefit of investors. Because Amendment No. 1 is technical in nature, it is not subject to notice and comment.

[3] *See* Exchange Rule 1014(b).

[4] *See* Exchange Rule 1014(b)(ii).

[5] *See* Exchange Rule 1014(b)(ii)(A).

generates and submits option quotes electronically in assigned options while maintaining no physical presence on the Exchange floor.[6] An RSQT could be an Exchange member or member organization.

The Exchange proposes to add RSQTOs, which would consist of member organizations only, and reclassify RSQTs as Exchange members.[7] The Exchange would allow a maximum of three RSQTs at any time to be affiliated with an RSQTO.[8] Current Exchange member organizations operating as RSQTs would be deemed to be RSQTOs.[9] The converted RSQTOs would have 21 days to notify the Exchange of their affiliated RSQTs.[10]

Currently, the criteria that must be met in order to be eligible as a RSQT is the same as the criteria to be eligible as an SQT, with two exceptions; specifically, the RSQT must demonstrate the existence of order flow commitments, and the willingness to accept allocations as an RSQT in options overlying 400 or more securities. The Exchange proposes that all of the current RSQT application criteria (including the provisions described above) will become the application criteria for RSQTOs. In addition, all of the current SQT application criteria will apply equally to SQTs and RSQTs.

As proposed by the Exchange, an RSQTO must submit its application in writing in a form and format prescribed by the Exchange.[11] The application must include, at a minimum, the name of the application, the Exchange account number, and the name of each affiliated RSQT.[12] The Exchange proposes to amend the current SQT application process by including RSQTs and adding a requirement that they be affiliated with an RSQTO.[13]

The Exchange also proposes to amend the application and assignment in options for RSQTOs, RSQTs, and SQTs. The Exchange would require the name of the RSQTO with whom the RSQT is affiliated, and the member organization with whom the SQT is affiliated.[14]

Lastly, the Exchange would allow more than one RSQT to submit a quote in assigned options. Currently, Exchange Rule 1014(b)(ii)(B) prohibits a person who is directly or indirectly affiliated with an RSQT to submit quotes as a specialist, SQT, RSQT or non-SQT ROT in options in which the affiliated RSQT is assigned.

[6] *See* Exchange Rule 1014(b)(ii)(B).

[7] *See* proposed Exchange Rule 507(a).

[8] *See* proposed Exchange Rule 507(a).

[9] *See* proposed Exchange Rule 507(a).

[10] *See* proposed Exchange Rule 507(a).

[11] *See* proposed Exchange Rule 507(a).

[12] *See* proposed Exchange Rule 507(a).

[13] *See* proposed Exchange Rule 507(b)(i).

[14] *See* proposed Exchange Rule 507(b)(i).

III. Discussion and Commission Findings

After careful review, the Commission finds that the proposed rule change is consistent with the requirements of the Act and the rules and regulations thereunder applicable to national securities exchanges.[15] In particular, the Commission finds that the proposed rule change is consistent with Section 6(b)(5) of the Act,[16] which requires that the rules of an exchange be designed, among other things, to promote just and equitable principles of trade, to foster cooperation and coordination with persons engaged in regulating, clearing, settling, processing information with respect to, and facilitating transactions in securities, to prevent fraudulent and manipulative acts, to remove impediments to and to perfect the mechanism for a free and open market and a national market system, and, in general, to protect investors and the public interest.

The Commission believes that the proposal is consistent with the requirements of the Act. The proposal would reclassify RSQTs as Exchange members and create a new category of Exchange participants known as RSQTOs, which would be Exchange member organizations only. The Commission finds that this classification is consistent with the requirements of the Act and would foster cooperation and coordination with persons engaged in regulating, clearing, settling, processing information with respect to, and facilitating transactions in securities. The proposal would also convert current Exchange member organizations operating as RSQTs into the proposed RSQTOs, and allow an application process for future RSQTOs. The Commission believes that the proposal is consistent with the requirements of the Act and should promote just and equitable principles of trade. Finally, the Commission believes that the proposal to allow more than one RSQT to submit a quote in assigned options is consistent with the requirements of the Act. The Exchange represented that the proposal is in response to customers' requests and that the Exchange has adequate surveillance program in place to monitor the impact of this proposal.

[15] In approving the proposed rule change, the Commission has considered the proposed rule's impact on efficiency, competition and capital formation. *See* 15 U.S.C. 78c(f).

[16] 15 U.S.C. 78f(b)(5).

For the reasons stated above, the Commission believes that the proposal is consistent with the requirements of the Act and is designed to promote just and equitable principles of trade, to remove impediments to and to perfect the mechanism for a free and open market and a national market system, and, in general, to protect investors and the public interest.

IV. Conclusion

It is therefore ordered, pursuant to Section 19(b)(2) of the Act,[17] that the proposed rule change, as modified by Amendment No. 1 (SR–Phlx–2013–03), be, and it hereby is, approved.

For the Commission, by the Division of Trading and Markets, pursuant to delegated authority.[18]

Elizabeth M. Murphy,

Secretary.

[FR Doc. 2013–09681 Filed 4–23–13; 8:45 am]

BILLING CODE 8011–01–P

[17] 15 U.S.C. 78s(b)(2).

[18] 17 CFR 200.30–3(a)(12).

SECURITIES AND EXCHANGE COMMISSION

[Release No. 34–69402; File No. SR–NASDAQ–2013–032]

Self-Regulatory Organizations; The NASDAQ Stock Market LLC; Notice of Designation of a Longer Period for Commission Action on Proposed Rule Change To Require That Listed Companies Have an Internal Audit Function

April 18, 2013.

On February 20, 2013, The NASDAQ Stock Market LLC (''Nasdaq'') filed with the Securities and Exchange Commission (''Commission''), pursuant to Section 19(b)(1) of the Securities Exchange Act of 1934 (''Act'') [1] and Rule 19b–4 thereunder,[2] a proposed rule change to require that listed companies have an internal audit function. The proposed rule change was published for comment in the **Federal Register** on March 8, 2013.[3] The Commission received 38 comments on the proposal.[4]

[1] 15 U.S.C. 78s(b)(1).

[2] 17 CFR 240.19b–4.

[3] *See* Securities Exchange Act Release No. 69030 (March 4, 2013), 78 FR 15075.

[4] *See* letters to Elizabeth M. Murphy, Secretary, Commission from William F. Derbyshire, dated March 5, 2013; Rainer Lenz, Ph.D., dated March 9, 2013; Raymond A. Link, Chief Financial Officer, FEI Company, dated March 11, 2013; Ann Marie Kim, dated March 12, 2013; Jeff A. Killian, Chief Financial Officer, Cascade Microtech, Inc., dated March 14, 2013; Matthew Hogan, dated March 18, 2013; Ann Rhoads, Chief Financial Officer, Zogenix, dated March 18, 2013; Daniel P.

Continued

Section 19(b)(2) of the Act [5] provides that, within 45 days of the publication of notice of the filing of a proposed rule change, or within such longer period up to 90 days as the Commission may designate if it finds such longer period to be appropriate and publishes its reasons for so finding or as to which the self-regulatory organization consents, the Commission shall either approve the proposed rule change, disapprove the proposed rule change, or institute proceedings to determine whether the proposed rule change should be disapproved. The 45th day for this filing is April 22, 2013.

The Commission is extending the 45-day time period for Commission action on the proposed rule change. The Commission finds that it is appropriate to designate a longer period within which to take action on the proposed rule change so that it has sufficient time to consider the Exchange's proposal, as described above, and the comments received.

Accordingly, pursuant to Section 19(b)(2) of the Act,[6] the Commission designates June 6, 2013, as the date by which the Commission should either approve or disapprove or institute proceedings to determine whether to disapprove the proposed rule change (File No. SR–NASDAQ–2013–032).

For the Commission, by the Division of Trading and Markets, pursuant to delegated authority.[7]

Kevin M. O'Neill,

Deputy Secretary.

[FR Doc. 2013–09630 Filed 4–23–13; 8:45 a.m.]

BILLING CODE 8011–01–P

Penberthy, Chief Financial Officer, Rand Capital Corporation, dated March 19, 2013; Jeff Andreson, dated March 19, 2013; Gary R. Fairhead, dated March 19, 2013; Roger Hawley, Chief Executive Officer, Zogenix, dated March 20, 2013; Vernon A. LoForti, Vice President and Chief Financial Officer, InfoSonics Corporation, dated March 20, 2013; Howard K. Kaminsky, Chief Financial Officer, Sport Chalet, Inc., dated March 21, 2013; Stanley P. Wirtheim, Chief Financial Officer, Smartpros.Ltd., dated March 25, 2013; Simon J. Parker, Head of Business Assurance, Innospec Inc., dated March 26, 2013; John H. Lowry III, Chief Financial Officer; Perceptron, Inc., dated March 27, 2013; David L. Nunes, President and Chief Executive Officer, Pope Resources, dated March 27, 2013; Don Tracy, Chief Financial Officer, MGP Ingredients, Inc., dated March 27, 2013; Vickie Reed, Sr. Director and Controller, Zogenix, Inc., dated March 27, 2013; Jay Biskupski, Chief Financial Officer, Peregrine Semiconductor Corporation, dated March 27, 2013; Alan F. Eisenberg, Executive Vice President, Emerging Companies and Business Development, Biotechnology Industry Organization (BIO), dated March 28, 2013; Mary Kay Fenton, Senior Vice President and Chief Financial Officer, Achillion Pharmaceuticals, Inc., dated March 28, 2013; Robert D. Shallish, Jr., Executive Vice President—Finance and Chief Financial Officer, CONMED Corporation, dated March 28, 2013; Dorothy M. Donohue, Deputy General Counsel—Securities Regulation, Investment Company Institute, dated March 28, 2013; Richard F. Chambers, President and Chief Executive Officer, The Institute of Internal Auditors, dated March 28, 2013; Daniel C. Regis, Chairman, Cray Inc. Audit Committee, Cray, Inc., dated March 29, 2013; Kenneth Bertsch, President and Chief Executive Officer, Society of Corporate Secretaries & Governance Professionals, dated March 29, 2013; Paul R. Oldham, Chief Financial Officer and Vice President Finance Administration, Electro Scientific Industries, dated March 29, 2013; Joseph D. Hill, Chief Financial Officer, Metabolix, Inc., dated March 29, 2013; Grant Thornton LLP, dated March 29, 2013; Michael McConnell, Executive Vice President and Chief Financial Officer, Digimarc Corporation, dated March 29, 2013; Elizabeth L. Hougen, Chief Financial Officer, Isis Pharmaceuticals, Inc., dated March 29, 2013; Julia Reigel, Wilson Sonsini Goodrich & Rosati, dated March 29, 2013; Sharon Barbari, Executive Vice President Finance and Chief Financial Officer, Cytokinetics, Inc., dated March 29, 2013; Michael G. Zybala, General Counsel, The InterGroup Corporation, dated April 3, 2013; Ramy R. Taraboulsi, Chairman and Chief Executive Officer, SyncBASE Inc., dated April 6, 2013; Matthew C. Wolsfeld, Chief Financial Officer, NTIC, dated April 10, 2013; and Barbara Russell, Chief Financial Officer, TOR Minerals International Inc., dated April 17, 2013.

[5] 15 U.S.C. 78s(b)(2).

[6] 15 U.S.C. 78s(b)(2).

[7] 17 CFR 200.30–3(a)(31).

SECURITIES AND EXCHANGE COMMISSION

[Release No. 34–69391; File No. SR–NASDAQ–2013–064]

Self-Regulatory Organizations; the NASDAQ Stock Market LLC; Notice of Filing and Immediate Effectiveness of Proposed Rule Change Relating to Routing Fees

April 18, 2013.

Pursuant to Section 19(b)(1) of the Securities Exchange Act of 1934 (''Act''),[1] and Rule 19b–4 thereunder, [2] notice is hereby given that on April 9, 2013, The NASDAQ Stock Market LLC (''NASDAQ'' or ''Exchange'') filed with the Securities and Exchange Commission (''SEC'' or ''Commission'') the proposed rule change as described in Items I, II, and III, below, which Items have been prepared by NASDAQ. The Commission is publishing this notice to solicit comments on the proposed rule change from interested persons.

I. Self-Regulatory Organization's Statement of the Terms of Substance of the Proposed Rule Change

NASDAQ proposes to amend Chapter XV, entitled ''Options Pricing,'' at Section 2 governing pricing for NASDAQ members using the NASDAQ Options Market (''NOM''), NASDAQ's facility for executing and routing standardized equity and index options. Specifically, NOM proposes to amend its Routing Fees.

[1] 15 U.S.C. 78s(b)(1).

[2] 17 CFR 240.19b–4.

While these amendments are effective upon filing, the Exchange has designated the proposed amendments to be operative on May 1, 2013.

The text of the proposed rule change is available on the Exchange's Web site at *http://www.nasdaq.cchwallstreet.com*, at the principal office of the Exchange, and at the Commission's Public Reference Room.

II. Self-Regulatory Organization's Statement of the Purpose of, and Statutory Basis for, the Proposed Rule Change

In its filing with the Commission, the Exchange included statements concerning the purpose of and basis for the proposed rule change. The text of these statements may be examined at the places specified in Item IV below. The Exchange has prepared summaries, set forth in sections A, B, and C below, of the most significant aspects of such statements.

A. Self-Regulatory Organization's Statement of the Purpose of, and the Statutory Basis for, the Proposed Rule Change

1. Purpose

NASDAQ proposes to amend its Routing Fees at Chapter XV, Section 2(3) of the Exchange Rules in order to recoup costs that the Exchange incurs for routing and executing orders in equity options to various away markets.

Today, the Exchange assesses Non-Customers a flat rate of $0.95 per contract on all Non-Customer orders routed to any away market and the Exchange assesses Customer orders a fixed fee plus the actual transaction fee dependent on the away market. Specifically, the Exchange assesses Customer orders routed to NASDAQ OMX PHLX LLC (''PHLX'') a fixed fee of $0.05 per contract in addition to the actual transaction fee assessed by the away market. With respect to Customer orders that are routed to NASDAQ OMX BX, Inc. (''BX Options''), the Exchange does not assess a Routing Fee and does not pass rebates paid by the away market.[3] The Exchange does not assess a Routing Fee when routing orders to BX Options because that exchange pays a rebate. Instead of netting the customer rebate paid by BX Options against the

[3] BX Options pays a Customer Rebate to Remove Liquidity as follows: Customers are paid $0.12 per contract in IWM, SPY and QQQ, $0.32 per contract in All Other Penny Pilot Options and $0.70 per contract in Non-Penny Pilot Options. *See* BX Options Rules at Chapter XV, Section 2(1).

fixed fee,[4] the Exchange simply does not assess a fee. The Exchange assesses Customer orders routed to all other away markets, except PHLX and BX Options, a fixed fee of $0.11 per contract in addition to the actual transaction fee assessed by the away market, unless the away market pays a rebate, then the Routing Fee is $0.00.

The fixed fees are based on costs that are incurred by the Exchange when routing to an away market in addition to the away market's transaction fee. For example, the Exchange incurs a fee when it utilizes Nasdaq Options Services LLC (''NOS''), a member of the Exchange and the Exchange's exclusive order router,[5] to route orders in options listed and open for trading to destination markets. Each time NOS routes to away markets NOS incurs a clearing-related cost[6] and, in the case of certain exchanges, a transaction fee is also charged in certain symbols, which fees are passed through to the Exchange. The Exchange also incurs administrative and technical costs associated with operating NOS, membership fees at away markets, Options Regulatory Fees (''ORFs'') and technical costs associated with routing options. For Customer orders, the transaction fee assessed by the Exchange is based on the away market's actual transaction fee or rebate for a particular market participant at the time that the order was entered into the Exchange's trading system. This transaction fee is calculated on an order-by-order basis for Customer orders, since different away markets charge different amounts. In the event that there is no transaction fee or rebate assessed by the away market, the only fee assessed is the fixed Routing Fee.

The Exchange is proposing to amend the Routing Fees to all other options exchanges, except PHLX and BX Options, to increase the fixed fee from $0.11 to $0.15 per contract.[7] The Exchange currently does not recoup all of its costs to route to away markets other than PHLX and BX Options. As mentioned herein, the Exchange incurs costs when routing to away markets including away market transaction fees, ORFs, clearing fees, Section 31 related fees, connectivity and membership fees. The Exchange is not recouping its costs currently with the $0.11 per contract fixed fee and proposes to increase the fixed fee to $0.15 per contract.

2. Statutory Basis

NASDAQ believes that its proposal to amend its pricing is consistent with Section 6(b) of the Act[8] in general, and furthers the objectives of Section 6(b)(4) of the Act,[9] in particular, in that it is an equitable allocation of reasonable fees and other charges among its Participants.

The Exchange believes that amending the Customer Routing Fee to other away markets, other than NOM and BX Options, from a fixed fee of $0.11 to $0.15 per contract, in addition to the actual transaction fee, is reasonable because the proposed fixed fee for Customer orders is an approximation of the costs the Exchange will be charged for routing orders to away markets. For example, today, NYSE MKT LLC (''Amex'') does not assess a Customer transaction fee.[10] Today, the Exchange would therefore assess a Customer order that was routed to Amex an $0.11 per contract Routing Fee. The Exchange's effective per contract expenses to route to Amex which includes the ORF, OCC clearing charges, Section 31 related fees, connectivity and membership fees, are not covered by the $0.11 per contract and are slightly higher than the $0.15 per contract. As a general matter, the Exchange believes that the proposed fees will allow it to recoup and cover its costs of providing optional routing services for Customer orders because it better approximates the costs incurred by the Exchange for routing such orders. While, each destination market's transaction charge varies and there is a cost incurred by the Exchange when routing orders to away markets, including OCC clearing costs, administrative and technical costs associated with operating NOS, membership fees at away markets, ORFs and technical costs associated with routing options, the Exchange believes that the proposed Routing Fees will enable it to recover the costs it incurs to route Customer orders to away markets. Today, the Exchange is paying a higher average cost per contract fee to route Customer orders to away markets, other than PHLX and BX Options.

The Exchange believes that the proposed pricing for Customer Routing Fees to all other away markets, except PHLX and BX Options, is equitable and not unfairly discriminatory because the Exchange would assess the same fixed fee when routing orders to an away market in addition to the away market transaction fee. The proposal would apply uniformly to all market participants when routing to an away market that pays a rebate. Market participants may submit orders to the Exchange as ineligible for routing or ''DNR'' to avoid Routing Fees.[11] It is important to note that when orders are routed to an away market they are routed based on price first.[12]

Further, the Exchange believes that it is reasonable to continue to not assess a Customer Routing Fee when routing to all other options exchanges, except PHLX and BX Options, if the away market pays a rebate. The Exchange will continue to assess a fixed fee, which fee is being increased with this proposal, plus the actual transaction charge assessed by the away market when routing to all other options exchanges, except PHLX and BX Options, unless the away market pays a rebate. The Exchange would continue to not assess a Routing Fee if the away market pays a rebate because the Exchange believes it is reasonable to retain the rebate to offset the Routing Fee. The Exchange believes that market participants will have more certainty as to the Customer Routing Fee that will be assessed by the Exchange by simply not assessing a Routing Fee for Customer orders routed to away markets, other than PHLX, that pay a rebate.[13] The Exchange believes that not assessing a fee for routing orders to BX Options, instead of netting the customer rebate paid by BX Options against the Fixed Fee[14] is reasonable because although market participants routing orders to BX Options will not receive a credit, the Routing Fee is transparent. Market participants will not pay a Customer Routing Fee when routing orders to BX Options with this proposal instead of the $0.05 per contract fee netted against the rebate, as is the case today. The Exchange believes that the proposed Customer Routing Fee to BX Options is equitable and not unfairly discriminatory because the proposal would apply uniformly to all market participants.

The Exchange believes that it is reasonable, equitable and not unfairly

[4] BX Options does not assess a Customer a Fee to Remove Liquidity in any symbols today. *See* Chapter V, Section 2(1) of the BX Options Rules.

[5] *See* NASDAQ Rules at Chapter VI, Section 11(e) (Order Routing).

[6] The Options Clearing Corporation (''OCC'') assesses a clearing fee of $0.01 per contract side. *See* Securities Exchange Act Release No. 68025 (October 10, 2012), 77 FR 63398 (October 16, 2012) (SR–OCC–2012–18).

[7] The Exchange is not proposing to amend Non-Customer Routing Fees or Routing Fees for Customer orders routed to PHLX or BX Options.

[8] 15 U.S.C. 78f(b).

[9] 15 U.S.C. 78f(b)(4).

[10] *See* Amex's Fee Schedule.

[11] *See* NASDAQ Rules at Chapter VI, Section 11(e) (Order Routing).

[12] *Id.*

[13] BX Options pays a Customer Rebate to Remove Liquidity as follows: Customers are paid $0.12 per contract in IWM, SPY and QQQ, $0.32 per contract in All Other Penny Pilot Options and $0.70 per contract in Non-Penny Pilot Options. *See* BX Options Rules at Chapter XV, Section 2(1).

[14] BX Options does not assess a Customer a Fee to Remove Liquidity in any symbols today. *See* Chapter V, Section 2(1) of the BX Options Rules.

discriminatory to continue to assess Customer orders that are routed to PHLX a fixed fee of $0.05 per contract and orders that are routed to other away markets, other than PHLX and BX Options, a fixed fee of $0.15 per contract because the cost, in terms of actual cash outlays, to the Exchange to route to PHLX (and BX Options)[15] is lower. For example, costs related to routing to PHLX are materially lower as compared to other away markets because NOS is utilized by all three exchanges to route orders.[16] NOS and the three NASDAQ OMX options markets have a common data center and staff that are responsible for the day-to-day operations of NOS. Because the three exchanges are in a common data center, Routing Fees are reduced because costly expenses related to, for example, telecommunication lines to obtain connectivity are avoided when routing orders in this instance. The costs related to connectivity to route orders to other NASDAQ OMX exchanges are de minimis. When routing orders to non-NASDAQ OMX exchanges, the Exchange incurs costly connectivity charges related to telecommunication lines and other related costs. The Exchange believes it is reasonable, equitable and not unfairly discriminatory to pass along savings realized by leveraging NASDAQ OMX's infrastructure and scale to market participants when those orders are routed to NOM.

Finally, the Exchange believes that it is reasonable, equitable and not unfairly discriminatory to assess different fees for Customers orders as compared to non-Customer orders because the Exchange has traditionally assessed lower fees to Customers as compared to non-Customers. Customers will continue to receive the lowest fees or no fees when routing orders, as is the case today. Other options exchanges also assess lower Routing Fees for customer orders as compared to non-customer orders.[17]

B. Self-Regulatory Organization's Statement on Burden on Competition

NASDAQ does not believe that the proposed rule change will impose any burden on competition not necessary or appropriate in furtherance of the purposes of the Act. The Exchange does not believe that the proposal creates a burden on intra-market competition because the Exchange is applying the same Routing Fees and credits to all market participants in the same manner dependent on the routing venue, with the exception of Customers. The Exchange will continue to assess separate Customer Routing Fees. Customers will continue to receive the lowest fees or no fees when routing orders, as is the case today. Other options exchanges also assess lower Routing Fees for customer orders as compared to non-customer orders.[18]

The Exchange's proposal would allow the Exchange to continue to recoup its costs when routing orders to away markets when such orders are designated as available for routing by the market participant. The Exchange continues to pass along savings realized by leveraging NASDAQ OMX's infrastructure and scale to market participants when those orders are routed to NOM and is providing those savings to all market participants. Members and member organizations may choose to mark the order as ineligible for routing to avoid incurring these fees.[19] Today, other options exchanges also assess fixed routing fees to recoup costs incurred by the Exchange to route orders to away markets.[20]

The Exchange operates in a highly competitive market, comprised of eleven exchanges, in which market participants can easily and readily direct order flow to competing venues if they deem fee levels at a particular venue to be excessive. Accordingly, the fees that are assessed by the Exchange must remain competitive with fees charged by other venues and therefore must continue to be reasonable and equitably allocated to those members organizations that opt to direct orders to the Exchange rather than competing venues.

C. Self-Regulatory Organization's Statement on Comments on the Proposed Rule Change Received From Members, Participants, or Others

No written comments were either solicited or received.

III. Date of Effectiveness of the Proposed Rule Change and Timing for Commission Action

The foregoing rule change has become effective pursuant to Section 19(b)(3)(A)(ii) of the Act.[21] At any time within 60 days of the filing of the proposed rule change, the Commission summarily may temporarily suspend such rule change if it appears to the Commission that such action is necessary or appropriate in the public interest, for the protection of investors, or otherwise in furtherance of the purposes of the Act. If the Commission takes such action, the Commission shall institute proceedings to determine whether the proposed rule should be approved or disapproved.

IV. Solicitation of Comments

Interested persons are invited to submit written data, views, and arguments concerning the foregoing, including whether the proposed rule change is consistent with the Act. Comments may be submitted by any of the following methods:

Electronic Comments

- Use the Commission's Internet comment form (*http://www.sec.gov/rules/sro.shtml*); or
- Send an email to *rule-comments@sec.gov.* Please include File Number SR–NASDAQ–2013–064 on the subject line.

Paper Comments

- Send paper comments in triplicate to Elizabeth M. Murphy, Secretary, Securities and Exchange Commission, 100 F Street NE., Washington, DC 20549–1090.

All submissions should refer to File Number SR–NASDAQ–2013–064. This file number should be included on the subject line if email is used. To help the Commission process and review your comments more efficiently, please use only one method. The Commission will post all comments on the Commission's Internet Web site (*http://www.sec.gov/rules/sro.shtml*). Copies of the submission, all subsequent amendments, all written statements with respect to the proposed rule change that are filed with the Commission, and all written communications relating to the proposed rule change between the Commission and any person, other than those that may be withheld from the public in accordance with the provisions of 5 U.S.C. 552, will be available for Web site viewing and printing in the Commission's Public Reference Room, 100 F Street NE., Washington, DC 20549, on official business days between the hours of 10:00 a.m. and 3:00 p.m. Copies of such filing also will be available for

[15] The Exchange does not assess the $0.05 per contract Fixed Fee for routing orders to BX Options because that exchange pays Customer rebates, which the Exchange would retain to offset its cost.

[16] *See* Chapter VI, Section 11 of the NASDAQ and BX Options Rules and PHLX Rule 1080(m)(iii)(A).

[17] BATS assesses lower customer routing fees as compared to non-customer routing fees per the away market. For example BATS assesses ISE customer routing fees of $0.30 per contract and an ISE non-customer routing fee of $0.57 per contract. *See* BATS BZX Exchange Fee Schedule.

[18] *Id.*

[19] *See supra* note 11.

[20] *See* CBOE's Fees Schedule and ISE's Fee Schedule.

[21] 15 U.S.C. 78s(b)(3)(A)(ii).

inspection and copying at the principal office of the Exchange. All comments received will be posted without change; the Commission does not edit personal identifying information from submissions. You should submit only information that you wish to make available publicly. All submissions should refer to File Number SR–NASDAQ–2013–064, and should be submitted on or before May 15, 2013.

For the Commission, by the Division of Trading and Markets, pursuant to delegated authority.[22]

Kevin M. O'Neill,

Deputy Secretary.

[FR Doc. 2013–09624 Filed 4–23–13; 8:45 am]

BILLING CODE 8011–01–P

SECURITIES AND EXCHANGE COMMISSION

[Release No. 34–69400; File No. SR–C2–2013–016]

Self-Regulatory Organizations; C2 Options Exchange, Incorporated; Notice of Filing and Immediate Effectiveness of a Proposed Rule Change Relating to Fees for the BBO Data Feed for C2 Listed Options

April 18, 2013.

Pursuant to Section 19(b)(1) of the Securities Exchange Act of 1934 (the ''Act''),[1] and Rule 19b–4 thereunder,[2] notice is hereby given that on April 5, 2013, C2 Options Exchange, Incorporated (the ''Exchange'' or ''C2'') filed with the Securities and Exchange Commission (the ''Commission'') the proposed rule change as described in Items I, II, and III below, which Items have been prepared by the Exchange. The Commission is publishing this notice to solicit comments on the proposed rule change from interested persons.

I. Self-Regulatory Organization's Statement of the Terms of Substance of the Proposed Rule Change

C2 Options Exchange, Incorporated (the ''Exchange'' or ''C2'') proposes to amend the fee schedule of Market Data Express, LLC (''MDX''), an affiliate of C2, for the BBO Data Feed for C2 listed options (''C2 BBO Data Feed'' or ''Data''). The text of the proposed rule change is available on the Exchange's Web site (*http://www.c2exchange.com/Legal/*), at the Exchange's Office of the Secretary, and at the Commission's Public Reference Room.

II. Self-Regulatory Organization's Statement of the Purpose of, and Statutory Basis for, the Proposed Rule Change

In its filing with the Commission, the Exchange included statements concerning the purpose of and basis for the proposed rule change and discussed any comments it received on the proposed rule change. The text of these statements may be examined at the places specified in Item IV below. The Exchange has prepared summaries, set forth in sections A, B, and C below, of the most significant aspects of such statements.

A. Self-Regulatory Organization's Statement of the Purpose of, and Statutory Basis for, the Proposed Rule Change

1. Purpose

The purpose of the proposed rule change is to amend the fees charged by MDX for the C2 BBO Data Feed and to make several clarifying changes to the MDX fee schedule.[3] The C2 BBO Data Feed is a real-time, low latency data feed that includes C2 ''BBO data'' and last sale data.[4] The BBO and last sale data contained in the C2 BBO Data Feed is identical to the data that C2 sends to the Options Price Reporting Authority (''OPRA'') for redistribution to the public.[5]

The C2 BBO Data Feed also includes certain data that is not included in the data sent to OPRA, namely, (i) totals of customer versus non-customer contracts at the BBO, (ii) All-or-None contingency orders priced better than or equal to the BBO, (iii) BBO data and last sale data for complex strategies (e.g., spreads, straddles, buy-writes, etc.) (''Spread Data''), and (iv) expected opening price (''EOP'') and expected opening size (''EOS'') information that is disseminated prior to the opening of the market and during trading rotations (collectively, ''EOP/EOS data'').[6]

MDX currently charges Customers a ''direct connect fee'' of $1,000 per connection per month and a ''per user fee'' of $25 per month per ''Authorized User'' or ''Device'' for receipt of the C2 BBO Data Feed by Subscribers.[7] Either a C2 Permit Holder or a non-C2 Permit Holder may be a Customer. All Customers are assessed the same fees.

The Exchange proposes to eliminate both the direct connect fee and the per user fee and replace them with a ''data fee'', payable by a Customer, of $1,000 per month for internal use and external redistribution of the C2 BBO Data Feed. A ''Customer'' is any entity that receives the C2 BBO Data Feed directly from MDX's system or through a connection to MDX provided by an approved redistributor (i.e., a market data vendor or an extranet service provider) and then distributes it internally and/or externally. The data fee would entitle a Customer to provide the C2 BBO Data Feed to an unlimited number of internal users and Devices within the Customer. The data fee would also entitle a Customer to distribute externally the C2 BBO Data Feed to other Customers. A Customer receiving the C2 BBO Data Feed from another Customer would be assessed the data fee by MDX and would be entitled to distribute the data internally and/or externally.[8] All Customers would have the same rights to utilize the Data (i.e., distribute the Data internally and/or externally) as long as the Customer has entered into an agreement with MDX for the Data and pays the data fee. Either a C2 Permit Holder or a non-C2 Permit Holder may be a Customer.

The Exchange also proposes to make several clarifying changes to the MDX fee schedule. MDX charges Customers a monthly fee of $500 for each port connection to MDX to receive the C2

[22] 17 CFR 200.30–3(a)(12).

[1] 15 U.S.C. 78s(b)(1).

[2] 17 CFR 240.19b–4.

[3] The C2 BBO Data Feed and the fees charged by MDX for the C2 BBO Data Feed were established in March 2011. See Securities Exchange Act Release No. 63996 (March 1, 2011), 76 FR 12386 (March 7, 2011).

[4] The BBO Data Feed includes the ''best bid and offer,'' or ''BBO'', consisting of all outstanding quotes and standing orders at the best available price level on each side of the market, with aggregate size (''BBO data,'' sometimes referred to as ''top-of-book data''). Data with respect to executed trades is referred to as ''last sale'' data.

[5] The Exchange notes that MDX makes available to Customers the BBO data and last sale data that is included in the C2 BBO Data Feed no earlier than the time at which the Exchange sends that data to OPRA. A ''Customer'' is any entity that receives the C2 BBO Data Feed directly from MDX's system and then distributes it either internally or externally to Subscribers. A ''Subscriber'' is a person (other than an employee of a Customer) that receives the C2 BBO Data Feed from a Customer for its own internal use.

[6] The Exchange identified the inclusion of EOP/EOS data in the C2 BBO Data Feed in a proposed rule change filed in January 2013. *See* Securities Exchange Act Release No. 68697 (January 18, 2013), 78 FR 5523 (January 25, 2013).

[7] An ''Authorized User'' is defined as an individual user (an individual human being) who is uniquely identified (by user ID and confidential password or other unambiguous method reasonably acceptable to MDX) and authorized by a Customer to access the C2 BBO Data Feed supplied by the Customer. A ''Device'' is defined as any computer, workstation or other item of equipment, fixed or portable, that receives, accesses and/or displays data in visual, audible or other form.

[8] A Customer may choose to receive the Data from another Customer rather than directly from MDX's system because it does not want to or is not equipped to manage the technology necessary to establish a direct connection to MDX. In addition, a Customer is not subject to the MDX Port Fee if it does not establish a port connection to an MDX server.

BBO Data Feed (''Port Fee'').[9] The Exchange proposes to move the Port Fee into a new section of the MDX fee schedule called Systems Fees. The Exchange proposes to add a description of the Port Fee to the Definitions section of the MDX fee schedule. The Exchange proposes to clarify that MDX will not charge the data fee or the Port Fee for any calendar month in which a Customer commences receipt of Data after the 15th day of the month or discontinues receipt of the Data before the 15th day of the month. The Exchange also proposes to include in the MDX fee schedule provisions relating to invoicing and late payments. Lastly, the Exchange proposes to remove the definition of per user fee from the MDX fee schedule consistent with the elimination of that fee.

2. Statutory Basis

The Exchange believes that the proposed rule change is consistent with the requirements of Section 6(b) of the Securities Exchange Act of 1934 (''Act'')[10] in general, and, in particular, with Section 6(b)(4) of the Act [11] in that it provides for the equitable allocation of reasonable dues, fees and other charges among users and recipients of the Data, and with Section 6(b)(5) [12] of the Act in that it is not designed to permit unfair discrimination between them. The Exchange believes the proposed data fee is equitable and not unfairly discriminatory because it would apply equally to all Customers. All Customers would have the same rights to utilize the Data (i.e., distribute the Data internally and/or externally) as long as the Customer has entered into an agreement with MDX for the Data and pays the data fee.

The Exchange believes the proposed fee is reasonable because it compares favorably to fees that other markets charge for similar products. For example, the Exchange believes NASDAQ OMX PHLX charges Internal Distributors a monthly fee of $4,000 per organization and External Distributors a monthly fee of $5,000 per organization for its ''TOPO Plus Orders'' data feed, which like the C2 BBO Data Feed includes top-of-book data (including orders, quotes and trades) and other market data. The International Securities Exchange offers a ''Top Quote Feed'', which includes top-of-book data, and a separate ''Spread Feed'', which like the C2 BBO Data Feed includes order and quote data for complex strategies. The Exchange believes ISE charges distributors of its Top Quote Feed a base monthly fee of $3,000 and distributors of its Spread Feed a base monthly fee of $3,000. The Exchange notes that the C2 BBO Data Feed also competes with products offered by the NYSE entitled NYSE ArcaBook for Amex Options and NYSE ArcaBook for Arca Options that include top-of-book and last sale data similar to the data in the C2 BBO Data Feed. As noted above, the C2 BBO Data Feed also includes EOP/EOS data as well as other data.

For the reasons cited above, the Exchange believes the proposed fee for the C2 BBO Data Feed is equitable, reasonable and not unfairly discriminatory. In addition, the Exchange believes that no substantial countervailing basis exists to support a finding that the proposed terms and fee for the C2 BBO Data Feed fails to meet the requirements of the Act.

B. Self-Regulatory Organization's Statement on Burden on Competition

C2 does not believe that the proposed rule change will impose any burden on competition that is not necessary or appropriate in furtherance of the purposes of the Act. To the contrary, the market for options orders and executions is already highly competitive and the Exchange's proposal is itself pro-competitive as described below.

The Exchange believes competition provides an effective constraint on the market data fees that the Exchange, through MDX, has the ability and the incentive to charge. C2 has a compelling need to attract order flow from market participants in order to maintain its share of trading volume. This compelling need to attract order flow imposes significant pressure on C2 to act reasonably in setting its fees for market data, particularly given that the market participants that will pay such fees often will be the same market participants from whom C2 must attract order flow. These market participants include broker-dealers that control the handling of a large volume of customer and proprietary order flow. Given the portability of order flow from one exchange to another, any exchange that sought to charge unreasonably high data fees would risk alienating many of the same customers on whose orders it depends for competitive survival. C2 currently competes with ten options exchanges (including C2's affiliate, Chicago Board Options Exchange) for order flow.[13]

C2 is constrained in pricing the C2 BBO Data Feed by the availability to market participants of alternatives to purchasing the C2 BBO Data Feed. C2 must consider the extent to which market participants would choose one or more alternatives instead of purchasing the exchange's data. For example, the BBO data and last sale data available in the C2 BBO Data Feed is included in the OPRA data feed. The OPRA data is widely distributed and relatively inexpensive, thus constraining C2's ability to price the C2 BBO Data Feed. In this respect, the OPRA data feed, which includes the exchange's transaction information, is a significant alternative to the C2 BBO Data Feed product.

Further, other options exchanges can and have produced their own top-of-book products, and thus are sources of potential competition for MDX. As noted above, NASDAQ OMX PHLX, ISE and NYSE offer market data products that compete with the C2 BBO Data Feed. In addition, the Exchange believes other options exchanges may currently offer top-of-book market data products for a fee or for free.

The Exchange believes that the C2 BBO Data Feed offered by MDX will help attract new users and new order flow to the Exchange, thereby improving the Exchange's ability to compete in the market for options order flow and executions.

C. Self-Regulatory Organization's Statement on Comments on the Proposed Rule Change Received From Members, Participants, or Others

The Exchange neither solicited nor received comments on the proposed rule change.

III. Date of Effectiveness of the Proposed Rule Change and Timing for Commission Action

The foregoing rule change has become effective pursuant to Section 19(b)(3)(A)(ii) of the Act.[14] At any time within 60 days of the filing of the proposed rule change, the Commission summarily may temporarily suspend such rule change if it appears to the Commission that such action is necessary or appropriate in the public interest, for the protection of investors, or otherwise in furtherance of the purposes of the Act. If the Commission takes such action, the Commission shall institute proceedings to determine

[9] *See* Securities Exchange Act Release No. 66487 (February 28, 2012), 77 FR 13165 (March 5, 2012).

[10] 15 U.S.C. 78f(b).

[11] 15 U.S.C. 78f(b)(4).

[12] 15 U.S.C. 78f(b)(5).

[13] The Commission has previously made a finding that the options industry is subject to significant competitive forces. *See* e.g., Securities Exchange Act Release No. 59949 (May 20, 2009), 74 FR 25593 (May 28, 2009) (SR–ISE–2009–97) (order approving ISE's proposal to establish fees for a real-time depth of market data offering).

[14] 15 U.S.C. 78s(b)(3)(A)(ii).

whether the proposed rule should be approved or disapproved.

IV. Solicitation of Comments

Interested persons are invited to submit written data, views, and arguments concerning the foregoing, including whether the proposed rule change is consistent with the Act. Comments may be submitted by any of the following methods:

Electronic Comments

- Use the Commission's Internet comment form (*http://www.sec.gov/rules/sro.shtml*); or
- Send an email to *rule-comments@sec.gov*. Please include File Number SR–C2–2013–016 on the subject line.

Paper Comments

- Send paper comments in triplicate to Elizabeth M. Murphy, Secretary, Securities and Exchange Commission, 100 F Street, NE., Washington, DC 20549–1090.

All submissions should refer to File Number SR–C2–2013–016. This file number should be included on the subject line if email is used. To help the Commission process and review your comments more efficiently, please use only one method. The Commission will post all comments on the Commission's Internet Web site (*http://www.sec.gov/rules/sro.shtml*). Copies of the submission, all subsequent amendments, all written statements with respect to the proposed rule change that are filed with the Commission, and all written communications relating to the proposed rule change between the Commission and any person, other than those that may be withheld from the public in accordance with the provisions of 5 U.S.C. 552, will be available for Web site viewing and printing in the Commission's Public Reference Room, 100 F Street, NE., Washington, DC 20549, on official business days between the hours of 10:00 a.m. and 3:00 p.m. Copies of such filing also will be available for inspection and copying at the principal office of the Exchange. All comments received will be posted without change; the Commission does not edit personal identifying information from submissions. You should submit only information that you wish to make publicly available. All submissions should refer to File Number SR–C2–2013–016 and should be submitted on or before May 15, 2013.

For the Commission, by the Division of Trading and Markets, pursuant to delegated authority.[15]

Kevin M. O'Neill,

Deputy Secretary.

[FR Doc. 2013–09628 Filed 4–23–13; 8:45 am]

BILLING CODE 8011–01–P

[15] 17 CFR 200.30–3(a)(12).

DEPARTMENT OF STATE

[Public Notice 8289]

Call for Expert Reviewers to the U.S. Government Review of the 2013 Revised Supplementary Methods and Good Practice Guidance Arising From the Kyoto Protocol

SUMMARY: The *United States Global Change Research Program*, in cooperation with the *Department of State*, request expert review of the Second Order Draft of the *2013 Revised Supplementary Methods and Good Practice Guidance Arising from the Kyoto Protocol* (the *KP Supplement*).

The *United Nations Environment Programme (UNEP)* and the *World Meteorological Organization (WMO)* established the IPCC in 1988. In accordance with its mandate and as reaffirmed in various decisions by the Panel, the major activity of the IPCC is to prepare comprehensive and up-to-date assessments of policy-relevant scientific, technical, and socio-economic information for understanding the scientific basis of climate change, potential impacts, and options for mitigation and adaptation. Among the IPCC's products is a series of guidance documents for the preparation of national greenhouse gas inventories, which provide guidance to periodic submissions by Parties to the U.N. Framework Convention on Climate Change (UNFCCC). These reports are developed in accordance with procedures for preparation and review of IPCC documents, which can be found at the following Web sites:

http://www.ipcc.ch/organization/organization_review.shtml#.UEY0LqSe7x8

http://ipcc.ch/organization/organization_procedures.shtml

The UNFCCC Conference of the Parties serving as the meeting of the Parties to the Kyoto Protocol (CMP) at its seventh session (CMP7), held in December 2011 in Durban, South Africa, invited the IPCC to review and, if necessary, update supplementary methodologies for estimating anthropogenic greenhouse gas emissions by sources and removals by sinks resulting from land use, land-use change and forestry (LULUCF) activities under Article 3, paragraphs 3 and 4, of the Kyoto Protocol (KP), related to the annex to 2/CMP.7, on the basis of, inter alia, Chapter 4 of IPCC's 2003 Good Practice Guidance for Land Use, Land-Use Change and Forestry (GPG–LULUCF). At its 35th plenary session held in Geneva, Switzerland, in June 2012, the IPCC asked its Task Force on National Greenhouse Gas Inventories (TFI) to review and update its supplementary guidance on greenhouse gas emissions and removals from land use, land use change and forestry (LULUCF) for reporting under the Kyoto Protocol.

The need to review and update Chapter 4 of the GPG–LULUCF arises for two reasons. Firstly, the methodologies contained in Chapter 4 provide the link between IPCC's general greenhouse gas inventory guidance, and reporting requirements under the KP. CMP7 agreed rules for LULUCF for the second commitment period under the KP which differ in some respects significantly from the rules agreed for the first commitment period, implying the need to update. Secondly, since Chapter 4 was intended to be used with the latest IPCC LULUCF guidance updating is needed to take account of the decision of the CMP to use the 2006 IPCC Guidelines for the purposes of the second commitment period under the KP. The new rules referred to and agreed by CMP7 on LULUCF contain, amongst other things, new provisions on forest management, emissions and removals associated with natural disturbances in forests, harvested wood products, and wetland drainage and rewetting, which are not covered in the existing Chapter 4.

It is worth noting that the *KP Supplement* is specific to provisions of the Kyoto Protocol and the United States will, therefore, not be obligated to use these supplementary methods.

As part of the U.S. Government Review of the Second Order Draft of the *KP Supplement,* the U.S. Government is soliciting comments from experts in relevant fields of expertise (The Terms of Reference, Work Plan and Table of Contents for the TFI contribution can be viewed here: *http://www.ipcc-nggip.iges.or.jp/home/docs/1206_TermsOfReference.pdf*).

Beginning on 22 April 2013, experts may register and access the Second Order Draft of the report to contribute to the U.S. Government review at: *review.globalchange.gov*. To be considered for inclusion in the U.S. Government submission, comments must be received by 23 May 2013. The

United States Global Change Research Program will coordinate collection and compilation of U.S. expert comments to develop a consolidated U.S. Government submission, which will be provided to the IPCC by 2 June 2013. Instructions for review and submission of comments are available at: *review.globalchange.gov*.

Experts may choose to provide comments directly through the IPCC's Expert Review process, which occurs in parallel with the U.S. Government Review. More information on the IPCC's comment process can be found at *http://www.ipcc.ch/activities/activities.shtml* and *http://www.ipcc-nggip.iges.or.jp/forms/wetlandsreview_registration.html*. To avoid duplication, comments submitted for consideration as part of the U.S. Government Review should not also be sent to the IPCC Secretariat through the Expert Review process (and vice versa). Comments to the U.S. government review should be submitted using the web-based system at: *review.globalchange.gov*.

This certification will be published in the **Federal Register**.

Dated: April 17, 2013.

Trigg Talley,

Director, Office of Global Change, Department of State.

[FR Doc. 2013–09689 Filed 4–23–13; 8:45 am]

BILLING CODE 4710–09–P

DEPARTMENT OF STATE

[Public Notice 8290]

Culturally Significant Objects Imported for Exhibition Determinations: ''Frida Kahlo, Diego Rivera, and Masterpieces of Modern Mexico: The Jacques and Natasha Gelman Collection''

SUMMARY: Notice is hereby given of the following determinations: Pursuant to the authority vested in me by the Act of October 19, 1965 (79 Stat. 985; 22 U.S.C. 2459), Executive Order 12047 of March 27, 1978, the Foreign Affairs Reform and Restructuring Act of 1998 (112 Stat. 2681, *et seq.*; 22 U.S.C. 6501 note, *et seq.*), Delegation of Authority No. 234 of October 1, 1999, and Delegation of Authority No. 236–3 of August 28, 2000 (and, as appropriate, Delegation of Authority No. 257 of April 15, 2003), I hereby determine that the objects to be included in the exhibition ''Frida Kahlo, Diego Rivera, and Masterpieces of Modern Mexico: The Jacques and Natasha Gelman Collection,'' imported from abroad for temporary exhibition within the United States, are of cultural significance. The objects are imported pursuant to a loan agreement with the foreign owner or custodian. I also determine that the exhibition or display of the exhibit objects at the Nelson-Atkins Museum of Art, Kansas City, Missouri, from on or about June 1, 2013, until on or about August 18, 2013, and at possible additional exhibitions or venues yet to be determined, is in the national interest. I have ordered that Public Notice of these Determinations be published in the **Federal Register**.

FOR FURTHER INFORMATION CONTACT: For further information, including a list of the exhibit objects, contact Paul W. Manning, Attorney-Adviser, Office of the Legal Adviser, U.S. Department of State (telephone: 202–632–6469). The mailing address is U.S. Department of State, SA–5, L/PD, Fifth Floor (Suite 5H03), Washington, DC 20522–0505.

Dated: April 16, 2013.

J. Adam Ereli,

Principal Deputy Assistant Secretary, Bureau of Educational and Cultural Affairs, Department of State.

[FR Doc. 2013–09692 Filed 4–23–13; 8:45 am]

BILLING CODE 4710–05–P

DEPARTMENT OF TRANSPORTATION

Office of the Secretary

Applications for Certificates of Public Convenience and Necessity and Foreign Air Carrier Permits

Notice of Applications for Certificates of Public Convenience and Necessity and Foreign Air Carrier Permits Filed Under Subpart B (formerly Subpart Q) during the Week Ending April 13, 2013. The following Applications for Certificates of Public Convenience and Necessity and Foreign Air Carrier Permits were filed under Subpart B (formerly Subpart Q) of the Department of Transportation's Procedural Regulations (See 14 CFR 301.201 et seq.). The due date for Answers, Conforming Applications, or Motions to Modify Scope are set forth below for each application. Following the Answer period DOT may process the application by expedited procedures. Such procedures may consist of the adoption of a show-cause order, a tentative order, or in appropriate cases a final order without further proceedings.

Docket Number: DOT–OST–2013–0071.

Date Filed: April 10, 2013.

Due Date for Answers, Conforming Applications, or Motion to Modify Scope: May 1, 2013.

Description: Application of Hawaiian Airlines, Inc. requesting a certificate of public convenience and necessity and an exemption to provide scheduled combination service between the United States and China and that Hawaiian be designated to the Government of China to provide such service.

Docket Number: DOT–OST–2013–0073.

Date Filed: April 11, 2013.

Due Date for Answers, Conforming Applications, or Motion to Modify Scope: May 2, 2013.

Description: Application of Aeronexus Corporate (PTY) Ltd (''Aeronexus'') requesting a foreign air carrier permit to conduct charter foreign air transportation of persons, property and mail: (1) Between any point or points behind South Africa, via any point or points in South Africa, and via intermediate points to any point or points in the United States or beyond; (2) between any point or points in the United States and any point or points in South Africa; (3) other charters pursuant to the prior approval requirements; and (4) transportation authorized by any additional charter rights that may be made available to South African carriers in the future. Aeronexus also requests an exemption to the extent necessary to enable it to provide the service described above pending issuance of its foreign air carrier permit and such other relief as the Department may deem necessary or appropriate.

Barbara J. Hairston,

Acting Program Manager, Docket Operations, Federal Register Liaison.

[FR Doc. 2013–09683 Filed 4–23–13; 8:45 am]

BILLING CODE 4910–9X–P

DEPARTMENT OF TRANSPORTATION

Office of the Secretary

Application of National Air Cargo Group Inc d/b/a National Airlines for Foreign Scheduled Authority

AGENCY: Department of Transportation.

ACTION: Notice of Order to Show Cause (Order 2013–4–12), Docket SOT–OST–2012–0204, Docket SOT–OST–2012–0205.

SUMMARY: The Department of Transportation is directing all interested persons to show cause why it should not issue an order finding National Air Cargo Group, Inc., d/b/a National Airlines fit, willing, and able to provide foreign scheduled air transportation of persons, property and mail to certain countries.

DATES: Persons wishing to file objections should do so no later than April 18, 2013.

ADDRESSES: Objections and answers to objections should be filed in Dockets

DOT–OST–2012–204 and DOT–OST–2012–205 and addressed to U.S. Department of Transportation, Docket Operations, (M–30, Room W12–140), 1200 New Jersey Avenue SE., West Building Group Floor, Washington, DC 20590, and should be served upon the parties listed in Attachment A to the order.

FOR FURTHER INFORMATION CONTACT: Catherine J. O'Toole, Air Carrier Fitness Division (X–56, Room W86–469), U.S. Department of Transportation, 1200 New Jersey Avenues SE., Washington, DC 20590, (202) 366–9998.

Dated: April 15, 2013.

Susan L. Kurland,

Assistant Secretary for Aviation and International Affairs.

[FR Doc. 2013–09557 Filed 4–23–13; 8:45 am]

BILLING CODE M

DEPARTMENT OF TRANSPORTATION

Federal Aviation Administration

[Docket No FAA–2013–0316]

Aviation Rulemaking Advisory Committee (ARAC) Airman Testing Standards and Training Working Group (ATSTWG)

AGENCY: Federal Aviation Administration (FAA), DOT.

ACTION: Notice of availability; request for comments

SUMMARY: This notice announces the availability of draft Airman Certification Standards (ACS) documents developed by the ATSTWG for the private pilot certificate and the instrument rating. These documents are available for public review, download, and comment.

DATES: Send comments on or before May 24, 2013.

ADDRESSES: Send comments identified by docket number FAA–2013–0316 using any of the following methods:

- *Federal eRulemaking Portal:* Go to *http://www.regulations.gov* and follow the online instructions for sending your comments electronically.
- *Mail:* Send comments to Docket Operations, M–30; U.S. Department of Transportation (DOT), 1200 New Jersey Avenue SE., Room W12–140, West Building Ground Floor, Washington, DC 20590–0001.
- *Hand Delivery or Courier:* Take comments to Docket Operations in Room W12–140 of the West Building Ground Floor at 1200 New Jersey Avenue SE., Washington, DC, between 9 a.m. and 5 p.m., Monday through Friday, except Federal holidays.
- *Fax:* Fax comments to Docket Operations at (202) 493–2251.

Privacy: The FAA will post all comments it receives, without change, to *http://www.regulations.gov,* including any personal information the commenter provides. Using the search function of the docket Web site, anyone can find and read the electronic form of all comments received into any FAA dockets, including the name of the individual sending the comment (or signing the comment for an association, business, labor union, etc.). DOT's complete Privacy Act Statement can be found in the **Federal Register** published on April 11, 2000 (65 FR 19477–19478), as well as at *http://DocketsInfo.dot.gov.*

Docket: Background documents or comments received may be read at *http://www.regulations.gov* at any time. Follow the online instructions for accessing the docket or go to the Docket Operations in Room W12–140 of the West Building Ground Floor at 1200 New Jersey Avenue SE., Washington, DC, between 9 a.m. and 5 p.m., Monday through Friday, except Federal holidays.

FOR FURTHER INFORMATION CONTACT: Van L. Kerns, Manager, Regulatory Support Division, FAA Flight Standards Service, AFS 600, FAA Mike Monroney Aeronautical Center P.O. Box 25082 Oklahoma City, OK 73125; telephone (405) 954–4431, email van.l.kerns@faa.gov.

SUPPLEMENTARY INFORMATION:

Background

The FAA has established Docket No. FAA–2013–0316 for the purpose of enabling the public to comment on several draft documents developed by the Airman Testing Standards and Training Working Group. The following documents have been placed in that docket for public review and comment:

(1) Background Information; Industry-Led Changes to FAA Airman Testing Standards and Training

(2) Draft PRIVATE PILOT—AIRPLANE Airman Certification Standards;

(3) Draft Change Tracking Matrix referenced to FAA–S–8081–14B, Private Pilot Practical Test Standards for Airplane (Single Engine Land and Single-Engine Sea Areas of Operation); Section 1: Private Pilot

(4) Draft INSTRUMENT RATING—Airman Certification Standards; and

(5) Draft Change Tracking Matrix referenced to FAA–S–8081–4E, Instrument Rating Practical Test Standards for Airplane, Helicopter, and Powered Lift

On August 30, 2012, the ARAC Executive Committee accepted the FAA's assignment of a new task arising from recommendations of the Airman Testing Standards and Training Aviation Rulemaking Committee (ARC). The ARC recommended ways to ensure that the FAA's airman testing and training materials better support reduction of fatal general aviation accidents. The new task instructed the ARAC to integrate aeronautical knowledge and flight proficiency requirements for the private pilot and flight instructor certificates and the instrument rating into a single ACS document for each type of certificate and rating; to develop a detailed proposal to realign FAA training handbooks with the ACS documents; and to propose knowledge test item bank questions consistent with the integrated ACS documents and the principles set forth in the ARC's recommendations.

The FAA announced the ARAC's acceptance of this task through a **Federal Register** Notice published on September 12, 2012 [77 FR 56251]. This Notice described the task elements and solicited participants for the ATSTWG, which subsequently formed and began its work in November 2012.

Consistent with the initial part of this tasking, the ATSTWG has developed draft ACS documents for the private pilot certificate and the instrument rating. These documents align the aeronautical knowledge testing standards with the flight proficiency standards set out in the existing Practical Test Standards (PTS). In addition to supporting the FAA's effort to improve the relevance, reliability, validity, and effectiveness of aeronautical testing and training materials, the draft ACS documents support the FAA's goal of reducing fatal general aviation accidents by incorporating task-specific risk management considerations into each Area of Operation.

The ATSTWG continues the necessary work to develop the authorized instructor ACS document and complete its remaining assignments. These include developing a detailed proposal to realign and, as appropriate, streamline and consolidate existing FAA guidance material (e.g., handbooks) with each integrated ACS document; and to propose methodologies to ensure that knowledge test item bank questions are consistent with both the ACS documents and the test question development principles set forth in the ARC's recommendations.

The ACS documents are designed as the foundation for transitioning to a more integrated and systematic approach to airman certification testing

and training. To accomplish this objective and achieve its overall safety goals, the ACS documents support the safety management system (SMS) framework. SMS methodology provides a systematic approach to achieving acceptable levels of safety risk. The ATSTWG is constructing ACS, associated guidance, and test item bank question components of the airman certification system around the four functional components of SMS:

- *Safety Policy* that demonstrates FAA senior management commitment to continually improve safety through enhancements to the airman certification testing and training system; specifically, better integration of the aeronautical knowledge, flight proficiency, and risk management components of the airman certification system;
- *Safety Risk Management* processes that create a structured means of safety risk management decision making to identify, assess, and determine acceptable level of risk associated with regulatory changes, safety recommendations, or other factors requiring modification of airman testing and training materials;
- *Safety Assurance* processes which allow increased confidence on the part of industry and FAA stakeholders in risk controls through a continual review of FAA products and the systematic, prompt and appropriate incorporation of changes arising from new regulations, data analysis, and safety recommendations; and
- *Safety Promotion* framework to support a positive safety culture in the form of training and ongoing engagement with both external stakeholders (e.g., the aviation training industry) and FAA policy divisions.

Given the foundational nature of the ACS documents and their importance in the ongoing evolution of the FAA's airman certification testing and training system, the ATSTWG wishes to make draft ACS documents for the private pilot certificate and the instrument rating available to the public for review and comment. The ATSTWG will use the comments it receives to refine and inform its continuing work on this project. Future drafts developed by the ATSTWG may also be published for this purpose.

Issued in Washington, DC on April 19, 2013.

Brenda D. Courtney,

Alternate Designated Federal Officer, Aviation Rulemaking Advisory Committee.

[FR Doc. 2013–09684 Filed 4–23–13; 8:45 am]

BILLING CODE 4910–13–P

DEPARTMENT OF TRANSPORTATION

Federal Aviation Administration

Furlough Implementation

AGENCY: Federal Aviation Administration (FAA), DOT.

ACTION: Notice.

SUMMARY: This action gives notice to the American public and aviation industry of the FAA's Aviation Safety Office's (AVS) furlough implementation. Under the Balanced Budget and Emergency Deficit Control Act of 1985, as amended by the Budget Control Act of 2011 and the American Taxpayer Relief Act of 2012, across-the-board budget cuts require the FAA to implement furloughs. AVS and its Services/Offices will implement the required 11 days of furlough beginning April 21, 2013 and continuing through September 30, 2013. AVS will continue to focus resources on those initiatives that would have the highest safety and economic value for the American public and aviation industry. The furlough days vary, with each office scheduling those days in accordance with mission requirements, workload considerations, and applicable collective bargaining agreements. For specific information, please see the FAA Web site at *http://www.faa.gov/about/office_org/headquarters_offices/avs/operations_sequestration*.

DATES: The furlough will take place beginning April 21 through September 30, 2013.

SUPPLEMENTARY INFORMATION: For specific information, please see the FAA Web site at *http://www.faa.gov/about/office_org/headquarters_offices/avs/operations_sequestration*.

Issued in Washington, DC, on April 22, 2013.

Lirio Liu,

Director, Office of Rulemaking.

[FR Doc. 2013–09775 Filed 4–22–13; 11:15 am]

BILLING CODE 4910–13–P

DEPARTMENT OF TRANSPORTATION

Federal Aviation Administration

[Summary Notice No. PE–2013–17]

Petition for Exemption; Summary of Petition Received

AGENCY: Federal Aviation Administration (FAA), DOT.

ACTION: Notice of petition for exemption received.

SUMMARY: This notice contains a summary of a petition seeking relief from specified requirements of 14 CFR. The purpose of this notice is to improve the public's awareness of, and participation in, this aspect of FAA's regulatory activities. Neither publication of this notice nor the inclusion or omission of information in the summary is intended to affect the legal status of the petition or its final disposition.

DATES: Comments on this petition must identify the petition docket number and must be received on or before May 14, 2013.

ADDRESSES: You may send comments identified by Docket Number FAA–2013–0156 using any of the following methods:

- *Government-wide rulemaking Web site:* Go to *http://www.regulations.gov* and follow the instructions for sending your comments electronically.
- *Mail:* Send comments to the Docket Management Facility; U.S. Department of Transportation, 1200 New Jersey Avenue SE., West Building Ground Floor, Room W12–140, Washington, DC 20590.
- *Fax:* Fax comments to the Docket Management Facility at 202–493–2251.
- *Hand Delivery:* Bring comments to the Docket Management Facility in Room W12–140 of the West Building Ground Floor at 1200 New Jersey Avenue SE., Washington, DC, between 9 a.m. and 5 p.m., Monday through Friday, except Federal holidays.

Privacy: We will post all comments we receive, without change, to *http://www.regulations.gov*, including any personal information you provide. Using the search function of our docket Web site, anyone can find and read the comments received into any of our dockets, including the name of the individual sending the comment (or signing the comment for an association, business, labor union, etc.). You may review DOT's complete Privacy Act Statement in the **Federal Register** published on April 11, 2000 (65 FR 19477–78).

Docket: To read background documents or comments received, go to *http://www.regulations.gov* at any time or to the Docket Management Facility in Room W12–140 of the West Building Ground Floor at 1200 New Jersey Avenue SE., Washington, DC, between 9 a.m. and 5 p.m., Monday through Friday, except Federal holidays.

FOR FURTHER INFORMATION CONTACT: Mr. Mark B. James, Aerospace Engineer, Standards Office (ACE–111), Small Airplane Directorate, Aircraft Certification Service, FAA; telephone number (816) 329–4137, fax number (816) 329–4090, email at *mark.james@faa.gov.* Andrea Copeland, ARM–208, Office of Rulemaking, FAA,

800 Independence Avenue SW; Washington, DC 20591; email *andrea.copeland@faa.gov*; (202) 267–8081.

This notice is published pursuant to 14 CFR 11.85.

Issued in Washington, DC, on April 18, 2013.

Brenda D. Courtney,

Acting Director, Office of Rulemaking.

Petition for Exemption

Docket No.: FAA–2013–0156

Petitioner: Wipaire, Inc

Section of 14 CFR Affected: §§ 23.3(a) and 135.113

Description of Relief Sought: Wipaire is petitioning to increase the maximum number of passenger seats to ten, less pilot seats, on the Wipaire modified Cessna Caravan, Model C–208, and Cessna Grand Caravan, Model C–208B. Increasing the number of passenger seats to ten would still be within the Type Certification maximum seat number of eleven, including crew.

[FR Doc. 2013–09663 Filed 4–23–13; 8:45 am]

BILLING CODE 4910–13–P

DEPARTMENT OF TRANSPORTATION

Federal Aviation Administration

[Summary Notice No. PE–2013–13]

Petition for Exemption; Summary of Petition Received

AGENCY: Federal Aviation Administration (FAA), DOT.

ACTION: Notice of petition for exemption received.

SUMMARY: This notice contains a summary of a petition seeking relief from specified requirements of 14 CFR. The purpose of this notice is to improve the public's awareness of, and participation in, this aspect of FAA's regulatory activities. Neither publication of this notice nor the inclusion or omission of information in the summary is intended to affect the legal status of the petition or its final disposition.

DATES: Comments on this petition must identify the petition docket number involved and must be received on or before May 14, 2013.

ADDRESSES: You may send comments identified by Docket Number FAA–2013–0127 using any of the following methods:

- *Government-wide rulemaking Web site:* Go to *http://www.regulations.gov* and follow the instructions for sending your comments electronically.
- *Mail:* Send comments to the Docket Management Facility; U.S. Department of Transportation, 1200 New Jersey Avenue SE., West Building Ground Floor, Room W12–140, Washington, DC 20590.
- *Fax:* Fax comments to the Docket Management Facility at 202–493–2251.
- *Hand Delivery:* Bring comments to the Docket Management Facility in Room W12–140 of the West Building Ground Floor at 1200 New Jersey Avenue SE., Washington, DC, between 9 a.m. and 5 p.m., Monday through Friday, except Federal holidays.

Privacy: We will post all comments we receive, without change, to *http://www.regulations.gov*, including any personal information you provide. Using the search function of our docket Web site, anyone can find and read the comments received into any of our dockets, including the name of the individual sending the comment (or signing the comment for an association, business, labor union, etc.). You may review DOT's complete Privacy Act Statement in the **Federal Register** published on April 11, 2000 (65 FR 19477–78).

Docket: To read background documents or comments received, go to *http://www.regulations.gov* at any time or to the Docket Management Facility in Room W12–140 of the West Building Ground Floor at 1200 New Jersey Avenue SE., Washington, DC, between 9 a.m. and 5 p.m., Monday through Friday, except Federal holidays.

FOR FURTHER INFORMATION CONTACT: Tyneka Thomas ARM–105, (202) 267–7626, FAA, Office of Rulemaking, 800 Independence Ave SW., Washington, DC 20591. This notice is published pursuant to 14 CFR 11.85.

Issued in Washington, DC, on April 19, 2013.

Brenda D. Courtney,

Acting Director, Office of Rulemaking.

Petition for Exemption

Docket No.: FAA–2013–0127.

Petitioner: RPFlightSystems, Inc.

Sections of 14 CFR Affected: §§ 21.191 and 91.319.

Description of Relief Sought: RPFlight Systems, Inc. is requesting relief from §§ 21.191 and 91.319. The proposed exemption would allow them to operate a remote controlled unmanned aircraft for compensation and for hire without a special airworthiness certificate being issued by the FAA.

[FR Doc. 2013–09647 Filed 4–23–13; 8:45 am]

BILLING CODE 4910–13–P

DEPARTMENT OF TRANSPORTATION

Federal Aviation Administration

[Summary Notice No. PE–2013–09]

Petition for Exemption; Summary of Petition Received

AGENCY: Federal Aviation Administration (FAA), DOT.

ACTION: Notice of petition for exemption received.

SUMMARY: This notice contains a summary of a petition seeking relief from specified requirements of 14 CFR. The purpose of this notice is to improve the public's awareness of, and participation in, this aspect of FAA's regulatory activities. Neither publication of this notice nor the inclusion or omission of information in the summary is intended to affect the legal status of the petition or its final disposition.

DATES: Comments on this petition must identify the petition docket number involved and must be received on or before May 14, 2013.

ADDRESSES: You may send comments identified by Docket Number FAA–2013–0167 using any of the following methods:

- *Government-wide rulemaking Web site:* Go to *http://www.regulations.gov* and follow the instructions for sending your comments electronically.
- *Mail:* Send comments to the Docket Management Facility; U.S. Department of Transportation, 1200 New Jersey Avenue SE., West Building Ground Floor, Room W12–140, Washington, DC 20590.
- *Fax:* Fax comments to the Docket Management Facility at 202–493–2251.
- *Hand Delivery:* Bring comments to the Docket Management Facility in Room W12–140 of the West Building Ground Floor at 1200 New Jersey Avenue SE., Washington, DC, between 9 a.m. and 5 p.m., Monday through Friday, except Federal holidays.

Privacy: We will post all comments we receive, without change, to *http://www.regulations.gov,* including any personal information you provide. Using the search function of our docket Web site, anyone can find and read the comments received into any of our dockets, including the name of the individual sending the comment (or signing the comment for an association, business, labor union, etc.). You may review DOT's complete Privacy Act Statement in the **Federal Register** published on April 11, 2000 (65 FR 19477–78).

Docket: To read background documents or comments received, go to

http://www.regulations.gov at any time or to the Docket Management Facility in Room W12–140 of the West Building Ground Floor at 1200 New Jersey Avenue SE., Washington, DC, between 9 a.m. and 5 p.m., Monday through Friday, except Federal holidays.

FOR FURTHER INFORMATION CONTACT: Katherine Haley ARM–203, (202) 493–5708, FAA, Office of Rulemaking, 800 Independence Ave SW., Washington, DC 20591. This notice is published pursuant to 14 CFR 11.85.

Issued in Washington, DC, on April 19, 2013.

Brenda D. Courtney,

Acting Director, Office of Rulemaking.

Petition for Exemption

Docket No.: FAA–2013–0167.

Petitioner: Alameda County Sheriff's Air Squadron.

Sections of 14 CFR Affected: § 61.113(c).

Description of Relief Sought: Alameda County Sheriff's Air Squadron petitioned for an exemption from § 61.113(c) to allow the petitioner to reimburse its volunteer pilots for expenses related to operating certain flights sanctioned by the Alameda County Sheriff's Office.

[FR Doc. 2013–09646 Filed 4–23–13; 8:45 am]

BILLING CODE 4910–13–P

DEPARTMENT OF TRANSPORTATION

Federal Highway Administration

Notice of Final Federal Agency Actions on Proposed Highway in California

AGENCY: Federal Highway Administration (FHWA), DOT.

ACTION: Notice of Limitation on Claims for Judicial Review of Actions by the California Department of Transportation (Caltrans), pursuant to 23 U.S.C. 327, and U.S. Army Corps of Engineers (USACE), U.S. Fish and Wildlife, U.S.D.A. Forest Service, U.S. National Park Service, U.S. National Oceanic Atmospheric Administration National Marine Fisheries.

SUMMARY: The FHWA, on behalf of Caltrans, is issuing this notice to announce actions taken by Caltrans, and other Federal Agencies: US Army Corps of Engineers (USACE), US Fish and Wildlife, USDA Six Rivers National Forest: Smith River National Recreation Area, US National Park Service, NOAA National Marine Fisheries, that are final within the meaning of 23 U.S.C. 139(*l*)(1). The actions relate to a proposed highway project, the 197/199 Safe STAA Access Project which involves curve realignment and widening at seven locations on SR 197 p.m. 3.2–4.5, and US 199 20.5–26.5, and the replacement of a bridge on US 199 p.m. 24.08 in the County of Del Norte, State of California. Those actions grant licenses, permits, and approvals for the project.

DATES: By this notice, the FHWA, on behalf of Caltrans, is advising the public of final agency actions subject to 23 U.S.C. 139(*l*) (1). A claim seeking judicial review of the Federal agency actions on the highway project will be barred unless the claim is filed on or before September 23, 2013. If the Federal law that authorizes judicial review of a claim provides a time period of less than 150 days for filing such claim, then that shorter time period still applies.

FOR FURTHER INFORMATION CONTACT:

Sandra Rosas, Senior Environmental Planner, California Department of Transportation, 1656 Union Street, Eureka, CA 95501, (707) 441–5730, *Sandra_rosas@dot.ca.gov.*

Carol Heidsiek, U.S. Army Corps of Engineers (USACE), 601 Startare Dr. Box 14, Eureka, CA 95501, (707) 443–0855, *carol.a.heidsiek@spd02.usace.army.mil.*

Greg Schmidt, U.S. Fish and Wildlife Service, 1655 Heindon Road, Arcata, California 95521, (707) 822–7201, *Gregory_Schmidt@fws.gov.*

George Frey, U.S.D.A. Six Rivers National Forest: Smith River National Recreation Area, 1330 Bayshore Way, Eureka, CA 95501, (707) 441–3631, *gfrey@fs.fed.us.*

Stephen Bowes, U.S. National Park Service, CA Wild and Scenic Rivers Coordinator, National Park Service, 1111 Jackson Street, Suite 700, Oakland, CA 94607, (510) 817–1451, *stephen_bowes@nps.gov.*

Chuck Glasgow, N.O.A.A. National Marine Fisheries Service, 1655 Heindon Road, Arcata, California 95521, (707) 825–5170, *Chuck.Glasgow@NOAA.gov.*

SUPPLEMENTARY INFORMATION: Effective July 1, 2007, the Federal Highway Administration (FHWA) assigned, and the California Department of Transportation (Caltrans) assumed environmental responsibilities for this project pursuant to 23 U.S.C. 327. Notice is hereby given that the Caltrans, and U.S.D.A. Forest Service, U.S. National Park Service, U.S. Fish and Wildlife Service, U.S. N.O.A.A. National Marine Fisheries Service, and U.S. Army Corp of Engineers have taken final agency actions subject to 23 U.S.C. 139(*l*)(1) by issuing licenses, permits, and approvals for the following highway project in the State of California: The proposed project is located in Del Norte County on SR 197 and US 199, east of US 101. The primary purpose of the proposed project is to improve spot locations on SR 197 and US 199 in Del Norte County to allow reclassification of the SR 197–US 199 corridor as part of the STAA network of truck routes. The project involves realigning curves, widening and replacement of a bridge. The actions by the Federal agencies, and the laws under which such actions were taken, are described in the Final Environmental Assessment (EA) for the project, approved on April 10, 2013, in the FHWA Finding of No Significant Impact (FONSI) issued on April 10, 2013, and in other documents in the FHWA project records. The EA, FONSI, and other project records are available by contacting Caltrans at the addresses provided above. The Caltrans EA and FONSI can be viewed and downloaded from the project Web site at *http://www.dot.ca.gov/dist1/d1projects/197–199_staa/*

The U.S. Army Corp of Engineers decision and Nation Wide Permit are available by contacting the U.S. Army Corp of Engineers at the address provided above.

The U.S. Fish and Wildlife Service consultation and Biological Opinion are available by contacting the U.S. Fish and Wildlife Service at the address provided above.

The U.S. N.O.A.A National Marine Fisheries consultation and Letter of Concurrence are available by contacting U.S. N.O.A.A National Marine Fisheries at the address provided above.

The Forest Service 4(f) and National Scenic Rivers consultations are available by contacting the Forest Service at the address provided above.

The U.S National Park Service National Scenic River consultation is available by contacting the National Park Service at the address provided above.

This notice applies to all Federal agency decisions as of the issuance date of this notice and all laws under which such actions were taken, including but not limited to:

1. General: National Environmental Policy Act (NEPA) [42 U.S.C. 4321–4351]; Federal Aid Highway Act; [23 U.S. C109].

2. Air: Clean Air Act 42 U.S.C. 7401–7671(q).

3. Migratory Bird Treaty Act [16 U.S.C. 703–712].

4. Historic and Cultural Resources: Section 106 of the National Historic Preservation Act of 1966, as amended [16 U.S.C. 470(aa)–11].

5. Social and Economic: Civil Rights Act of 1964 [42 U.S.C. 2000(d)–2000(d)(1)]; The Uniform Relocation Assistance Act and Real Property Acquisition Policies Act of 1970, as amended.

6. Hazardous Materials: Comprehensive Environmental response, Compensation, and Liability Act (CERCLA), 42 U.S.C. 9601–9675; Superfund Amendments and Reauthorization Act of 1986 (SARA).

7. Executive Orders: E.O. 11990 Protection of Wetlands; E.O. 11988 Floodplain Management; E.O. 12898 Federal Actions to Address Environmental Justice in Minority Populations and Low Income Populations; E.O. 11593 Protection and Enhancement of Cultural Resources; E.O. 13112 Invasive Species.

8. Wild and Scenic Rivers 16 U.S.C. 1271–1287.

9. Endangered Species Act 16 U.S.C. 1531–1543.

10. Clean Water Act 33 U.S.C. 1251–1376.

(Catalog of Federal Domestic Assistance Program Number 20.205, Highway Planning and Construction. The regulations implementing Executive Order 12372 regarding intergovernmental consultation on Federal programs and activities apply to this program.)

Authority: 23 U.S.C. 139(*l*) (1).

Issued on: April 17, 2013.

Steve Pyburn,

North Team Leader, State Programs, Federal Highway Administration, Sacramento, California.

[FR Doc. 2013–09659 Filed 4–23–13; 8:45 am]

BILLING CODE 4910–RY–P

DEPARTMENT OF TRANSPORTATION

Federal Motor Carrier Safety Administration

[Docket No FMCSA–2011–0097]

Pilot Program on NAFTA Trucking Provisions

AGENCY: Federal Motor Carrier Safety Administration (FMCSA).

ACTION: Notice; request for public comment.

SUMMARY: FMCSA announces and requests public comment on data and information concerning the Pre-Authorization Safety Audit (PASA) for RAM Trucking SA de CV (RAM) with U.S. Department of Transportation (USDOT) number 2063285, which applied to participate in the Agency's long-haul pilot program to test and demonstrate the ability of Mexico-domiciled motor carriers to operate safely in the United States beyond the municipalities in the United States on the United States-Mexico international border or the commercial zones of such municipalities. This action is required by the ''U.S. Troop Readiness, Veterans' Care, Katrina Recovery, and Iraq Accountability Appropriations Act, 2007'' and all subsequent appropriations.

DATES: Comments must be received on or before May 6, 2013.

ADDRESSES: You may submit comments identified by Federal Docket Management System Number FMCSA–2011–0097 by any one of the following methods:

- *Federal eRulemaking Portal:* Go to *http://www.regulations.gov.* Follow the online instructions for submitting comments.
- *Fax:* 1–202–493–2251.
- *Mail:* Docket Management Facility, (M–30), U.S. Department of Transportation (DOT), 1200 New Jersey Avenue SE., West Building, Ground Floor, Room 12–140, Washington, DC 20590–0001.
- *Hand Delivery:* Same as mail address above, between 9 a.m. and 5 p.m., ET, Monday through Friday, except Federal holidays. The telephone number is 202–366–9329.

To avoid duplication, please use only one of these four methods. All submissions must include the Agency name and docket number for this notice. See the ''Public Participation'' heading below for instructions on submitting comments and additional information.

Note that all comments received, including any personal information provided, will be posted without change to *http://www.regulations.gov.* Please see the ''Privacy Act'' heading below.

Docket: For access to the docket to read background documents or comments received, go to *http://www.regulations.gov* at any time or to Room W12–140 on the ground floor of the DOT Headquarters Building at 1200 New Jersey Avenue SE., Washington, DC, 20590, between 9 a.m. and 5 p.m., ET, Monday through Friday, except Federal holidays.

Privacy Act: Anyone is able to search the electronic form of all comments received into any of our dockets by the name of the individual submitting the comment (or signing the comment, if submitted on behalf of an association, business, labor union, etc.). You may review DOT's Privacy Act System of Records Notice for the DOT Federal Docket Management System published in the **Federal Register** on January 17, 2008 (73 FR 3316), or you may visit *http://edocket.access.gpo.gov/2008/pdf/E8-785.pdf.*

Public Participation: The *http://www.regulations.gov* Web site is generally available 24 hours each day, 365 days each year. You can get electronic submission and retrieval help and guidelines under the ''help'' section of the *http://www.regulations.gov* Web site. Comments received after the comment closing date will be included in the docket, and will be considered to the extent practicable.

FOR FURTHER INFORMATION CONTACT: Marcelo Perez, FMCSA, North American Borders Division, 1200 New Jersey Avenue SE., Washington, DC 20590–0001. Telephone (512) 916–5440 Ext. 228; email *marcelo.perez@dot.gov.*

SUPPLEMENTARY INFORMATION:

Background

On May 25, 2007, the President signed into law the U.S. Troop Readiness, Veterans' Care, Katrina Recovery, and Iraq Accountability Appropriations Act, 2007 (the Act), (Pub. L. 110–28, 121 Stat. 112, 183, May 25, 2007). Section 6901 of the Act requires that certain actions be taken by the Department of Transportation (the Department) as a condition of obligating or expending appropriated funds to grant authority to Mexico-domiciled motor carriers to operate beyond the municipalities in the United States on the United States-Mexico international border or the commercial zones of such municipalities (border commercial zones).

On July 8, 2011, FMCSA announced in the **Federal Register** [76 FR 40420] its intent to proceed with the initiation of a U.S.-Mexico cross-border long-haul trucking pilot program to test and demonstrate the ability of Mexico-domiciled motor carriers to operate safely in the United States beyond the border commercial zones as detailed in the Agency's April 13, 2011, **Federal Register** notice [76 FR 20807]. The pilot program is a part of FMCSA's implementation of the North American Free Trade Agreement (NAFTA) cross-border long-haul trucking provisions in compliance with section 6901(b)(2)(B) of the Act. FMCSA reviewed, assessed, and evaluated the required safety measures as noted in the July 8, 2011, notice and considered all comments received on or before May 13, 2011, in response to the April 13, 2011, notice. Additionally, to the extent practicable, FMCSA considered comments received after May 13, 2011.

In accordance with section 6901(b)(2)(B)(i) of the Act, FMCSA is required to publish in the **Federal**

Register, and provide sufficient opportunity for public notice and comment comprehensive data and information on the PASAs conducted of motor carriers domiciled in Mexico that are granted authority to operate beyond the border commercial zones. This notice serves to fulfill this requirement.

FMCSA is publishing for public comment the data and information relating to one PASA that was completed on August 8, 2012. FMCSA announces that the Mexico-domiciled motor carrier in Table 1 successfully completed the PASA. Notice of this completion was also published in the FMCSA Register.

Tables 2, 3 and 4 all titled (''Successful Pre-Authorization Safety Audit (PASA) Information'') set out additional information on the carrier(s) noted in Table 1. A narrative description of each column in the tables is provided as follows:

A. *Row Number in the Appendix for the Specific Carrier:* The row number for each line in the tables.

B. *Name of Carrier:* The legal name of the Mexico-domiciled motor carrier that applied for authority to operate in the United States (U.S.) beyond the border commercial zones and was considered for participation in the long-haul pilot program.

C. *U.S. DOT Number:* The identification number assigned to the Mexico-domiciled motor carrier and required to be displayed on each side of the motor carrier's power units. If granted provisional operating authority, the Mexico-domiciled motor carrier will be required to add the suffix ''X'' to the ending of its assigned U.S. DOT Number for those vehicles approved to participate in the pilot program.

D. *FMCSA Register Number:* The number assigned to the Mexico-domiciled motor carrier's operating authority as found in the FMCSA Register.

E. *PASA Initiated:* The date the PASA was initiated.

F. *PASA Completed:* The date the PASA was completed.

G. *PASA Results:* The results upon completion of the PASA. The PASA receives a quality assurance review before approval. The quality assurance process involves a dual review by the FMCSA Division Office supervisor of the auditor assigned to conduct the PASA and by the FMCSA Service Center New Entrant Specialist designated for the specific FMCSA Division Office. This dual review ensures the successfully completed PASA was conducted in accordance with FMCSA policy, procedures and guidance. Upon approval, the PASA results are uploaded into the FMCSA's Motor Carrier Management Information System (MCMIS). The PASA information and results are then recorded in the Mexico-domiciled motor carrier's safety performance record in MCMIS.

H. *FMCSA Register:* The date FMCSA published notice of a successfully completed PASA in the FMCSA Register. The FMCSA Register notice advises interested parties that the application has been preliminarily granted and that protests to the application must be filed within 10 days of the publication date. Protests are filed with FMCSA Headquarters in Washington, DC. The notice in the FMCSA Register lists the following information:

a. Current registration number (e.g., MX–721816);

b. Date the notice was published in the FMCSA Register;

c. The applicant's name and address; and

d. Representative or contact information for the applicant.

The FMCSA Register may be accessed through FMCSA's Licensing and Insurance public Web site at *http://li-public.fmcsa.dot.gov/,* and selecting FMCSA Register in the drop down menu.

I. *U.S. Drivers:* The total number of the motor carrier's drivers approved for long-haul transportation in the United States beyond the border commercial zones.

J. *U.S. Vehicles:* The total number of the motor carrier's power units approved for long-haul transportation in the United States beyond the border commercial zones.

K. *Passed Verification of 5 Elements (Yes/No):* A Mexico-domiciled motor carrier will not be granted provisional operating authority if FMCSA cannot verify all of the following five mandatory elements. FMCSA must:

a. Verify a controlled substances and alcohol testing program consistent with 49 CFR part 40.

b. Verify a system of compliance with hours-of-service rules of 49 CFR part 395, including recordkeeping and retention;

c. Verify the ability to obtain financial responsibility as required by 49 CFR 387, including the ability to obtain insurance in the United States;

d. Verify records of periodic vehicle inspections; and

e. Verify the qualifications of each driver the carrier intends to use under such authority, as required by 49 CFR parts 383 and 391, including confirming the validity of each driver's Licencia Federal de Conductor and English language proficiency.

L. *If No, Which Element Failed:* If FMCSA cannot verify one or more of the five mandatory elements outlined in 49 CFR part 365, Appendix A, Section III, this column will specify which mandatory element(s) cannot be verified.

Please note that for items L through P below, during the PASA, after verifying the five mandatory elements discussed in item K above, FMCSA will gather information by reviewing a motor carrier's compliance with ''acute and critical'' regulations of the Federal Motor Carrier Safety Regulations (FMCSRs) and Hazardous Materials Regulations (HMRs). Acute regulations are those where noncompliance is so severe as to require immediate corrective actions by a motor carrier regardless of the overall basic safety management controls of the motor carrier. Critical regulations are those where noncompliance relates to management and/or operational controls. These regulations are indicative of breakdowns in a carrier's management controls. A list of acute and critical regulations is included in 49 CFR Part 385, Appendix B, Section VII.

Parts of the FMCSRs and HMRs having similar characteristics are combined together into six regulatory areas called ''factors.'' The regulatory factors are intended to evaluate the adequacy of a carrier's management controls.

M. *Passed Phase 1, Factor 1:* A ''yes'' in this column indicates the carrier has successfully met Factor 1 (listed in part 365, Subpart E, Appendix A, Section IV(f)). Factor 1 includes the General Requirements outlined in parts 387 (Minimum Levels of Financial Responsibility for Motor Carriers) and 390 (Federal Motor Carrier Safety Regulations—General).

N. *Passed Phase 1, Factor 2:* A ''yes'' in this column indicates the carrier has successfully met Factor 2, which includes the Driver Requirements outlined in parts 382 (Controlled Substances and Alcohol Use and Testing), 383 (Commercial Driver's License Standards; Requirements and Penalties) and 391 (Qualifications of Drivers and Longer Combination Vehicle (LCV) Driver Instructors).

O. *Passed Phase 1, Factor 3:* A ''yes'' in this column indicates the carrier has successfully met Factor 3, which includes the Operational Requirements outlined in parts 392 (Driving of Commercial Motor Vehicles) and 395 (Hours of Service of Drivers).

P. *Passed Phase 1, Factor 4:* A ''yes'' in this column indicates the carrier has

successfully met Factor 4, which includes the Vehicle Requirements outlined in parts 393 (Parts and Accessories Necessary for Safe Operation) and 396 (Inspection, Repair and Maintenance) and vehicle inspection and out-of-service data for the last 12 months.

Q. *Passed Phase 1, Factor 5:* A ''yes'' in this column indicates the carrier has successfully met Factor 5, which includes the hazardous material requirements outlined in parts 171 (General Information, Regulations, and Definitions), 177 (Carriage by Public Highway), 180 (Continuing Qualification and Maintenance of Packagings) and 397 (Transportation of Hazardous Materials; Driving and Parking Rules).

R. *Passed Phase 1, Factor 6:* A ''yes'' in this column indicates the carrier has successfully met Factor 6, which includes Accident History. This factor is the recordable accident rate during the past 12 months. A recordable ''accident'' is defined in 49 CFR 390.5, and means an accident involving a commercial motor vehicle operating on a public road in interstate or intrastate commerce which results in a fatality; a bodily injury to a person who, as a result of the injury, immediately received medical treatment away from the scene of the accident; or one or more motor vehicles incurring disabling damage as a result of the accident requiring the motor vehicle to be transported away from the scene by a tow truck or other motor vehicle.

S. *Number U.S. Vehicles Inspected:* The total number of vehicles (power units) the motor carrier is approved to operate in the United States beyond the border commercial zones that received a vehicle inspection during the PASA. During a PASA, FMCSA inspected all power units to be used by the motor carrier in the pilot program and applied a current Commercial Vehicle Safety Alliance (CVSA) inspection decal, if the inspection is passed successfully. This number reflects the vehicles that were inspected, irrespective of whether the vehicle received a CVSA inspection at the time of the PASA decal as a result of a passed inspection.

T. *Number U.S. Vehicles Issued CVSA Decal:* The total number of inspected vehicles (power units) the motor carrier is approved to operate in the United States beyond the border commercial zones that received a CVSA inspection decal as a result of an inspection during the PASA.

U. *Controlled Substances Collection:* Refers to the applicability and/or country of origin of the controlled substance and alcohol collection facility that will be used by a motor carrier that has successfully completed the PASA.

a. ''US'' means the controlled substance and alcohol collection facility is based in the United States.

b. ''MX'' means the controlled substance and alcohol collection facility is based in Mexico.

c. ''Non-CDL'' means that during the PASA, FMCSA verified that the motor carrier is not utilizing commercial motor vehicles subject to the commercial driver's license requirements as defined in 49 CFR 383.5 (Definition of Commercial Motor Vehicle). Any motor carrier that does not operate commercial motor vehicles as defined in § 383.5 is not subject to DOT controlled substance and alcohol testing requirements.

V. *Name of Controlled Substances and Alcohol Collection Facility:* Shows the name and location of the controlled substances and alcohol collection facility that will be used by a Mexico-domiciled motor carrier that has completed the PASA.

TABLE 1

Row number in Tables 2, 3 and 4 of the Appendix to today's notice	Name of carrier	USDOT No.
1	RAM Trucking SA de CV	2063285

TABLE 2—SUCCESSFUL PRE-AUTHORIZATION SAFETY AUDIT (PASA) INFORMATION

[See also tables 3 and 4]

Column A—row No.	Column B—name of carrier	Column C—USDOT No.	Column D—FMCSA register No.	Column E—PASA initiated	Column F—PASA completed	Column G—PASA results	Column H—FMCSA register	Column I—U.S. drivers	Column J—U.S. vehicles
1	RAM Trucking SA de CV	2063285	MX–721816	07/23/2012	08/08/2012	Pass		1	1

TABLE 3—SUCCESSFUL PRE-AUTHORIZATION SAFETY AUDIT (PASA) INFORMATION

[See also tables 2 and 4]

Column A—row No.	Column B—name of carrier	Column C—USDOT No.	Column D—FMCSA register No.	Column K—passed verification of 5 elements (yes/no)	Column L—if no, which element failed	Column M—passed phase 1 factor 1	Column N—passed phase 1 factor 2	Column O—passed phase 1 factor 3	Column P—passed phase 1 factor 4
1	RAM Trucking SA de CV	2063285	MX–721816	Yes	None	Pass	Pass	Pass	Pass.

TABLE 4—SUCCESSFUL PRE-AUTHORIZATION SAFETY AUDIT (PASA) INFORMATION AS OF SEPTEMBER 9, 2011
[See also tables 2 and 3]

Column A—row No.	Column B—name of carrier	Column C—USDOT No.	Column D—FMCSA register No.	Column Q—passed phase I factor 5	Column R—passed phase I factor 6	Column S—number U.S. vehicles inspected	Column T—number U.S. vehicles issued CVSA decal	Column U—controlled substance collection	Column V—name of controlled substances and alcohol collection facility
1	RAM Trucking SA de CV	2063285	MX–721816	N/A	Pass	1	1	MX	Laredo Antidoping Agency.

In an effort to provide as much information as possible for review, the application and PASA results for this carrier are posted at the Agency's Web site for the pilot program at *http://www.fmcsa.dot.gov/intl-programs/trucking/Trucking-Program.aspx.* For carriers that participated in the Agency's demonstration project that ended in 2009, copies of the previous PASA and compliance review, if conducted, are also posted. All documents were redacted so that personal information regarding the drivers is not released. Sensitive business information, such as the carrier's tax identification number, is also redacted. In response to previous comments received regarding the PASA notice process, FMCSA also posted copies of the vehicle inspections conducted during the PASA in the PASA document.

A list of the carrier's vehicles approved by FMCSA for use in the pilot program is also available at the above referenced Web site.

The Agency acknowledges that through the PASA process it was determined that RAM had affiliations not identified in the original application. It was noted during the Agency's vetting and documented as an attachment to the PASA. RAM submitted for the record a letter confirming the relationship with a U.S.-domiciled motor carrier, Zaro Transportation LLC, (USDOT# 1741743) and a commercial zone carrier, Auto Transportes Zaros SA de CV (USDOT# 1421433). During its vetting of the application and the PASA, FMCSA confirmed that RAM did not establish or use the affiliated companies to evade FMCSA regulation in continuing motor carrier operations, or for the purpose of avoiding or hiding previous non-compliance or safety problems.

FMCSA reviewed the inspection records of the affiliated carriers. Zaro Transportation, an OP–1 carrier, has Safety Measurement System (SMS) scores that exceed the Behavioral Analysis and Safety Improvement Categories (BASICs) thresholds in two areas in Driver Fitness and Vehicle Maintenance. Auto Transportes Zaros also has SMS scores that exceed the thresholds in Driver Fitness and Vehicle Maintenance. The Agency will be monitoring the safety of the affiliated carriers through SMS and will take action directly on those carriers, if appropriate.

Request for Comments

In accordance with the Act, FMCSA requests public comment from all interested persons on the PASA information presented in this notice. All comments received before the close of business on the comment closing date indicated at the beginning of this notice will be considered and will be available for examination in the docket at the location listed under the **ADDRESSES** section of this notice. Comments received after the comment closing date will be filed in the public docket and will be considered to the extent practicable. In addition to late comments, the FMCSA will also continue to file, in the public docket, relevant information that becomes available after the comment closing date. Interested persons should continue to examine the public docket for new material.

FMCSA notes that under its regulations, preliminary grants of authority, pending the carrier's showing of compliance with insurance and process agent requirements and the resolution of any protests, are publically noticed through publication in the FMCSA Register. Any protests of such grants must be filed within 10 days of publication of notice in the FMCSA Register.

Issued on: April 11, 2013.

Anne S. Ferro,

Administrator.

[FR Doc. 2013–09691 Filed 4–23–13; 8:45 am]

BILLING CODE 4910–EX–P

DEPARTMENT OF TRANSPORTATION

Federal Motor Carrier Safety Administration

[Docket No. FMCSA–2013–0023]

Qualification of Drivers; Exemption Applications; Vision

AGENCY: Federal Motor Carrier Safety Administration (FMCSA), DOT.

ACTION: Notice of final disposition.

SUMMARY: FMCSA announces its decision to exempt 3 individuals from the vision requirement in the Federal Motor Carrier Safety Regulations (FMCSRs). They are unable to meet the vision requirement in one eye for various reasons. The exemptions will enable these individuals to operate commercial motor vehicles (CMVs) in interstate commerce without meeting the prescribed vision requirement in one eye. The Agency has concluded that granting these exemptions will provide a level of safety that is equivalent to or greater than the level of safety maintained without the exemptions for these CMV drivers.

DATES: The exemptions are effective April 24, 2013. The exemptions expire on April 24, 2015.

FOR FURTHER INFORMATION CONTACT: Elaine M. Papp, Chief, Medical Programs Division, (202) 366–4001, *fmcsamedical@dot.gov,* FMCSA, Department of Transportation, 1200 New Jersey Avenue SE., Room W64–224, Washington, DC 20590–0001. Office hours are from 8:30 a.m. to 5 p.m. Monday through Friday, except Federal holidays.

SUPPLEMENTARY INFORMATION:

Electronic Access

You may see all the comments online through the Federal Document Management System (FDMS) at *http://www.regulations.gov.*

Docket: For access to the docket to read background documents or comments, go to *http://www.regulations.gov* at any time or

Room W12–140 on the ground level of the West Building, 1200 New Jersey Avenue SE., Washington, DC, between 9 a.m. and 5 p.m., Monday through Friday, except Federal holidays. The FDMS is available 24 hours each day, 365 days each year. If you want acknowledgement that we received your comments, please include a self-addressed, stamped envelope or postcard or print the acknowledgement page that appears after submitting comments on-line.

Privacy Act: Anyone may search the electronic form of all comments received into any of our dockets by the name of the individual submitting the comment (or of the person signing the comment, if submitted on behalf of an association, business, labor union, etc.). You may review DOT's Privacy Act Statement for the Federal Docket Management System (FDMS) published in the **Federal Register** on January 17, 2008 (73 FR 3316).

Background

On March 5, 2013, FMCSA published a notice of receipt of exemption applications from certain individuals, and requested comments from the public (78 FR 14405). That notice listed 3 applicants' case histories. The 3 individuals applied for exemptions from the vision requirement in 49 CFR 391.41(b)(10), for drivers who operate CMVs in interstate commerce.

Under 49 U.S.C. 31136(e) and 31315, FMCSA may grant an exemption for a 2-year period if it finds ''such exemption would likely achieve a level of safety that is equivalent to or greater than the level that would be achieved absent such exemption.'' The statute also allows the Agency to renew exemptions at the end of the 2-year period. Accordingly, FMCSA has evaluated the 3 applications on their merits and made a determination to grant exemptions to each of them.

Vision and Driving Experience of the Applicants

The vision requirement in the FMCSRs provides:

A person is physically qualified to drive a commercial motor vehicle if that person has distant visual acuity of at least 20/40 (Snellen) in each eye without corrective lenses or visual acuity separately corrected to 20/40 (Snellen) or better with corrective lenses, distant binocular acuity of a least 20/40 (Snellen) in both eyes with or without corrective lenses, field of vision of at least 70° in the horizontal meridian in each eye, and the ability to recognize the colors of traffic signals and devices showing requirement red, green, and amber (49 CFR 391.41(b)(10)).

FMCSA recognizes that some drivers do not meet the vision requirement but have adapted their driving to accommodate their vision limitation and demonstrated their ability to drive safely. The 3 exemption applicants listed in this notice are in this category. They are unable to meet the vision requirement in one eye for various reasons, including a retinal detachment, a prosthetic eye, and optic neuritis. In most cases, their eye conditions were not recently developed. One of the applicants was either born with their vision impairments or have had them since childhood.

The two individuals that sustained their vision conditions as adults have had it for a period of 4 to 12 years.

Although each applicant has one eye which does not meet the vision requirement in 49 CFR 391.41(b)(10), each has at least 20/40 corrected vision in the other eye, and in a doctor's opinion, has sufficient vision to perform all the tasks necessary to operate a CMV. Doctors' opinions are supported by the applicants' possession of valid commercial driver's licenses (CDLs) or non-CDLs to operate CMVs. Before issuing CDLs, States subject drivers to knowledge and skills tests designed to evaluate their qualifications to operate a CMV.

All of these applicants satisfied the testing requirements for their State of residence. By meeting State licensing requirements, the applicants demonstrated their ability to operate a CMV, with their limited vision, to the satisfaction of the State.

While possessing a valid CDL or non-CDL, these 3 drivers have been authorized to drive a CMV in intrastate commerce, even though their vision disqualified them from driving in interstate commerce. They have driven CMVs with their limited vision for careers ranging from 4 to 16 years. In the past 3 years, none of the drivers were involved in crashes but one was convicted of a moving violation in a CMV.

The qualifications, experience, and medical condition of each applicant were stated and discussed in detail in the March 5, 2013 notice (78 FR 14405).

Basis for Exemption Determination

Under 49 U.S.C. 31136(e) and 31315, FMCSA may grant an exemption from the vision requirement in 49 CFR 391.41(b)(10) if the exemption is likely to achieve an equivalent or greater level of safety than would be achieved without the exemption. Without the exemption, applicants will continue to be restricted to intrastate driving. With the exemption, applicants can drive in interstate commerce. Thus, our analysis focuses on whether an equal or greater level of safety is likely to be achieved by permitting each of these drivers to drive in interstate commerce as opposed to restricting him or her to driving in intrastate commerce.

To evaluate the effect of these exemptions on safety, FMCSA considered the medical reports about the applicants' vision as well as their driving records and experience with the vision deficiency.

To qualify for an exemption from the vision requirement, FMCSA requires a person to present verifiable evidence that he/she has driven a commercial vehicle safely with the vision deficiency for the past 3 years. Recent driving performance is especially important in evaluating future safety, according to several research studies designed to correlate past and future driving performance. Results of these studies support the principle that the best predictor of future performance by a driver is his/her past record of crashes and traffic violations. Copies of the studies may be found at Docket Number FMCSA–1998–3637.

We believe we can properly apply the principle to monocular drivers, because data from the Federal Highway Administration's (FHWA) former waiver study program clearly demonstrate the driving performance of experienced monocular drivers in the program is better than that of all CMV drivers collectively (See 61 FR 13338, 13345, March 26, 1996). The fact that experienced monocular drivers demonstrated safe driving records in the waiver program supports a conclusion that other monocular drivers, meeting the same qualifying conditions as those required by the waiver program, are also likely to have adapted to their vision deficiency and will continue to operate safely.

The first major research correlating past and future performance was done in England by Greenwood and Yule in 1920. Subsequent studies, building on that model, concluded that crash rates for the same individual exposed to certain risks for two different time periods vary only slightly (See Bates and Neyman, University of California Publications in Statistics, April 1952). Other studies demonstrated theories of predicting crash proneness from crash history coupled with other factors. These factors—such as age, sex, geographic location, mileage driven and conviction history—are used every day by insurance companies and motor vehicle bureaus to predict the

probability of an individual experiencing future crashes (See Weber, Donald C., ''Accident Rate Potential: An Application of Multiple Regression Analysis of a Poisson Process,'' Journal of American Statistical Association, June 1971). A 1964 California Driver Record Study prepared by the California Department of Motor Vehicles concluded that the best overall crash predictor for both concurrent and nonconcurrent events is the number of single convictions. This study used 3 consecutive years of data, comparing the experiences of drivers in the first 2 years with their experiences in the final year.

Applying principles from these studies to the past 3-year record of the 3 applicants, none of the drivers were involved in crashes but one was convicted of a moving violation in a CMV. All the applicants achieved a record of safety while driving with their vision impairment, demonstrating the likelihood that they have adapted their driving skills to accommodate their condition. As the applicants' ample driving histories with their vision deficiencies are good predictors of future performance, FMCSA concludes their ability to drive safely can be projected into the future.

We believe that the applicants' intrastate driving experience and history provide an adequate basis for predicting their ability to drive safely in interstate commerce. Intrastate driving, like interstate operations, involves substantial driving on highways on the interstate system and on other roads built to interstate standards. Moreover, driving in congested urban areas exposes the driver to more pedestrian and vehicular traffic than exists on interstate highways. Faster reaction to traffic and traffic signals is generally required because distances between them are more compact. These conditions tax visual capacity and driver response just as intensely as interstate driving conditions. The veteran drivers in this proceeding have operated CMVs safely under those conditions for at least 3 years, most for much longer. Their experience and driving records lead us to believe that each applicant is capable of operating in interstate commerce as safely as he/she has been performing in intrastate commerce. Consequently, FMCSA finds that exempting these applicants from the vision requirement in 49 CFR 391.41(b)(10) is likely to achieve a level of safety equal to that existing without the exemption. For this reason, the Agency is granting the exemptions for the 2-year period allowed by 49 U.S.C. 31136(e) and 31315 to the 3 applicants listed in the notice of March 5, 2013 (78 FR 14405).

We recognize that the vision of an applicant may change and affect his/her ability to operate a CMV as safely as in the past. As a condition of the exemption, therefore, FMCSA will impose requirements on the 3 individuals consistent with the grandfathering provisions applied to drivers who participated in the Agency's vision waiver program.

Those requirements are found at 49 CFR 391.64(b) and include the following: (1) That each individual be physically examined every year (a) by an ophthalmologist or optometrist who attests that the vision in the better eye continues to meet the requirement in 49 CFR 391.41(b)(10) and (b) by a medical examiner who attests that the individual is otherwise physically qualified under 49 CFR 391.41; (2) that each individual provide a copy of the ophthalmologist's or optometrist's report to the medical examiner at the time of the annual medical examination; and (3) that each individual provide a copy of the annual medical certification to the employer for retention in the driver's qualification file, or keep a copy in his/her driver's qualification file if he/she is self-employed. The driver must have a copy of the certification when driving, for presentation to a duly authorized Federal, State, or local enforcement official.

Discussion of Comments

FMCSA received one comment in this proceeding. The comment is considered and discussed below.

The Pennsylvania Department of Transportation is in favor of granting an exemption to Gale Smith after reviewing his driving history.

Conclusion

Based upon its evaluation of the 3 exemption applications, FMCSA exempts David Doub (IN), Gregory S. Engleman (KY), and Gale Smith (PA) from the vision requirement in 49 CFR 391.41(b)(10), subject to the requirements cited above (49 CFR 391.64(b)).

In accordance with 49 U.S.C. 31136(e) and 31315, each exemption will be valid for 2 years unless revoked earlier by FMCSA. The exemption will be revoked if: (1) The person fails to comply with the terms and conditions of the exemption; (2) the exemption has resulted in a lower level of safety than was maintained before it was granted; or (3) continuation of the exemption would not be consistent with the goals and objectives of 49 U.S.C. 31136 and 31315.

If the exemption is still effective at the end of the 2-year period, the person may apply to FMCSA for a renewal under procedures in effect at that time.

Issued on: April 12, 2013.

Larry W. Minor,

Associate Administration for Policy.

[FR Doc. 2013–09693 Filed 4–23–13; 8:45 am]

BILLING CODE 4910–EX–P

DEPARTMENT OF TRANSPORTATION

Federal Motor Carrier Safety Administration

[Docket No. FMCSA–2011–0057]

Qualification of Drivers; Exemption Applications; Vision

AGENCY: Federal Motor Carrier Safety Administration (FMCSA), DOT.

ACTION: Notice of renewal of exemptions; request for comments.

SUMMARY: FMCSA announces its decision to renew the exemptions from the vision requirement in the Federal Motor Carrier Safety Regulations for 15 individuals. FMCSA has statutory authority to exempt individuals from the vision requirement if the exemptions granted will not compromise safety. The Agency has concluded that granting these exemption renewals will provide a level of safety that is equivalent to or greater than the level of safety maintained without the exemptions for these commercial motor vehicle (CMV) drivers.

DATES: This decision is effective May 19, 2013. Comments must be received on or before May 24, 2013.

ADDRESSES: You may submit comments bearing the Federal Docket Management System (FDMS) numbers: Docket No. [FMCSA–2011–0057]], using any of the following methods:

- Federal eRulemaking Portal: Go to *http://www.regulations.gov.* Follow the on-line instructions for submitting comments.
- Mail: Docket Management Facility; U.S. Department of Transportation, 1200 New Jersey Avenue SE., West Building Ground Floor, Room W12–140, Washington, DC 20590–0001.
- Hand Delivery or Courier: West Building Ground Floor, Room W12–140, 1200 New Jersey Avenue SE., Washington, DC, between 9 a.m. and 5 p.m., Monday through Friday, except Federal Holidays.
- Fax: 1–202–493–2251.

Instructions: Each submission must include the Agency name and the docket number for this notice. Note that

DOT posts all comments received without change to *http://www.regulations.gov,* including any personal information included in a comment. Please see the Privacy Act heading below.

Docket: For access to the docket to read background documents or comments, go to *http://www.regulations.gov* at any time or Room W12–140 on the ground level of the West Building, 1200 New Jersey Avenue SE., Washington, DC, between 9 a.m. and 5 p.m., Monday through Friday, except Federal holidays. The Federal Docket Management System (FDMS) is available 24 hours each day, 365 days each year. If you want acknowledgment that we received your comments, please include a self-addressed, stamped envelope or postcard or print the acknowledgement page that appears after submitting comments on-line.

Privacy Act: Anyone may search the electronic form of all comments received into any of our dockets by the name of the individual submitting the comment (or of the person signing the comment, if submitted on behalf of an association, business, labor union, etc.). You may review DOT's Privacy Act Statement for the Federal Docket Management System (FDMS) published in the **Federal Register** on January 17, 2008 (73 FR 3316).

FOR FURTHER INFORMATION CONTACT:

Elaine M. Papp, Chief, Medical Programs Division, 202–366–4001, *fmcsamedical@dot.gov,* FMCSA, Department of Transportation, 1200 New Jersey Avenue SE., Room W64–224, Washington, DC 20590–0001. Office hours are from 8:30 a.m. to 5 p.m. Monday through Friday, except Federal holidays.

SUPPLEMENTARY INFORMATION:

Background

Under 49 U.S.C. 31136(e) and 31315, FMCSA may renew an exemption from the vision requirements in 49 CFR 391.41(b)(10), which applies to drivers of CMVs in interstate commerce, for a two-year period if it finds ''such exemption would likely achieve a level of safety that is equivalent to or greater than the level that would be achieved absent such exemption.'' The procedures for requesting an exemption (including renewals) are set out in 49 CFR part 381.

Exemption Decision

This notice addresses 15 individuals who have requested renewal of their exemptions in accordance with FMCSA procedures. FMCSA has evaluated these 15 applications for renewal on their merits and decided to extend each exemption for a renewable two-year period. They are:

Luis A. Bejarano (AZ)
Richard T. Berendt (OH)
James P. Lanigan (OH)
Nusret Odzakovic (FL)
James O. Cook (GA)
Timothy J. Curran (CA)
Alfred D. Hewitt (IL)
Luke R. Lafley (WA)
Kevin R. Lambert (NC)
Scott W. Schilling (ND)
Randy E. Sims (WA)
Halman Smith (DE)
Mark A. Kleinow (IA)
Robert D. Smith (OH)
Richard D. Williams (OK)

The exemptions are extended subject to the following conditions: (1) That each individual has a physical examination every year (a) by an ophthalmologist or optometrist who attests that the vision in the better eye continues to meet the requirements in 49 CFR 391.41(b)(10), and (b) by a medical examiner who attests that the individual is otherwise physically qualified under 49 CFR 391.41; (2) that each individual provides a copy of the ophthalmologist's or optometrist's report to the medical examiner at the time of the annual medical examination; and (3) that each individual provide a copy of the annual medical certification to the employer for retention in the driver's qualification file and retains a copy of the certification on his/her person while driving for presentation to a duly authorized Federal, State, or local enforcement official. Each exemption will be valid for two years unless rescinded earlier by FMCSA. The exemption will be rescinded if: (1) The person fails to comply with the terms and conditions of the exemption; (2) the exemption has resulted in a lower level of safety than was maintained before it was granted; or (3) continuation of the exemption would not be consistent with the goals and objectives of 49 U.S.C. 31136(e) and 31315.

Basis for Renewing Exemptions

Under 49 U.S.C. 31315(b)(1), an exemption may be granted for no longer than two years from its approval date and may be renewed upon application for additional two year periods. In accordance with 49 U.S.C. 31136(e) and 31315, each of the 15 applicants has satisfied the entry conditions for obtaining an exemption from the vision requirements (76 FR 18824; 76 FR 29024). Each of these 15 applicants has requested renewal of the exemption and has submitted evidence showing that the vision in the better eye continues to meet the requirement specified at 49 CFR 391.41(b)(10) and that the vision impairment is stable. In addition, a review of each record of safety while driving with the respective vision deficiencies over the past two years indicates each applicant continues to meet the vision exemption requirements. These factors provide an adequate basis for predicting each driver's ability to continue to drive safely in interstate commerce. Therefore, FMCSA concludes that extending the exemption for each renewal applicant for a period of two years is likely to achieve a level of safety equal to that existing without the exemption.

Request for Comments

FMCSA will review comments received at any time concerning a particular driver's safety record and determine if the continuation of the exemption is consistent with the requirements at 49 U.S.C. 31136(e) and 31315. However, FMCSA requests that interested parties with specific data concerning the safety records of these drivers submit comments by May 24, 2013.

FMCSA believes that the requirements for a renewal of an exemption under 49 U.S.C. 31136(e) and 31315 can be satisfied by initially granting the renewal and then requesting and evaluating, if needed, subsequent comments submitted by interested parties. As indicated above, the Agency previously published notices of final disposition announcing its decision to exempt these 15 individuals from the vision requirement in 49 CFR 391.41(b)(10). The final decision to grant an exemption to each of these individuals was made on the merits of each case and made only after careful consideration of the comments received to its notices of applications. The notices of applications stated in detail the qualifications, experience, and medical condition of each applicant for an exemption from the vision requirements. That information is available by consulting the above cited **Federal Register** publications.

Interested parties or organizations possessing information that would otherwise show that any, or all, of these drivers are not currently achieving the statutory level of safety should immediately notify FMCSA. The Agency will evaluate any adverse evidence submitted and, if safety is being compromised or if continuation of the exemption would not be consistent with the goals and objectives of 49 U.S.C. 31136(e) and 31315, FMCSA will

take immediate steps to revoke the exemption of a driver.

Issued on: April 12, 2013.

Larry W. Minor,

Associate Administrator for Policy.

[FR Doc. 2013–09694 Filed 4–23–13; 8:45 am]

BILLING CODE 4910–EX–P

DEPARTMENT OF TRANSPORTATION

Federal Motor Carrier Safety Administration

[Docket No. FMCSA–2006–24783; FMCSA–2007–27333; FMCSA–2009–0054; FMCSA–2011–0010; FMCSA–2010–0201; FMCSA–2011–0024]

Qualification of Drivers; Exemption Applications; Vision

AGENCY: Federal Motor Carrier Safety Administration (FMCSA), DOT.

ACTION: Notice of renewal of exemptions; request for comments.

SUMMARY: FMCSA announces its decision to renew the exemptions from the vision requirement in the Federal Motor Carrier Safety Regulations for 15 individuals. FMCSA has statutory authority to exempt individuals from the vision requirement if the exemptions granted will not compromise safety. The Agency has concluded that granting these exemption renewals will provide a level of safety that is equivalent to or greater than the level of safety maintained without the exemptions for these commercial motor vehicle (CMV) drivers.

DATES: This decision is effective May 13, 2013. Comments must be received on or before May 24, 2013.

ADDRESSES: You may submit comments bearing the Federal Docket Management System (FDMS) numbers: [Docket No. FMCSA–2006–24783; FMCSA–2007–27333; FMCSA–2009–0054; FMCSA–2011–0010; FMCSA–2010–0201; FMCSA–2011–0024], using any of the following methods:

- Federal eRulemaking Portal: Go to *http://www.regulations.gov*. Follow the on-line instructions for submitting comments.
- Mail: Docket Management Facility; U.S. Department of Transportation, 1200 New Jersey Avenue SE., West Building Ground Floor, Room W12–140, Washington, DC 20590–0001.
- Hand Delivery or Courier: West Building Ground Floor, Room W12–140, 1200 New Jersey Avenue SE., Washington, DC, between 9 a.m. and 5 p.m., Monday through Friday, except Federal Holidays.
- Fax: 1–202–493–2251.

Instructions: Each submission must include the Agency name and the docket number for this notice. Note that DOT posts all comments received without change to *http://www.regulations.gov*, including any personal information included in a comment. Please see the Privacy Act heading below.

Docket: For access to the docket to read background documents or comments, go to *http://www.regulations.gov* at any time or Room W12–140 on the ground level of the West Building, 1200 New Jersey Avenue SE., Washington, DC, between 9 a.m. and 5 p.m., Monday through Friday, except Federal holidays. The Federal Docket Management System (FDMS) is available 24 hours each day, 365 days each year. If you want acknowledgment that we received your comments, please include a self-addressed, stamped envelope or postcard or print the acknowledgement page that appears after submitting comments on-line.

Privacy Act: Anyone may search the electronic form of all comments received into any of our dockets by the name of the individual submitting the comment (or of the person signing the comment, if submitted on behalf of an association, business, labor union, etc.). You may review DOT's Privacy Act Statement for the Federal Docket Management System (FDMS) published in the **Federal Register** on December 29, 2010 (75 FR 82132), or you may visit *http://www.gpo.gov/fdsys/pkg/FR-2010-12-29/pdf/2010-32876.pdf*.

FOR FURTHER INFORMATION CONTACT: Elaine M. Papp, Chief, Medical Programs Division, 202–366–4001, *fmcsamedical@dot.gov*, FMCSA, Department of Transportation, 1200 New Jersey Avenue SE., Room W64–224, Washington, DC 20590–0001. Office hours are from 8:30 a.m. to 5 p.m. Monday through Friday, except Federal holidays.

SUPPLEMENTARY INFORMATION:

Background

Under 49 U.S.C. 31136(e) and 31315, FMCSA may renew an exemption from the vision requirements in 49 CFR 391.41(b)(10), which applies to drivers of CMVs in interstate commerce, for a two-year period if it finds ''such exemption would likely achieve a level of safety that is equivalent to or greater than the level that would be achieved absent such exemption.'' The procedures for requesting an exemption (including renewals) are set out in 49 CFR part 381.

Exemption Decision

This notice addresses 15 individuals who have requested renewal of their exemptions in accordance with FMCSA procedures. FMCSA has evaluated these 15 applications for renewal on their merits and decided to extend each exemption for a renewable two-year period. They are:

David W. Bennett (NC)
Toby L. Carson (TN)
Johnnie L. Hall (MD)
Clifford D. Johnson (VA)
David J. Kibble (PA)
Michael Lafferty (ID)
Randy M. Lane (PA)
Dionicio Mendoza (TX)
Raymond J. Paiz (CA)
Michael O. Regentik (MI)
Ronald M. Robinson (KY)
Esequiel Rodriguez, Jr. (TX)
George K. Sizemore (NC)
Donald E. Stone (VA)
Richard A. Westfall (OH)

The exemptions are extended subject to the following conditions: (1) That each individual has a physical examination every year (a) by an ophthalmologist or optometrist who attests that the vision in the better eye continues to meet the requirements in 49 CFR 391.41(b)(10), and (b) by a medical examiner who attests that the individual is otherwise physically qualified under 49 CFR 391.41; (2) that each individual provides a copy of the ophthalmologist's or optometrist's report to the medical examiner at the time of the annual medical examination; and (3) that each individual provide a copy of the annual medical certification to the employer for retention in the driver's qualification file and retains a copy of the certification on his/her person while driving for presentation to a duly authorized Federal, State, or local enforcement official. Each exemption will be valid for two years unless rescinded earlier by FMCSA. The exemption will be rescinded if: (1) The person fails to comply with the terms and conditions of the exemption; (2) the exemption has resulted in a lower level of safety than was maintained before it was granted; or (3) continuation of the exemption would not be consistent with the goals and objectives of 49 U.S.C. 31136(e) and 31315.

Basis for Renewing Exemptions

Under 49 U.S.C. 31315(b)(1), an exemption may be granted for no longer than two years from its approval date and may be renewed upon application for additional two year periods. In accordance with 49 U.S.C. 31136(e) and 31315, each of the 15 applicants has satisfied the entry conditions for

obtaining an exemption from the vision requirements (71 FR 32183; 71 FR 41310; 72 FR 12666; 72 FR 25831; 73 FR 61925; 74 FR 11988; 74 FR 15586; 74 FR 21427; 75 FR 54958; 75 FR 70078; 76 FR 9856 76 FR 17481; 76 FR 17483; 76 FR 20076; 76 FR 21796; 76 FR 28125). Each of these 15 applicants has requested renewal of the exemption and has submitted evidence showing that the vision in the better eye continues to meet the requirement specified at 49 CFR 391.41(b)(10) and that the vision impairment is stable. In addition, a review of each record of safety while driving with the respective vision deficiencies over the past two years indicates each applicant continues to meet the vision exemption requirements. These factors provide an adequate basis for predicting each driver's ability to continue to drive safely in interstate commerce. Therefore, FMCSA concludes that extending the exemption for each renewal applicant for a period of two years is likely to achieve a level of safety equal to that existing without the exemption.

Request for Comments

FMCSA will review comments received at any time concerning a particular driver's safety record and determine if the continuation of the exemption is consistent with the requirements at 49 U.S.C. 31136(e) and 31315. However, FMCSA requests that interested parties with specific data concerning the safety records of these drivers submit comments by May 24, 2013.

FMCSA believes that the requirements for a renewal of an exemption under 49 U.S.C. 31136(e) and 31315 can be satisfied by initially granting the renewal and then requesting and evaluating, if needed, subsequent comments submitted by interested parties. As indicated above, the Agency previously published notices of final disposition announcing its decision to exempt these 15 individuals from the vision requirement in 49 CFR 391.41(b)(10). The final decision to grant an exemption to each of these individuals was made on the merits of each case and made only after careful consideration of the comments received to its notices of applications. The notices of applications stated in detail the qualifications, experience, and medical condition of each applicant for an exemption from the vision requirements. That information is available by consulting the above cited **Federal Register** publications.

Interested parties or organizations possessing information that would otherwise show that any, or all, of these drivers are not currently achieving the statutory level of safety should immediately notify FMCSA. The Agency will evaluate any adverse evidence submitted and, if safety is being compromised or if continuation of the exemption would not be consistent with the goals and objectives of 49 U.S.C. 31136(e) and 31315, FMCSA will take immediate steps to revoke the exemption of a driver.

Issued on: April 12, 2013.

Larry W. Minor,

Associate Administrator for Policy.

[FR Doc. 2013–09697 Filed 4–23–13; 8:45 am]

BILLING CODE 4910–EX–P

DEPARTMENT OF TRANSPORTATION

Federal Motor Carrier Safety Administration

[Docket No. FMCSA–2013–0106]

Qualification of Drivers; Exemption Applications; Epilepsy and Seizure Disorders

AGENCY: Federal Motor Carrier Safety Administration (FMCSA), DOT.

ACTION: Notice of applications for exemption, request for comments.

SUMMARY: FMCSA announces receipt of applications from 10 individuals for an exemption from the prohibition against persons with a clinical diagnosis of epilepsy or any other condition which is likely to cause a loss of consciousness or any loss of ability to operate a commercial motor vehicle (CMV) from operating CMVs in interstate commerce. The regulation and the associated advisory criteria published in the Code of Federal Regulations as the ''Instructions for Performing and Recording Physical Examinations'' have resulted in numerous drivers being prohibited from operating CMVs in interstate commerce based on the fact that they have had one or more seizures and are taking anti-seizure medication, rather than an individual analysis of their circumstances by a qualified medical examiner. If granted, the exemptions would enable these individuals who have had one or more seizures and are taking anti-seizure medication to operate CMVs for 2 years in interstate commerce.

DATES: Comments must be received on or before May 24, 2013.

ADDRESSES: You may submit comments bearing the Federal Docket Management System (FDMS) Docket ID FMCSA–2013–0106– using any of the following methods:

- Federal eRulemaking Portal: Go to *http://www.regulations.gov*. Follow the on-line instructions for submitting comments.
- Mail: Docket Management Facility; U.S. Department of Transportation, 1200 New Jersey Avenue SE., West Building Ground Floor, Room W12–140, Washington, DC 20590–0001.
- Hand Delivery: West Building Ground Floor, Room W12–140, 1200 New Jersey Avenue SE., Washington, DC, between 9 a.m. and 5 p.m., Monday through Friday, except Federal Holidays.
- Fax: 1–202–493–2251.

Each submission must include the Agency name and the docket ID for this Notice. Note that DOT posts all comments received without change to *http://www.regulations.gov,* including any personal information included in a comment. Please see the Privacy Act heading below.

Docket: For access to the docket to read background documents or comments, go to *http://www.regulations.gov* at any time or Room W12–140 on the ground level of the West Building, 1200 New Jersey Avenue SE., Washington, DC, between 9 a.m. and 5 p.m., Monday through Friday, except Federal holidays. The FDMS is available 24 hours each day, 365 days each year. If you want acknowledgment that we received your comments, please include a self-addressed, stamped envelope or postcard or print the acknowledgement page that appears after submitting comments on-line.

Privacy Act: Anyone may search the electronic form of all comments received into any of our dockets by the name of the individual submitting the comment (or of the person signing the comment, if submitted on behalf of an association, business, labor union, etc.). You may review the DOT's complete Privacy Act Statement in the **Federal Register** published on January 17, 2008 (73 FR 3316; January 17, 2008). This information is also available at *http://Docketinfo.dot.gov*.

FOR FURTHER INFORMATION CONTACT: Elaine Papp, Chief, Medical Programs Division, (202) 366–4001, or via email at *fmcsamedical@dot.gov,* or by letter FMCSA, Room W64–113, Department of Transportation, 1200 New Jersey Avenue SE., Washington, DC 20590–0001. Office hours are from 8:30 a.m. to 5 p.m., Monday through Friday, except Federal holidays.

SUPPLEMENTARY INFORMATION:

Background

Under 49 U.S.C. 31315 and 31136(e), FMCSA may grant an exemption for a 2-

year period if it finds ''such exemption would likely achieve a level of safety that is equivalent to or greater than the level that would be achieved absent such exemption.'' The statutes also allow the Agency to renew exemptions at the end of the 2-year period. The 10 individuals listed in this notice have recently requested an exemption from the epilepsy prohibition in 49 CFR 391.41(b)(8), which applies to drivers who operate CMVs as defined in 49 CFR 390.5, in interstate commerce. Section 391.41(b)(8) states that a person is physically qualified to drive a commercial motor vehicle if that person has no established medical history or clinical diagnosis of epilepsy or any other condition which is likely to cause the loss of consciousness or any loss of ability to control a CMV.

FMCSA provides medical advisory criteria for use by medical examiners in determining whether drivers with certain medical conditions should be certified to operate CMVs in intrastate commerce. The advisory criteria indicate that if an individual has had a sudden episode of a non-epileptic seizure or loss of consciousness of unknown cause which did not require anti-seizure medication, the decision whether that person's condition is likely to cause the loss of consciousness or loss of ability to control a CMV should be made on an individual basis by the medical examiner in consultation with the treating physician. Before certification is considered, it is suggested that a 6-month waiting period elapse from the time of the episode. Following the waiting period, it is suggested that the individual have a complete neurological examination. If the results of the examination are negative and anti-seizure medication is not required, then the driver may be qualified.

In those individual cases where a driver had a seizure or an episode of loss of consciousness that resulted from a known medical condition (e.g., drug reaction, high temperature, acute infectious disease, dehydration, or acute metabolic disturbance), certification should be deferred until the driver has fully recovered from that condition, has no existing residual complications, and is not taking anti-seizure medication. Drivers who have a history of epilepsy/seizures, off anti-seizure medication and seizure-free for 10 years, may be qualified to operate a CMV in interstate commerce. Interstate drivers with a history of a single unprovoked seizure may be qualified to drive a CMV in interstate commerce if seizure-free and off anti-seizure medication for a 5-year period or more.

Summary of Applications

Steven L. Gordon

Mr. Gordon is a 57 year-old CMV driver in Montana. He has a history of seizures as a result of a head injury in 1986 and his last seizure was in 2005. He takes anti-seizure medication with the dosage and frequency remaining the same for over 7 years. If granted the exemption, he would like to drive a tractor trailer. His physician states he is supportive of Mr. Gordon receiving an exemption to operate a CMV.

Kevin A. Jandreau

Mr. Jandreau is a 46 year-old Class A CMV driver in Maine. He has a diagnosis of seizure disorder. He has remained seizure free for at least 15 years. He takes anti-seizure medication with the dosage and frequency remaining the same for 15 years. If granted the exemption, he would like to drive a tractor trailer.

Jason C. Kirkham

Mr. Kirkham is a 39 year-old CMV driver in Wisconsin. He has a history of seizures and has remained seizure free for 17 years. He takes anti-seizure medication with the dosage and frequency remaining the same for 17 years. If granted the exemption, he would like to drive straight trucks, cranes, or heavy equipment. His physician states he is supportive of Mr. Kirkham receiving an exemption.

James M. Kivett, Jr.

Mr. Kivett is a 49 year-old CMV driver in Ohio. He has a history of seizures due to a brain tumor, which was removed in 2005. He has remained seizure free for more than 1 year. He takes anti-seizure medication. If granted the exemption, he would like to drive a tractor trailer. His physician states he is supportive of Mr. Kivett returning to work as a commercial driver after 3 months.

William P. Lago

Mr. Lago is a 26 year-old driver in Massachusetts. He has a diagnosis of epilepsy and has remained seizure free for 8 years. He takes anti-seizure medication with the dosage and frequency remaining the same since June 2010. If granted the exemption, he would like to drive a dump truck.

Michael K. Lail

Mr. Lail is a 54 year-old CMV driver in North Carolina. He had a single post-traumatic seizure 46 years ago and has remained seizure free since that time. Mr. Lail has not taken anti-seizure medication since July 2012. If granted the exemption, he would like to drive a tractor trailer. His physician states he is supportive of Mr. Lail receiving an exemption.

Verbon T. Latta

Mr. Latta is a 43 year-old driver in Alabama. He has had 2 seizures, both in May of 2007, 13 days apart while on a new medication following back surgery. He has remained seizure free since that time. He takes anti-seizure medication with the dosage and frequency remaining the same for 6 years. If granted the exemption, he would like to drive a tractor trailer.

Jeffrey P. Moore

Mr. Moore is a 36 year-old driver in New York. He has a diagnosis of seizure disorder and his last seizure was in July of 1999. He has remained seizure free since that time. He takes anti-seizure medication with the dosage and frequency remaining the same for over 12 years. If granted the exemption, he would like to drive a box truck or van.

Michael E. Righter

Mr. Righter is a 38 year-old driver in Pennsylvania. Mr. Righter has a diagnosis of seizure disorder and his last seizure was in March of 1987. He has remained seizure free since that time. He takes anti-seizure medication with the dosage and frequency remaining the same for over 20 years. If granted the exemption, he would like to drive a Class B truck with air brakes.

Douglas S. Slagel

Mr. Slagel is a 48 year-old CMV driver in Ohio. Mr. Slagel has a diagnosis of seizure disorder and his last seizure was in 1977. He has remained seizure free since that time. He takes anti-seizure medication with the dosage and frequency remaining the same for over 20 years. If granted the exemption, he would like to a Class B truck with air brakes. His physician is supportive of Mr. Slagel receiving his exemption.

Request for Comments

In accordance with 49 U.S.C. 31315 and 31136(e), FMCSA requests public comment from all interested persons on the exemption applications described in this notice. We will consider all comments received before the close of business on the closing date indicated earlier in the notice.

Issued on: April 9, 2013.

Larry W. Minor,

Associate Administrator for Policy.

[FR Doc. 2013–09690 Filed 4–23–13; 8:45 am]

BILLING CODE 4910–EX–P

DEPARTMENT OF TRANSPORTATION

Federal Motor Carrier Safety Administration

[FMCSA Docket No. FMCSA–2013–0013]

Qualification of Drivers; Exemption Applications; Diabetes Mellitus

AGENCY: Federal Motor Carrier Safety Administration (FMCSA), DOT.

ACTION: Notice of final disposition.

SUMMARY: FMCSA announces its decision to exempt 25 individuals from its rule prohibiting persons with insulin-treated diabetes mellitus (ITDM) from operating commercial motor vehicles (CMVs) in interstate commerce. The exemptions will enable these individuals to operate CMVs in interstate commerce.

DATES: The exemptions are effective April 24, 2013. The exemptions expire on April 24, 2015.

FOR FURTHER INFORMATION CONTACT: Elaine M. Papp, Chief, Medical Programs Division, (202) 366–4001, *fmcsamedical@dot.gov*, FMCSA, Room W64–224, Department of Transportation, 1200 New Jersey Avenue SE., Washington, DC 20590–0001. Office hours are from 8:30 a.m. to 5 p.m., Monday through Friday, except Federal holidays.

SUPPLEMENTARY INFORMATION:

Electronic Access

You may see all the comments online through the Federal Document Management System (FDMS) at: *http://www.regulations.gov*.

Docket: For access to the docket to read background documents or comments, go to *http://www.regulations.gov* and/or Room W12–140 on the ground level of the West Building, 1200 New Jersey Avenue SE., Washington, DC, between 9 a.m. and 5 p.m., Monday through Friday, except Federal holidays.

Privacy Act: Anyone may search the electronic form of all comments received into any of DOT's dockets by the name of the individual submitting the comment (or of the person signing the comment, if submitted on behalf of an association, business, labor union, or other entity). You may review DOT's Privacy Act Statement for the Federal Docket Management System (FDMS) published in the **Federal Register** on December 29, 2010 (75 FR 82132), or you may visit *http://www.gpo.gov/fdsys/pkg/FR-2010-12-29/pdf/2010-32876.pdf*.

Background

On March 5, 2013, FMCSA published a notice of receipt of Federal diabetes exemption applications from 25 individuals and requested comments from the public (78 FR 14406). The public comment period closed on April 4, 2013, and one comment was received.

FMCSA has evaluated the eligibility of the 25 applicants and determined that granting the exemptions to these individuals would achieve a level of safety equivalent to or greater than the level that would be achieved by complying with the current regulation 49 CFR 391.41(b)(3).

Diabetes Mellitus and Driving Experience of the Applicants

The Agency established the current requirement for diabetes in 1970 because several risk studies indicated that drivers with diabetes had a higher rate of crash involvement than the general population. The diabetes rule provides that ''A person is physically qualified to drive a commercial motor vehicle if that person has no established medical history or clinical diagnosis of diabetes mellitus currently requiring insulin for control'' (49 CFR 391.41(b)(3)).

FMCSA established its diabetes exemption program, based on the Agency's July 2000 study entitled ''A Report to Congress on the Feasibility of a Program to Qualify Individuals with Insulin-Treated Diabetes Mellitus to Operate in Interstate Commerce as Directed by the Transportation Act for the 21st Century.'' The report concluded that a safe and practicable protocol to allow some drivers with ITDM to operate CMVs is feasible. The September 3, 2003 (68 FR 52441), **Federal Register** notice in conjunction with the November 8, 2005 (70 FR 67777), **Federal Register** notice provides the current protocol for allowing such drivers to operate CMVs in interstate commerce.

These 25 applicants have had ITDM over a range of 1 to 29 years. These applicants report no severe hypoglycemic reactions resulting in loss of consciousness or seizure, requiring the assistance of another person, or resulting in impaired cognitive function that occurred without warning symptoms, in the past 12 months and no recurrent (2 or more) severe hypoglycemic episodes in the past 5 years. In each case, an endocrinologist verified that the driver has demonstrated a willingness to properly monitor and manage his/her diabetes mellitus, received education related to diabetes management, and is on a stable insulin regimen. These drivers report no other disqualifying conditions, including diabetes-related complications. Each meets the vision requirement at 49 CFR 391.41(b)(10).

The qualifications and medical condition of each applicant were stated and discussed in detail in the March 5, 2013, **Federal Register** notice and they will not be repeated in this notice.

Discussion of Comments

FMCSA received one comment in this proceeding. The comment is considered and discussed below.

The Pennsylvania Department of Transportation is in favor of granting an exemption to Scott A. Carlson after reviewing his driving history.

Basis for Exemption Determination

Under 49 U.S.C. 31136(e) and 31315, FMCSA may grant an exemption from the diabetes requirement in 49 CFR 391.41(b)(3) if the exemption is likely to achieve an equivalent or greater level of safety than would be achieved without the exemption. The exemption allows the applicants to operate CMVs in interstate commerce.

To evaluate the effect of these exemptions on safety, FMCSA considered medical reports about the applicants' ITDM and vision, and reviewed the treating endocrinologists' medical opinion related to the ability of the driver to safely operate a CMV while using insulin.

Consequently, FMCSA finds that in each case exempting these applicants from the diabetes requirement in 49 CFR 391.41(b)(3) is likely to achieve a level of safety equal to that existing without the exemption.

Conditions and Requirements

The terms and conditions of the exemption will be provided to the applicants in the exemption document and they include the following: (1) That each individual submit a quarterly monitoring checklist completed by the treating endocrinologist as well as an annual checklist with a comprehensive medical evaluation; (2) that each individual reports within 2 business days of occurrence, all episodes of severe hypoglycemia, significant complications, or inability to manage diabetes; also, any involvement in an accident or any other adverse event in a CMV or personal vehicle, whether or not it is related to an episode of hypoglycemia; (3) that each individual provide a copy of the ophthalmologist's or optometrist's report to the medical examiner at the time of the annual medical examination; and (4) that each individual provide a copy of the annual medical certification to the employer for retention in the driver's qualification file, or keep a copy in his/her driver's

qualification file if he/she is self-employed. The driver must also have a copy of the certification when driving, for presentation to a duly authorized Federal, State, or local enforcement official.

Conclusion

Based upon its evaluation of the 25 exemption applications, FMCSA exempts Christopher R. Anderson (MN), Brent T. Applebury (MO), Joseph A. Auchterlonie (NH), Brett D. Bertagnolli (IN), Brian T. Bofenkamp (WA), Scott A. Carlson (PA), Craig L. Falck (WI), John Fityere (NJ), Dana R. Griswold (VT), Ronald A. Heaps (OH), Martin A. Houts (IA), Michael T. Kraft (MN), Kris W. Lindsay (KS), Edward M. Lucynski (NJ), Wendell J. Matthews (MO), Patric L. Patten (NH), Darryl G. Rockwell (TX), John E. Ruth (IL), Greggory A. Smith (MO), Dwight E. Sory (CO), James M. Torklidson (WI), Terry R. Washa (NE), Alfred J. Williams (VA), Scott B. Wood (ND), and James L. Zore (IN) from the ITDM requirement in 49 CFR 391.41(b)(3), subject to the conditions listed under ''Conditions and Requirements'' above.

In accordance with 49 U.S.C. 31136(e) and 31315 each exemption will be valid for two years unless revoked earlier by FMCSA. The exemption will be revoked if the following occurs: (1) The person fails to comply with the terms and conditions of the 1/exemption; (2) the exemption has resulted in a lower level of safety than was maintained before it was granted; or (3) continuation of the exemption would not be consistent with the goals and objectives of 49 U.S.C. 31136(e) and 31315. If the exemption is still effective at the end of the 2-year period, the person may apply to FMCSA for a renewal under procedures in effect at that time.

Issued on: April 12, 2013.

Larry W. Minor,

Associate Administrator for Policy.

[FR Doc. 2013–09688 Filed 4–23–13; 8:45 am]

BILLING CODE 4910–EX–P

DEPARTMENT OF TRANSPORTATION

National Highway Traffic Safety Administration

Petition for Exemption From the Vehicle Theft Prevention Standard; Maserati North America Inc.

AGENCY: National Highway Traffic Safety Administration (NHTSA), Department of Transportation (DOT).

ACTION: Grant of petition for exemption.

SUMMARY: This document grants in full Maserati North America Inc.'s, (Maserati) petition for an exemption of the Quattroporte vehicle line in accordance with 49 CFR Part 543, *Exemption from the Theft Prevention Standard.* This petition is granted because the agency has determined that the antitheft device to be placed on the line as standard equipment is likely to be as effective in reducing and deterring motor vehicle theft as compliance with the parts-marking requirements of the Theft Prevention Standard (49 CFR Part 541).

DATES: The exemption granted by this notice is effective beginning with the 2014 model year (MY).

FOR FURTHER INFORMATION CONTACT: Ms. Carlita Ballard, Office of International Policy, Fuel Economy and Consumer Programs, NHTSA, W43–439, 1200 New Jersey Avenue SE., Washington, DC 20590. Ms. Ballard's phone number is (202) 366–5222. Her fax number is (202) 493–2990.

SUPPLEMENTARY INFORMATION: In a petition dated March 11, 2013, Maserati requested an exemption from the parts-marking requirements of the Theft Prevention Standard (49 CFR Part 541) for the MY 2014 Quattroporte vehicle line. The petition requested an exemption from parts-marking pursuant to 49 CFR Part 543, *Exemption from Vehicle Theft Prevention Standard,* based on the installation of an antitheft device as standard equipment for an entire vehicle line.

Under § 543.5(a), a manufacturer may petition NHTSA to grant an exemption for one vehicle line per model year. In its petition, Maserati provided a detailed description and diagram of the identity, design, and location of the components of the antitheft device for the Quattroporte vehicle line. Maserati stated that all of its vehicles will be equipped with a passive, Sentry Key Immobilizer System (SKIS), a Vehicle Alarm System (VTA) and a Keyless Ignition System as standard equipment beginning with the 2014 model year. Key components of its SKIS antitheft device will include an Engine Power Control Module (ECM), Fuel Delivery, Starter Motor Circuit, and a Shaft Lock Module. Maserati's keyless ignition system will consist of a Key Fob with Remote Keyless Entry (RKE) Transmitter, RFHub and Keyless Ignition Node (KIN). Maserati will provide its VTA system as standard equipment. The VTA will provide perimeter protection by monitoring the vehicle doors, ignition switch and deck lid. The VTA alarm system includes an ultrasonic sensor to defeat motion within the vehicle and has the ability to be armed without the intrusion sensor. Maserati stated that if unauthorized tampering with any of these protected areas is detected, the system will respond by pulsing the vehicle's horn/siren as an audible deterrent and flashing certain exterior lamps as a visual deterrent. Maserati's submission is considered a complete petition as required by 49 CFR 543.7, in that it meets the general requirements contained in § 543.5 and the specific content requirements of § 543.6.

Maserati stated that the immobilizer device is automatically armed when the ignition is changed from the run position to the off position. Once activated, only the use of a valid key can disable immobilization and allow the vehicle to run. Specifically, Maserati stated that the device is disarmed by performing an unlock actuation via the RKE transmitter or by starting the vehicle with a valid RFHub key. Maserati stated that to start the vehicle, the driver must press and hold the brake pedal while pressing the START/STOP button. The system takes over and engages the starter causing the starter motor to run and disengage automatically when the engine is running. Maserati stated that the RFHub contains and controls the SKIS preventing unauthorized use of the vehicle by preventing the engine from running more than 2 seconds unless a valid FOBIK key is used to start the engine. Maserati also stated that the vehicle's key fob with RKE transmitter, RFHub and the KIN contains over 50,000 possible electronic key combinations and allows the driver to operate the ignition switch with the push of a button as long as the RKE transmitter is in the passenger compartment.

In addressing the specific content requirements of 543.6, Maserati provided information on the reliability and durability of its proposed device. To ensure reliability and durability of the device, Maserati conducted tests based on its own specified standards. Maserati provided a detailed list of the tests conducted (i.e., temperature and humidity cycling, high and low temperature cycling, mechanical shock, random vibration, thermal stress/shock tests, material resistance tests, dry heat, dust and fluid ingress tests). Maserati also stated that the VTA, including the immobilizer device and its related components, must meet design and durability requirements for full vehicle useful life (10 years/120k miles). Maserati stated that it believes that its device is reliable and durable because it

complied with specified requirements for each test.

As an additional method of reliability and security, Maserati stated that a shaft lock module is also part of the SKIS. This unit is designed to work in conjunction with the RFHub module to control a locking bolt that engages any slot in the steering shaft to prevent shaft rotation whenever there is not a valid key present. The monitoring provisions for the shaft lock module are designed to resist unauthorized tampering. The module cannot be removed from the steering column while the lock bolt is in the locked position. The shaft lock module cannot be adjusted or repaired and if faulty or damaged, it must be replaced as an assembly.

Maserati stated that based on MY 2010 theft data published by NHTSA, its vehicles which have had antitheft and immobilizer systems installed have experienced extremely low to zero theft rates. Maserati also stated that because it had previously been a small vehicle manufacturer that produced and sold a low volume of vehicle units, its vehicles had been exempted from the parts-marking requirements. However, Maserati informed the agency that its immobilizer antitheft device has been equipped on its vehicles as standard equipment since MY 2007 and believes that its advanced technology antitheft devices are and will continue to be more effective in deterring vehicle theft than the parts-marking requirements. Theft rate data reported in **Federal Register** notices published by the agency show that the theft rate for the Quattroporte vehicle line, using an average of three MYs' data (2008–2010), is 0.6120, which is significantly lower than the median theft established by the agency. Maserati believes these low theft rates demonstrate the effectiveness of the immobilizer device.

Based on the supporting evidence submitted by Maserati on its device, the agency believes that the antitheft device for the Quattroporte vehicle line is likely to be as effective in reducing and deterring motor vehicle theft as compliance with the parts-marking requirements of the Theft Prevention Standard (49 CFR 541). The agency concludes that the device will provide the five types of performance listed in § 543.6(a)(3): promoting activation; attracting attention to the efforts of an unauthorized person to enter or move a vehicle by means other than a key; preventing defeat or circumvention of the device by unauthorized persons; preventing operation of the vehicle by unauthorized entrants; and ensuring the reliability and durability of the device.

Pursuant to 49 U.S.C. 33106 and 49 CFR 543.7(b), the agency grants a petition for exemption from the parts-marking requirements of Part 541 either in whole or in part, if it determines that, based upon substantial evidence, the standard equipment antitheft device is likely to be as effective in reducing and deterring motor vehicle theft as compliance with the parts-marking requirements of Part 541. The agency finds that Maserati has provided adequate reasons for its belief that the antitheft device for the Maserati Quattroporte vehicle line is likely to be as effective in reducing and deterring motor vehicle theft as compliance with the parts-marking requirements of the Theft Prevention Standard (49 CFR Part 541). This conclusion is based on the information Maserati provided about its device.

For the foregoing reasons, the agency hereby grants in full Maserati's petition for exemption for the Maserati Quattroporte vehicle line from the parts-marking requirements of 49 CFR Part 541. The agency notes that 49 CFR Part 541, Appendix A–1, identifies those lines that are exempted from the Theft Prevention Standard for a given model year. 49 CFR Part 543.7(f) contains publication requirements incident to the disposition of all Part 543 petitions. Advanced listing, including the release of future product nameplates, the beginning model year for which the petition is granted and a general description of the antitheft device is necessary in order to notify law enforcement agencies of new vehicle lines exempted from the parts-marking requirements of the Theft Prevention Standard.

If Maserati decides not to use the exemption for this line, it must formally notify the agency. If such a decision is made, the line must be fully marked according to the requirements under 49 CFR Parts 541.5 and 541.6 (marking of major component parts and replacement parts).

NHTSA notes that if Maserati wishes in the future to modify the device on which this exemption is based, the company may have to submit a petition to modify the exemption. Part 543.7(d) states that a Part 543 exemption applies only to vehicles that belong to a line exempted under this part and equipped with the antitheft device on which the line's exemption is based. Further, Part 543.9(c)(2) provides for the submission of petitions ''to modify an exemption to permit the use of an antitheft device similar to but differing from the one specified in that exemption.''

The agency wishes to minimize the administrative burden that Part 543.9(c)(2) could place on exempted vehicle manufacturers and itself. The agency did not intend in drafting Part 543 to require the submission of a modification petition for every change to the components or design of an antitheft device. The significance of many such changes could be *de minimis.* Therefore, NHTSA suggests that if the manufacturer contemplates making any changes, the effects of which might be characterized as *de minimis,* it should consult the agency before preparing and submitting a petition to modify.

Authority: 49 U.S.C. 33106; delegation of authority at 49 CFR 1.50.

Issued on: April 18, 2013.

Christopher J. Bonanti,

Associate Administrator for Rulemaking.

[FR Doc. 2013–09685 Filed 4–23–13; 8:45 am]

BILLING CODE 4910–59–P

DEPARTMENT OF TRANSPORTATION

Pipeline and Hazardous Materials Safety Administration

Actions on Special Permit Applications

AGENCY: Pipeline and Hazardous Materials Safety Administration (PHMSA), DOT.

ACTION: Notice of actions on Special Permit Applications.

SUMMARY: In accordance with the procedures governing the application for, and the processing of, special permits from the Department of Transportation's Hazardous Material Regulations (49 CFR Part 107, Subpart B), notice is hereby given of the actions on special permits applications in (March to March 2013). The mode of transportation involved are identified by a number in the ''Nature of Application'' portion of the table below as follows: 1—Motor vehicle, 2—Rail freight, 3—Cargo vessel, 4—Cargo aircraft only, 5—Passenger-carrying aircraft. Application numbers prefixed by the letters EE represent applications for Emergency Special Permits. It should be noted that some of the sections cited were those in effect at the time certain special permits were issued.

Issued in Washington, DC, on April 9, 2013.

Donald Burger,

Chief, Special Permits and Approvals Branch.

S.P No.	Applicant	Regulation(s)	Nature of special permit thereof
MODIFICATION SPECIAL PERMIT GRANTED			
14951–M	Hexagon Lincoln, Inc., Lincoln, NE.	49 CFR 173.302a	To modify the special permit to authorize an alternative fire protection system.
11624–M	Clean Harbors Environmental Services, Inc., Norwell, MA.	49 CFR 173.173(b)(2)	To modify the special permit to authorize an additional packaging.
14848–M	Corning Incorporated, Corning, NY.	49 CFR 172.202, 172.301, 172.400, 172.504 and 177.834(h).	To modify the special permit to authorize liquefied nitrogen without requiring shipping papers, labeling or placarding.
NEW SPECIAL PERMIT GRANTED			
15743–N	Midwest Cylinder, Inc., Cleves, OH.	49 CFR 180.211(c)(2)(i)	To authorize the repair of certain DOT 4L cylinders without requiring pressure testing. (mode 1).
15769–N	KMG Chemicals, Houston, TX	49 CFR 172.102 Table 2 IP2	To authorize the transportation of solid pentachlorophenol on flatbed trailers. (mode 1)
15773–N	Roche Molecular Systems, Inc., Branchburg, NJ.	49 CFR 173.242(e)(1)	To authorize the transportation in commerce of PG II corrosive materials described as Potassium Hydroxide Solution, UN 1814 and Sodium Hydroxide Solution, UN 1824 in a UN 50G Fiberboard Large Packaging. (modes 1, 2, 3)
15804–N	ThermoFisher Scientific, LLC, Pittsburgh, PA.	49 CFR 172.101, HMT Column (7), and 107.102 Special Provision N5.	To authorize the transportation in commerce of dry titanium powder in glass packaging. (modes 1, 2, 3)
EMERGENCY SPECIAL PERMIT GRANTED			
15428–M	National Aeronautics and Space Administration (NASA), Washington, DC.	49 CFR Part 172 and 173	To modify the special permit to authorize additional hazardous materials, add an additional transport fixture and add cargo vessel as a mode of transportation. (modes 1, 3)
15816–N	Air Transport International, LIttle Rock, AR.	49 CFR 172.101 Column (9B)	To authorize the one-time transportation in commerce of certain explosives that are forbidden for transportation by cargo only aircraft. (mode 4)
15819–N	Air Transport International, Little Rock, AR.	49 CFR 172.101 Column (9B)	To authorize the one-time transportation in commerce of certain explosives that are forbidden for transportation by cargo only aircraft. (mode 4)
15831–N	Space Exploration Technologies Corp., Hawthorne, CA.	49 CFR Part 172 and 173	To authorize the transportation in commerce of certain hazardous material as part of the Dragon space capsule without requiring shipping papers, marking and labeling. (modes 1, 3)
15835–N	Environment First, Inc., Jeffersonville, IN.	49 CFR 173.315	To authorize the one time transportation in commerce of a Division 2.2 material (1,1,1,2-Tetrafluorethane) in a non-DOT specification IMO Type 5 portable tank. (mode 1)
15840–N	Airgas USA, LLC Cheyenne, WY.	49 CFR 173.3(e)	To authorize the transportation in commerce of a DOT Specification 3AA cylinder containing anhydrous ammonia that developed a leak and is equipped with a Chlorine Institute Kit "A" to prevent leakage during transportation. (mode 1)
NEW SPECIAL PERMIT WITHDRAWN			
15808–N	U.S. Department of Defense (DOD), Scott AFB, IL.	49 CFR 171.22(e), 172.101 Column (9A), and 173.62.	To authorize the transportation of forbidden explosives by air. (modes 1, 2, 3, 4, 5)
15822–N	Thatcher Transportation, Inc., Salt Lake City, UT.	49 CFR 49 CFR Parts 106, 107 and 171–180..	To authorize self requalificaiton of chlorine ton containers. (mode 1)
DENIED			
15709–N	Request by Praxair Distribution, Inc. Danbury, CT March 14, 2013. To authorize the transportation in commerce of foreign manufactured cylinders that are not equipped with pressure relief devices.		
15728–N	Request by Brenner Tank LLC Fond du Lac, WI March 12, 2013. To authorize the manufacture, mark, sale, and use of non-DOT specification FRP cargo tanks conforming to specification DOT 407, DOT 412, or combination thereof.		

[FR Doc. 2013–09402 Filed 4–23–13; 8:45 am]
BILLING CODE 4910–60–M

DEPARTMENT OF TRANSPORTATION

Pipeline and Hazardous Materials Safety Administration

Notice of Applications for Modification of Special Permits

AGENCY: Pipeline and Hazardous Materials Safety Administration (PHMSA), DOT.

ACTION: List of Applications for Modification of Special Permits.

SUMMARY: In accordance with the procedures governing the application for, and the processing of, special permits from the Department of Transportation's Hazardous Material Regulations (49 CFR Part 107, Subpart B), notice is hereby given that the Office of Hazardous Materials Safety has received the applications described herein. This notice is abbreviated to expedite docketing and public notice. Because the sections affected, modes of transportation, and the nature of application have been shown in earlier **Federal Register** publications, they are not repeated here. Requests for modification of special permits (e.g. to provide for additional hazardous materials, packaging design changes, additional mode of transportation, etc.) are described in footnotes to the application number. Application numbers with the suffix ''M'' denote a modification request. These applications have been separated from the new application for special permits to facilitate processing.

DATES: Comments must be received on or before May 9, 2013.

Address Comments to: Record Center, Pipeline and Hazardous Materials Safety Administration, U.S. Department of Transportation, Washington, DC 20590.

Comments should refer to the application number and be submitted in triplicate. If confirmation of receipt of comments is desired, include a self-addressed stamped postcard showing the special permit number.

FOR FURTHER INFORMATION CONTACT: Copies of the applications are available for inspection in the Records Center, East Building, PHH–30, 1200 New Jersey Avenue Southeast, Washington DC or at *http://regulations.gov.*

This notice of receipt of applications for modification of special permit is published in accordance with Part 107 of the Federal hazardous materials transportation law (49 U.S.C. 5117(b); 49 CFR 1.53(b)).

Issued in Washington, DC, on April 9, 2013.

Donald Burger,

Chief, General Approvals and Permits.

MODIFICATION SPECIAL PERMITS

Application No.	Docket No.	Applicant	Regulation(s) affected	Nature of special permit thereof
9847–M		FIBA Technologies, Inc., Millbury, MA.	49 CFR 180.209(a), 180.205(c), (f), (g), and (i); 173.302a (b) (2), (3), (4), and (5); and 180.213.	To modify the special permit so that the neck thread requirements in paragraph 7.b.(2) are consistant with CGA Pamphlet C–23.
10922–M		FIBA Technologies, Inc., Millbury, MA.	49 CFR 172.301a and 180.205	To modify the special permit so that the neck thread requirements in paragraph 7.k. are consistant with CGA Pamphlet C–23.
11952–M		U.S. Department of Defense, Scott AFB, IL.	49 CFR 173.306(a)	To modify the special permit to authorize a greater maximum weight limit when up to eight metal containers are transported.
13544–M		Carlson Logistics Inc., Sacramento, CA.	49 CFR 172.301(a), 172.301(c), and 172.401.	To modify the special permit to authorize that the cylinders be transported on a flat bed, not enclosed and, platform type trailers that are placarded.
14149–M		Digital Wave Corporation, Centennial, CO.	49 CFR 172.203(a), 172.301(c), and 180.205.	To modify the special permit to authorize ultrasonic equipment with a five sensor head with sensors positioned to perform all required straight and angle beam examinations in a single pass.
14206–M		Digital Wave Corporation, Centennial, CO.	49 CFR 172.203(a), 172.301(c), and 180.205.	To modify the special permit to authorize ultrasonic equipment with a five sensor head with sensors positioned to perform all required straight and angle beam examinations in a single pass.
14453–M		FIBA Technologies, Inc., Millbury, MA.	49 CFR 180.209	To modify the special permit so that the neck thread requirements in paragraph 7.b.(1) are consistant with CGA Pamphlet C–23.
14546–M		Linde Gas North America LLC, Murray Hill, NJ.	49 CFR 180.209	To modify the special permit to authorize an extened requalification for cylinders referenced in DOT–SP 12440.
14661–M		FIBA Technologies, Inc., Millbury, MA.	49 CFR 180.209(a) and 180.209(b)	To modify the special permit to authorize new corrosion requirements to be consistant with CGA Pamphlet C–23 and require neck thread requirements to be consistant with CGA Pamphlet C–23.
15028–M		Roeder Cartage Company, Inc., Lima, OH.	49 CFR 180.407(c), (e), and (f)	To modify the special permit to authorize a DOT specification 407 trailer.

MODIFICATION SPECIAL PERMITS—Continued

Application No.	Docket No.	Applicant	Regulation(s) affected	Nature of special permit thereof
15577–M		Olin Corporation, Oxford, MS.	49 CFR 172.101 column 8, 173.62 (b), 173.60(b)(8), 172.300 (d).	To modify the special permit to authorize a contract carrier.

[FR Doc. 2013–09401 Filed 4–23–13; 8:45 am]

BILLING CODE 4909–60–M

DEPARTMENT OF TRANSPORTATION

Pipeline and Hazardous Materials Safety Administration

Notice of Application for Special Permits

AGENCY: Pipeline and Hazardous Materials Safety Administration (PHMSA), DOT.

ACTION: List of Applications for Special Permits.

SUMMARY: In accordance with the procedures governing the application for, and the processing of, special permits from the Department of Transportation's Hazardous Material Regulations (49 CFR Part 107, Subpart B), notice is hereby given that the Office of Hazardous Materials Safety has received the application described herein. Each mode of transportation for which a particular special permit is requested is indicated by a number in the ''Nature of Application'' portion of the table below as follows: 1—Motor vehicle, 2—Rail freight, 3—Cargo vessel, 4—Cargo aircraft only, 5—Passenger-carrying aircraft.

DATES: Comments must be received on or before May 24, 2013.

Address Comments to: Record Center, Pipeline and Hazardous Materials Safety Administration, U.S. Department of Transportation, Washington, DC 20590.

Comments should refer to the application number and be submitted in triplicate. If confirmation of receipt of comments is desired, include a self-addressed stamped postcard showing the special permit number.

FOR FURTHER INFORMATION CONTACT: Copies of the applications are available for inspection in the Records Center, East Building, PHH–30, 1200 New Jersey Avenue Southeast, Washington DC or at *http://regulations.gov.*

This notice of receipt of applications for special permit is published in accordance with Part 107 of the Federal hazardous materials transportation law (49 U.S.C. 5117(b); 49 CFR 1.53(b)).

Issued in Washington, DC, on April 16, 2013.

Donald Burger,

Chief, General Approvals an Permits.

NEW SPECIAL PERMITS

Application No.	Docket No.	Applicant	Regulation(s) affected	Nature of special permits thereof
15837–N		Department of Defense, Scotts AFB, IL.	49 CFR 173.304a	To authorize the transportation in commerce of a Submarine High Data Rate (HDR)/Advanced Communications Mast (ACM) configured with a non-DOT specification pressure vessel containing anhydrous ammonia. (modes 1, 2, 3, 4)
15838–N		Primo Water, Winston-Salem, NC.	49 CFR 171.2(k)	To authorize the Corporation transportation in commerce of certain used cylinders that contain CO2, but not necessarily in an amount qualifying as hazardous material. (modes 1, 2, 3, 4)
15839–N		Sensors, Inc., Saline, MI.	49 CFR 172.202, 172.301, 172.400 and 177.834(h).	To authorize the discharge of a Division 2.1 material from an authorized DOT specification cylinder without removing the cylinder from the vehicle on which it is transported. (mode 1)
15847–N		Safariland, LLC, Jacksonville, FL.	49 CFR 173.4a	To authorize the transportation in commerce of Nitric acid up to 65% as an excepted quantity by cargo aircraft only. (modes 1,4)
15848–N		Ambri, Inc. , Cambridge, MA.	49 CFR 173.222(c)(1)	To authorize the transportation in commerce of Dangerous Goods in Equipment containing a lithium battery that exceeds the net quantity weight restriction when transported by motor vehicle and rail freight. (modes 1, 2)

[FR Doc. 2013–09399 Filed 4–23–13; 8:45 am]
BILLING CODE 4909–60–M

DEPARTMENT OF TRANSPORTATION

Pipeline and Hazardous Materials Safety Administration

List of Special Permit Applications Delayed

AGENCY: Pipeline and Hazardous Materials Safety Administration (PHMSA), DOT.

ACTION: List of Applications Delayed more than 180 days.

SUMMARY: In accordance with the requirements of 49 U.S.C. 5117(c), PHMSA is publishing the following list of special permit applications that have been in process for 180 days or more. The reason(s) for delay and the expected completion date for action on each application is provided in association with each identified application.

FOR FURTHER INFORMATION CONTACT: Ryan Paquet, Director, Office of Hazardous Materials Special Permits and Approvals, Pipeline and Hazardous Materials Safety Administration, U.S. Department of Transportation, East Building, PHH–30, 1200 New Jersey Avenue Southeast, Washington, DC 20590–0001, (202) 366–4535.

Key to "Reason for Delay"

1. Awaiting additional information from applicant
2. Extensive public comment under review
3. Application is technically complex and is of significant impact or precedent-setting and requires extensive analysis.
4. Staff review delayed by other priority issues or volume of special permit applications.

Meaning of Application Number Suffixes

N—New application
M—Modification request
R—Renewal Request
P—Party to Exemption Request

Issued in Washington, DC, on April 9, 2013.

Donald Burger,
Chief, General Approvals and Permits.

Application No.	Applicant	Reason for delay	Estimated date of completion
New Special Permit Applications			
15650–N	JL Shepherd & Associates, San Fernando, CA	3	05–31–2013
15720–N	Digital Wave Corporation, Centennial, CO	3,1	05–31–2013
15725–N	Toray Composites (America), Tacoma, WA	4	05–31–2013
15727–N	Blackhawk Helicopters, El Cajon, CA	4	05–31–2013
Renewal Special Permits Applications			
14455–R	EnergySolutions, LLC, Columbia, SC	3	04–30–2013
14832–R	Trinity Industries, Inc., Dallas, TX	3	05–31–2013
15228–R	FedEx Express, Memphis, TN	3	05–31–2013

[FR Doc. 2013–09400 Filed 4–23–13; 8:45 am]
BILLING CODE 4910–60–M

DEPARTMENT OF TRANSPORTATION

Surface Transportation Board

[Docket No. FD 35724]

California High-Speed Rail Authority—Construction Exemption—in Merced, Madera and Fresno Counties, Cal

On March 27, 2013, California High-Speed Rail Authority (Authority), a noncarrier state agency, filed a petition for exemption (Petition) under 49 U.S.C. 10502 from the prior approval requirements of 49 U.S.C. 10901 to construct an approximately 65-mile dedicated high-speed passenger rail line between Merced and Fresno, California (the Project). Concurrently, the Authority filed a motion to dismiss the Petition for lack of jurisdiction (Motion to Dismiss), asserting that the Project does not require Board approval under 49 U.S.C. 10901 because it will be located entirely within California, will provide only intrastate passenger rail service, and will not be constructed or operated "as part of the interstate rail network" under 49 U.S.C. 10501(a)(2)(A).

The Project is one section of the planned California High-Speed Train System (HST). Also referred to as the Merced to Fresno HST Section,[1] the Project would be the first of nine sections of the HST, which, when complete, would provide intercity passenger rail service at speeds up to 220 miles per hour over more than 800 miles of rail line, primarily between San Diego and San Francisco.[2] The Authority intends to construct the Project in segments and plans to award contracts for the final design and construction of the first 29-mile portion of the approximately 65-mile line in the Project in the spring or summer of 2013.[3] For that reason, the Authority requests expedited consideration of the Petition and Motion to Dismiss and a decision effective by June 17, 2013.

To date, the Board has received comments from Federal, state and local elected officials, residents, landowners, water districts, school districts, grassroots organizations, and other interested parties. Several of those parties have requested an extension of the 20-day period for replies under 49 CFR 1104.13(a). On April 11, 2013, the Authority responded that it would have no objection to a 15-day extension of the deadline for filing replies to the Motion to Dismiss and Petition (to May 1) but would object to a longer extension.[4] By decision served April 15, 2013, the Board instituted a proceeding and tolled the period for filing responses to the Petition and the Motion to Dismiss pending further Board order.

Motion to Dismiss. The record currently before the Board, along with other publicly available materials, provides sufficient information for the Board to conclude that it has jurisdiction over construction of the California HST system, including the Project. Therefore, replies to the Motion to Dismiss are unnecessary, and the Motion to Dismiss will be denied. The Board will set forth its reasons for

[1] Pet. 2.

[2] Pet. 3. The entire HST system will connect the major population centers of Sacramento, the San Francisco Bay Area, the Central Valley, Los Angeles, the Inland Empire, Orange County, and San Diego. *Id.*

[3] Pet. 4, 13–14.

[4] Authority Reply 3–4.

denying the Motion to Dismiss in its subsequent decision on the merits.

Replies to the Petition for Exemption. Given the significant interest in public participation in this proceeding, the period for replies to the Petition will be extended to May 8, 2013, to permit sufficient time for interested persons to prepare and file responses. The Board will determine whether the exemption criteria under 49 U.S.C. 10502(a) are satisfied after reviewing the public comments.

This action will not significantly affect either the quality of the human environment or the conservation of energy resources.

It is ordered:

1. The Authority's Motion to Dismiss is denied.
2. Replies to the Petition are due by May 8, 2013.
3. This decision will be published in the **Federal Register**.
4. This decision is effective on its service date.

By the Board, Chairman Elliott, Vice Chairman Begeman, and Commissioner Mulvey. Vice Chairman Begeman concurred in part and dissented in part.

Vice Chairman Begeman, concurring in part and dissenting in part:

I agree that sufficient information exists about the proposed California High-Speed Train System (HST) to conclude that the Board has jurisdiction over it, based largely on the publicly available information that I have been reviewing since the Petition and Motion to Dismiss were filed last month. But that is where my agreement with this decision ends.

The Board's finding of jurisdiction should be accompanied by a rationale to support that finding, instead of waiting to disclose it in a subsequent decision, which could be weeks, if not months, from today. Such an approach is rare by this agency and is one that I cannot support here, not only because it is important for the California High-Speed Rail Authority to know the reasons we reached this finding, but also to inform other States that are planning high-speed rail projects so they can ensure full compliance with our regulations, as appropriate.

Further, I believe that if we have enough information to conclude that we have jurisdiction over this matter, we also have enough information to determine whether it falls within the statutory exemption criteria under 49 U.S.C. 10502. In my view, continued regulation by the Board is necessary here to carry out the rail transportation policy of 49 U.S.C. 10101, and a project of this size and magnitude in terms of cost and miles—estimated at over $68 billion and 800 miles of rail line—is not one of ''limited scope.'' We should direct the Authority to file an application so that the Board can fully review and analyze the proposal. The scope of the project and significant interest in public participation, which this decision itself recognizes, mandates it.

I can appreciate the Board's desire to meet the Authority's request for expedited consideration, and it is unfortunate that the Authority didn't come to the Board in a more timely manner than it did. But the Authority's own deadline should not come at the expense of a full and thorough review by the Board.

Derrick A. Gardner,

Clearance Clerk.

[FR Doc. 2013–09682 Filed 4–23–13; 8:45 am]

BILLING CODE 4915–01–P

DEPARTMENT OF THE TREASURY

Study and Report to Congress on Natural Catastrophes and Insurance

AGENCY: Federal Insurance Office, Department of the Treasury.

ACTION: Notice; request for comment; call for papers.

SUMMARY: Section 100247 of the Biggert-Waters Flood Insurance Reform Act of 2012 (the ''Biggert-Waters Act'' or ''Act'') requires the Director of the Federal Insurance Office (''FIO''), an office within the Department of the Treasury (''Treasury''), to conduct a study and submit a report to Congress on the current state of the market for natural catastrophe insurance in the United States.[1]

In conducting the study and issuing the report, the Director shall consult with the National Academy of Sciences, State insurance regulators, consumer organizations, representatives of the insurance and reinsurance industry, policyholders, and other organizations and experts, as appropriate. Treasury issues this notice to elicit comment from these persons, groups, and the public, to assist FIO with the study and the report.

DATES: Comments must be received on or before June 24, 2013.

Papers submitted for consideration in the study must be received by June 24, 2013.

ADDRESSES: Please submit comments and papers electronically through the Federal eRulemaking Portal: *http://www.regulations.gov,* or by mail (if hard copy, preferably an original and two copies) to the Federal Insurance Office, Attention: Study on Natural Catastrophes and Insurance, Room 1319 MT, Department of the Treasury, 1500 Pennsylvania Avenue NW., Washington, DC 20220. As postal mail may be subject to processing delay, it is recommended that comments and papers be submitted electronically. All comments should be captioned with ''Study on Natural Catastrophes and Insurance.'' Please include your name, group affiliation, if any, address, email address, and telephone number(s) in your comment.

In general, comments received will be posted on *http://www.regulations.gov* without change, including any business or personal information provided. Comments received, including attachments and other supporting materials, will be part of the public record and subject to public disclosure. Do not enclose any information in your comment or supporting materials that you consider confidential or inappropriate for public disclosure.

All comments and papers received will be available for public inspection by appointment only at the Reading Room of the Treasury Library. To make an appointment, please call the Treasury Library at 202–622–0990.

FOR FURTHER INFORMATION CONTACT: Matthew A. McKenney, Federal Insurance Office, 202–622–5330 (not a toll free number).

SUPPLEMENTARY INFORMATION:

I. Background

The National Flood Insurance Program (NFIP) was created in 1968. On July 6, 2012, President Obama signed into law the Biggert-Waters Act, which modified certain aspects of the NFIP and extended that program through September 30, 2017.[2] The Act requires the Director of the FIO to conduct a study and submit to the Committee on Banking, Housing, and Urban Affairs of the Senate and the Committee on Financial Services of the House of Representatives a report (the Report) ''providing an assessment of the current state of the market for natural catastrophe insurance in the United States.''[3]

In addition, the FIO Director must consult with the National Academy of Sciences, State insurance regulators, consumer organizations, representatives of the insurance and reinsurance industry, policyholders, and other organizations and experts, as appropriate.[4] This Notice seeks

[1] Public Law 112–141, § 100247, 126 Stat. 916, 967–68 (2012).

[2] 42 U.S.C. 4026.

[3] 126 Stat. 916, 967 (2012).

[4] 126 Stat. 916, 968 (2012).

comments from these and other interested parties and the public in support of the Report.

II. General Solicitation for Comments

The FIO hereby solicits comments, including supporting and illustrative information in support of such comments where appropriate and available, regarding natural catastrophes and the current state of the market for insurance for natural catastrophe perils in the United States.

III. Solicitation for Specific Comments

Please comment on the following considerations: [5]

1. The current condition of, as well as the outlook for, the availability and affordability of insurance for natural catastrophe perils in all regions of the United States, including whether a consensus definition of a ''natural catastrophe'' should be established and, if so, the terms of that definition;

2. The current ability of States, communities, and individuals to mitigate their natural catastrophe risks, including the affordability and feasibility of such mitigation activities;

a. The current and potential future effects of land use policies and building codes on the costs of natural catastrophes in the United States;

b. The percentage of residential properties that are insured for earthquake or flood damage in high-risk geographic areas of the United States, and the reasons why many such properties lack insurance coverage;

c. The role of insurers in providing incentives for risk mitigation efforts;

3. The current state of catastrophic insurance and reinsurance markets and the current approaches in providing insurance protection to different sectors of the population of the United States;

4. The current financial condition of State residual markets and catastrophe funds in high-risk regions, including the likelihood of insolvency following a natural catastrophe, the concentration of risks within such funds, the reliance on postevent assessments and State funding, and the adequacy of rates;

5. The current role of the Federal Government and State and local governments in providing incentives for feasible risk mitigation efforts and the cost of providing post-natural catastrophe aid in the absence of insurance;

6. Current approaches to insuring natural catastrophe risks in the United States;

a. Current and potential future Federal, State, and regional partnerships that support private, direct insurance coverage;

b. The potential privatization of flood insurance in the United States; and,

7. Such other information that may be necessary or appropriate for the Report.

IV. Call for Papers

The FIO also calls for the submission of papers containing empirical or non-empirical analyses or evaluations of natural catastrophes and the current state of the market for insurance for natural catastrophe perils in the United States. The FIO seeks papers either recently completed or those that will be completed prior to close of the Report. We encourage contributions by researchers from academia, States and State agencies, business organizations, insurance trade and professional associations, research consulting firms, and other organizations and experts. Possible topics may include but are not limited to topics that may be addressed in the Report.

Michael T. McRaith,

Director, Federal Insurance Office.

[FR Doc. 2013–09670 Filed 4–23–13; 8:45 am]

BILLING CODE 4810–25–P

[5] 126 Stat. 916, 967 (2012).

DEPARTMENT OF THE TREASURY

Internal Revenue Service

Proposed Collection; Comment Request for Regulation Project

AGENCY: Internal Revenue Service (IRS), Treasury.

ACTION: Notice and request for comments.

SUMMARY: The Department of the Treasury, as part of its continuing effort to reduce paperwork and respondent burden, invites the general public and other Federal agencies to take this opportunity to comment on proposed and/or continuing information collections, as required by the Paperwork Reduction Act of 1995, Public Law 104–13(44 U.S.C. 3506(c)(2)(A)). Currently, the IRS is soliciting comments concerning, Election Out of Subchapter K for Producers of Natural Gas.

DATES: Written comments should be received on or before June 24, 2013 to be assured of consideration.

ADDRESSES: Direct all written comments to Yvette Lawrence, Internal Revenue Service, Room 6129, 1111 Constitution Avenue NW., Washington, DC 20224.

FOR FURTHER INFORMATION CONTACT: Requests for additional information or copies of the regulations should be directed to Martha R. Brinson at Internal Revenue Service, Room 6129, 1111 Constitution Avenue NW., Washington, DC 20224, or at (202)622–3869, or through the Internet at *Martha.R.Brinson@irs.gov*.

SUPPLEMENTARY INFORMATION:

Title: Election Out of Subchapter K for Producers of Natural Gas.

OMB Number: 1545–1338.

Regulation Project Number: T.D. 8578

Abstract: This regulation contains certain requirements that must be met by co-producers of natural gas subject to a joint operating agreement in order to elect out of subchapter K of chapter 1 of the Internal Revenue Code. Under regulation section 1.761–2(d)(5)(i), gas producers subject to gas balancing agreements must file Form 3115 and certain additional information to obtain the Commissioner's consent to a change in method of accounting to either of the two permissible accounting methods described in the regulations.

Current Actions: There is no change to this existing regulation.

Type of Review: Extension of a currently approved collection.

Affected Public: Individuals or households, and business or other for-profit organizations.

Estimated Number of Respondents: 10.

Estimated Time per Respondent: 30 minutes.

Estimated Total Annual Burden Hours: 5.

The following paragraph applies to all of the collections of information covered by this notice:

An agency may not conduct or sponsor, and a person is not required to respond to, a collection of information unless the collection of information displays a valid OMB control number.

Books or records relating to a collection of information must be retained as long as their contents may become material in the administration of any internal revenue law. Generally, tax returns and tax return information are confidential, as required by 26 U.S.C. 6103.

Request for Comments: Comments submitted in response to this notice will be summarized and/or included in the request for OMB approval. All comments will become a matter of public record. Comments are invited on: (a) Whether the collection of information is necessary for the proper performance of the functions of the agency, including whether the information shall have practical utility; (b) the accuracy of the agency's estimate of the burden of the collection of information; (c) ways to enhance the

quality, utility, and clarity of the information to be collected; (d) ways to minimize the burden of the collection of information on respondents, including through the use of automated collection techniques or other forms of information technology; and (e) estimates of capital or start-up costs and costs of operation, maintenance, and purchase of services to provide information.

Approved: April 5, 2013.

Yvette Lawrence,

IRS Reports Clearance Officer.

[FR Doc. 2013–09586 Filed 4–23–13; 8:45 am]

BILLING CODE 4830–01–P

DEPARTMENT OF THE TREASURY

Internal Revenue Service

Proposed Collection; Comment Request for Form 5308

AGENCY: Internal Revenue Service (IRS), Treasury.

ACTION: Notice and request for comments.

SUMMARY: The Department of the Treasury, as part of its continuing effort to reduce paperwork and respondent burden, invites the general public and other Federal agencies to take this opportunity to comment on proposed and/or continuing information collections, as required by the Paperwork Reduction Act of 1995, Public Law 104–13 (44 U.S.C. 3506(c)(2)(A)). Currently, the IRS is soliciting comments concerning Form 5308, Request for Change in Plan/Trust Year.

DATES: Written comments should be received on or before June 24, 2013 to be assured of consideration.

ADDRESSES: Direct all written comments to Yvette Lawrence, Internal Revenue Service, Room 6129, 1111 Constitution Avenue NW., Washington, DC 20224.

FOR FURTHER INFORMATION CONTACT: Requests for additional information or copies of the form and instructions should be directed to Martha R. Brinson at Internal Revenue Service, Room 6129, 1111 Constitution Avenue NW., Washington, DC 20224, or at (202) 622–3869, or through the Internet at *Martha.R.Brinson@irs.gov*.

SUPPLEMENTARY INFORMATION:

Title: Request for Change in Plan/Trust Year.

OMB Number: 1545–0201.

Form Number: 5308.

Abstract: Form 5308 is used to request permission to change the plan or trust year for a pension benefit plan. The information submitted is used in determining whether IRS should grant permission for the change.

Current Actions: There are no changes being made to the form at this time.

Type of Review: Extension of a currently approved collection.

Affected Public: Business or other for-profit organizations.

Estimated Number of Respondents: 480.

Estimated Time per Respondent: 42 minutes.

Estimated Total Annual Burden Hours: 339.

The following paragraph applies to all of the collections of information covered by this notice:

An agency may not conduct or sponsor, and a person is not required to respond to, a collection of information unless the collection of information displays a valid OMB control number. Books or records relating to a collection of information must be retained as long as their contents may become material in the administration of any internal revenue law. Generally, tax returns and tax return information are confidential, as required by 26 U.S.C. 6103.

Request for Comments: Comments submitted in response to this notice will be summarized and/or included in the request for OMB approval. All comments will become a matter of public record. Comments are invited on: (a) Whether the collection of information is necessary for the proper performance of the functions of the agency, including whether the information shall have practical utility; (b) the accuracy of the agency's estimate of the burden of the collection of information; (c) ways to enhance the quality, utility, and clarity of the information to be collected; (d) ways to minimize the burden of the collection of information on respondents, including through the use of automated collection techniques or other forms of information technology; and (e) estimates of capital or start-up costs and costs of operation, maintenance, and purchase of services to provide information.

Approved: April 5, 2013.

Yvette Lawrence,

IRS Reports Clearance Officer.

[FR Doc. 2013–09591 Filed 4–23–13; 8:45 am]

BILLING CODE 4830–01–P

DEPARTMENT OF THE TREASURY

Internal Revenue Service

Proposed Collection; Comment Request for Regulation Project

AGENCY: Internal Revenue Service (IRS), Treasury.

ACTION: Notice and request for comments.

SUMMARY: The Department of the Treasury, as part of its continuing effort to reduce paperwork and respondent burden, invites the general public and other Federal agencies to take this opportunity to comment on proposed and/or continuing information collections, as required by the Paperwork Reduction Act of 1995, Public Law 104–13 (44 U.S.C. 3506(c)(2)(A)). Currently, the IRS is soliciting comments concerning, Changes in Accounting Periods.

DATES: Written comments should be received on or before June 24, 2013 to be assured of consideration.

ADDRESSES: Direct all written comments to Yvette Lawrence, Internal Revenue Service, Room 6129, 1111 Constitution Avenue NW., Washington, DC 20224.

FOR FURTHER INFORMATION CONTACT: Requests for additional information or copies of the regulation should be directed to Martha R. Brinson at Internal Revenue Service, Room 6129, 1111 Constitution Avenue NW., Washington, DC 20224, or at (202) 622–3869, or through the Internet at *Martha.R.Brinson@irs.gov*.

SUPPLEMENTARY INFORMATION:

Title: Changes in Accounting Periods.

OMB Number: 1545–1748.

Regulation Project Number: TD 8996.

Abstract: Section 1.441–2(b)(1) requires certain taxpayers to file statements on their federal income tax returns to notify the Commissioner of the taxpayers' election to adopt a 52–53-week taxable year. Section 1.442–1(b)(4) provides that certain taxpayers must establish books and records that clearly reflect income for the short period involved when changing their taxable year to a fiscal taxable year. Section 1.442–1(d) requires a newly married husband or wife to file a statement with their short period return when changing to the other spouse's taxable year.

Current Actions: There is no change to this existing regulation.

Type of Review: Extension of a currently approved collection.

Affected Public: Business or other for-profit organizations, and Individuals or households.

Estimated Number of Respondents: 1,000.

Estimated Time per Respondent: 30 minutes.

Estimated Total Annual Burden Hours: 500.

The following paragraph applies to all of the collections of information covered by this notice:

An agency may not conduct or sponsor, and a person is not required to

respond to, a collection of information unless the collection of information displays a valid OMB control number. Books or records relating to a collection of information must be retained as long as their contents may become material in the administration of any internal revenue law. Generally, tax returns and tax return information are confidential, as required by 26 U.S.C. 6103.

Request for Comments: Comments submitted in response to this notice will be summarized and/or included in the request for OMB approval. All comments will become a matter of public record. Comments are invited on: (a) Whether the collection of information is necessary for the proper performance of the functions of the agency, including whether the information shall have practical utility; (b) the accuracy of the agency's estimate of the burden of the collection of information; (c) ways to enhance the quality, utility, and clarity of the information to be collected; (d) ways to minimize the burden of the collection of information on respondents, including through the use of automated collection techniques or other forms of information technology; and (e) estimates of capital or start-up costs and costs of operation, maintenance, and purchase of services to provide information.

Approved: April 5, 2013.

Yvette Lawrence,

IRS Reports Clearance Officer.

[FR Doc. 2013–09590 Filed 4–23–13; 8:45 am]

BILLING CODE 4830–01–P

DEPARTMENT OF THE TREASURY

Internal Revenue Service

Proposed Collection; Comment Request for Tip Reporting Alternative Commitment Agreement (TRAC) For Use in Industries Other Than the Food and Beverage Industry and The Cosmetology and Barber Industry

AGENCY: Internal Revenue Service (IRS), Treasury.

ACTION: Notice and request for comments.

SUMMARY: The Department of the Treasury, as part of its continuing effort to reduce paperwork and respondent burden, invites the general public and other Federal agencies to take this opportunity to comment on proposed and/or continuing information collections, as required by the Paperwork Reduction Act of 1995, Public Law 104–13 (44 U.S.C. 3506(c)(2)(A)). Currently, the IRS is soliciting comments concerning Tip Reporting Alternative Commitment Agreement (TRAC) For Use in Industries Other than the Food and Beverage Industry and The Cosmetology and Barber Industry.

DATES: Written comments should be received on or before June 24, 2013 to be assured of consideration.

ADDRESSES: Direct all written comments to Yvette Lawrence, Internal Revenue Service, room 6129, 1111 Constitution Avenue NW., Washington, DC 20224.

FOR FURTHER INFORMATION CONTACT: Requests for additional information or copies of the information collection should be directed to Allan Hopkins at Internal Revenue Service, room 6129, 1111 Constitution Avenue NW., Washington, DC 20224, or at (202) 622–6665, or through the internet at *Allan.M.Hopkins@irs.gov.*

SUPPLEMENTARY INFORMATION:

Title: Tip Reporting Alternative Commitment Agreement (TRAC) For Use in Industries Other than the Food and Beverage Industry and The Cosmetology and Barber Industry.

OMB Number: 1545–1714.

Abstract: Announcement 2000–19, 2000–19 I.R.B. 973, and Announcement 2001–1, #2001–2 I.R.B. p.277 contain information required by the Internal Revenue Service, in its tax compliance efforts to assist employers and their employees in understanding and complying with Internal Revenue Code section 6053(a), which requires employees to report all their tips monthly to their employers.

Current Actions: There is no change to this existing information collection.

Type of Review: Extension of a currently approved collection.

Affected Public: Business or other for-profit organizations.

Estimated Number of Respondents and/or Recordkeeping: 300.

Estimated Average Time per Respondent/Recordkeeper: 16 hr., 16 min.

Estimated Total Annual Reporting and/or Recordkeeping Burden Hours: 4,877.

The following paragraph applies to all of the collections of information covered by this notice:

An agency may not conduct or sponsor, and a person is not required to respond to, a collection of information unless the collection of information displays a valid OMB control number. Books or records relating to a collection of information must be retained as long as their contents may become material in the administration of any internal revenue law. Generally, tax returns and tax return information are confidential, as required by 26 U.S.C. 6103.

Request for Comments: Comments submitted in response to this notice will be summarized and/or included in the request for OMB approval. All comments will become a matter of public record. Comments are invited on: (a) Whether the collection of information is necessary for the proper performance of the functions of the agency, including whether the information shall have practical utility; (b) the accuracy of the agency's estimate of the burden of the collection of information; (c) ways to enhance the quality, utility, and clarity of the information to be collected; (d) ways to minimize the burden of the collection of information on respondents, including through the use of automated collection techniques or other forms of information technology; and (e) estimates of capital or start-up costs and costs of operation, maintenance, and purchase of services to provide information.

Approved: April 18, 2013.

Allan Hopkins,

Tax Analyst.

[FR Doc. 2013–09680 Filed 4–23–13; 8:45 am]

BILLING CODE 4830–01–P

FEDERAL REGISTER

Vol. 78 Wednesday,

No. 79 April 24, 2013

Part II

The President

Presidential Determination No. 2013–8 of April 11, 2013—Drawdown Pursuant to Section 552(c)(2) of the Foreign Assistance Act of 1961 of up to $10 Million in Commodities and Services From Any Agency of the United States Government to the Syrian Opposition Coalition (SOC) and the Syrian Opposition's Supreme Military Council (SMC)

Proclamation 8959—National Crime Victims' Rights Week, 2013

Proclamation 8960—National Volunteer Week, 2013

Proclamation 8961—National Park Week, 2013

Proclamation 8962—Earth Day, 2013

Federal Register
Vol. 78, No. 79
Wednesday, April 24, 2013

Presidential Documents

Title 3—

The President

Presidential Determination No. 2013–8 of April 11, 2013

Drawdown Pursuant to Section 552(c)(2) of the Foreign Assistance Act of 1961 of up to $10 Million in Commodities and Services From Any Agency of the United States Government to the Syrian Opposition Coalition (SOC) and the Syrian Opposition's Supreme Military Council (SMC)

Memorandum for the Secretary of State [and] the Secretary of Defense

Pursuant to the authority vested in me as President by the Constitution and the laws of the United States, including section 552(c)(2) of the Foreign Assistance Act of 1961, as amended (FAA), 22 U.S.C. 2348a, I hereby determine that:

(1) as a result of an unforeseen emergency, the provision of assistance under chapter 6 of part II of the FAA in amounts in excess of funds otherwise available for such assistance is important to the national interests of the United States; and

(2) such an unforeseen emergency requires the immediate provision of assistance under chapter 6 of part II of the FAA.

In addition, pursuant to the authority vested in me as President by the Constitution and the laws of the United States, including section 614 of the FAA, I hereby determine that it is important to the security interests of the United States to furnish this assistance to the SOC and the SMC without regard to any other provision of law within the purview of section 614(a)(1) of the FAA.

I therefore direct the drawdown of up to $10 million in nonlethal commodities and services from the inventory and resources of any agency of the United States Government to provide food and medical supplies to the SOC and the SMC for distribution to those in need.

The Secretary of State is authorized and directed to report this determination to the Congress, to arrange for its publication in the *Federal Register*, and to coordinate execution of this drawdown.

THE WHITE HOUSE,
Washington, April 23, 2013

[FR Doc. 2013–09860
Filed 4–23–13; 11:15 am]
Billing code 4710–10

Presidential Documents

Proclamation 8959 of April 19, 2013

National Crime Victims' Rights Week, 2013

By the President of the United States of America

A Proclamation

Every year, millions of Americans fall victim to crime through no fault of their own. These are people we know: families trying to rebuild after financial fraud or identity theft, grandparents spending their golden years in the shadow of elder abuse, children whose right to safety has been stolen away by violence or neglect. Many struggle to get help in the aftermath of a crime, and some never report their crime at all. During National Crime Victims' Rights Week, we reaffirm our solemn obligation to ensure they get the services they need—from care and counseling to justice under the law.

Thanks to thousands of victim assistance programs all across our country, we are making progress toward that goal. As dedicated advocates continue their important work, my Administration will continue to support them by raising awareness about victims' rights, making sure those rights are protected and practiced, and investing in training programs for law enforcement and other professionals. I was proud to sign the Violence Against Women Reauthorization Act into law last month, preserving and strengthening critical services for victims of abuse. We have continued to crack down on financial crimes that leave too many families struggling to get back on their feet. And we are stepping up our efforts in the fight against human trafficking, whether it occurs halfway around the world or right here at home.

Even now, we have more work to do. As an epidemic of gun violence has swept through places like Newtown, Aurora, Oak Creek, and cities and towns all across America, our country has come up against the hard question of whether we are doing enough to protect our children and our communities. As Americans everywhere have stood up and spoken out for change, my Administration has responded with reforms that give law enforcement, schools, mental health professionals, and public health officials better tools to reduce violent crime. But we cannot solve this problem alone. That is why I will continue to fight for common-sense measures that would address the epidemic of gun violence and help keep our children safe.

By working to prevent crime and extend support to those in need, we keep faith with our fellow citizens and the basic values that unite us. Let us renew that common cause this week, and let us rededicate ourselves to advancing it in the year ahead.

NOW, THEREFORE, I, BARACK OBAMA, President of the United States of America, by virtue of the authority vested in me by the Constitution and the laws of the United States, do hereby proclaim April 21 through April 27, 2013, as National Crime Victims' Rights Week. I call upon all Americans to observe this week by participating in events that raise awareness of victims' rights and services, and by volunteering to serve victims in their time of need.

IN WITNESS WHEREOF, I have hereunto set my hand this nineteenth day of April, in the year of our Lord two thousand thirteen, and of the Independence of the United States of America the two hundred and thirty-seventh.

[FR Doc. 2013–09866
Filed 4–23–13; 11:15 am]
Billing code 3295–F3

Presidential Documents

Proclamation 8960 of April 19, 2013

National Volunteer Week, 2013

By the President of the United States of America

A Proclamation

As Americans, we are inheritors to a legacy of diversity unlike any other place on earth. We are home to more than 300 million people who come from every background, practice every faith, and hold every point of view. But where difference could draw us apart, we are bound together by a single sacred word: citizen. It defines our way of life, and it captures our belief in something bigger than ourselves—the notion that our destiny is shared, and all of us do better when we accept certain obligations to one another.

National Volunteer Week is a time to renew that fundamentally American idea of service and responsibility. It is also a time to recognize the men, women, and children who bring that principle into practice every day by lifting up the people around them. Volunteering rates are the highest they have been in years. More Americans are answering the call to serve—not for fanfare or attention, but because they want to give back. And as they do, they are making our communities stronger. They are boosting local economies. And they are building ladders of opportunity for those who need them most.

My Administration is dedicated to helping more Americans make that commitment. Through the Corporation for National and Community Service, we are investing in programs like AmeriCorps, FEMA Corps, and Senior Corps so more people can focus their talents on improving our neighborhoods. As we continue to draw down our forces abroad, we are opening up new ways for Americans to serve our veterans and military families here at home. We are encouraging States to let workers on unemployment insurance volunteer and build the skills they need to find a job. And this year, we are proposing new funding for the Volunteer Generation Fund that would help nonprofits recruit, manage, and maintain strong volunteer workforces. We also renamed the program the George H.W. Bush Volunteer Generation Fund, honoring the legacy of our 41st President and his enduring commitment to volunteerism.

We need not look far to see the power of service. Less than 6 months ago, when Hurricane Sandy bore down on our Atlantic coast, Americans responded with compassion and resolve. As an act of terror struck Boston at the finish line of a great race, and an explosion in Texas tore through a tight-knit community, we stood by each other in times of need. Ordinary men and women have stepped forward and accomplished extraordinary things together, uniting as friends and neighbors and fellow citizens. The strength they have shown reminds us that even in our darkest hours, we look out for each other. We pull together. And we move forward as one. During National Volunteer Week, let us tap into that spirit once more. To find a service opportunity nearby, visit www.Serve.gov.

NOW, THEREFORE, I, BARACK OBAMA, President of the United States of America, by virtue of the authority vested in me by the Constitution and the laws of the United States, do hereby proclaim April 21 through April 27, 2013, as National Volunteer Week. I call upon all Americans

to observe this week by volunteering in service projects across our country and pledging to make service a part of their daily lives.

IN WITNESS WHEREOF, I have hereunto set my hand this nineteenth day of April, in the year of our Lord two thousand thirteen, and of the Independence of the United States of America the two hundred and thirty-seventh.

[FR Doc. 2013–09867
Filed 4–23–13; 11:15 am]
Billing code 3295–F3

Presidential Documents

Proclamation 8961 of April 19, 2013

National Park Week, 2013

By the President of the United States of America

A Proclamation

For generations, ordinary Americans have taken it upon themselves to preserve our national landscape. They have been public servants and private citizens, patrons and Presidents—visionaries who saw our natural inheritance not as something to be used up, but as a treasure to be passed on. During National Park Week, we celebrate the wonders entrusted to us by our forebears and recommit to preserving them for our children and grandchildren.

We also take time to remember that in places like the Grand Canyon and the Teton Range, we see more than raw beauty. We see expansive freedom and rugged independence. We see the big ideas and bold ingenuity that inspired the first conservationists. We see our belief in collective responsibility—the notion that all of us have an equal share in this land and an equal obligation to keep it safe. These spaces embody the best of the American spirit, and they summon us to experience it firsthand.

This week, the National Park Service will make that opportunity available to everyone by offering free admission to every park in the Union from April 22 through April 26. And to keep building on our country's long legacy of conservation, I have been proud to establish eight new National Monuments in the past year. These sites honor rich histories, spectacular landscapes, and pioneering heroes of the American story, from Colonel Charles Young to Harriet Tubman to Cesar Chavez. They also reflect my commitment to advancing a 21st-century conservation strategy that responds to the priorities of the American people, strengthens local economies, and protects our most special places for generations to come.

As we mark this week, I encourage all Americans to experience our natural heritage by stepping into the outdoors. To find a National Park in your area, visit www.NPS.gov.

NOW, THEREFORE, I, BARACK OBAMA, President of the United States of America, by virtue of the authority vested in me by the Constitution and the laws of the United States, do hereby proclaim April 20 through April 28, 2013, as National Park Week. I encourage all Americans to visit their National Parks and be reminded of these unique blessings we share as a Nation.

IN WITNESS WHEREOF, I have hereunto set my hand this nineteenth day of April, in the year of our Lord two thousand thirteen, and of the Independence of the United States of America the two hundred and thirty-seventh.

[FR Doc. 2013–09869
Filed 4–23–13; 11:15 am]
Billing code 3295–F3

Presidential Documents

Proclamation 8962 of April 19, 2013

Earth Day, 2013

By the President of the United States of America

A Proclamation

As the world's technological leader and home to some of its most breathtaking natural wonders, America has a special responsibility to safeguard our environment. On Earth Day, we celebrate our rich legacy of stewardship and reflect on what we can do, as individuals and as a Nation, to preserve our planet for future generations.

The first Earth Day marked a renewal of America's global leadership in conservation. It began as a national discussion on pollution and came to embody a simple truth: that nothing is more powerful than millions of voices calling for change. In only a few years, those voices rang as clear in our laws as on our streets—from the creation of the Environmental Protection Agency to landmark legislation for clean air and water. These successes continue to bring health and prosperity to communities nationwide, demonstrating that our economy can grow alongside a healthy environment.

As environmental challenges evolve with a changing world, my Administration is committed to meeting them. During my first term, we launched the America's Great Outdoors initiative, made historic progress restoring precious ecosystems, and finalized standards to curb toxic emissions from power plants. Implementing these standards will help prevent thousands of premature deaths each year by substantially reducing mercury and other pollutants.

We have made real progress, but we cannot stop there. We cannot afford to ignore what the overwhelming judgment of science tells us: that climate change is real and that it poses an urgent threat to our people and our planet. That is why my Administration set historic fuel efficiency standards that will nearly double how far our cars go on a gallon of gas while reducing harmful carbon pollution. It is why we made unprecedented investments in clean energy, allowing us to double renewable energy production in only 4 years. And it is why I am challenging Americans to double it again by 2020.

Because climate change and other environmental problems cannot be fully addressed by government alone, we are also engaging key stakeholders at home and abroad. Last year, we launched a global initiative to cut short-lived climate pollutants that contribute to global warming. We have proposed historic investments in Land and Water Conservation Fund programs. And we continue to stand behind innovators and entrepreneurs who will unleash the next wave of clean energy technologies and drive long-term economic growth. At the same time, we are working to protect our communities and our economy from the unavoidable effects of climate change that we are already starting to feel.

Today, America is sending less carbon pollution into the environment than we have in nearly 20 years. But we owe it to our children to do more. That is why I have called on the Congress to pursue a bipartisan, market-based solution to climate change. In the meantime, I will direct my Cabinet to come up with executive actions to reduce pollution, prepare our communities for the consequences of climate change, and speed our transition to sustainable energy.

More than four decades after the first Earth Day, millions of Americans have answered the call to protect the environment. Today, let us do so again by joining together, raising our voices, and standing up for our planet and our future.

NOW, THEREFORE, I, BARACK OBAMA, President of the United States of America, by virtue of the authority vested in me by the Constitution and the laws of the United States, do hereby proclaim April 22, 2013, as Earth Day. I encourage all Americans to participate in programs and activities that will protect our environment and contribute to a healthy, sustainable future.

IN WITNESS WHEREOF, I have hereunto set my hand this nineteenth day of April, in the year of our Lord two thousand thirteen, and of the Independence of the United States of America the two hundred and thirty-seventh.

[FR Doc. 2013–09870
Filed 4–23–13; 11:15 am]
Billing code 3295–F3

Reader Aids

Federal Register

Vol. 78, No. 79

Wednesday, April 24, 2013

CUSTOMER SERVICE AND INFORMATION

Federal Register/Code of Federal Regulations	
General Information, indexes and other finding aids	**202–741–6000**
Laws	**741–6000**
Presidential Documents	
Executive orders and proclamations	**741–6000**
The United States Government Manual	**741–6000**
Other Services	
Electronic and on-line services (voice)	**741–6020**
Privacy Act Compilation	**741–6064**
Public Laws Update Service (numbers, dates, etc.)	**741–6043**
TTY for the deaf-and-hard-of-hearing	**741–6086**

ELECTRONIC RESEARCH

World Wide Web

Full text of the daily Federal Register, CFR and other publications is located at: **www.fdsys.gov.**

Federal Register information and research tools, including Public Inspection List, indexes, and links to GPO Access are located at: **www.ofr.gov.**

E-mail

FEDREGTOC-L (Federal Register Table of Contents LISTSERV) is an open e-mail service that provides subscribers with a digital form of the Federal Register Table of Contents. The digital form of the Federal Register Table of Contents includes HTML and PDF links to the full text of each document.

To join or leave, go to **http://listserv.access.gpo.gov** and select *Online mailing list archives, FEDREGTOC-L, Join or leave the list (or change settings);* then follow the instructions.

PENS (Public Law Electronic Notification Service) is an e-mail service that notifies subscribers of recently enacted laws.

To subscribe, go to **http://listserv.gsa.gov/archives/publaws-l.html** and select *Join or leave the list (or change settings);* then follow the instructions.

FEDREGTOC-L and **PENS** are mailing lists only. We cannot respond to specific inquiries.

Reference questions. Send questions and comments about the Federal Register system to: **fedreg.info@nara.gov**

The Federal Register staff cannot interpret specific documents or regulations.

Reminders. Effective January 1, 2009, the Reminders, including Rules Going Into Effect and Comments Due Next Week, no longer appear in the Reader Aids section of the Federal Register. This information can be found online at **http://www.regulations.gov.**

CFR Checklist. Effective January 1, 2009, the CFR Checklist no longer appears in the Federal Register. This information can be found online at **http://bookstore.gpo.gov/.**

FEDERAL REGISTER PAGES AND DATE, APRIL

19393–19584 1
19585–19978 2
19979–20212 3
20213–20408 4
20409–20782 5
20783–21014 8
21015–21210 9
21211–21502 10
21503–21816 11
21817–22150 12
22151–22410 15
22411–22766 16
22767–23104 17
23105–23456 18
23457–23670 19
23671–23828 22
23829–24032 23
24033–24326 24

CFR PARTS AFFECTED DURING APRIL

At the end of each month the Office of the Federal Register publishes separately a List of CFR Sections Affected (LSA), which lists parts and sections affected by documents published since the revision date of each title.

2 CFR

Proposed Rules:
1329 23699

3 CFR

Proclamations:
8948 20213
8949 20215
8950 20217
8951 20219
8952 20221
8953 20223
8954 20409
8955 21813
8956 21815
8957 23103
8958 23669
8959 24319
8960 24321
8961 24323
8962 24325

Executive Orders:
13635 (superseded by 13641) 21503
13639 19979
13640 21211
13641 21503

Administrative Orders:
Order of April 10, 2013 22409
Memorandums:
Memo. of May 31, 2011 (revoked by Memo. of March 29, 2013) 20225
Memo. of March 29, 2013 20225
Memo. of April 5, 2013 21213
Memorandum of April 5, 2013 22763
Presidential Determinations:
No. 2013–07 of April 8, 2013 22765
No. 2013–8 of April 19, 2013 24317

5 CFR

532 21515
1201 .....21517, 23457
1208 23457
9601 22767

Proposed Rules:
733 20497
950 20820

7 CFR

272 20411
457 22411
800 22151
922 21518
923 21520
927 .....21521, 24033, 24036
948 23829
959 23671
985 23673
1437 21015
3201 .....19393, 20783

Proposed Rules:
985 22202
4280 22044

8 CFR

103 22770
208 22770
214 24047
1292 19400

10 CFR

72 22411
430 21215
431 23336

Proposed Rules:
2 20498
26 22209
50 21275
52 21275
73 .....21567, 23684
429 .....19606, 20832, 22431
430 .....19606, 20502, 20832, 20842
431 20503

12 CFR

240 21019
242 20756
272 19981
Ch. III 22771
615 .....21035, 23438
621 21035
652 21035
Ch. X 21218

Proposed Rules:
246 23162
1026 23171
Ch. XII 23507

13 CFR

Proposed Rules:
39 23866
Ch. III 22801

14 CFR

25 .....19981, 21037
33 19982
39 .....19983, 20227, 20229, 20234, 21227, 21230, 21233, 21236, 22166, 22168, 22170, 22172, 22175, 22178, 22180, 22182, 22185, 23105, 23107, 23110, 23112, 23114, 23458, 23462, 23465, 23468, 23830, 24037, 24041

71 .....19985, 21043, 21044, 22189, 22190, 22413, 22414, 22415, 22416, 22417
73.....21817
95.....20783
97.....21239, 21242
1209.....20422
Proposed Rules:
39 .....19628, 20503, 20505, 20507, 20509, 20844, 21072, 21074, 21077, 21079, 21082, 21276, 21279, 21569, 21571, 21573, 21576, 21578, 21854, 22209, 22213, 22215, 22432, 22435, 22439, 22802, 22806, 23685, 23686, 23688, 23690, 23691, 23692, 23694, 23696, 23698
71 .....20846, 21084, 21856
121.....19630

15 CFR

730.....22660
732.....22660
734.....22660
736.....22660
738.....22660
740.....22660
742.....22660
743.....22660
744.....22660
746.....22660
748.....22660, 23472
750.....22660
756.....22660
758.....22660
762.....22660
764.....22660
770.....22660
772.....22660
774.....22660
902.....22950
Proposed Rules:
29.....23699

16 CFR

309.....23832
Proposed Rules:
1112.....20511
1226.....20511

17 CFR

1.....21045, 22418
3.....20788, 22418
5.....22418
9.....22418
11.....22418
23.....20788, 21045
31.....22418
40.....22418
41.....22418
50.....21750
140.....21522, 22418
145.....22418
162.....23638
170.....22418
171.....22418
190.....22418
240.....21046
248.....23638
249.....21046
Proposed Rules:
23.....20848

18 CFR

40.....22773
154.....19409
376.....21245
Proposed Rules:
40.....24101, 24107

19 CFR

201.....23474
210.....23474
351.....21246, 22773

20 CFR

655.....24047
Proposed Rules:
638.....19632
670.....19632

21 CFR

73.....19413
510.....19986, 21058
520.....21058
522.....19986, 21058
524.....21058
526.....21058
529.....21058
558.....19986, 21058
600.....19585
1308.....21818
Proposed Rules:
Ch. I.....21085
107.....22442
660.....23508
801.....23508
809.....23508
876.....20268
882.....20268
892.....20268
1308.....21858

22 CFR

120.....21523, 22740
121.....22740
123.....22740
126.....21523

23 CFR

Proposed Rules:
771.....20074

24 CFR

Proposed Rules:
5.....23178
202.....23178

25 CFR

518.....20236
547.....24061
558.....21826
581.....21060
584.....21060
585.....21060
Proposed Rules:
170.....21861

26 CFR

1.....23116, 23487
602.....23116
Proposed Rules:
1 .....19950, 20523, 23183
53.....20523

27 CFR

447.....23675
Proposed Rules:
9.....20544

28 CFR

811.....23835
Proposed Rules:
0.....21862

29 CFR

1926.....23837
4022.....22192
Proposed Rules:
15.....19632
4000.....20039
4001.....20039
4043.....20039
4204.....20039
4206.....20039
4231.....20039

30 CFR

48.....23134
250.....20423
1206.....20244
Proposed Rules:
701.....20394, 22451
736.....20394, 22451
737.....20394, 22451
738.....20394, 22451
750.....20394, 22451

32 CFR

103.....20443
105.....21716
182.....21826
226.....21256
706.....22421
Proposed Rules:
329.....24124

33 CFR

100 .....21258, 22193, 22777, 23843, 24063, 24065
117 .....19415, 19585, 20451, 21063, 21064, 21537, 21839, 22423, 23134, 23487, 23488, 23489, 23845, 23846, 23847
162.....23849
165 .....19988, 20454, 20792, 21260, 22195, 22778, 23135, 23489, 23849, 23850, 24068, 24069, 24071
Proposed Rules:
100 .....19632, 20066, 20277, 20849, 21864, 22808, 22811, 22814
101 .....20289, 20558, 22218
104 .....20289, 20558, 22218
105 .....20289, 20558, 22218
106 .....20289, 20558, 22218
165 .....19431, 20277, 20559, 20852, 23515, 23519, 23866, 23869

34 CFR

Ch. III.....22780, 22783
Proposed Rules:
Ch. II.....22452
Ch. III.....20069, 22817
Ch. VI.....22467

36 CFR

219.....23491
Proposed Rules:
7.....22470
294.....23522
1195.....23872
1280.....20563

37 CFR

1.....19416, 20180
2.....20180
7.....20180
10.....20180
11.....20180
41.....20180
382.....23054
Proposed Rules:
1.....21788
3.....21788

38 CFR

17.....19586
59.....21262
Proposed Rules:
17.....22219, 23702

39 CFR

111.....23137
Proposed Rules:
111.....24132
3001.....22820
3010.....22490

40 CFR

51.....23149
52 .....19421, 19596, 19599, 19602, 19990, 19991, 19994, 19998, 20001, 20244, 20793, 21065, 21537, 21540, 21542, 21545, 21547, 21841, 22197, 22198, 22423, 22785, 23492, 23495, 23677
60.....24094
62.....21846
63 .....20246, 23497, 24094
70.....19602
80.....22788
81 .....20001, 21547, 22425
82.....20004
98.....19605, 23149
131.....20252
180 .....20029, 20032, 20461, 21267, 22789, 23497, 24094
239.....20035
258.....20035
Proposed Rules:
52 .....19434, 19636, 20290, 20855, 20856, 20868, 21281, 21296, 21302, 21580, 21581, 21582, 21583, 21867, 22827, 22840, 23524, 23527, 23704
60.....22126
62.....21871
63.....22370
70.....19636
80.....20881
81 .....20856, 20868, 21583, 22501
82.....21871
98.....19802
239.....20073
258.....20073
300.....24134
450.....19434
721.....23184

42 CFR

68.....20466
88.....22794
433.....19918
Proposed Rules:
411.....21308
488.....20564
489.....20564
1001.....21314

44 CFR

67.....22221, 22222

Proposed Rules:

67.....22221, 22222

45 CFR

60.....20473
61.....20473

Proposed Rules:

155.....20581
160.....23872
164.....23872
1184.....22501

47 CFR

0.....23150
1 .....19424, 21555, 23150
2.....21555
13.....23150
20.....21555
22.....19424, 21555
24.....19424, 21555
27.....19424, 21555
54.....20796, 22198
73 .....21565, 21849, 23854
76.....20255
80.....23150
87.....23150
90 .....19424, 21555, 23855

Proposed Rules:

Ch. I 21879
1.....24138
2.....24138
15.....21320
20.....19442
27.....24138
54 .....23192, 23877, 24147
64.....21891
73.....21337
90.....23529, 24138

48 CFR

215.....21850
235.....21850
237.....21850
1552.....22795

Proposed Rules:

4.....23194
12.....23194
22.....23194
52.....23194
226.....22841
252.....22841
1834.....23199
1841.....23199
1846.....23199
1851.....23199
1852.....23199

49 CFR

107.....22798, 23503
171.....22798
501.....23158
571.....21850

Proposed Rules:

575.....20597
622.....20074

50 CFR

17 .....22626, 23984, 24008
217.....20800
622.....22950, 23858
635.....20258
640.....22950
648 .....20037, 20260, 21071
679 .....20037, 23683, 23864

Proposed Rules:

17 .....20074, 21086, 22506, 23533
20.....21200
216.....20604
218.....22096
223.....20718
224.....20718
229.....23708
600.....20291
622.....20292, 20496
635.....21584, 24148
648.....23733

LIST OF PUBLIC LAWS

This is a continuing list of public bills from the current session of Congress which have become Federal laws. It may be used in conjunction with "P L U S" (Public Laws Update Service) on 202–741–6043. This list is also available online at *http://www.archives.gov/federal-register/laws*.

The text of laws is not published in the **Federal Register** but may be ordered in "slip law" (individual pamphlet) form from the Superintendent of Documents, U.S. Government Printing Office, Washington, DC 20402 (phone, 202–512–1808). The text will also be made available on the Internet from GPO's Federal Digital System (FDsys) at *http://www.gpo.gov/fdsys*. Some laws may not yet be available.

S. 716/P.L. 113–7
To modify the requirements under the STOCK Act regarding online access to certain financial disclosure statements and related forms. (Apr. 15, 2013; 127 Stat. 438)
Last List March 28, 2013

Public Laws Electronic Notification Service (PENS)

PENS is a free electronic mail notification service of newly enacted public laws. To subscribe, go to *http://listserv.gsa.gov/archives/publaws-l.html*

Note: This service is strictly for E-mail notification of new laws. The text of laws is not available through this service. **PENS** cannot respond to specific inquiries sent to this address.