DEPARTMENT OF TRANSPORTATION

Federal Aviation Administration

14 CFR Part 39

[Docket No. FAA–2012–1297; Directorate Identifier 2012–SW–100–AD; Amendment 39–17285; AD 2012–25–04]

RIN 2120–AA64

Airworthiness Directives; Eurocopter France Helicopters

AGENCY: Federal Aviation Administration (FAA), Department of Transportation (DOT).

ACTION: Final rule; request for comments.

SUMMARY: We are superseding an existing emergency airworthiness directive (EAD) for Eurocopter France (Eurocopter) Model AS350B3 helicopters with certain part-numbered laminated half-bearings (bearings) and tail rotor (T/R) blades installed. The existing EAD currently requires installing two placards and revising the Rotorcraft Flight Manual (RFM). The EAD also requires certain checks and inspecting and replacing, if necessary, all four bearings. Finally, the EAD requires a one-time removal and inspection of the bearings, and replacing the bearings if necessary. Since we issued that EAD, we have determined that newly-designed helicopters with other part-numbered T/R blades may be affected by this unsafe condition and that the requirements should allow the bearing removal and inspection to be performed before the last flight of the day. This superseding AD removes the bearing and T/R blade part numbers (P/N) from the applicability paragraph and clarifies when the bearing removal and inspection is required. The actions are intended to prevent vibration due to a failed bearing, failure of the T/R, and subsequent loss of control of the helicopter.

DATES: This AD becomes effective May 9, 2013.

We must receive comments on this AD by June 24, 2013.

ADDRESSES: You may send comments by any of the following methods:

- *Federal eRulemaking Docket:* Go to *http://www.regulations.gov.* Follow the online instructions for sending your comments electronically.
- *Fax:* 202–493–2251.
- *Mail:* Send comments to the U.S. Department of Transportation, Docket Operations, M–30, West Building Ground Floor, Room W12–140, 1200 New Jersey Avenue SE., Washington, DC 20590–0001.
- *Hand Delivery:* Deliver to the ''Mail'' address between 9 a.m. and 5 p.m., Monday through Friday, except Federal holidays.

Examining the AD Docket

You may examine the AD docket on the Internet at *http://www.regulations.gov* or in person at the Docket Operations Office between 9 a.m. and 5 p.m., Monday through Friday, except Federal holidays. The AD docket contains this AD, the economic evaluation, any comments received, and other information. The street address for the Docket Operations Office (telephone 800–647–5527) is in the **ADDRESSES** section. Comments will be available in the AD docket shortly after receipt.

For service information identified in this AD, contact American Eurocopter Corporation, 2701 N. Forum Drive, Grand Prairie, TX 75052; telephone (972) 641–0000 or (800) 232–0323; fax (972) 641–3775; or at *http://www.eurocopter.com/techpub.*You may review the referenced service information at the FAA, Office of the Regional Counsel, Southwest Region, 2601 Meacham Blvd., Room 663, Fort Worth, Texas 76137.

FOR FURTHER INFORMATION CONTACT: Robert Grant, Aviation Safety Engineer, Safety Management Group, FAA, 2601 Meacham Blvd., Fort Worth, Texas 76137; telephone (817) 222–5110; email *robert.grant@faa.gov.*

SUPPLEMENTARY INFORMATION:

Comments Invited

This AD is a final rule that involves requirements affecting flight safety, and we did not provide you with notice and an opportunity to provide your comments prior to it becoming effective. However, we invite you to participate in this rulemaking by submitting written comments, data, or views. We also invite comments relating to the economic, environmental, energy, or federalism impacts that resulted from adopting this AD. The most helpful comments reference a specific portion of the AD, explain the reason for any recommended change, and include supporting data. To ensure the docket does not contain duplicate comments, commenters should send only one copy of written comments, or if comments are filed electronically, commenters should submit them only one time. We will file in the docket all comments that we receive, as well as a report summarizing each substantive public contact with FAA personnel concerning this rulemaking during the comment period. We will consider all the comments we receive and may conduct additional rulemaking based on those comments.

Discussion

The European Aviation Safety Agency (EASA), which is the Technical Agent for the Member States of the European Union, has issued EASA Emergency AD No. 2012–0207–E, dated October 5, 2012 (EAD 2012–0207–E), to correct an unsafe condition for Eurocopter Model AS 350 B3 helicopters modified by Modification (MOD) 07 5601. MOD 07 5601 is an integral part of a specific Model AS350B3 configuration, commercially identified as ''AS350B3e'' and is not fitted on Model AS350B3 helicopters of other configurations. EASA advises that premature failures of bearings, P/N 704A33–633–261, installed in combination with T/R blades P/N 355A12.0055.00 or 355A12.0055.01, have recently been detected on AS 350 B3 helicopters in ''AS350B3e'' configuration. Three cases of vibrations originating from the T/R, caused by failure of the bearings, were reported, which were detected in flight. Subsequently, an accident occurred in which the pilot felt strong vibrations from the T/R before losing control of the helicopter. An investigation revealed that prior to the accident, the bearings had been replaced twice on the helicopter due to deterioration. EASA EAD 2012–0207–E requires installing placards and changing the RFM to limit the flight envelope by reducing the Velocity Never Exceed (V_{NE}) true airspeed (TAS) limitation to reduce the dynamic loads on the T/R, a one-time pre-flight inspection and repetitive post-flight inspections of the bearings to detect damage, a one-time ''After Last Flight of the day'' (ALF) inspection (including T/R disassembly), and replacing all bearings if any bearing is damaged.

On October 17, 2012, we issued EAD No. 2012–21–51 for Eurocopter Model AS350B3 helicopters with MOD 07 5601, with bearing P/N 704A33–633–261 in combination with tail rotor blade P/N 355A12.0055.00 or 355A12.0055.01, installed. We sent that EAD to all known U.S. owners and operators of these helicopters. That EAD requires, before further flight, installing two placards on the instrument panel and revising the RFM to reduce the V_{NE} indicated airspeed (IAS) limitation. It also requires, before further flight and thereafter after each flight, visually checking all visible faces of the bearings for separation, a crack, or an extrusion, and replacing the four bearings if there is an extrusion or if there is a separation or a crack on the pressure side bearing greater than 5 millimeters (.196 inches). Lastly, the EAD requires, after the last flight of the day, performing a one-time

inspection of the bearings for a separation, a crack, or an extrusion, and replacing the four bearings if there is a separation, crack, or extrusion. Our EAD differed from EASA EAD 2012–0207–E in that the EASA EAD placard limited TAS, while the placard in our EAD limited IAS.

Actions Since Existing EAD Was Issued

Since we issued EAD 2012–21–51, EASA issued EAD No. 2012–0217–E, dated October 19, 2012 (EAD 2012–0217–E), which superseded EASA EAD 2012–0207–E. EAD 2012–0217–E retains some of the requirements of EAD 2012–207–E, changes the airspeed limitation from TAS to IAS, and requires inserting a temporary engine health check procedure into the RFM. We are not issuing this superseding AD to adopt the revised EASA requirements, because the airspeed limitations in EAD 2012–21–51 currently use IAS, and the revised engine health check procedure does not correct the unsafe condition.

In addition, we have been informed by EASA that newly-designed T/R blades with a P/N not listed in EAD 2012–21–51 have been developed and may be installed on these model helicopters, but will also be affected by the unsafe condition. Additionally, the compliance interval for the bearing removal and inspection required in EAD 2012–21–51 did not allow an operator to perform the inspection prior to the last flight of the day, if desired, and would have required the bearing removal and inspection after the last flight of the day following any bearing replacement, which was not intended when we issued the EAD. Therefore, we are issuing this AD to remove the laminated half-bearing and T/R blade P/Ns from the applicability and revise the language of the removal and inspection paragraph to clarify when that inspection is required.

FAA's Determination

These helicopters have been approved by the aviation authority of France and are approved for operation in the United States. Pursuant to our bilateral agreement with France, EASA, its technical representative, has notified us of the unsafe condition described in the EASA AD. We are issuing this AD because we evaluated all information provided by EASA and determined the unsafe condition exists and is likely to exist or develop on other helicopters of the same type design.

Related Service Information

We reviewed Eurocopter Emergency Alert Service Bulletin (EASB) with two numbers, No. 01.00.65 for the Model AS350B3 helicopters and No. 01.00.24 for the non-FAA type certificated Model AS550C3 helicopters, both Revision 0, and both dated October 4, 2012. The EASB specifies installing two placards on the instrument panel and revising the RFM to limit airspeed to both 100 knots IAS and TAS, on-aircraft checking of the bearings after each flight, and performing a one-time removal and inspection of the bearings. The EASB also defines an RFM procedure in case of in-flight vibrations originating in the tail rotor. Revision 1 of the EASB, dated October 18, 2012, which Eurocopter issued after we issued EAD 2012–21–51, introduced a new procedure for the periodic ''Engine Health Check'' procedure, and specified to remove the placard and RFM changes with the V_{NE} TAS limitation. Revision 2 of the EASB, dated November 2, 2012, accounted for newly designed T/R blades by removing specific part-numbered T/R blades from the Effectivity section of the EASB.

AD Requirements

This AD retains the requirements of EAD 2012–21–51, expands the applicability by removing the half-bearing and the T/R blade P/Ns from the applicability paragraph, clarifies that the removal and inspection of the bearings is not a daily inspection, and clarifies that the inspection of the bearings may be performed prior to the last flight of the day (not after the last flight of the day).

Differences Between This AD and the EASA AD

The EASA AD requires removing the placard and RFM changes with the TAS limitation and replacing it with an IAS limitation. Since the FAA EAD did not include the TAS limitation, this AD does not need to require removing it. This AD does not require inserting the temporary engine health check procedure in the RFM.

Interim Action

We consider this AD interim action. The design approval holder is currently developing a modification that will address the unsafe condition specified in this AD. Once this modification is developed, approved, and available, we might consider additional rulemaking.

Costs of Compliance

We estimate that this AD will affect 18 helicopters of U.S. Registry.

We estimate that operators may incur the following costs in order to comply with this AD. Installing a placard and revising the RFM will require about .5 work-hour, at an average labor rate of $85 per hour, for a cost per helicopter of $43 and a total cost to U.S. operators of $774. Disassembling and inspecting the bearings will require about 6 work-hours, at an average labor rate of $85 per hour, for a cost per helicopter of $510 and a total cost to U.S. operators of $9,180.

If necessary, replacing the bearings installed on the aircraft will require about 6 work-hours, at an average labor rate of $85, and required parts will cost $2,415, for a cost per helicopter of $2,925.

FAA's Justification and Determination of the Effective Date

The short compliance time involved is required because the previously described unsafe condition can adversely affect both the structural integrity and controllability of the helicopter. Therefore, because several of the corrective actions are required before further flight, this AD must be issued immediately.

Since an unsafe condition exists that requires the immediate adoption of this AD, we determined that notice and opportunity for public comment before issuing this AD are impracticable and that good cause exists for making this amendment effective in less than 30 days.

Authority for This Rulemaking

Title 49 of the United States Code specifies the FAA's authority to issue rules on aviation safety. Subtitle I, section 106, describes the authority of the FAA Administrator. ''Subtitle VII: Aviation Programs,'' describes in more detail the scope of the Agency's authority.

We are issuing this rulemaking under the authority described in ''Subtitle VII, Part A, Subpart III, Section 44701: General requirements.'' Under that section, Congress charges the FAA with promoting safe flight of civil aircraft in air commerce by prescribing regulations for practices, methods, and procedures the Administrator finds necessary for safety in air commerce. This regulation is within the scope of that authority because it addresses an unsafe condition that is likely to exist or develop on products identified in this rulemaking action.

Regulatory Findings

We determined that this AD will not have federalism implications under Executive Order 13132. This AD will not have a substantial direct effect on the States, on the relationship between the national Government and the States, or on the distribution of power and responsibilities among the various levels of government.

For the reasons discussed, I certify that this AD:

1. Is not a ''significant regulatory action'' under Executive Order 12866;

2. Is not a ''significant rule'' under DOT Regulatory Policies and Procedures (44 FR 11034, February 26, 1979);

3. Will not affect intrastate aviation in Alaska to the extent that it justifies making a regulatory distinction; and

4. Will not have a significant economic impact, positive or negative, on a substantial number of small entities under the criteria of the Regulatory Flexibility Act.

We prepared an economic evaluation of the estimated costs to comply with this AD and placed it in the AD docket.

List of Subjects in 14 CFR Part 39

Air transportation, Aircraft, Aviation safety, Incorporation by reference, Safety.

Adoption of the Amendment

Accordingly, under the authority delegated to me by the Administrator, the FAA amends 14 CFR part 39 as follows:

PART 39—AIRWORTHINESS DIRECTIVES

■ 1. The authority citation for part 39 continues to read as follows:

Authority: 49 U.S.C. 106(g), 40113, 44701.

§ 39.13 [Amended]

■ 2. The FAA amends § 39.13 by adding the following new airworthiness directive (AD):

2012–25–04 Eurocopter France: Amendment 39–17285; Docket No. FAA–2012–1297; Directorate Identifier 2012–SW–100–AD.

(a) Applicability

This AD applies to Eurocopter France (Eurocopter) Model AS350B3 helicopters with Modification (MOD) 07 5601 installed, certificated in any category.

Note 1 to paragraph (a): MOD 07 5601 is an integral part of a specific Model AS350B3 configuration, commercially identified as ''AS350B3e'' and is not fitted on Model AS350B3 helicopters of other configurations.

(b) Unsafe Condition

This AD defines the unsafe condition as severe vibrations due to failure of laminated half-bearings (bearings). This condition could result in failure of the tail rotor and subsequent loss of control of the helicopter.

(c) Affected ADs

This AD supersedes Emergency AD No. 2012–21–51, Directorate Identifier 2012–SW–095–AD, dated October 17, 2012.

(d) Effective Date

This AD becomes effective May 9, 2013.

(e) Compliance

You are responsible for performing each action required by this AD within the specified compliance time unless it has already been accomplished prior to that time.

(f) Required Actions

(1) Before further flight:

(i) Install a velocity never exceed (V_{NE}) placard that reads as follows on the instrument panel in full view of the pilot and co-pilot with 6-millimeter red letters on a white background:

VNE LIMITED TO 100 KTS IAS.

(ii) Replace the IAS limit versus the flight altitude placard located inside the cabin on the center post with the placard as depicted in Table 1 to paragraph (f) of this AD:

TABLE 1 TO PARAGRAPH (F)

VNE POWER ON	
Hp (ft)	IAS (kts)
0	100
2000	97
4000	94
6000	91
8000	88
10000	85
12000	82
14000	79
16000	76
18000	73
20000	70
22000	67
Valid for VNE POWER OFF	

(2) Before further flight, revise the Rotorcraft Flight Manual (RFM) by inserting a copy of this AD into the RFM or by making pen and ink changes as follows:

(i) Revise paragraph 2.3 of the RFM by inserting the following:

VNE limited to 100 kts IAS.

(ii) Revise paragraph 2.6 of the RFM by inserting Table 2 to Paragraph (f) of this AD.

TABLE 2 TO PARAGRAPH (F)

VNE POWER ON	
Hp (ft)	IAS (kts)
0	100
2000	97
4000	94
6000	91
8000	88
10000	85
12000	82
14000	79
16000	76
18000	73
20000	70
22000	67
Valid for VNE POWER OFF	

(iii) Add the following as paragraph 3.3.3 to the RFM:

3.3.3 IN-FLIGHT VIBRATIONS FELT IN THE PEDALS

Symptom:

IN-FLIGHT VIBRATIONS FELT IN THE PEDALS

1. CHECK PEDAL EFFECTIVENESS
2. SMOOTHLY REDUCE THE SPEED TO VY
3. AVOID SIDESLIP AS MUCH AS POSSIBLE

LAND AS SOON AS POSSIBLE

(3) Before further flight, and thereafter after each flight, without exceeding 3 hours time-in-service between two checks, visually check each bearing as follows:

(i) Position both tail rotor blades horizontally.

(ii) Apply load (F) by hand, perpendicular to the pressure face of one tail rotor blade (a), as shown in Figure 1 to paragraph (f) of this AD, taking care not to reach the extreme position against the tail rotor hub. The load will deflect the tail rotor blade towards the tail boom.

(iii) While maintaining the load, check all the visible faces of the bearings (front and side faces) in area B of DETAIL A of Figure 1 to paragraph (f) of this AD for separation between the elastomer and metal parts, a crack in the elastomer, or an extrusion (see example in Figure 2 to paragraph (f) of this AD). A flashlight may be used to enhance the check.

BILLING CODE 4910–13–P

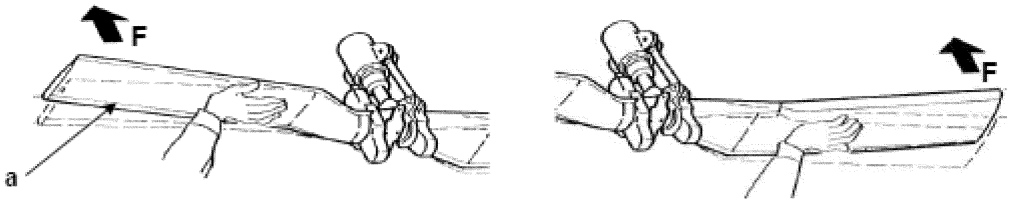

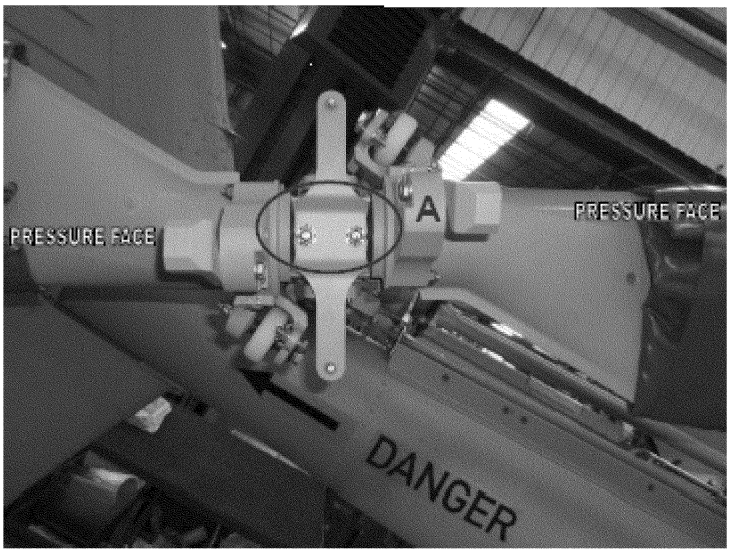

DETAIL A

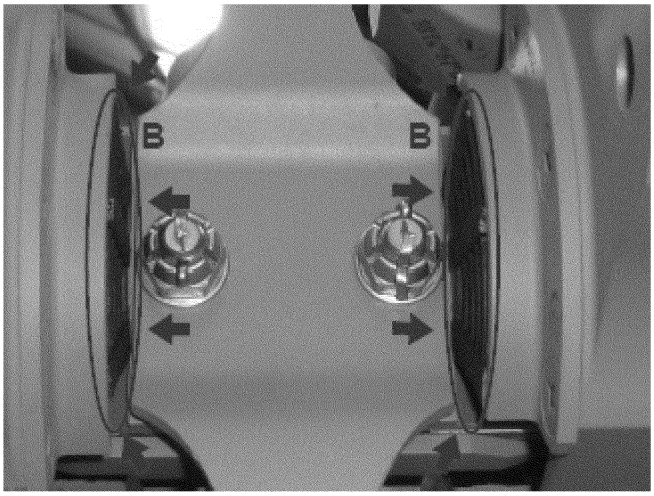

Figure 1 to paragraph (f)

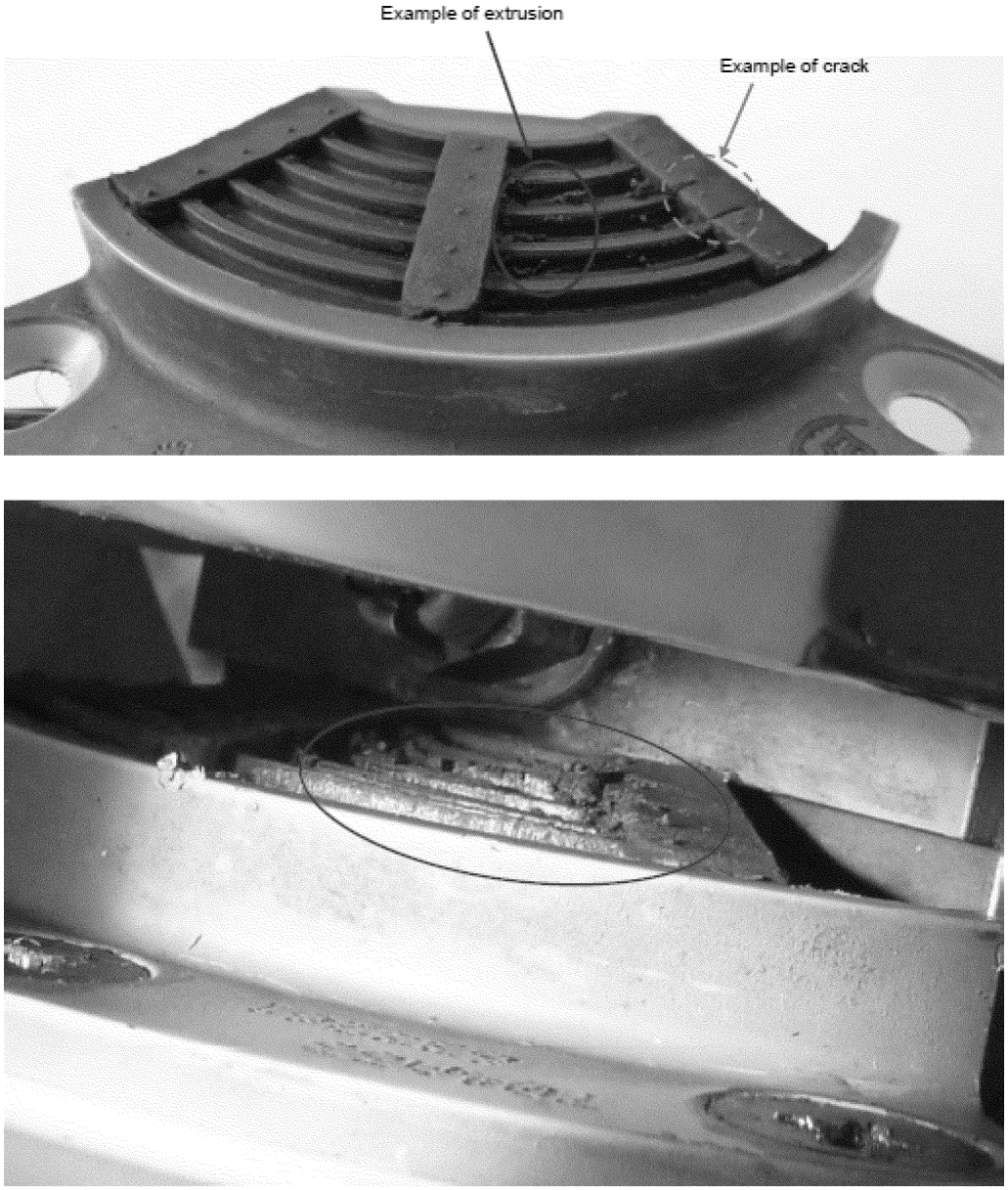

Figure 2 to paragraph (f)

(iv) Repeat paragraphs (f)(3)(i) through (f)(3)(iii) on the other tail rotor blade.

(v) Apply load (G) by hand perpendicular to the suction face of one tail rotor blade as shown in Figure 3 to paragraph (f) of this AD. The load will deflect the tail rotor blade away from the tail boom.

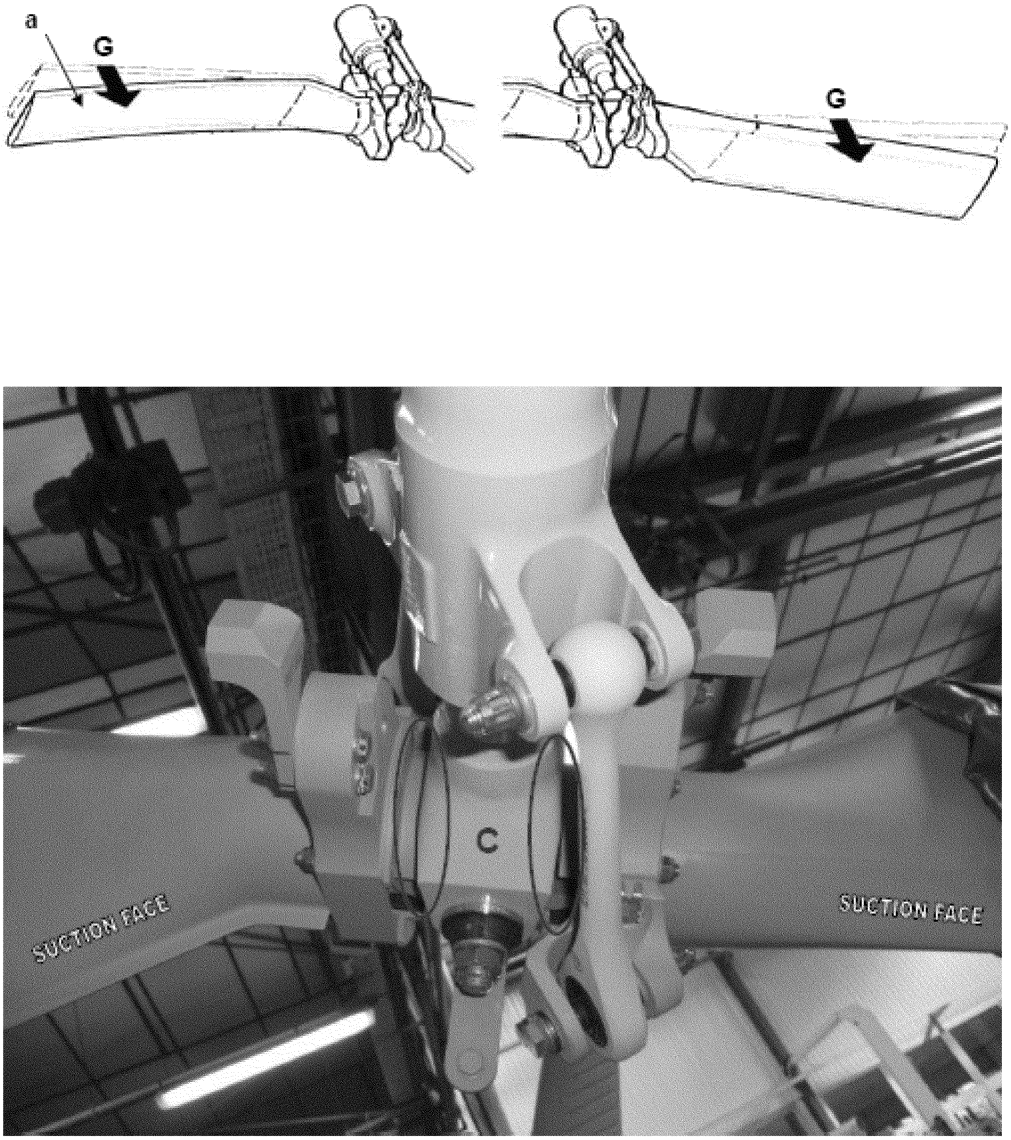

Figure 3 to paragraph (f)

(vi) While maintaining the load, check visible faces of Area C as shown in Figure 3 to paragraph (f) of this AD for any extrusion. A flashlight may be used to enhance the check.

(vii) Repeat paragraphs (f)(3)(v) and (f)(3)(vi) on the other tail rotor blade.

(4) The actions required by paragraphs (f)(3)(i) through (f)(3)(vii) of this AD may be performed by the owner/operator (pilot) holding at least a private pilot certificate, and must be entered into the aircraft records showing compliance with this AD in accordance with 14 CFR 43.9 (a)(1)–(4) and 14 CFR 91.417(a)(2)(v). The record must be maintained as required by 14 CFR 91.173, 121.380, or 135.439.

(5) If there is an extrusion on any bearing, before further flight, replace the four bearings with airworthy bearings.

(6) If there is a separation or a crack on the pressure side bearing, measure the separation or the crack. If the separation or crack is greater than 5 millimeters (.196 inches) as indicated by dimension ''L'' in Figure 4 to paragraph (f), before further flight, replace the four bearings with airworthy bearings.

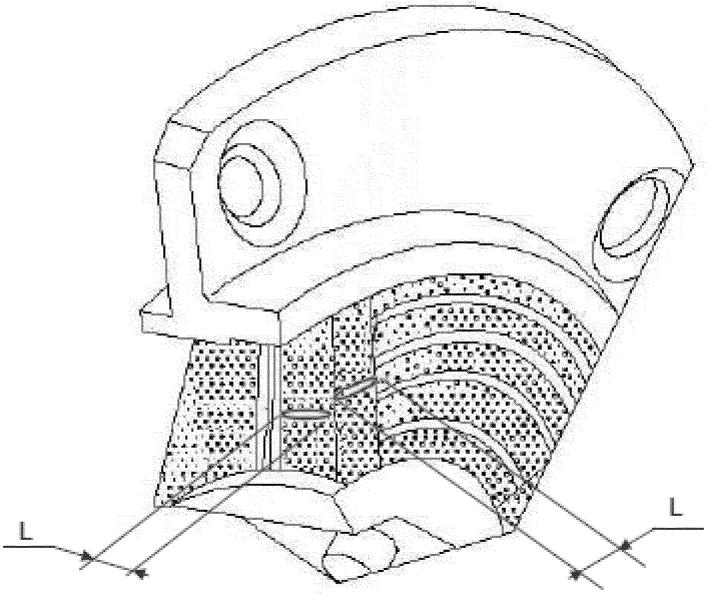

Figure 4 to paragraph (f)

(7) No later than after the last flight of the day, perform a one-time inspection by removing the bearings and inspecting for a separation, a crack, or an extrusion. This inspection is not a daily inspection. If there is a separation, crack, or extrusion, before further flight, replace the four bearings with airworthy bearings.

(g) Special Flight Permits

Special flight permits are prohibited by this AD.

(h) Alternative Methods of Compliance (AMOCs)

(1) The Manager, Safety Management Group, FAA, may approve AMOCs for this AD. Send your proposal to: Robert Grant, Aviation Safety Engineer, Safety Management Group, FAA, 2601 Meacham Blvd., Fort Worth, Texas 76137; telephone (817) 222–5110; email *robert.grant@faa.gov.*

(2) For operations conducted under a 14 CFR part 119 operating certificate or under 14 CFR part 91, subpart K, we suggest that you notify your principal inspector, or lacking a principal inspector, the manager of the local flight standards district office or certificate holding district office, before operating any aircraft complying with this AD through an AMOC.

(3) AMOCs approved previously in accordance with Emergency Airworthiness Directive No. 2012–21–51, dated October 17, 2012, are approved as AMOCs for the corresponding requirements in paragraph (f)(7) of this AD.

(i) Additional Information

(1) Eurocopter Emergency Alert Service Bulletin (EASB) No. 01.00.65, Revision 2, dated November 2, 2012, which is not incorporated by reference, contains additional information about the subject of this AD. For service information identified in this AD, contact American Eurocopter Corporation, 2701 N. Forum Drive, Grand Prairie, TX 75052; telephone (972) 641–0000 or (800) 232–0323; fax (972) 641–3775; or at *http://www.eurocopter.com/techpub.*You may review a copy of the service information at the FAA, Office of the Regional Counsel, Southwest Region, 2601 Meacham Blvd., Room 663, Fort Worth Texas 76137.

(2) The subject of this AD is addressed in European Aviation Safety Agency Emergency AD No. 2012–0217–E, dated October 19, 2012.

(j) Subject

Joint Aircraft Service Component (JASC) Code: 6400: Tail Rotor.

Issued in Fort Worth, Texas, on April 11, 2013.

Lance T. Gant,

Acting Directorate Manager, Rotorcraft Directorate, Aircraft Certification Service.

[FR Doc. 2013–09420 Filed 4–23–13; 8:45 am]

BILLING CODE 4910–13–P

DEPARTMENT OF HOMELAND SECURITY

8 CFR Part 214

[CIS No. 2536–13]

RIN 1615–AC02

DEPARTMENT OF LABOR

Employment and Training Administration

20 CFR Part 655

RIN 1205–AB69

Wage Methodology for the Temporary Non-Agricultural Employment H–2B Program, Part 2

AGENCY: Employment and Training Administration, Labor; U.S. Citizenship and Immigration Services, DHS.

ACTION: Interim final rule; request for comments.

SUMMARY: The Department of Homeland Security (DHS) and the Department of Labor (DOL) (jointly referred to as the Departments) are amending regulations governing certification for the employment of nonimmigrant workers in temporary or seasonal non-agricultural employment. This interim final rule revises how DOL provides the consultation that DHS has determined is necessary to adjudicate H–2B petitions by revising the methodology by which