AUTHENTICATED
U.S. GOVERNMENT
INFORMATION
GPO

FEDERAL REGISTER

Vol. 78 Wednesday,
No. 69 April 10, 2013

Pages 21211–21502

OFFICE OF THE FEDERAL REGISTER

The **FEDERAL REGISTER** (ISSN 0097–6326) is published daily, Monday through Friday, except official holidays, by the Office of the Federal Register, National Archives and Records Administration, Washington, DC 20408, under the Federal Register Act (44 U.S.C. Ch. 15) and the regulations of the Administrative Committee of the Federal Register (1 CFR Ch. I). The Superintendent of Documents, U.S. Government Printing Office, Washington, DC 20402 is the exclusive distributor of the official edition. Periodicals postage is paid at Washington, DC.

The **FEDERAL REGISTER** provides a uniform system for making available to the public regulations and legal notices issued by Federal agencies. These include Presidential proclamations and Executive Orders, Federal agency documents having general applicability and legal effect, documents required to be published by act of Congress, and other Federal agency documents of public interest.

Documents are on file for public inspection in the Office of the Federal Register the day before they are published, unless the issuing agency requests earlier filing. For a list of documents currently on file for public inspection, see *www.ofr.gov.*

The seal of the National Archives and Records Administration authenticates the Federal Register as the official serial publication established under the Federal Register Act. Under 44 U.S.C. 1507, the contents of the **Federal Register** shall be judicially noticed.

The **Federal Register** is published in paper and on 24x microfiche. It is also available online at no charge at *www.fdsys.gov*, a service of the U.S. Government Printing Office.

The online edition of the **Federal Register** is issued under the authority of the Administrative Committee of the Federal Register as the official legal equivalent of the paper and microfiche editions (44 U.S.C. 4101 and 1 CFR 5.10). It is updated by 6:00 a.m. each day the **Federal Register** is published and includes both text and graphics from Volume 59, 1 (January 2, 1994) forward. For more information, contact the GPO Customer Contact Center, U.S. Government Printing Office. Phone 202-512-1800 or 866-512-1800 (toll free). E-mail, *gpo@custhelp.com.*

The annual subscription price for the **Federal Register** paper edition is $749 plus postage, or $808, plus postage, for a combined **Federal Register, Federal Register** Index and List of CFR Sections Affected (LSA) subscription; the microfiche edition of the **Federal Register** including the **Federal Register** Index and LSA is $165, plus postage. Six month subscriptions are available for one-half the annual rate. The prevailing postal rates will be applied to orders according to the delivery method requested. The price of a single copy of the daily **Federal Register,** including postage, is based on the number of pages: $11 for an issue containing less than 200 pages; $22 for an issue containing 200 to 400 pages; and $33 for an issue containing more than 400 pages. Single issues of the microfiche edition may be purchased for $3 per copy, including postage. Remit check or money order, made payable to the Superintendent of Documents, or charge to your GPO Deposit Account, VISA, MasterCard, American Express, or Discover. Mail to: U.S. Government Printing Office—New Orders, P.O. Box 979050, St. Louis, MO 63197-9000; or call toll free 1-866-512-1800, DC area 202-512-1800; or go to the U.S. Government Online Bookstore site, see *bookstore.gpo.gov.*

There are no restrictions on the republication of material appearing in the **Federal Register.**

How To Cite This Publication: Use the volume number and the page number. Example: 77 FR 12345.

Postmaster: Send address changes to the Superintendent of Documents, Federal Register, U.S. Government Printing Office, Washington, DC 20402, along with the entire mailing label from the last issue received.

SUBSCRIPTIONS AND COPIES

PUBLIC

Subscriptions:

Paper or fiche	**202–512–1800**
Assistance with public subscriptions	**202–512–1806**

General online information **202–512–1530; 1–888–293–6498**

Single copies/back copies:

Paper or fiche	**202–512–1800**
Assistance with public single copies	**1–866–512–1800 (Toll-Free)**

FEDERAL AGENCIES

Subscriptions:

Paper or fiche	**202–741–6005**
Assistance with Federal agency subscriptions	**202–741–6005**

FEDERAL REGISTER WORKSHOP

THE FEDERAL REGISTER: WHAT IT IS AND HOW TO USE IT

FOR: Any person who uses the Federal Register and Code of Federal Regulations.

WHO: Sponsored by the Office of the Federal Register.

WHAT: Free public briefings (approximately 3 hours) to present:

1. The regulatory process, with a focus on the Federal Register system and the public's role in the development of regulations.
2. The relationship between the Federal Register and Code of Federal Regulations.
3. The important elements of typical Federal Register documents.
4. An introduction to the finding aids of the FR/CFR system.

WHY: To provide the public with access to information necessary to research Federal agency regulations which directly affect them. There will be no discussion of specific agency regulations.

WHEN: Tuesday, May 14, 2013
9 a.m.–12:30 p.m.

WHERE: Office of the Federal Register
Conference Room, Suite 700
800 North Capitol Street, NW.
Washington, DC 20002

RESERVATIONS: (202) 741–6008

Printed on recycled paper.

Contents

Federal Register

Vol. 78, No. 69

Wednesday, April 10, 2013

Agriculture Department
See Food Safety and Inspection Service
See Forest Service
NOTICES
Agency Information Collection Activities; Proposals, Submissions, and Approvals, 21338

Blind or Severely Disabled, Committee for Purchase From People Who Are
See Committee for Purchase From People Who Are Blind or Severely Disabled

Bureau of Consumer Financial Protection
RULES
Disclosure of Consumer Complaint Data, 21218–21226

Centers for Disease Control and Prevention
NOTICES
Meetings:
Advisory Board on Radiation and Worker Health, National Institute for Occupational Safety and Health, 21370
Board of Scientific Counselors, Office of Infectious Diseases, 21370

Centers for Medicare & Medicaid Services
PROPOSED RULES
Medicare Programs:
Physicians' Referrals to Health Care Entities With Which They Have Financial Relationships; Exception for Certain Electronic Health Records Arrangements, 21308–21314

Children and Families Administration
NOTICES
Funding Opportunities:
Family Violence Prevention and Services/Grants for Domestic Violence Shelters, etc., 21370–21379

Civil Rights Commission
NOTICES
Meetings; Sunshine Act, 21343

Coast Guard
RULES
Safety Zones:
Lubbers Cup Regatta; Spring Lake, MI, 21260–21262
Special Local Regulations:
Patriot Challenge Kayak Race, Ashley River; Charleston, SC, 21258–21260

Commerce Department
See Foreign-Trade Zones Board
See Industry and Security Bureau
See International Trade Administration
See National Oceanic and Atmospheric Administration

Committee for Purchase From People Who Are Blind or Severely Disabled
NOTICES
Procurement List; Additions and Deletions; Recissions, 21348–21349

Defense Department
See Navy Department
RULES
Shelter for the Homeless, 21256–21257
NOTICES
Meetings:
Defense Advisory Committee on Military Personnel Testing, 21349

Energy Department
See Federal Energy Regulatory Commission
RULES
Energy Conservation Program for Consumer Products:
Association of Home Appliance Manufacturers Petition for Reconsideration, 21215–21218
NOTICES
Authority to Import and Export Natural Gas:
J.P. Morgan Commodities Canada Corp., Sempra LNG Marketing, LLC, DTE Gas Co., et al., 21351–21352
Sabine Pass Liquefaction, LLC, Tenaska Washington Partners, LP, Chevron U.S.A. Inc., et al., 21349–21351
Reimbursement for Costs of Remedial Action at Active Uranium and Thorium Processing Sites; Update, 21352–21353

Environmental Protection Agency
RULES
Pesticide Tolerances:
Dinotefuran, 21267–21272
PROPOSED RULES
Implementation Plans; Approvals and Promulgations:
Missouri; Infrastructure SIP Requirements for Fine Particulate Matter National Ambient Air Quality Standards, 21281–21295
New Jersey; Infrastructure SIP for the 1997 8-Hour Ozone and the 1997 and 2006 Fine Particulate Matter Standards, 21296–21302
New York State Ozone Implementation Plan Revision, 21302–21308

Executive Office of the President
See Presidential Documents

Federal Aviation Administration
RULES
Airworthiness Directives:
Airbus Airplanes, 21227–21233
Eurocopter France Helicopters, 21233–21236
The Boeing Company Airplanes, 21236–21239
Standard Instrument Approach Procedures, and Takeoff Minimums and Obstacle Departure Procedures, 21239–21244
PROPOSED RULES
Airworthiness Directives:
The Boeing Company Airplanes, 21276–21281

Federal Communications Commission
PROPOSED RULES
Radio Broadcasting Services:
Matagorda, TX, 21337
Unlicensed National Information Infrastructure Devices in the 5 GHz Band, 21320–21337

NOTICES
Meetings:
Advisory Committee on Diversity for Communications in the Digital Age, 21354–21355
Tribal Mobility Fund Phase I Auction; Competitive Bidding Procedures, 21355–21364

Federal Emergency Management Agency
RULES
Final Flood Elevation Determinations, 21272–21274
NOTICES
Agency Information Collection Activities; Proposals, Submissions, and Approvals, 21384–21385
Application for Surplus Federal Real Property Public Benefit Conveyance and BRAC Program for Emergency Management Use, 21385–21386

Federal Energy Regulatory Commission
RULES
Continuity of Operations Plan, 21245–21246
NOTICES
Combined Filings, 21353–21354

Federal Maritime Commission
NOTICES
Agreements Filed, 21364–21365
Ocean Transportation Intermediary License Applicants, 21365–21366
Ocean Transportation Intermediary License Reissuances, 21366
Ocean Transportation Intermediary License Revocations, 21366

Federal Mine Safety and Health Review Commission
NOTICES
Meetings; Sunshine Act, 21366

Federal Reserve System
NOTICES
Agency Information Collection Activities; Proposals, Submissions, and Approvals, 21366–21367
Changes in Bank Control:
Acquisitions of Shares of a Bank or Bank Holding Company, 21367–21368
Acquisitions of Shares of a Savings and Loan Holding Company, 21368
Formations of, Acquisitions by, and Mergers of Bank Holding Companies, 21368

Fish and Wildlife Service
NOTICES
Comprehensive Conservation Plans:
Don Edwards San Francisco Bay National Wildlife Refuge; Alameda, Santa Clara, and San Mateo Counties, CA, 21397–21398

Food and Drug Administration
NOTICES
Agency Information Collection Activities; Proposals, Submissions, and Approvals:
Tobacco Health Document Submission, 21379–21380

Food Safety and Inspection Service
NOTICES
Agency Information Collection Activities; Proposals, Submissions, and Approvals, 21338–21340

Foreign Assets Control Office
NOTICES
Blocking or Unblocking of Persons and Property:
Amendments to the Specially Designated Nationals and Blocked Persons List, 21495–21497
General Licenses Related to the Burma Sanctions Program, 21497–21498

Foreign-Trade Zones Board
NOTICES
Grants of Authority for Subzone Status:
Hemlock Semiconductor Corp., Hemlock, MI, 21344

Forest Service
NOTICES
Agency Information Collection Activities; Proposals, Submissions, and Approvals:
Annual Wildfire Summary Report, 21340
Media Outlets for Publication of Legal and Action Notices:
Southern Region, 21340–21343
New Ski Area Water Rights Clause, 21343

General Services Administration
NOTICES
Meetings:
Green Building Advisory Committee, 21368–21369

Health and Human Services Department
See Centers for Disease Control and Prevention
See Centers for Medicare & Medicaid Services
See Children and Families Administration
See Food and Drug Administration
See Health Resources and Services Administration
See Inspector General Office, Health and Human Services Department
See National Institutes of Health
See Substance Abuse and Mental Health Services Administration
NOTICES
Agency Information Collection Activities; Proposals, Submissions, and Approvals, 21369–21370

Health Resources and Services Administration
NOTICES
Agency Information Collection Activities; Proposals, Submissions, and Approvals, 21380–21381

Homeland Security Department
See Coast Guard
See Federal Emergency Management Agency
See U.S. Citizenship and Immigration Services
See U.S. Customs and Border Protection

Housing and Urban Development Department
NOTICES
Agency Information Collection Activities; Proposals, Submissions, and Approvals:
Ginnie Mae Multiclass Securities Program Documents, 21393–21395
Requisition for Disbursement of Sections 202 & 811 Capital Advance/Loan Funds, 21392–21393
Standardized Form for Collecting Information Regarding Race and Ethnic Data, 21393
Funding Awards:
Choice Neighborhoods Grant Program; Fiscal Year 2012, 21395–21396
Meetings:
Manufactured Housing Consensus Committee; Structural and Design Subcommittee, 21396–21397

Industry and Security Bureau
NOTICES
Denials of Export Privileges:
Andro Telemi, a/k/a Andre Telimi, Andre Telemi, 21344–21345
Liem Duc Huynh, a/k/a Duc Huynh, 21345–21346
Meetings:
Emerging Technology and Research Advisory Committee, 21346–21347

Inspector General Office, Health and Human Services Department
PROPOSED RULES
Medicare and State Health Care Programs:
Fraud and Abuse; Electronic Health Records Safe Harbor Under the Anti-Kickback Statute, 21314–21320

Interior Department
See Fish and Wildlife Service
See National Indian Gaming Commission
See National Park Service
See Reclamation Bureau
See Surface Mining Reclamation and Enforcement Office

Internal Revenue Service
NOTICES
Agency Information Collection Activities; Proposals, Submissions, and Approvals, 21498–21502

International Trade Administration
RULES
Definition of Factual Information and Time Limits for Submission of Factual Information, 21246–21256

International Trade Commission
NOTICES
Antidumping Duty Orders; Five-year Review:
Low Enriched Uranium from France, 21416–21417
Determinations:
Drawn Stainless Steel Sinks from China, 21417–21418

Justice Department
NOTICES
Proposed Consent Decrees under CERCLA, 21418–21419
Proposed Consent Decrees under the Clean Air Act, 21419

Legal Services Corporation
NOTICES
Meetings; Sunshine Act, 21419–21421

Maritime Administration
NOTICES
Small Shipyard Grant Program; Application Deadlines, 21492–21494

Mine Safety and Health Federal Review Commission
See Federal Mine Safety and Health Review Commission

National Aeronautics and Space Administration
NOTICES
Meetings:
NASA Advisory Council; Science Committee; Planetary Protection Subcommittee, 21421–21422

National Indian Gaming Commission
NOTICES
Environmental Impact Statements; Availability, etc.:
Approval of a Gaming Management Contract, 21398–21399

National Institutes of Health
NOTICES
Meetings:
Eunice Kennedy Shriver National Institute of Child Health and Human Development, 21382
National Center for Complementary and Alternative Medicine, 21381–21382
National Human Genome Research Institute, 21382
National Institute of Diabetes and Digestive and Kidney Diseases, 21381

National Oceanic and Atmospheric Administration
NOTICES
Environmental Impact Statements; Availability, etc.:
Effects of Oil and Gas Activities in the Arctic Ocean, 21347
Permits:
Marine Mammals; File No. 17344, 21347–21348

National Park Service
NOTICES
Inventory Completions:
Center for Archaeological Research at the University of Texas at San Antonio, TX, 21399–21400
Central Washington University, Ellensburg, WA, 21401–21403
Department of the Interior, Bureau of Indian Affairs, Univ. of Denver Department of Anthropology and Museum of Anthropology, Denver, CO, 21408–21409
Department of the Interior, National Park Service, Grand Canyon National Park, Grand Canyon, AZ, 21400–21401, 21404–21408
Michigan Department of Transportation, Van Wagoner Building, Lansing, MI, 21409–21410
San Francisco State University NAGPRA Program, San Francisco, CA, 21403–21404
Meetings:
Native American Graves Protection and Repatriation Review Committee, 21410–21411
National Register of Historic Places; Pending Nominations and Related Actions, 21411–21412
Repatriation of Cultural Items:
Arizona State Museum, University of Arizona, Tucson, AZ, 21412–21413
The Field Museum of Natural History, Chicago, IL, 21413–21414

Navy Department
NOTICES
Meetings:
Board of Advisors to Presidents of the Naval Postgraduate School and Naval War College, Naval Postgraduate School Subcommittee, 21349

Nuclear Regulatory Commission
PROPOSED RULES
Station Blackout Mitigation Strategies, 21275–21276

Postal Service
NOTICES
Meetings; Sunshine Act, 21422

Presidential Documents
EXECUTIVE ORDERS
Committees; Establishment, Renewal, Termination, etc.:
Faith-Based and Neighborhood Partnerships, President's Advisory Council on; Extension (EO 13640), 21211

ADMINISTRATIVE ORDERS
Government Agencies and Employees:
Federal Employee Pay Schedules and Rates (Memorandum of April 5, 2013), 21213

Reclamation Bureau
NOTICES
Central Valley Project Improvement Act, Water Management Plans, 21414–21415
Meetings:
Glen Canyon Dam Adaptive Management Work Group, 21415–21416

Securities and Exchange Commission
NOTICES
Applications:
Royce Focus Trust, Inc., et al., 21428–21432
Royce Value Trust, Inc., et al., 21424–21428
TSC Distributors LLC and TSC UITS, 21422–21424
Meetings:
Advisory Committee on Small and Emerging Companies, 21432–21433
Meetings; Sunshine Act, 21433
Self-Regulatory Organizations; Filings:
National Securities Clearing Corp., 21433–21435
Self-Regulatory Organizations; Proposed Rule Changes:
BATS Exchange, Inc., 21447–21449
BATS Exchange, Inc., BATS Y–Exchange, Inc., Chicago Board Options Exchange, Inc., et al., 21483–21485
BATS–Y Exchange, Inc., 21455–21457
Financial Industry Regulatory Authority, Inc., 21449–21452
NASDAQ OMX PHLX LLC, 21482–21483
National Securities Clearing Corp., 21460–21464, 21487–21491
National Stock Exchange, Inc., 21485–21487
New York Stock Exchange LLC, 21457–21460, 21464–21469, 21481–21482
NYSE Arca, Inc., 21436–21441, 21443–21447, 21452–21455, 21475–21481
NYSE MKT LLC, 21441–21443, 21469–21475

Small Business Administration
NOTICES
Conflict of Interest Exemptions:
DeltaPoint Capital IV LP, DeltaPoint Capital IV (New York), LP, 21491
Disaster Declarations:
Rhode Island, 21492
Meetings:
Interagency Task Force on Veterans Small Business Development, 21492

Substance Abuse and Mental Health Services Administration
NOTICES
Agency Information Collection Activities; Proposals, Submissions, and Approvals, 21382–21384

Surface Mining Reclamation and Enforcement Office
NOTICES
Agency Information Collection Activities; Proposals, Submissions, and Approvals, 21416

Surface Transportation Board
NOTICES
Abandonment Exemptions:
Union Pacific Railroad Co. in Washington County, ID, 21494–21495

Transportation Department
See Federal Aviation Administration
See Maritime Administration
See Surface Transportation Board

Treasury Department
See Foreign Assets Control Office
See Internal Revenue Service

U.S. Citizenship and Immigration Services
NOTICES
Agency Information Collection Activities; Proposals, Submissions, and Approvals:
E-Verify Program Data Collections, 21387

U.S. Customs and Border Protection
NOTICES
Country of Origin; Final Determinations:
Certain Ultrasound Systems, 21389–21392
HP LaserJet Enterprise 500 Color Printer and Fax Machine M551, 21387–21389

Veterans Affairs Department
RULES
Grants to States for Construction or Acquisition of State Homes, 21262–21267
NOTICES
Agency Information Collection Activities; Proposals, Submissions, and Approvals:
Women Veterans Healthcare Barriers Survey, 21502

Reader Aids

Consult the Reader Aids section at the end of this page for phone numbers, online resources, finding aids, reminders, and notice of recently enacted public laws.

To subscribe to the Federal Register Table of Contents LISTSERV electronic mailing list, go to http://listserv.access.gpo.gov and select Online mailing list archives, FEDREGTOC-L, Join or leave the list (or change settings); then follow the instructions.

CFR PARTS AFFECTED IN THIS ISSUE

A cumulative list of the parts affected this month can be found in the Reader Aids section at the end of this issue.

3 CFR

Executive Orders:

13640 21211

Administrative Orders:

Memorandums:

Memorandum of April 5, 2013 21213

10 CFR

430 21215

Proposed Rules:

50 21275

52 21275

12 CFR

Ch. X 21218

14 CFR

39 (4 documents) 21227, 21230, 21233, 21236

97 (2 documents) 21239, 21242

Proposed Rules:

39 (2 documents) 21276, 21279

18 CFR

376 21245

19 CFR

351 21246

32 CFR

226 21256

33 CFR

100 21258

165 21260

38 CFR

59 21262

40 CFR

180 21267

Proposed Rules:

52 (3 documents) 21281, 21296, 21302

42 CFR

Proposed Rules:

411 21308

1001 21314

44 CFR

67 (2 documents) 21272, 21273

47 CFR

Proposed Rules:

15 21320

73 21337

Federal Register
Vol. 78, No. 69
Wednesday, April 10, 2013

Presidential Documents

Title 3—

The President

Executive Order 13640 of April 5, 2013

Continuance of Advisory Council

By the authority vested in me as President by the Constitution and the laws of the United States of America, and consistent with the provisions of the Federal Advisory Committee Act, as amended (5 U.S.C. App.), it is hereby ordered as follows:

Section 1. Continuing the President's Advisory Council on Faith-Based and Neighborhood Partnerships. The President's Advisory Council on Faith-Based and Neighborhood Partnerships, as set forth under the provisions of Executive Order 13498 of February 5, 2009, and reestablished by section 5 of Executive Order 13569 of April 5, 2011, is hereby extended and shall terminate 2 years from the date of this order unless further extended by the President.

Sec. 2. *General Provisions.* (a) Nothing in this order shall be construed to impair or otherwise affect:

(1) the authority granted by law to an executive department, agency, or the head thereof; or

(2) the functions of the Director of the Office of Management and Budget relating to budgetary, administrative, or legislative proposals.

(b) This order shall be implemented consistent with applicable law and subject to the availability of appropriations.

(c) This order is not intended to, and does not, create any right or benefit, substantive or procedural, enforceable at law or in equity by any party against the United States, its departments, agencies, or entities, its officers, employees, or agents, or any other person.

THE WHITE HOUSE,
April 5, 2013.

[FR Doc. 2013–08501
Filed 4–9–13; 8:45 am]
Billing code 3295–F3

Presidential Documents

Memorandum of April 5, 2013

Federal Employee Pay Schedules and Rates That Are Set by Administrative Discretion

Memorandum for the Heads of Executive Departments and Agencies

Section 1112 of the Consolidated and Further Continuing Appropriations Act, 2013 (Public Law 113–6), reflects the Congress's decision to continue to deny statutory adjustments to any pay systems or pay schedules covering executive branch employees. In light of the Congress's action, I am instructing heads of executive departments and agencies to continue through December 31, 2013, to adhere to the policy set forth in my memoranda of December 22, 2010, and December 21, 2012, regarding general increases in pay schedules and employees' rates of pay that might otherwise take effect as a result of the exercise of administrative discretion.

This memorandum shall be carried out to the extent permitted by law and consistent with executive departments' and agencies' legal authorities. This memorandum is not intended to, and does not, create any right or benefit, substantive or procedural, enforceable at law or in equity by any party against the United States, its departments, agencies, or entities, its officers, employees, or agents, or any other person.

The Director of the Office of Personnel Management shall issue any necessary guidance on implementing this memorandum, and is also hereby authorized and directed to publish this memorandum in the **Federal Register.**

THE WHITE HOUSE,

Washington, April 5, 2013

[FR Doc. 2013–08523

Filed 4–9–13; 8:45 am]

Billing code 6325–01

Rules and Regulations

Federal Register
Vol. 78, No. 69
Wednesday, April 10, 2013

This section of the FEDERAL REGISTER contains regulatory documents having general applicability and legal effect, most of which are keyed to and codified in the Code of Federal Regulations, which is published under 50 titles pursuant to 44 U.S.C. 1510.

The Code of Federal Regulations is sold by the Superintendent of Documents. Prices of new books are listed in the first FEDERAL REGISTER issue of each week.

DEPARTMENT OF ENERGY

10 CFR Part 430

[Docket No. EERE–BT–PET–0053]

Energy Conservation Program for Consumer Products: Association of Home Appliance Manufacturers Petition for Reconsideration

AGENCY: Office of Energy Efficiency and Renewable Energy, Department of Energy.

ACTION: Notice of denial of petition for reconsideration.

SUMMARY: This document announces the U.S. Department of Energy's (DOE) denial of a petition from the Association of Home Appliance Manufacturers (AHAM) requesting reconsideration of DOE's final rule to amend the test procedures for residential dishwashers, dehumidifiers, and conventional cooking products, as well as the direct final rule to amend energy conservation standards for dishwashers.

DATES: This denial is effective April 10, 2013.

ADDRESSES: *Docket:* For access to the docket to read the petition or comments received thereon, go to the *Federal eRulemaking Portal* at *http://www.regulations.gov/#!docketDetail;D=EERE-2012-BT-PET-0053.* In addition, electronic copies of the Petition are available online at DOE's Web site at *http://www1.eere.energy.gov/buildings/appliance_standards/current_rulemakings-notices.html.* For access to the docket for DOE's direct final rule to amend energy conservation standards for dishwashers, go to the *Federal eRulemaking Portal* at *http://www.regulations.gov/#!documentDetail;D=EERE-2011-BT-STD-0060-0005.* For access to the docket for the final rule to amend the test procedures for residential dishwashers, dehumidifiers, and conventional cooking products, go to the *Federal eRulemaking Portal* at *http://www.regulations.gov/#!documentDetail;D=EERE-2010-BT-TP-0039-0040.*

FOR FURTHER INFORMATION CONTACT:

Stephen Witkowski, U.S. Department of Energy, Office of Energy Efficiency and Renewable Energy, Building Technologies Program, EE–2J, 1000 Independence Avenue SW., Washington, DC 20585–0121, (202) 586–7892, or email: *Stephen.Witkowski@ee.doe.gov.*

Elizabeth Kohl, U.S. Department of Energy, Office of General Counsel, GC–71, 1000 Independence Avenue SW., Washington, DC 20585, (202) 586–7796, email: *Elizabeth.Kohl@hq.doe.gov.*

SUPPLEMENTARY INFORMATION: This notice involves a petition by AHAM for reconsideration of DOE's final test procedure rule to amend the test procedures for dishwashers, dehumidifiers, and conventional cooking products (77 FR 65942, Oct. 31, 2012) and its direct final rule to amend the energy conservation standards applicable to dishwashers (77 FR 31918, May 30, 2012; 77 FR 59712, Oct. 1, 2012).[1] Specifically, AHAM requested that DOE stay the effectiveness of the test procedure final rule and final standards rule until DOE either: (1) Revises the standards in the final standards rule to account for the impact on measured energy resulting from test procedure amendments to measure fan-only mode and standby and off mode energy use; or (2) delays requirements regarding measurement of fan-only mode and standby and off mode energy use until promulgation of a revised standard for dishwashers. After carefully considering AHAM's request and the comments submitted in response to publication of the petition for comment, DOE declines to grant the request.

I. AHAM Petition Summary

In support of its request, AHAM asserts that the test procedure amendments for fan-only mode and standby and off mode energy use impact the measured energy use of dishwashers. As a result, AHAM states that the Energy Policy and Conservation Act of 1975 (EPCA), as amended, requires DOE to adjust the stringency of the energy conservation standards in the direct final rule accordingly or delay compliance with those test procedure amendments until a subsequent amended standard is promulgated for dishwashers. AHAM acknowledges that the standards established in the direct final rule were submitted to DOE in a consensus agreement to which it was a party and adopted pursuant to DOE's authority at 42 U.S.C. 6295(p)(4).

A. Fan-Only Mode

In support of AHAM's contention that the fan-only mode test procedure revisions require an adjustment of the standard, AHAM cited DOE's conclusion that measurement of fan-only mode energy use would increase the measured energy use of the dishwasher by 0.4–17 kilowatt-hours per year (kWh/year). In addition, AHAM cited a statement from a supplemental notice of proposed rulemaking (SNOPR) that the higher end of the range is greater than 5 percent of the maximum allowable annual energy consumption for a standard dishwasher. (77 FR 31444, May 25, 2012) (May 2012 SNOPR). (DOE notes that the percentage cited in the May 2012 SNOPR references the 355 kWh per year standard applicable to standard dishwashers until May 30, 2013. The statement should therefore read ''less'' than 5 percent because 17 kWh/year represents 4.8 percent of 355 kWh/year.)[2] AHAM stated that this conclusion was unchanged when DOE proposed a less burdensome method to measure the energy use in fan-only mode in response to public comment (77 FR 49064, Aug. 15, 2012) (August 2012 SNOPR). AHAM also stated that it collected data showing that measuring fan-only mode energy use would add a shipment-weighted average of 0.29 kWh per year in measured energy. According to AHAM, this increase in energy use could add up to 2 percent of the 2013 standard in measured energy for some models.

AHAM asserted that notwithstanding DOE's arguments that the energy use in

[1] DOE Docket No. EERE–2010–BT–TP–0039, 11/30/12, *http://www.regulations.gov/#!docketDetail;D=EERE-2012-BT-PET-0053.*

[2] In addition, DOE emphasizes, as discussed in Section III of this notice, that adjustments, if any, required under 42 U.S.C. 6293(e)(2) would be made based on the average change in measured energy use. According to AHAM's data, this shipment adjusted average would be only a 0.29 kWh per year change, or 0.1 percent of the energy use for standard dishwashers allowed under the standards established in the direct final rule.

fan-only mode is *de minimis*—the fan-only mode energy use is estimated to be less than 5 percent of the total energy use of standard dishwashers, and 65 percent of dishwashers currently on the market meet the amended energy conservation standards adopted in the direct final rule—DOE is still required to ensure that the stringency of the amended standards adopted in the direct final rule remains unchanged. AHAM argued that DOE has not explained what it considers to be *de minimis,* and that Congress did not provide a *de minimis* exception to the standards amendment requirements in 42 U.S.C. 6293. AHAM also pointed out that the stakeholders to the consensus agreement, upon which the standards in the direct final rule were based, stated that if DOE amended the test procedure prior to the compliance date of the agreed-to standards, the stakeholders would recommend that DOE translate the standards to equivalent levels specified under revised test procedures, as specified in 42 U.S.C. 6293(e).

B. Standby and Off Mode

In support of AHAM's contention that the standby and off mode test procedure revisions require an adjustment of the standard, AHAM noted DOE's conclusion that while DOE did not expect the estimated annual energy use (EAEU) or estimated annual energy cost to be significantly affected by the proposed amendments to measure standby and off mode energy use, integrating such energy use into the overall efficiency metric would produce a measureable difference in EAEU (Public Meeting Transcript, Dec. 17, 2010).[3] AHAM also disagreed with DOE's conclusion, reiterated in the September 2011 SNOPR, that the proposed standby and off mode amendments would not measurably alter the existing energy efficiency and energy use metrics for dishwashers (76 FR 58346, 58355, Sept. 20, 2011). AHAM stated that because the proposed amendments change what energy will be measured (*i.e.,* the end of cycle energy, including cycle finished mode, would be measured under the proposed revisions), DOE should amend the standards to account for this change. AHAM also stated that it collected data showing that measuring standby and off mode energy use would add a shipment-weighted average of 1.10 kWh per year. In addition, because the 1.10 kWh is an average, AHAM stated that some manufacturers will be more significantly affected.

As with fan-only mode, AHAM pointed out that the stakeholders to the consensus agreement, upon which the standards in the direct final rule were based, agreed that if the test procedure were amended, the stakeholders would recommend that DOE translate the standards to equivalent levels specified under revised test procedures, as specified in 42 U.S.C. 6293(e). In addition, AHAM asserted that DOE took this approach in establishing revised standards for room air-conditioners and clothes dryers in its direct final rule establishing amended energy conservation standards (76 FR 22454, Apr. 21, 2011; 76 FR 52854, Aug. 24, 2011).

II. Discussion of Comments Received

DOE published AHAM's petition for comment on December 31, 2012 (77 FR 76952). DOE received five comments on the petition. These comments and DOE's responses are set forth in the paragraphs that follow.

BSH Home Appliances Corporation (BSH)[4] and General Electric Appliances (GE)[5] supported AHAM's petition and stated that DOE should determine the impacts on measured energy use resulting from the test procedure and adjust the applicable standards levels accordingly. BSH commented further that the impacts of the new standby power measurement ranged from 0–21 kWh/year for the BSH models tested, which BSH stated was not ''*de minimis*''.[6] BSH also stated that DOE should recognize: (1) Any reduction in energy consumption will have an influence on cleaning performance; (2) Changes in product ratings are expensive, difficult to manage on sales floors and cause confusion to the consumer and to rebate programs; (3) The changes could cause some units to fall off of the ''Energy Star'' list, which may result in discontinuing production of the impacted models and increased cost.

Further analysis of DOE's *de minimis* conclusion in light of the data submitted by AHAM and BSH, as well as DOE's analysis concerning the appropriateness of adjusting the energy conservation standard levels established in the direct final rule is set forth in Section III of this notice. In the paragraphs that follow, DOE provides information developed during the test procedure rulemaking in support of the *de minimis* conclusion and responds to the related comments offered by BSH.

For standby and off mode energy use, DOE proposed to measure such energy use in the December 2010 proposed test procedure amendments using IEC Standard 62301 ''Household electrical appliances—Measurement of standby power,'' First Edition 2005–06 (IEC 62301). 75 FR 75290 (Dec. 2, 2010). In the September 2011 SNOPR, DOE proposed to measure such energy use using the Second Edition of IEC 62301, as recommended by commenters. 76 FR 58346 (Sept. 20, 2011). DOE analyzed the change in measured energy use, if any, that would occur as a result of these proposed changes and concluded that these amendments would not measurably alter the energy use of dishwashers. 75 FR 75290, 75316–17; 76 FR 58346, 58355 (Dec. 2, 2010).

For fan-only mode energy use, DOE proposed a method to measure such energy use in the May 2012 SNOPR (71 FR 31444, 31447) and proposed an alternative method to measure such energy use in the August 2012 SNOPR based on comments received from interested parties, including manufacturers (77 FR 49064, 49067). DOE determined that the energy use measured in fan-only mode would represent less than 5 percent of the total energy use of standard dishwashers. Given that 65 percent of all standard dishwashers currently on the market meet or exceed the minimum energy conservation standards established in the direct final rule, inclusion of this small amount of energy use would have virtually no impact on compliance with the revised standard. As a result, DOE determined that the energy use in fan-only mode is *de minimis* and insufficient to alter in a material manner the measured energy use of dishwashers. 77 FR 65942, 65947 (Oct. 31, 2012).

In response to BSH's other comments, DOE considered impacts to consumer utility in adopting the standards established in the direct final rule and concluded that the standards adopted in that rule would not impact product utility. 77 FR 31918, 31956–57 (May 30, 2012). In addition, DOE takes no position on the business or marketing decisions made by manufacturers in response to amendments to applicable

[3] DOE held the public meeting to discuss its notice of proposed rulemaking to amend the test procedure for dishwashers, dehumidifiers and conventional cooking products (75 FR 75920, Dec. 2, 2010) (December 2010 NOPR).

[4] DOE Docket No. EERE–2012–BT–PET–0053, Comment 3, January 30, 2013.

[5] DOE Docket No. EERE–2012–BT–PET–0053, Comment 7, January 31, 2013.

[6] BSH also commented regarding the test procedure provisions for measuring the energy used during water softener regeneration. As stated in DOE's final test procedure rule, manufacturers have been required to measure this energy (and water) use to demonstrate compliance with existing standards. 77 FR 65942, 65946–47 (Oct. 31, 2012). As a result, such energy and water use would not be considered in determining whether standards adjustments may be required under 42 U.S.C. 6293(e).

DOE regulations, including whether to discontinue models that no longer meet ENERGY STAR standards. DOE further notes that changes to the ENERGY STAR compliance of certain models can occur with any amendment of DOE's energy conservation standards and are not specific to DOE's amendments to the standards for dishwashers in the direct final rule.

The California IOUs (Pacific Gas and Electric Company, Southern California Gas Company, San Diego Gas and Electric, and Southern California Edison) and a number of energy efficiency advocates and consumer groups (Appliance Standards Awareness Project, American Council for an Energy Efficient Economy, Alliance to Save Energy, Consumer Federation of America, Natural Resources Defense Council, Northwest Energy Efficiency Alliance, Northwest Power and Conservation Council, and Earthjustice, hereinafter referred to as the ''Joint Commenters'') opposed staying the effective date of the direct final rule. These commenters also stated that if manufacturers provide data documenting non-compliance with the standard as a result of the test procedure changes, DOE could stay those portions of the test procedure specified in AHAM's petition.

The Joint Commenters also stated that AHAM has not shown that DOE was incorrect in concluding that any impact on measured energy consumption would be *de minimis*. Based on AHAM's data, the Joint Commenters concluded that the change in measured energy use as a result of the disputed test procedure provisions would only be one-half of one percent of the new standard levels, rather than the two percent noted by AHAM. In addition, because any adjustment to the standard pursuant to 42 U.S.C. 6293(e) would be made based on averages, the Joint Commenters concluded that any products that fall out of compliance with the new standards due to their significantly above-average fan-only and standby and off mode energy use would still be non-compliant even if DOE adjusted the standards. The Joint Commenters also offered that EPCA, as amended, does not authorize DOE to amend the standards in response to AHAM's petition because the test procedure rulemaking had concluded.

As explained in Section III of this notice, DOE declines to grant AHAM's request to stay the effective date of the standards established in the direct final rule until DOE: (1) Revises the standards in the final standards rule to account for the impact on measured energy resulting from test procedure amendments to measure fan-only mode and standby and off mode energy use; or (2) delays requirements regarding measurement of fan-only mode and standby and off mode energy use until promulgation of a revised standard for dishwashers. As part of this determination, DOE maintains its conclusion that the energy use in fan-only and standby and off mode is *de minimis*. DOE welcomes data on dishwasher performance under the amended test procedure at any time. Given DOE's conclusions, DOE does not reach the Joint Commenter's argument concerning compliance with 42 U.S.C. 6293(e) once a test procedure rulemaking has been completed.

DOE also received a comment from a private citizen asserting the need for energy efficient appliances as soon as possible at a reasonable cost. The commenter recommended that the Federal government provide incentives to the American manufacturers to produce these products. This comment is outside the scope of DOE's response to the AHAM petition.

III. Legal Analysis and Decision

EPCA requires DOE to determine to what extent, if any, proposed test procedure amendments would alter the measured energy efficiency, energy use, or water use of any covered product as determined under the existing test procedure. 42 U.S.C. 6293(e)(1). If DOE determines that the amended test procedure will alter the measured energy efficiency, energy use, or water use of a covered product, DOE must amend the applicable energy conservation standard. The amended standard is calculated as the average of the energy efficiency, energy use, or water use determined by testing a representative sample of products that minimally comply with the existing standard using the amended test procedure. 42 U.S.C. 6293(e)(2).[7] DOE's authority to amend energy conservation standards does not affect DOE's obligation to issue final rules as described in 42 U.S.C. 6295. 42 U.S.C. 6293(e)(4).

In applying these provisions to the energy conservation standards adopted in the direct final rule for dishwashers, DOE determined that no adjustment to the standard levels was warranted because the changes in measured energy use resulting from the test procedure amendments for the measurement of fan-only mode and standby and off mode energy use were *de minimis* and, therefore, the extent of change in measured energy use, if any, would not materially alter the standard levels.

AHAM argues in its petition that DOE must grant the requested relief, either adjusting the standard levels established in the direct final rule or delaying compliance with the test procedure provisions for measuring energy use in fan-only mode and standby and off mode, because Congress did not provide a *de minimis* exception to the requirements of 42 U.S.C. 6293(e)(2). In response, DOE emphasizes that 42 U.S.C. 6293(e)(1) requires DOE to determine ''to what extent, if any'' the proposed test procedure would alter the measured energy efficiency or energy or water use of a covered product. This provision, requiring DOE to determine ''the extent'', if any, of any alteration in measured energy use, means the provision must apply only beyond some minimum amount. That is, there would be no reason for the Secretary to determine ''the extent'' of the change if any alteration in measured energy use would trigger the requirements of 42 U.S.C. 6293(e)(2). Thus, DOE has the discretion to determine that the amount of change in measured energy use is so insignificant that the standard would not be materially altered. As such, when DOE determines the change in measured energy use is *de minimis,* amendment of the standard under 42 U.S.C. 6293(e)(2) would serve no purpose and would therefore not be required.

As noted in Section II of this notice, DOE analyzed the change in measured energy use, if any, that would occur as a result of the proposed changes to the measurement of standby mode and off mode energy use, and fan-only mode energy use. As discussed in the paragraphs that follow, DOE determined that the data submitted by manufacturer commenters does not change the conclusion that measurement of the energy use in fan-only mode and standby and off mode is insufficient to materially alter the measured energy use of dishwashers and therefore does not require an adjustment of the energy conservation standards established in the direct final rule.

DOE estimated fan-only mode energy use at 0.4–17 kWh per year, which even at the high end of the range is less than 5 percent of the energy use of standard dishwashers. DOE emphasizes, and agrees with the point made by the Joint Commenters, that a standards

[7] EPCA also states that models of covered products in use before the date on which the amended standard becomes effective (or revisions of such models that have the same energy efficiency, energy use, or water use characteristics) that comply with the energy standard applicable to those products are deemed to comply with the amended standard. 42 U.S.C. 6293(e)(3). Because DOE determined that amended standards were not warranted, this provision does not apply in this case.

adjustment required by 42 U.S.C. 6293(e)(2) would be based on the average change in measured efficiency, which would be less than the high end of the range estimated by DOE. In fact, based on the data AHAM collected, fan-only mode energy use would represent an estimated 0.29 kWh per year for a shipment-weighted average, which is less than the lower end of the range calculated by DOE and represents roughly only 0.1 percent of the energy use for standard dishwashers allowed under the standards established in the direct final rule. DOE assumes that the 2 percent increase in energy use cited by AHAM in its petition refers to units that used more than the shipment-weighted average energy use in fan-only mode. As noted, if any adjustment to an energy conservation standard were determined necessary under 42 U.S.C. 6293(e)(2), the adjustment would be based on the average change in measured efficiency, or the 0.1 percent figure. The data submitted by AHAM are therefore insufficient to change DOE's conclusion that the energy use in fan-only mode is *de minimis*.

DOE estimates standby and off mode energy use at 2 percent of total energy use of a standard dishwasher. As noted in the test procedure rulemaking and in Section II of this notice, DOE further estimated that the test procedure amendments made for appendix C1 would not materially alter that measured energy use. AHAM collected data showing that the updated test procedure for measuring standby and off mode energy use in Appendix C1 would add a shipment-weighted average of 1.10 kWh per year. BSH submitted data indicating that standby and off mode energy use could add up to 21 kWh per year for the BSH models tested. AHAM's figure of 1.10 kWh/year is only 0.4 percent of the May 2013 standard level for standard dishwashers. DOE notes that the BSH estimate of an additional 21 kWh per year of standby and off mode energy use would represent an increase in low-power mode consumption of 2 to 3 Watts compared to the standby power measured according to Appendix C, which is at least three times the maximum inactive or off mode power consumption that DOE measured in its sample of 14 dishwashers tested for the December 2010 proposed test procedure amendments. DOE also notes that its statement about a measurable difference in EAEU at the public meeting, noted in Section II of this notice, was meant to convey that integration of the standby and off mode energy use into the overall efficiency metric pursuant to 42 U.S.C. 6295(gg)(3) would still allow for calculation of this energy use, even though the energy use measurement was very small. After considering the data submitted by commenters, DOE maintains its conclusion that the amendments to measure standby and off mode energy use would not measurably alter the energy use of dishwashers.

AHAM also argues in its petition that DOE must adjust the standard levels established in the direct final rule or delay compliance with the test procedure provisions for measuring energy use in fan-only mode and standby and off mode because it has not provided a definition of *de minimis.* DOE does not believe that it is necessary or appropriate to, for example, specify an amount or percentage of energy use that would be *de minimis*. Such a concept necessarily depends on factors such as the product at issue, the total amount of energy used by the product, and the test procedure change at issue.

DOE has determined in at least one instance that adjustment of the standard levels based on test procedure amendments was warranted. As AHAM noted, in the direct final rule establishing energy conservation standards for clothes dryers and room air conditioners, DOE adjusted the standard for clothes dryers based on its estimate of the increase in average energy factor that would result from use of the amended test procedure, which ranged from 10.3–22.5 percent (77 FR 22454, 22477, Apr. 21, 2011). This range is significantly larger than the percentage increase DOE estimated for the dishwasher rule and the average percentage increase that AHAM estimated—0.29 kWh/year for fan-only mode and 1.10 kWh/year for standby and off mode, which represent in total approximately 0.45 percent of the May 2013 standards for dishwashers.

Regarding DOE's statement that 65 percent of standard dishwashers on the market would meet the standards established in the direct final rule, DOE intended to convey that the standard adopted in the direct final rule, which represented the maximum improvement in energy efficiency that was technologically feasible and economically justified, was not so stringent that only a very small percentage of dishwashers would comply. In such a case, DOE might consider whether a smaller change in measured energy use could trigger the requirements of 42 U.S.C. 6293(e)(2).

Even if DOE had determined that the change in measured energy use as a result of test procedure provisions for the measurement of standby and off mode energy use were not *de minimis,* DOE could not adjust the standard to account for the increase in measured energy use, which would result in lowering the current standard by a corresponding amount. Such an adjustment would be prohibited by EPCA's anti-backsliding provision, set forth in 42 U.S.C. 6295(o)(1). DOE's authority to amend energy conservation standards in 42 U.S.C. 6293(e) specifically does not affect DOE's obligation to issue any final rules as described in 42 U.S.C. 6295, including adherence to the anti-backsliding provision in 6295(o)(1). 42 U.S.C. 6293(e)(4).[8]

As a result of the above analysis, and in consideration of AHAM's petition and the comments received thereon, DOE declines to grant the petition.

Issued in Washington, DC on April 4, 2013.

Kathleen B. Hogan,

Deputy Assistant Secretary for Energy Efficiency, Energy Efficiency and Renewable Energy.

[FR Doc. 2013–08350 Filed 4–9–13; 8:45 am]

BILLING CODE 6450–01–P

[8] DOE notes that if a test procedure amendment would account for less energy use, thus raising the standard by some amount that DOE determined was not *de minimis,* 42 U.S.C. 6293(e)(3) would ''grandfather'' existing models in use on or before the date on which the amended energy conversation standard becomes effective (or revisions of such models that have the same energy efficiency, energy use or water use characteristics) that complied with the standard prior to the test procedure amendments that raised the standard.

BUREAU OF CONSUMER FINANCIAL PROTECTION

12 CFR Chapter X

[Docket No. CFPB–2012–0023]

Disclosure of Consumer Complaint Data

AGENCY: Bureau of Consumer Financial Protection.

ACTION: Final Policy Statement.

SUMMARY: The Bureau of Consumer Financial Protection (Bureau) is issuing a final policy statement (Policy Statement) to provide guidance on how the Bureau plans to exercise its discretion to publicly disclose certain consumer complaint data that do not include personally identifiable information. The Bureau receives complaints from consumers under the terms of Title X of the Dodd-Frank Wall Street Reform and Consumer Protection Act (Dodd-Frank Act). The Policy Statement also identifies additional ways that the Bureau may disclose consumer complaint data but as to

which it will conduct further study before finalizing its position.

DATES: This Policy Statement is effective on March 25, 2013.

FOR FURTHER INFORMATION CONTACT: Scott Pluta, Office of Consumer Response, Bureau of Consumer Financial Protection, at (202) 435–7306.

SUPPLEMENTARY INFORMATION:

I. Overview

A. Final Policy Statement

Under the final Policy Statement,[1] the Bureau extends its existing practices of disclosing data associated with consumer complaints about credit cards.[2] The Bureau plans to add to its consumer complaint public database—which contains certain fields for each unique [3] complaint [4]—complaints about other types of consumer financial products and services. The Bureau plans to continue the issuance of its own periodic reports about complaint data. To date, the Bureau has issued eight such reports.[5] The public database will include data from certain consumer complaints submitted on or after December 1, 2011.[6] These disclosures are intended to help provide consumers with ''timely and understandable information to make responsible decisions about financial transactions'' and to ensure that markets for consumer financial products and services ''operate transparently and efficiently.'' [7]

II. Background

A. Complaint System

In its Proposed Complaint Data Disclosure Policy Statement, the Bureau generally described how the Office of Consumer Response (''Consumer Response'') accepts and processes consumer complaints (collectively the ''Complaint System'').[8] That system has been refined over time, but its core processes remain the same.[9]

B. Overview of Public Comments

In its Proposed Complaint Data Disclosure Policy Statement, the Bureau proposed to extend its existing disclosure practices described in the Final Credit Card Data Disclosure Policy Statement to apply to other complaint data. The Bureau noted that the basic structure of the credit card data disclosure policy, including the public database, could be duplicated for other consumer products and services in addition to credit cards. The Bureau also observed that the purposes underlying the Final Credit Card Data Disclosure Policy Statement would apply to this extension, and the legal authority to disclose the data in the public database and in the Bureau's own reporting is likewise the same.

The Bureau received 26 unique sets of comments in response to its Notice of Proposed Complaint Data Disclosure Policy Statement. Fifteen industry groups submitted letters. One financial reform coalition submitted a single set of comments on behalf of 22 consumer, civil rights, privacy, and government groups. One mortgage provider, a financial services provider, and an online social network submitted comments. Finally, five consumers submitted comments.

Almost all comments concerned expansion of the public database component of the Proposed Complaint Data Disclosure Policy Statement. Many of these comments generally reiterated comments submitted in response to the Proposed Credit Card Complaint Disclosure Policy Statement. Industry commenters generally opposed the inclusion of additional complaint data in the public database, and reiterated opposition to the database itself. Although they endorsed the intended goals of the public database, many industry commenters asserted that the database would confuse consumers and unfairly damage the reputation of companies. Several trade associations commented that the database is contrary to the Bureau's mission to help consumers and to promote the transparency and efficiency of markets for consumer financial products and services. Some commenters specifically noted their support for the Bureau's work to help educate consumers through supplying timely and comprehensive information to make informed decisions about their financial transactions and the companies they choose to work with, but stated that complaints are best handled by the parties themselves.

The disclosure of company names in the public database was a particular focus of these comments, as was normalization or the use of some metric to provide context for data—by, for example, including information on the number of accounts a company has for each particular product or service. Some industry commenters reiterated comments that the Bureau lacks legal authority to disclose individual-level complaint data. One commenter reiterated opposition to the database and disclosure of any complaint data, asserting that Congress intended the complaint function to ensure that the Bureau has knowledge of the consumer

---

[1] The Bureau has issued several policy statements and requests for comment regarding its disclosure of consumer complaint data. These are: *Disclosure of Certain Credit Card Complaint Data* (Notice of proposed policy statement with request for comment), 76 FR 76628 (Dec. 8, 2011) (Proposed Credit Card Complaint Data Disclosure Policy Statement); *Disclosure of Certain Credit Card Complaint Data* (Notice of final policy statement), 77 FR 37558 (June 22, 2012) (Final Credit Card Complaint Data Disclosure Policy Statement); and *Disclosure of Consumer Complaint Data* (Notice of proposed policy statement), 77 FR 37616 (June 22, 2012) (Proposed Complaint Data Disclosure Policy Statement).

[2] The existing practices are described in the Final Credit Card Complaint Data Disclosure Policy Statement. To the extent there is any conflict between this Policy Statement and the Final Credit Card Complaint Data Disclosure Policy Statement, this Policy Statement controls.

[3] The database will not include duplicative complaints submitted by the same consumer.

[4] The Policy Statement concerns the Bureau's authority to make public certain consumer complaint data that it has decided to include in the public database in its discretion. The Policy Statement does not address the Bureau's authority or obligation to disclose additional complaint data pursuant to a request made under the Freedom of Information Act, 5 U.S.C. 522.

[5] These are: *Annual Report of the CFPB Student Loan Ombudsman* (October 16, 2012) at *http://files.consumerfinance.gov/f/201210_cfpb_Student-Loan-Ombudsman-Annual-Report.pdf; Consumer Response: A Snapshot of Complaints Received* (October 10, 2012) at *http://files.consumerfinance.gov/f/201210_cfpb_consumer_response_september-30-snapshot.pdf; Annual Report of the Consumer Financial Protection Bureau Pursuant to Section 1017(e)(4) of the Dodd-Frank Act* (July 2012) at *http://files.consumerfinance.gov/f/201207_cfpb_report_annual-to-house-appropriations-committee.pdf; Semi-Annual Report of the Consumer Financial Protection Bureau: January 1–June 30, 2012* (July, 2012) at *http://files.consumerfinance.gov/f/201207_cfpb_Semi-Annual_Report.pdf; Consumer Response: A Snapshot of Complaints Received* (June 19, 2012) at *http://files.consumerfinance.gov/f/201206_cfpb_shapshot_complaints-received.pdf; Consumer Response Annual Report: July 21–December 31, 2011* (March 31, 2012) at *http://files.consumerfinance.gov/f/201204_cfpb_ConsumerResponseAnnualReport.pdf; Semi-Annual Report of the Consumer Financial Protection Bureau: July 21–December 31, 2011* (January 30, 2012) at *http://files.consumerfinance.gov/f/2012/01/Congressional_Report_Jan2012.pdf;* and *Consumer Response Interim report on CFPB's credit card complaint data* (November 30, 2011) at *http://files.consumerfinance.gov/f/reports/CFPB%20Consumer%20Response%20Interim%20Report%20on%20Credit%20Card%20Complaint%20Data.pdf.*

[6] Credit card complaint data will be included from December 1, 2011. Mortgage complaint data likewise will be included from December 1, 2011, the date the Bureau began accepting such complaints. Complaint data on bank accounts and services, private student loans, and other consumer loans will be included from March 1, 2012, the date the Bureau began accepting these types of complaints. The database will not include complaints received by the Bureau prior to the dates it began accepting those types of complaints.

[7] 12 U.S.C. 5511(b)(1) & (5).

[8] *Disclosure of Consumer Complaint Data* (Notice of proposed policy statement), 77 FR 37616, 37617 (June 22, 2012).

[9] Complaints may also be subject to further investigation by Consumer Response or follow-up by other parts of the Bureau. The Complaint System is described in more detail in a number of Bureau reports, including the *Consumer Response Annual Report for 2011* (March 31, 2012) at: *http://files.consumerfinance.gov/f/201204_cfpb_ConsumerResponseAnnualReport.pdf.*

financial markets, not the public generally.

Consumer groups and consumers endorsed the goals underlying the public database proposal. The submission from the financial reform coalition on behalf of 22 consumer, civil rights, privacy, and government groups supported the existence and expansion of the public database, citing the data publication as a public service and a way to fulfill the Bureau's affirmative disclosure requirements under FOIA. Those groups also urged the Bureau to publicly disclose consumers' narratives and companies' response narratives. Other groups commented that the Bureau should carefully weigh privacy concerns associated with expanding the fields disclosed.

Many submissions included comments directed to the Bureau's method of processing consumer complaints, *i.e.,* the Complaint System. To the extent that these comments also relate to the final Policy Statement, the Bureau addresses them below. To the extent that they relate only to the Complaint System and not to any associated impact on disclosure, the Bureau does not address them in this final Policy Statement. In response to such feedback, however, Consumer Response has and will continue to refine and improve its Complaint System over time.[10]

III. Summary of Comments Received, Bureau Response, and Resulting Policy Statement Changes

This section provides a summary of the comments received by subject matter. It also summarizes the Bureau's assessment of the comments by subject matter and, where applicable, describes the resulting changes that the Bureau is making in the final Policy Statement. All such changes concern the public database. There are no changes to the policy regarding the Bureau's issuance of its own complaint data reports.

A. The Policy Statement Process

Several trade associations commented that, each time the Bureau intends to add complaints to the public database about a certain type of consumer financial product or service, it should provide the opportunity to comment prior to doing so.

Consumer Response already maintains several feedback mechanisms for stakeholders, and has conducted specific outreach to companies, consumer groups, and trade associations to obtain feedback prior to beginning to accept new types of complaints (and therefore before inclusion in the public database). One trade association noted its support of the Bureau's feedback process and engagement with regulated entities. The Bureau will also delay publication of complaints about categories of products or services other than those immediately subject to this policy[11] until a reasonable period of time has lapsed in order to evaluate the data and consider whether any product- or service-specific policy changes are warranted.

The Bureau is committed to transparency and robust engagement with the public regarding its actions. Although not required by law to do so, the Bureau solicited and received public comment on the Proposed Complaint Data Disclosure Policy Statement. The Bureau received substantial public feedback expressing a range of viewpoints, and it has carefully considered the comments received, as described in detail below including comments specific to the expansion of the database to particular consumer financial markets. As stated in the final Policy Statement, the Bureau plans to study the effectiveness of its policy on an ongoing basis, and plans to continue to engage with the public, including regulated entities, as it assesses the efficacy of its complaint disclosure policy.[12]

B. Legal Authority for Public Database

In its Final Credit Card Data Disclosure Policy Statement, the Bureau addressed in detail several arguments related to the Bureau's authority to establish a public database. Several comments in response to the Proposed Complaint Data Disclosure Policy Statement implicate the same arguments concerning the Bureau's legal authority. For example, several trade associations reiterated claims that the public database and individual-level complaint data disclosure are inconsistent with the Freedom of Information Act (FOIA) and the Trade Secrets Act. A financial reform organization and 22 consumer groups, civil rights, privacy, and government groups specifically noted their disagreement with those comments and asserted that the Bureau not only has the authority but also may have an obligation to create the public database in order to meet its affirmative disclosure requirements under FOIA and the Bureau's own regulations. The Bureau stands by its previous statements and analysis on this issue.[13]

C. The Impact of the Public Database on Consumers

Comments from consumer groups, privacy groups, and consumers contended that the public database empowers consumers to better understand and detect instances of unfair or deceptive practices, and identifies companies that prioritize customer service and alleviate problems up front by helping consumers avoid ''bad actors.'' They further asserted that the addition of data on other products and services will extend and enhance these benefits of the database. Several contended that disclosure is one of the best tools government agencies can use to improve the operation of consumer financial markets and the consumer experience. They argued that consumers can draw their own conclusions from the public database, and endorsed its accessibility and adaptable architecture. Several stated that the data do not need to be fully verified nor randomly generated to be of potential use to outside parties, and they contended that the data can serve to help consumers and advocates detect trends of unfair, deceptive, or abusive acts and practices.

Industry commenters, by contrast, mainly asserted that the publication of additional complaint data in the public database would mislead consumers because the data would be unverified, unrepresentative, lacking in context, and open to manipulation.[14] In addition, several industry commenters did not appear to be aware that the Complaint System affords companies the opportunity to alert the Bureau if they are unable to verify the commercial relationship with the consumer who filed the complaint or believe the complaint was from an unauthorized third party, and that, in such circumstances, the Bureau will withhold such complaints from publication. Each of these general

[10] Consumer Response already maintains several feedback mechanisms for participants in the Complaint System and has plans to expand its feedback and customer satisfaction channels.

[11] See note 6, *supra.*

[12] The Project On Government Oversight highlighted the Bureau's collaborative work to engage the public in policymaking in its recent report entitled *Highlighted Best Practices for Openness and Accountability,* featuring the Bureau as a noteworthy model that could be replicated government-wide.

[13] *Disclosure of Certain Credit Card Complaint Data* (Notice of final policy statement), 77 FR 37558, *supra* at 37560–37561 (June 22, 2012).

[14] It is worth noting that the Bureau was recently recognized by the Administrative Conference of the United States (ACUS) for agency best practices. Specifically, the Bureau received honorable mention for the ACUS Walter Gellhorn Innovation Award for the Consumer Complaint Database for the innovative and transparent use of an online searchable database to empower consumers. The award honors the degree of innovation, cost savings to the government or the public, the ease of duplicating the best practices at other agencies, and the degree to which the best practices enhance transparency and efficiency in government.

assertions is addressed below. Section D addresses industry comments that disclosure of particular data fields—company name, zip code, complaint type, and discrimination fields—would be especially inappropriate or misleading.

1. Verification

Several trade associations commented that the Bureau should not disclose unverified data. Some argued that the Bureau should only include complaints found to have contained regulatory violations. Others stated that the consumer complaints are likely to contain only unsubstantiated, inaccurate, and frivolous allegations that could mislead consumers. One industry group pointed to the existence of conflicting accounts between the company and the consumer as a reason to withhold complaints from publication. Privacy and consumer groups, on the other hand, commented that the lack of verification presented only minimal risks to companies because of controls in place to ensure that complaints must come from actual customers of that company, and furthermore that companies are given adequate time to challenge the customer/company relationship. They further contended that the benefit of making the data public is not outweighed by the ''speculative harm of unverified complaints.''

The Bureau acknowledges that the Complaint System does not provide for across the board verification of claims made in complaints. On its Web site, the Bureau makes clear that it does ''not verify the accuracy of all facts alleged in [the] complaints'' contained in the public database.[15] However, while the Bureau does not validate the factual allegations of complaints, it does maintain significant controls to authenticate complaints.[16] Finally, as noted elsewhere in this Notice, the Bureau believes that the information has value to the public and that the marketplace of ideas will determine what the data show.

2. Representativeness

Several trade associations reiterated previously submitted comments that it is inappropriate for the Bureau to publish data that is not randomly sourced. Non-random complaints, they contended again, cannot provide consumers with useful information. In contrast, one consumer group noted that the data need not be random to be of use in identifying trends and providing consumers with a valuable educational tool.

The latter view finds support in analyses of the database conducted by independent researchers. For example, one report notes the database's potential for assisting companies in decreasing risk and cost, increasing customer service, and identifying best practices that allow companies to address problems before they become complaints by comparing the Bureau's complaint data, social media data, and companies' own internal records.[17] Another independent researcher who examined the public database in September 2012 concluded that, ''the CFPB credit card complaint database provides clear, reliable and valid information for banks about their credit card practices.'' [18]

Industry comments on representativeness also recognized that the Bureau is expressly authorized to use complaint data to set priorities in its supervision process. Some industry comments also recognized that the data could play a role with respect to other statutory obligations, such as fair lending enforcement or market monitoring. If complaint data can provide the Bureau with meaningful information, then logically they may also prove useful to consumers and other reviewers. If the data lacked such potential, Congress would not have pointed to complaints as a basis to inform important Bureau priorities.[19] Furthermore, companies have told Consumer Response on numerous occasions that they learn valuable information from consumer complaints. If the data inform companies, they have the potential to inform consumers as well.

3. Context

Several trade associations commented that Bureau disclaimers about the lack of verification or representativeness will not effectively warn consumers about the limitations of the public database. The associations expressed concern that consumers and the media will inevitably see or portray the information as being endorsed by the Bureau, notwithstanding the Bureau's disclaimers. In addition, one trade group commented that the marketplace of ideas cannot prevent consumers from being misled by the public database. Another commented that the database fails to distinguish complaints of major and minor significance or those based on confusion about a regulatory requirement from those asserting a regulatory violation, and that, without that context, the data are open to misinterpretation.

One trade association suggested language for a new disclaimer, including statements that there are no attempts to verify the accuracy of any aspect of the complaint and that one should not draw any conclusion about any financial product or service, or any company mentioned. Given the various authentication measures used by the Bureau and the clear indication from—among others—Congress, companies themselves, and outside researchers that the data are informative, the Bureau has decided not to adopt this suggested language.

Some trade associations did not seem to be familiar with the additional context that the Bureau already provides to consumers and reviewers, asserting that the Bureau does not encourage consumers to view the Bureau's aggregate data reports and that the database does not provide the public with the date that it was last updated. On the consumer complaint database Web page, in addition to tutorials on how to use the data tool and a description of how the Bureau processes complaints, the Bureau maintains a section on its affirmative reports of data findings and provides links to copies of each of the documents.[20] Each time the data is displayed in the database, the ''about'' section provides those viewing

[15] Consumer Financial Protection Bureau, Consumer Complaint Database, available at *http://www.consumerfinance.gov/complaintdatabase/*.

[16] *Disclosure of Certain Credit Card Complaint Data* (Notice of Final Policy Statement), 77 FR 37558, *supra* at 37561–37652 (June 22, 2012).

[17] *Beyond the Arc Analyzes CFPB Complaint Data to Enhance Customer Experience: Analytics firm leverages complaint data to guide financial institutions in best practices for customer experience efforts,* Business Wire Jan. 31, 2013, available at *http://www.businesswire.com/news/home/20130131006068/en/Arc-Analyzes-CFPB*—(noting that the analysis of the CFPB database can help companies to detect regulatory risks and address them before potential for enforcement action, identify customer pain points to improve the customer experience and improve retention, and view competitors' strengths and weaknesses to help drive acquisition).

[18] B. Hayes, *The Reliability and Validity of the Consumer Financial Protection Bureau (CFPB) Complaint Database,* Business Over Broadway (Sept. 19, 2012). (''The frequency of different types of complaints are fairly stable over time. Additionally, the normative CFPB complaint scores are related to credit card customer satisfaction ratings (from an independent source); banks with better complaint scores (lower number of complaints) receive higher satisfaction ratings compared to banks with poor complaint scores (higher number of complaints).'') (available at *http://businessoverbroadway.com/the-reliability-and-validity-of-the-consumer-financial-protection-bureau-cfpb-complaint-database*).

[19] *See* 12 U.S.C. 5493(b)(3)(D).

[20] *http://www.consumerfinance.gov/complaintdatabase/.*

the data with the date the Bureau last updated the contents.[21]

The Bureau acknowledges the possibility that some consumers may draw (or be led to) erroneous conclusions from the data. That is true, however, for any market data. In addition, the Bureau's two-part disclosure policy—first, its own affirmative reports of data findings that it believes may inform consumers, and second, a public database that researchers and others can mine for possible data trends—is intended to minimize any consumer confusion about the scope of the Bureau's own conclusions with respect to the complaint data. The Bureau is open, however, to further suggestions from trade associations, companies, and other concerned stakeholders on how best to provide additional context for the public database.

4. Normalization

The Bureau notes the general acceptance by consumer and industry groups that normalization can improve data utility. Thus, although trade associations uniformly reiterated their opposition to the release of company names in the public database, many recognized the importance of normalizing the data that the Bureau decides to release.

One trade association suggested that normalization be addressed by the provision of independently verified data on the number of customer contacts on an annual basis, with the inclusion of an extra data field providing a proportion of complaints to contacts. Other commenters suggested including indications of scale, number of transactions or accounts, portfolio size, and information on closed or unopened accounts. Several groups and associations also noted that the database should provide the functionality to break down the data by types of products and services. The database does provide the ability to filter by product or service, and will continue to feature this function.

The Bureau agrees with commenters that, if possible, normalization should account, for example, for closed accounts with a balance and declined loan applications because these are additional contacts with the consumer and may be the subject of complaints. One trade association noted that additional time to prepare a proposal on normalization would be helpful. The Bureau intends to work further with commenters and other interested stakeholders on specific normalization approaches, and welcomes further operational suggestions on the point.

5. Manipulation

Several trade associations reiterated comments that third parties like debt negotiation companies could use complaint filing as a strategic tool to aid their clients. One trade association again commented that outside parties may artificially inflate complaint counts for litigation purposes. Several trade associations also repeated claims that one outside party has submitted numerous fraud complaints about a single merchant, allegedly for improper purposes.

The Complaint System has a number of protections against manipulation. For example, the burden of submitting a complaint is not negligible. Consumers must affirm that the information is true to the best of their knowledge and belief. The consumer is asked for a verifiable account number for account-based services. If none is provided (or available) and the consumer is unable to produce verifiable documentation of the relationship with the provider (such as a statement or receipt), the complaint is not pursued further. As described further below, when a company offers a reasonable basis to challenge its identification in a complaint, the Bureau does not post the relevant complaint to the public database unless and until the correct company is identified. Furthermore, the Bureau takes steps to consolidate duplicate complaints from the same consumer into a single complaint.

The Bureau maintains additional controls after complaints are submitted and companies are able to alert the Bureau to any suspected manipulation. Companies have the ability to provide feedback to the Bureau if they believe they are not the correct entity about which the consumer is complaining. In addition, companies can provide feedback to the Bureau about complaints they believe were not submitted by an authorized consumer or his or her representative. The Bureau may also intervene to clarify ambiguities if it observes anomalies in mass complaint submissions. As detailed in the final Policy Statement, where the company provides feedback that they are unable to verify the commercial relationship with the consumer who filed the complaint, the complaint will not be published in the database. If companies find this combined package of controls insufficient in practice, the Bureau is open to suggestions for addressing identifiable problems.

D. The Impact of Specific Public Database Fields on Consumers and Companies

1. Company Names

Consumer groups commented that the disclosure of company names represents a significant aspect of the Bureau's policy. They noted that other complaint databases that disclose the identity of specific companies in other industries have created pressure on companies to improve whatever metrics are measured by the public database. As a result, these groups expect the Bureau's public database to cause companies to compete more effectively on customer service and product quality. Together with privacy and open government groups, consumer groups contended that outside groups can use the company data to help consumers make more informed decisions.

Industry groups disagreed that disclosing company names serves these or any policy purposes. They reiterated previous comments that this form of disclosure would unfairly damage companies' reputation and competitive position. One trade association indicated that the inclusion of company names could implicate safety and soundness concerns, particularly in light of viral media. Several noted that the public database would not take account of the size and nature of the portfolio of different companies, which would cause consumer confusion. Others commented that company names should be reported as the parent company in order to avoid consumer confusion about the various ways companies with decentralized systems would show up in the database. Several industry groups also noted concerns over how a company acquired by another company would be displayed in the database. One trade association expressed a concern that disclosure of complaint data related to debt collection could be noncompliant with the Fair Debt Collection Practices Act, and suggested de-identification of company and consumer information related to such complaints.

Trade groups asserted that if company names are to be included, they should be verified. Several noted that consumers would be particularly likely to name the merchant or other partner in connection with pre-paid cards, and not the actual issuer. Some noted that account numbers would not be sufficient for verification because the system will accept complaints without an account number and some complaints—like declined application complaints—will arise even when there is no account number.

[21] *https://data.consumerfinance.gov/dataset/Credit-Card-Complaints/25ei-6bcr#About.*

The Bureau believes that industry comments fail to acknowledge the system controls that are in place to verify that a complaint is from an actual customer of the company and that the company is properly identified. If a consumer contacts the Bureau solely with an inquiry, it will not be recorded as a complaint and therefore not published in the database. Companies have the ability to notify the Bureau if they cannot take action because the complaint is not related to the company. No company will be associated with a complaint if it demonstrates a reasonable basis to challenge a commercial relationship with the consumer. Currently, the Complaint System provides companies 15 days to challenge company identification, a time period which experience has shown to be sufficient.[22] As noted earlier, there are also system controls, including controls available to companies, designed to (i) identify and prevent publication of duplicate complaints from the same consumer, and (ii) to prevent other efforts to manipulate the Complaint System.

For many complaints, account numbers provide a reliable method to verify the identity of the company. The Bureau acknowledges that some complaints may identify the company as the merchant or, for example, another partner. In such cases, the account number provided will not match the name provided. To prevent this, the Bureau can confirm the account number and other descriptive information with the consumer, and then substitute the name of the correct company. The merchant or other partners are not named. The Bureau also recognizes that there are cases in which no account number is available to the consumer, such as when credit applications are declined, or when the complaints involve services that are not tied to accounts. In these cases, the Bureau works directly with the consumer to identify the correct company from correspondence or other communications provided by or received from the company. If the correct company cannot be identified in this manner, the complaint will be closed and no data will be added to the public database.

The Bureau acknowledges, as it did in the Proposed Complaint Data Disclosure Policy Statement, that there are significantly varying views among stakeholders about whether consumer and company provided data is useful to consumers. However, the Bureau continues to believe that this disclosure may allow researchers to inform consumers about potentially significant trends and patterns in the data. In addition, given that companies have made competitive use of this and other public databases, the Bureau anticipates these disclosures have the potential to sharpen competition over product quality and customer service.

Furthermore, as several trade associations conceded and as previously noted above, Congress itself recognized that the Bureau may properly use consumer complaint data to set supervision, enforcement, and market monitoring priorities.[23] If the Bureau is able to use complaint data in this way, there is good reason to allow consumers and outside researchers to weigh the importance of complaint data in their own research, analysis, and decision-making. Outside review of this kind will also help ensure that the Bureau remains accountable for addressing the complaints that it receives.

Finally, any privacy issues related to the Fair Debt Collection Practices Act will be considered and addressed when the Bureau begins accepting complaints about debt collection companies and considers disclosing related complaint data. Any issues raised with respect to processing of pre-paid cards, or other products and services about which the Bureau does not yet accept complaints, will be considered and addressed when the Bureau begins accepting such complaints and considers disclosing related complaint data. As stated in the final Policy Statement, the Bureau plans to study the effectiveness of its policy on an ongoing basis, and plans to continue to engage with the public, including regulated entities, as it assesses the efficacy of its complaint disclosure policy and retains the ability to make adjustments as needed when addressing the concerns of particular financial markets.

2. Zip Codes

Consumer groups commented that the Bureau should add additional location fields, such as city and census tract level data. Several trade associations, however, commented that zip code disclosure creates risks to privacy because zip codes can be combined with other data to identify consumers, particularly in sparsely populated rural zip codes and with respect to particular types of products, and suggested disclosing only the state. Trade associations also commented that zip code data may be misunderstood to imply discriminatory conduct, leading to unfounded allegations of discrimination.

The Bureau is mindful of the potential privacy implications of zip code disclosure. For the time being, and pending additional study, it will limit zip code disclosures to five digits, even if a consumer provides the full nine-digit zip code. Furthermore, as it analyzes the potential for narrative disclosure, the Bureau will consider the impact of zip code disclosures in assessing privacy risks. The Bureau will also analyze whether there are ways to disclose more granular location fields without creating privacy risks, as suggested by some commenters.

4. Discrimination

Consumer groups and trade associations mainly reiterated comments made in response to the Credit Card Data Proposed Policy Statement. Consumer groups generally favored the inclusion of the data, and industry groups commented that it should remain excluded. One trade association suggested eliminating the field from the complaint intake forms altogether, citing a lack of meaningful data and evidence of value in its collection. Some consumer groups, however, suggested that the Bureau request protected class information to assist in the detection of patterns and practices of lending and credit discrimination, and provide an explanation to consumers as to the value in collecting such information.

The Bureau is continuing to refine its methods for identifying discrimination allegations in complaints submitted by consumers. Accordingly, the Bureau does not plan to disclose discrimination field data in the public database at this time. In the interim, the Bureau will continue to study the conditions, if any, necessary for the appropriate disclosure of such information at the individual complaint level. The Bureau may also report discrimination allegation data at aggregated levels in its own periodic complaint data reports.

5. Type of Issue

Trade and consumer groups reiterated comments that the Bureau could improve this data field in several respects, including allowing a consumer to be able to select several issues for a

[22] Several commenters seemed to misunderstand the 15- and 60- day company response windows. The CFPB requests that companies respond to complaints within 15 calendar days. If a complaint cannot be closed within 15 calendar days, a company may indicate that its work on the complaint is ''In progress'' and provide a final response within 60 calendar days. Company responses include descriptions of steps taken or that will be taken, communications received from the consumer, any follow-up actions or planned follow-up actions, and categorization of the response.

[23] *See, e.g.,* 12 U.S.C. 5493(b)(3)(D).

given complaint. Several trade associations also repeated previous comments that the Bureau should not rely on consumers for this data point, and should allow companies to categorize the complaint data. The Bureau has worked to improve these categories, expanding the fields to include both a product and sub-product and, in some cases, an issue and sub-issue that the consumer can select. The Bureau stands by its previous statements and analysis on this issue.[24]

The Bureau is working to develop the required functionality for a consumer to be able to ''tag'' a complaint as implicating more than one issue. In addition, the Bureau is weighing possible improvements to the issue categories and is considering the extent to which Bureau staff should ''tag'' complaints as raising certain issues. The Bureau welcomes further input from stakeholders on how to further improve the issue categories.

6. Company Disposition

Consumer groups reiterated comments on the need to include additional data about the company's response, including narratives accompanying the disposition code and the date of the company response.[25] Trade associations noted that response categories such as ''Closed'' and ''Closed with explanation'' could have negative connotations, and one suggested adding an additional category of ''closed with no relief required.'' Another industry group suggesting distinguishing company response categories according to the type of company and product involved in the complaint.

The Bureau believes the changes previously made in response to industry concerns regarding the Complaint Systems' company response categories address the negative connotation concerns.[26] In addition, creating additional company response categories for each product or service would deprive reviewers of the ability to compare responses across products and services. The Bureau stands by its previous statements and analysis on this issue.[27]

7. Date Fields

Finally, the Bureau agrees with the commenters who argued for the inclusion of additional dates in the public database such as the date of the company's response and the consumer's assessment of that response, so that a user of the public database would know how fast complaints are processed. The Bureau includes the date that a complaint is sent to the Bureau and the date that the Bureau forwards it to the relevant company.[28] The Bureau is currently developing the technical ability to publish other date fields, including the date that a company responds. When this is feasible, the Bureau plans to include additional date fields in the public database.

E. Potential Impacts of Undisclosed Fields

The Bureau received a number of comments about data fields that the Proposed Complaint Data Disclosure Policy Statement did not list for disclosure in the public database, including consumer and company response narratives. The Bureau is not shifting any of these fields into the disclosed category in the final Policy Statement, although several fields remain under assessment for potential inclusion at a later date.

1. Consumer Narratives

The issue of disclosing consumer narratives generated the most comments. Consumer, civil rights, open government, and privacy groups uniformly supported disclosure on the grounds that it would provide consumers with more useful information on which to base financial decisions and would allow reviewers to assess the validity of the complaint. These groups also noted the potential for the narrative data to reduce perceived risk of reputational harm by providing context to the complaints, and submitted a proposal that would allow the consumer to submit a complaint without the collection of confidential personal information in the complaint description. Their proposal would also provide a consumer the chance to opt out of narrative disclosure in the public database, in whole or in part.

Trade groups and industry commenters nearly uniformly opposed disclosure of consumer narratives, reiterating comments made in response to the Bureau's Proposed Credit Card Data Disclosure Policy Statement. Several suggested that if the Bureau resolved to disclose narratives, it might inadvertently disclose personally identifiable information, with potentially significant consequences to the affected individuals. These commenters also argued that narrative disclosure might undermine the Bureau's mission to the extent that consumers, fearing potential disclosure of their personal financial information, would become reluctant to submit complaints. One trade association commented that the Bureau should consider the potential benefit of including both the consumer's narrative description and the company's narrative response.

While acknowledging the general lack of consensus in this area, the Bureau notes that almost all commenters—in response to both the Proposed Credit Card Complaint Data Disclosure Policy Statement and the recently Proposed Consumer Complaint Data Disclosure Policy Statement—agreed that the privacy risks of narrative disclosure must be carefully addressed if narrative disclosure is to take place. Accordingly, the Bureau will not publish narrative data until such time as the privacy risks of doing so have been carefully and fully addressed. In addition to assessing the feasibility of redacting personally identifiable information (''PII'') and narrative information that could be used for re-identification, by algorithmic and/or manual methods, the Bureau will carefully consider whether there are ways to give submitting consumers a meaningful choice of narrative disclosure options.

2. Responsive Company Narratives

Consumer groups argued that companies should have the same ability as consumers to offer their responsive narratives for either public disclosure or private communication to the consumer. According to these commenters, this mechanism would protect consumer privacy, allow for effective communication between consumers and companies, and permit companies to respond publicly to public complaint narratives. Most trade associations disagreed, reiterating arguments that the Gramm-Leach-Bliley Act prohibits them

[24] *Disclosure of Certain Credit Card Complaint Data* (Notice of final policy statement), 77 FR 37558, *supra* at 37565 (June 22, 2012).

[25] Specific comments on disclosure of company narratives are addressed in section E.2, and comments on date fields are addressed in section D.6 below.

[26] Consumer Response has provided detailed guidance to institutions participating in the Complaint System regarding these changes. Institutions can rely on the summary description provided herein in addition to more specific operational instructions.

[27] *Disclosure of Certain Credit Card Complaint Data* (Notice of final policy statement), 77 FR 37558, *supra* at 37565 (June 22, 2012).

[28] There may be a lag between the two dates in part because, as noted above, consumers do not always submit complaints with sufficient information. In addition, some complaints are received via channels that trigger additional processing and data entry steps by the Bureau. For example, a complaint submitted via the web complaint form will move to the appropriate company faster than a hard-copy complaint referred by another agency that must be input into the Bureau's system.

from publicly disclosing any PII about their customers. Trade associations and a financial services provider suggested that the Bureau should consider the potential benefit of including the company's response. Company responses, they noted, could provide balance by incorporating important details regarding the nature and resolution of the complaints. In light of the Bureau's current disclosure position on consumer narratives, however, the Bureau is not resolving this issue at this point.

F. Addition of New Data Fields

Several consumer groups asked the Bureau to add new data fields for collection and disclosure via the public database, including the ability to further define issue categories, noting that additional detail would make the database even more valuable as a pre-purchase educational tool. One group suggested that the database identify the commercial name of the individual financial product or service, not the company or product category alone. As noted, several groups urged that location data be provided at the city or census tract level to help identify discriminatory practices. To that same end, several groups urged the collection of demographic data on a voluntary basis. The Bureau discloses the product category (*e.g.,* mortgage), and will now include additional information about the sub-product (*e.g.,* reverse mortgage) that the consumer identifies. The Bureau will continue to evaluate the usefulness and benefit that additional fields may provide as it begins to accept complaints for additional types of consumer financial products or services. The Bureau is open to the inclusion of additional data fields and will continue to work with external stakeholders to address the value of adding such fields.

G. Posting Data for Complaints Submitted to Other Regulators

One consumer group commented that the public database should include data on complaints that the Bureau forwards to other agencies. This group also commented that the Bureau should encourage other agencies to submit complaints to the Bureau's public database.[29] Several trade associations expressed concerns about the publication of complaint data from other regulators, noting that complaints should simply be forwarded to the appropriate prudential regulator if not within the purview of the Bureau and not included in the database.

The Bureau agrees that the utility of the public database would be improved by the inclusion of as many complaint records as possible. As a result, it is open to other regulators providing parallel complaint data for inclusion in the public database. Until that can be achieved, however, the Bureau does not believe it would be that useful to include referred complaints in the public database. The Bureau would not be able to verify a commercial relationship, nor describe how and when a company responded to a referred complaint, or whether the consumer accepted or disputed the outcome.

IV. Final Policy Statement

The text of the final Policy Statement is as follows:

1. Purposes of Consumer Complaint Data Disclosure

The Bureau receives complaints from consumers about consumer financial products and services. The Bureau intends to disclose certain information about such consumer complaints in a public database and in the Bureau's own periodic reports. The purpose of this disclosure is to provide consumers with timely and understandable information about consumer financial products and services and to improve the functioning of the consumer financial markets for such products and services. By enabling more informed decisions about the use of consumer financial products and services, the Bureau intends for its complaint data disclosures to improve the transparency and efficiency of such consumer financial markets.

2. Public Access to Data Fields

Data from complaints that consumers submit will be uploaded to a publicly accessible database, as described below.

a. Complaints Included in the Public Database

To be included in the public database, complaints must: (a) Not be duplicative of another complaint at the Bureau from the same consumer; (b) not be a whistleblower complaint; (c) involve a consumer financial product or service within the scope of the Bureau's jurisdiction; and (d) be submitted by a consumer (or his or her authorized representative) with an authenticated commercial relationship with the identified company. The public database will include data from certain consumer complaints submitted on or after December 1, 2011.[30] In addition, when the Bureau begins to accept complaints for a type of consumer financial product or service other than those immediately subject to this policy, the Bureau will delay publication of such complaints until a reasonable period of time has lapsed in order to evaluate the data and consider whether any product- or service-specific policy changes are warranted.

b. Fields Included in the Public Database

For included complaints, the Bureau will upload to the public database certain non-narrative fields that do not call for PII. The Bureau plans to include the following fields:

(i) Bureau-assigned unique ID number;
(ii) Channel of submission to Bureau;
(iii) Date of submission to Bureau;
(iv) Consumer's 5-digit zip code;
(v) Product or service;
(vi) Sub-product;
(vii) Issue;
(viii) Date of submission to company;
(ix) Company name;
(x) Company response category;
(xi) Whether the company response was timely; and
(xii) Whether the consumer disputed the response.[31]

The consumer generates data for fields (iv), (v), (vi), (vii), and (xii). The Bureau will authenticate the consumer's identification of the relevant company in field (ix), and finalize the entry in that field as appropriate.[32] If a company demonstrates by the 15-day deadline that it has been wrongly identified, no data for that complaint will be posted unless and until the correct company is identified. At the 15-day mark, however, the Bureau will post the complaint data with the originally identified company in field (ix) so long as the Bureau has account number or documentary data to support the identification. If the Bureau

[29] Along the same lines, one trade group objected to the disclosure of company names in part because the Bureau's database would only include complaints against larger financial institutions.

[30] Credit card complaint data will be included from December 1, 2011. Mortgage complaint data likewise will be included from December 1, 2011, the date the Bureau began accepting such complaints. Complaint data on bank accounts and services, private student loans, and other consumer loans will be included from March 1, 2012, the date the Bureau began accepting these types of complaints.

[31] Additional fields remain under consideration for potential inclusion. For example, the Bureau may add a sub-issue field.

[32] The consumer's account number generally will enable authentication of the correct company for account-based services. If an account number is not applicable or available, the Bureau works directly with the consumer to identify the correct company from company correspondence such as statements or letters. If the correct company cannot be identified in this manner, no data is posted to the database. Account numbers will never become part of the public database.

cannot reasonably identify the company, however, the complaint will be closed without posting to the public database.

The complaint system automatically populates the two date fields, (iii) and (viii). The Bureau completes fields (i), (ii), and (xi).[33] The company completes field (x). If it selects ''Closed with monetary relief'' for field (x), the company will also enter the amount of monetary relief provided, although information as to amounts will not be included in the public database.[34] Field (x) will show as ''In progress'' if the company responds within 15 days indicating additional time is needed (up to 60 calendar days). The company's later response will then overwrite the ''In progress'' data entry. If no response is provided within 60 days, the field will be updated accordingly and updated as untimely.

c. When Data Is Included in the Public Database

The Bureau will generally add field data to the public database for a given complaint within 15 days of forwarding the complaint to the company in question. If the company responds ''Closed with monetary relief,'' ''Closed with non-monetary relief,'' ''Closed with explanation,'' ''Closed,'' or ''In progress'' before the 15-day deadline for response, the Bureau will then post applicable data for that complaint to the public database. If the company fails to respond at all by the 15-day deadline, the Bureau will also post data for that complaint at that point. In such case, the company response category field will be blank and the ''Untimely Response'' field will be marked. As noted above, if a company demonstrates by the 15-day deadline that it has been wrongly identified, no data for that complaint will be posted unless and until the correct company is identified. Once the Bureau discloses some data for a given complaint, it will add to the public database any new complaint data that are subject to disclosure as they become available. Subject to these various restrictions, data will be posted to the public database on a daily basis.

d. Public Access

A public platform for the public database will enable user-defined searches of the posted field data. Each complaint will be linked with a unique identifier, enabling reviewers to aggregate the data as they choose, including by complaint type, company, location, date, or any combination of variables. The data platform will also enable users to save and disseminate their data aggregations. These aggregations can be automatically updated as the public database expands to include more complaints. Finally, users will be able to download the data or analyze it via an Application Programming Interface.

e. Excluded Fields

The public database will not include PII fields such as a consumer's name, account number, or address information other than a 5-digit zip code. At least until it can conduct sufficient further study and install satisfactory controls, the Bureau will not post to the public database the consumer's narrative description of ''what happened,'' his or her description of a ''fair resolution,'' or his or her reason for disputing the company's response, if applicable. The Bureau also will not post a company's narrative response. The Bureau intends to study the potential inclusion of narrative fields as described further in section 4 of this Policy Statement.

3. Regular Bureau Reporting on Complaints

At periodic intervals, the Bureau intends to publish reports about complaint data, which may contain its own analysis of patterns or trends that it identifies in the complaint data. To date, the Bureau has published eight reports containing aggregate complaint data.[35] The Bureau intends for its reporting to provide information that will be valuable to consumers and other market participants. Before determining what reports to issue beyond those relating to its own handling of complaints, the Bureau will study the volume and content of complaints that it has received in a given reporting period for patterns or trends that it is able to discern from the data. If the data will support it, the Bureau intends for its reports to include certain standardized metrics that would provide comparisons across reporting periods. The reports will also describe the Bureau's use of complaint data across the range of its statutory authorities during a reporting period. Because monetary relief data will not be included in the individual-level public database, the Bureau anticipates such data will be included at non-individual levels in its own periodic reporting.

4. Matters for Further Study

Going forward, the Bureau intends to study the effectiveness of its consumer complaint disclosure policy in realizing its stated purposes, and plans to continue to engage with the public, including regulated entities, as it makes these assessments. The Bureau will also analyze options for normalization, and welcomes further input from stakeholders on how to implement such metrics. In addition, the Bureau will assess whether there are practical ways to disclose narrative data submitted by consumers and companies in a manner that will improve consumer understanding without undermining privacy interests or the effectiveness of the consumer complaint process, and without creating unwarranted reputational injury to companies.

5. Effect of Policy Statement

This Policy Statement is intended to provide guidance regarding the Bureau's exercise of discretion to publicly disclose certain data derived from consumer complaints. The Policy Statement does not create or confer any substantive or procedural rights on third parties that could be enforceable in any administrative or civil proceeding.

Authority: 12 U.S.C. 5492(a), 5493(b)(3), 5496(c)(4), 5511(b)(1), (5), and (c)(3), 5512(c)(3)(B).

Dated: March 25, 2013.

Richard Cordray,

Director, Bureau of Consumer Financial Protection.

[FR Doc. 2013–07569 Filed 4–9–13; 8:45 am]

BILLING CODE 4810–25–P

[33] If a response is untimely, at either the 15- or 60-day mark, field (xi) will show that the company did not respond on a timely basis. The company's substantive response, if it eventually makes one, will still be shown in field (x), but the untimeliness entry will remain.

[34] The Bureau is not planning to disclose the consumer's claimed amount of monetary loss and, as a result, believes it would be inappropriate to disclose, in the individual case, the amount of relief provided by the company. The Bureau, however, may include non- individual data on monetary relief in its own periodic reports. The Bureau has determined not to include the consumer's claimed amount of monetary relief because a review of complaints shows that consumers have had difficulty stating the amount and prefer to provide a narrative description of the relief that they believe to be appropriate.

[35] See note 5, *supra.*

DEPARTMENT OF TRANSPORTATION

Federal Aviation Administration

14 CFR Part 39

[Docket No. FAA–2012–0111; Directorate Identifier 2011–NM–089–AD; Amendment 39–17407; AD 2013–07–03]

RIN 2120–AA64

Airworthiness Directives; Airbus Airplanes

AGENCY: Federal Aviation Administration (FAA), Department of Transportation (DOT).

ACTION: Final rule.

SUMMARY: We are adopting a new airworthiness directive (AD) for all Airbus Model A330–200, A330–200 Freighter, A330–300, A340–200, and A340–300 series airplanes; and Model A340–541 airplanes and Model A340–642 airplanes. This AD was prompted by reports of cracks in the bogie pivot pin caused by material heating due to friction between the bogie pivot pin and bush, leading to chrome detachment and chrome dragging on the bogie pivot pin. This AD requires repetitive detailed inspections for degradation of the bogie pivot pins and for any cracks and damage of the pivot pin bushes of the main and central landing gear; a magnetic particle inspection of the affected bogie pivot pins for corrosion and base metal cracks; and repairing or replacing bogie pivot pins and pivot pin bushes, if necessary. We are issuing this AD to detect and correct cracks and damage to the main and central landing gear, which could result in the collapse of the landing gear and adversely affect the airplane's continued safe flight and landing.

DATES: This AD becomes effective May 15, 2013.

The Director of the Federal Register approved the incorporation by reference of certain publications listed in this AD as of May 15, 2013.

ADDRESSES: You may examine the AD docket on the Internet at *http://www.regulations.gov* or in person at the U.S. Department of Transportation, Docket Operations, M–30, West Building Ground Floor, Room W12–140, 1200 New Jersey Avenue SE., Washington, DC.

FOR FURTHER INFORMATION CONTACT: Vladimir Ulyanov, Aerospace Engineer, International Branch, ANM–116, Transport Airplane Directorate, FAA, 1601 Lind Avenue SW., Renton, Washington 98057–3356; telephone (425) 227–1138; fax (425) 227–1149.

SUPPLEMENTARY INFORMATION:

Discussion

We issued a supplemental notice of proposed rulemaking (SNPRM) to amend 14 CFR part 39 to include an AD that would apply to the specified products. That SNPRM was published in the **Federal Register** on September 7, 2012 (77 FR 55163). That SNPRM proposed to correct an unsafe condition for the specified products. The Mandatory Continuing Airworthiness Information (MCAI) states:

> During removals of A330/340 Main Landing Gear (MLG) Bogie Beams and A340–500/600 Center Landing Gear (CLG) Bogie Beams, cracks in the bogie pivot pin were found.
>
> Investigations indicated that these findings were the result of material heating, caused by friction between bogie pivot pin and bush, leading to chrome detachment and stress corrosion cracking.
>
> This condition, if not detected and corrected, could lead to collapse of the main or center landing gear, possibly resulting in damage to the aeroplane and/or injury to occupants.
>
> As a precautionary measure, EASA [European Aviation Safety Agency] issued AD 2011–0040 to require a one-time [detailed] inspection of the MLG (all types of A330 and A340 aeroplanes) and CLG (A340–500/600 aeroplanes only) to detect degradation or cracking of the bogie pivot pin [and to detect cracks and damage of the bushes], as applicable to aeroplane model, and the reporting of inspections results.
>
> Following issuance of EASA AD 2011–0040, several operators reported finding chrome detachment or chrome dragging on bogie pivot pin. New cases of cracks were also reported. It has been confirmed as well that, due to similar design, the enhanced MLG bogie pivot pin (Airbus modification 54500) could also be affected by this condition.
>
> Prompted by these findings, Airbus have developed an inspection programme consisting of repetitive inspections of the bogie pivot pin and applicable corrective actions.
>
> For the reasons described above, this [EASA] AD, which supersedes EASA AD 2011–0040 and extends the applicability to all A330 and A340 aeroplanes, requires accomplishment of repetitive inspections of the MLG and CLG (for A340–500 and A340–600 aeroplanes) bogie pivot pins and pivot pin bushes, and corrective actions, depending on findings.

Required actions also include, for certain airplanes, a magnetic particle inspection of the bogie pivot pin for corrosion and base metal cracks. The corrective actions include replacing any cracked or damaged pivot pin bush with a new or serviceable pivot pin bush, and replacing any corroded or cracked bogie pin with a new bogie pin. You may obtain further information by examining the MCAI in the AD docket.

Comments

We gave the public the opportunity to participate in developing this AD. We have considered the comments received.

Request To Change the Compliance Time

Delta Air Lines, Inc. (DAL) requested that the initial compliance time in paragraph (g) of the SNPRM (77 FR 55163, September 7, 2012) be changed from "* * * first flight of the airplane," to "* * * first flight of the new or overhauled landing gear," in two locations in that paragraph. The commenter did not provide rationale for this request.

We disagree with DAL's request. Our compliance time coincides with EASA AD 2012–0053, dated March 30, 2012, which specifically states, "Accomplishment of an overhaul of the landing gear does not substitute the accomplishment of an inspection as required by paragraph (1) of this [EASA] AD." The inspections required by this final rule are not equivalent to what is accomplished during landing gear overhaul. However, if the inspections required by this final rule are positively verified to have been accomplished during overhaul, the overhaul date may be used to determine the next repetitive inspection date. We have not changed this final rule in this regard.

Conclusion

We reviewed the available data and determined that air safety and the public interest require adopting the AD as proposed—except for minor editorial changes. We have determined that these minor changes:

- Are consistent with the intent that was proposed in the SNPRM (77 FR 55163, September 7, 2012) for correcting the unsafe condition; and
- Do not add any additional burden upon the public than was already proposed in the SNPRM (77 FR 55163, September 7, 2012).

Costs of Compliance

We estimate that this AD will affect 29 products of U.S. registry. We also estimate that it will take about 22 work-hours per product to comply with the basic requirements of this AD. The average labor rate is $85 per work-hour. Based on these figures, we estimate the cost of this AD to the U.S. operators to be $54,230, or $1,870 per product.

In addition, we estimate that any necessary follow-on actions would take about 6 work-hours and require parts costing $21,222, for a cost of $21,732 per product. We have no way of determining the number of products that may need these actions.

Authority for This Rulemaking

Title 49 of the United States Code specifies the FAA's authority to issue rules on aviation safety. Subtitle I, section 106, describes the authority of the FAA Administrator. ''Subtitle VII: Aviation Programs,'' describes in more detail the scope of the Agency's authority.

We are issuing this rulemaking under the authority described in ''Subtitle VII, Part A, Subpart III, Section 44701: General requirements.'' Under that section, Congress charges the FAA with promoting safe flight of civil aircraft in air commerce by prescribing regulations for practices, methods, and procedures the Administrator finds necessary for safety in air commerce. This regulation is within the scope of that authority because it addresses an unsafe condition that is likely to exist or develop on products identified in this rulemaking action.

Regulatory Findings

We determined that this AD will not have federalism implications under Executive Order 13132. This AD will not have a substantial direct effect on the States, on the relationship between the national government and the States, or on the distribution of power and responsibilities among the various levels of government.

For the reasons discussed above, I certify that this AD:

1. Is not a ''significant regulatory action'' under Executive Order 12866;
2. Is not a ''significant rule'' under the DOT Regulatory Policies and Procedures (44 FR 11034, February 26, 1979);
3. Will not affect intrastate aviation in Alaska; and
4. Will not have a significant economic impact, positive or negative, on a substantial number of small entities under the criteria of the Regulatory Flexibility Act.

We prepared a regulatory evaluation of the estimated costs to comply with this AD and placed it in the AD docket.

Examining the AD Docket

You may examine the AD docket on the Internet at *http://www.regulations.gov;* or in person at the Docket Operations office between 9 a.m. and 5 p.m., Monday through Friday, except Federal holidays. The AD docket contains the SNPRM (77 FR 55163, September 7, 2012), the regulatory evaluation, any comments received, and other information. The street address for the Docket Operations office (telephone (800) 647–5527) is in the **ADDRESSES** section. Comments will be available in the AD docket shortly after receipt.

List of Subjects in 14 CFR Part 39

Air transportation, Aircraft, Aviation safety, Incorporation by reference, Safety.

Adoption of the Amendment

Accordingly, under the authority delegated to me by the Administrator, the FAA amends 14 CFR part 39 as follows:

PART 39—AIRWORTHINESS DIRECTIVES

■ 1. The authority citation for part 39 continues to read as follows:

Authority: 49 U.S.C. 106(g), 40113, 44701.

§ 39.13 [Amended]

■ 2. The FAA amends § 39.13 by adding the following new AD:

2013–07–03 Airbus: Amendment 39–17407. Docket No. FAA–2012–0111; Directorate Identifier 2011–NM–089–AD.

(a) Effective Date

This airworthiness directive (AD) becomes effective May 15, 2013.

(b) Affected ADs

None.

(c) Applicability

This AD applies to Airbus Model A330–201, –202, –203, –223, –243, –223F, –243F, –301, –302, –303, –321, –322, –323, –341, –342, and –343 airplanes; Model A340–211, –212, –213, –311, –312, and –313 airplanes; and Model A340–541 and Model A340–642 airplanes; certificated in any category; all manufacturer serial numbers.

(d) Subject

Air Transport Association (ATA) of America Code 32, Landing gear.

(e) Reason

This AD was prompted by reports of cracks in the bogie pivot pin caused by material heating due to friction between the bogie pivot pin and bush, leading to chrome detachment and chrome dragging on the bogie pivot pin. We are issuing this AD to detect and correct cracks and damage to the main and central landing gear, which could result in the collapse of the landing gear and adversely affect the airplane's continued safe flight and landing.

(f) Compliance

You are responsible for having the actions required by this AD performed within the compliance times specified, unless the actions have already been done.

(g) Detailed Inspection

Within 26 months after the effective date of this AD or 26 months after the first flight of the airplane, whichever occurs later, but no earlier than 12 months after the first flight of the airplane: Do a detailed inspection for degradation (i.e., loss of chromium plate, loose chromium, sharp edges) of the bogie pivot pins and for any cracks and damage of the pivot pin bushes of the main landing gear, and, as applicable, the central landing gear, in accordance with the Accomplishment Instructions of the applicable service bulletin specified in paragraph (g)(1), (g)(2), or (g)(3) of this AD. Repeat the inspection thereafter at intervals not to exceed 26 months. Accomplishment of an overhaul of the landing gear does not substitute the accomplishment of the inspection as required by this paragraph.

(1) Airbus Mandatory Service Bulletin A330–32–3240, Revision 02, including Appendices 01 and 02, dated December 2, 2011 (for Model A330–200 series airplanes, Model A330–200 Freighter series airplanes, and Model A330–300 series airplanes).

(2) Airbus Mandatory Service Bulletin A340–32–4281, Revision 01, including Appendices 01 and 02, dated December 2, 2011 (for Model A340–200 series airplanes and Model A340–300 series airplanes).

(3) Airbus Mandatory Service Bulletin A340–32–5096, Revision 01, including Appendices 01 and 02, dated December 2, 2011 (for Model A340–541 airplanes and Model A340–642 airplanes).

(h) Corrective Action for Any Pivot Pin Bush Found Cracked or Damaged

If, during any inspection required by paragraph (g) of this AD, any pivot pin bush is found cracked or damaged: Before further flight, repair or replace the pivot pin bush with a new or serviceable pivot pin bush, in accordance with the Accomplishment Instructions of the applicable service bulletin specified paragraph (h)(1), (h)(2), or (h)(3) of this AD.

(1) Airbus Mandatory Service Bulletin A330–32–3240, Revision 02, including Appendices 01 and 02, dated December 2, 2011 (for Model A330–200 series airplanes, Model A330–200 Freighter series airplanes, and Model A330–300 series airplanes).

(2) Airbus Mandatory Service Bulletin A340–32–4281, Revision 01, including Appendices 01 and 02, dated December 2, 2011 (for Model A340–200 series airplanes and Model A340–300 series airplanes).

(3) Airbus Mandatory Service Bulletin A340–32–5096, Revision 01, including Appendices 01 and 02, dated December 2, 2011 (for Model A340–541 airplanes and Model A340–642 airplanes).

(i) Corrective Action for Any Bogie Pivot Pin Found With Degraded Chrome Plating

If, during any inspection required by paragraph (g) of this AD, degraded chrome plating on any bogie pivot pin is found: Before further flight, do a non-destructive test (magnetic particle inspection) of the affected bogie pivot pin for corrosion and base metal cracks, in accordance with the Accomplishment Instructions of the applicable service bulletin specified paragraph (i)(1), (i)(2), or (i)(3) of this AD.

(1) Airbus Mandatory Service Bulletin A330–32–3240, Revision 02, including Appendices 01 and 02, dated December 2, 2011 (for Model A330–200 series airplanes, Model A330–200 Freighter series airplanes, and Model A330–300 series airplanes).

(2) Airbus Mandatory Service Bulletin A340–32–4281, Revision 01, including

Appendices 01 and 02, dated December 2, 2011 (for Model A340–200 series airplanes and Model A340–300 series airplanes).

(3) Airbus Mandatory Service Bulletin A340–32–5096, Revision 01, including Appendices 01 and 02, dated December 2, 2011 (for Model A340–541 airplanes and Model A340–642 airplanes).

(j) Corrective Action for Any Bogie Pivot Pin Found Corroded or Found With Cracked Base Metal

If, during the non-destructive test (magnetic particle inspection) specified in paragraph (i) of this AD, the bogie pivot pin is found corroded or the base metal is found cracked: Before further flight, repair or replace the bogie pin with a new or serviceable bogie pin, in accordance with the Accomplishment Instructions of the applicable service bulletin specified paragraph (j)(1), (j)(2), or (j)(3) of this AD.

(1) Airbus Mandatory Service Bulletin A330–32–3240, Revision 02, including Appendices 01 and 02, dated December 2, 2011 (for Model A330–200 series airplanes, Model A330–200 Freighter series airplanes, and Model A330–300 series airplanes).

(2) Airbus Mandatory Service Bulletin A340–32–4281, Revision 01, including Appendices 01 and 02, dated December 2, 2011 (for Model A340–200 series airplanes and Model A340–300 series airplanes).

(3) Airbus Mandatory Service Bulletin A340–32–5096, Revision 01, including Appendices 01 and 02, dated December 2, 2011 (for Model A340–541 airplanes and Model A340–642 airplanes).

(k) No Terminating Action

Accomplishment of the corrective actions required by paragraphs (h) and (j) of this AD does not terminate the repetitive inspections required by paragraph (g) of this AD.

(l) Reporting Requirement

Submit a one-time report of the findings (both positive and negative) of the inspections required by paragraphs (g) and (i) of this AD to Airbus, Customer Services Directorate, 1 Rond Point Maurice Bellonte, 31707 Blagnac Cedex France, ATTN: SDC32 Technical Data and Documentation Services; fax (+33) 5 61 93 28 06; email *sb.reporting@airbus.com;* at the applicable time specified in paragraph (l)(1) or (l)(2) of this AD. The report must include the inspection results and a description of any discrepancies found.

(1) If the inspection was done on or after the effective date of this AD: Submit the report within 90 days after the inspection.

(2) If the inspection was done before the effective date of this AD: Submit the report within 90 days after the effective date of this AD.

(m) Credit for Previous Actions

This paragraph provides credit for the actions required by paragraphs (g) through (j) of this AD, if those actions were performed before the effective date of this AD using the service information specified in paragraphs (m)(1) through (m)(4) of this AD, which are not incorporated by reference in this AD.

(1) Airbus Mandatory Service Bulletin A330–32–3240, including Appendix 1, dated December 8, 2010 (for Model A330–200 series airplanes, Model A330–200 Freighter series airplanes, and Model A330–300 series airplanes).

(2) Airbus Mandatory Service Bulletin A330–32–3240, including Appendix 1, Revision 01, dated May 4, 2011 (for Model A330–200 series airplanes, Model A330–200 Freighter series airplanes, and Model A330–300 series airplanes).

(3) Airbus Mandatory Service Bulletin A340–32–4281, including Appendix 1, dated December 8, 2010 (for Airbus Model A340–200 series airplanes and Model A340–300 series airplanes).

(4) Airbus Mandatory Service Bulletin A340–32–5096, including Appendix 1, dated December 8, 2010 (for Model A340–541 airplanes and Model A340–642 airplanes).

(n) Other FAA AD Provisions

The following provisions also apply to this AD:

(1) Alternative Methods of Compliance (AMOCs): The Manager, International Branch, ANM–116, Transport Airplane Directorate, FAA, has the authority to approve AMOCs for this AD, if requested using the procedures found in 14 CFR 39.19. In accordance with 14 CFR 39.19, send your request to your principal inspector or local Flight Standards District Office, as appropriate. If sending information directly to the International Branch, send it to ATTN: Vladimir Ulyanov, Aerospace Engineer, International Branch, ANM–116, Transport Airplane Directorate, FAA, 1601 Lind Avenue SW., Renton, Washington 98057–3356; telephone (425) 227–1138; fax (425) 227–1149. Information may be emailed to: 9–ANM–116–AMOC–REQUESTS@faa.gov. Before using any approved AMOC, notify your appropriate principal inspector, or lacking a principal inspector, the manager of the local flight standards district office/certificate holding district office. The AMOC approval letter must specifically reference this AD.

(2) Airworthy Product: For any requirement in this AD to obtain corrective actions from a manufacturer or other source, use these actions if they are FAA-approved. Corrective actions are considered FAA-approved if they are approved by the State of Design Authority (or their delegated agent). You are required to assure the product is airworthy before it is returned to service.

(3) Reporting Requirements: A federal agency may not conduct or sponsor, and a person is not required to respond to, nor shall a person be subject to a penalty for failure to comply with a collection of information subject to the requirements of the Paperwork Reduction Act unless that collection of information displays a current valid OMB Control Number. The OMB Control Number for this information collection is 2120–0056. Public reporting for this collection of information is estimated to be approximately 5 minutes per response, including the time for reviewing instructions, completing and reviewing the collection of information. All responses to this collection of information are mandatory. Comments concerning the accuracy of this burden and suggestions for reducing the burden should be directed to the FAA at: 800 Independence Ave. SW., Washington, DC 20591, Attn: Information Collection Clearance Officer, AES–200.

(o) Related Information

Refer to MCAI European Aviation Safety Agency Airworthiness Directive 2012–0053, dated March 30, 2012, and the service information specified in paragraphs (o)(1) through (o)(3) of this AD, for related information.

(1) Airbus Mandatory Service Bulletin A330–32–3240, Revision 02, including Appendices 01 and 02, dated December 2, 2011.

(2) Airbus Mandatory Service Bulletin A340–32–4281, Revision 01, including Appendices 01 and 02, dated December 2, 2011.

(3) Airbus Mandatory Service Bulletin A340–32–5096, Revision 01, including Appendices 01 and 02, dated December 2, 2011.

(p) Material Incorporated by Reference

(1) The Director of the Federal Registe approved the incorporation by reference (IBR) of the service information listed in this paragraph under 5 U.S.C. 552(a) and 1 CFR part 51.

(2) You must use this service information as applicable to do the actions required by this AD, unless the AD specifies otherwise.

(i) Airbus Mandatory Service Bulletin A330–32–3240, Revision 02, including Appendices 01 and 02, dated December 2, 2011.

(ii) Airbus Mandatory Service Bulletin A340–32–4281, Revision 01, including Appendices 01 and 02, dated December 2, 2011.

(iii) Airbus Mandatory Service Bulletin A340–32–5096, Revision 01, including Appendices 01 and 02, dated December 2, 2011.

(3) For service information identified in this AD, contact Airbus SAS—Airworthiness Office—EAL, 1 Rond Point Maurice Bellonte, 31707 Blagnac Cedex, France; telephone +33 5 61 93 36 96; fax +33 5 61 93 45 80; email *airworthiness.A330-A340@airbus.com;* Internet *http://www.airbus.com.*

(4) You may review copies of the service information at the FAA, Transport Airplane Directorate, 1601 Lind Avenue SW., Renton, WA. For information on the availability of this material at the FAA, call 425–227–1221.

(5) You may view this service information that is incorporated by reference at the National Archives and Records Administration (NARA). For information on the availability of this material at NARA, call 202–741–6030, or go to: *http://www.archives.gov/federal-register/cfr/ibr-locations.html.*

Issued in Renton, Washington, on March 28, 2013.

Ali Bahrami,

Manager, Transport Airplane Directorate, Aircraft Certification Service.

[FR Doc. 2013–08047 Filed 4–9–13; 8:45 am]

BILLING CODE 4910–13–P

DEPARTMENT OF TRANSPORTATION

Federal Aviation Administration

14 CFR Part 39

[Docket No. FAA–2012–1105; Directorate Identifier 2012–NM–137–AD; Amendment 39–17406; AD 2013–07–02]

RIN 2120–AA64

Airworthiness Directives; Airbus Airplanes

AGENCY: Federal Aviation Administration (FAA), Department of Transportation (DOT).

ACTION: Final rule.

SUMMARY: We are adopting a new airworthiness directive (AD) for all Airbus Model A318, A319, and A320 series airplanes. This AD was prompted by fuel system reviews conducted by the manufacturer, which revealed that certain fuel pumps under certain conditions can create an ignition source in the fuel tank. This AD requires modification of the center tank fuel pump control circuit by installation of ground fault interrupters (GFIs). This AD would also require either replacement of the GFI or deactivation of the associated fuel pump following failure of any post-modification operational test of the GFI. We are issuing this AD to prevent the potential of ignition sources inside fuel tanks, which, in combination with flammable fuel vapors, could result in fuel tank explosions and consequent loss of the airplane.

DATES: This AD becomes effective May 15, 2013.

The Director of the Federal Register approved the incorporation by reference of a certain publication listed in this AD as of May 15, 2013.

ADDRESSES: You may examine the AD docket on the Internet at *http://www.regulations.gov* or in person at the U.S. Department of Transportation, Docket Operations, M–30, West Building Ground Floor, Room W12–140, 1200 New Jersey Avenue SE., Washington, DC.

FOR FURTHER INFORMATION CONTACT: Sanjay Ralhan, Aerospace Engineer, International Branch, ANM–116, Transport Airplane Directorate, FAA, 1601 Lind Avenue SW., Renton, Washington 98057–3356; telephone 425–227–1405; fax 425–227–1149.

SUPPLEMENTARY INFORMATION:

Discussion

We issued a notice of proposed rulemaking (NPRM) to amend 14 CFR part 39 to include an AD that would apply to the specified products. That NPRM was published in the **Federal Register** on October 23, 2012 (77 FR 64765). That NPRM proposed to correct an unsafe condition for the specified products. The Mandatory Continuing Airworthiness Information (MCAI) states:

> * * * The FAA published Special Federal Aviation Regulation (SFAR) 88, and the Joint Aviation Authorities (JAA) published Interim Policy INT/POL/25/12.
>
> In the framework of these requirements, EASA [European Aviation Safety Agency] have determined that the electrical power supply circuits of certain fuel pumps, installed on A320 family aeroplanes, for which the canisters become uncovered during normal operation, could, under certain conditions, create an ignition source in the tank vapour space.
>
> This condition, if not corrected, could result in a fuel tank explosion and consequent loss of the aeroplane.
>
> To address this potential unsafe condition, Airbus developed a modification which includes installing Ground Fault Interrupters (GFI) into the centre tank fuel pump control circuit, providing additional system protection by electrically isolating the pump in case of a ground fault condition downstream of the GFI.
>
> Consequently, EASA issued AD 2012–0133 to require modification of the centre tank fuel pump control circuit by installing GFI and thereafter, in case a GFI failed an operational test, replacement of the faulty GFI, or deactivation of the associated fuel pump in accordance with the provisions of the applicable Master Minimum Equipment List (MMEL).
>
> Since that [EASA] AD was issued, it was noted that, inadvertently, the Applicability of the Final AD was incorrect (the preceding PAD [proposed AD] 12–051 was correct) by excluding aeroplanes on which Airbus modification 150736 has been embodied in production. As a result, the required actions when a GFI fails an operational test did not apply to those aeroplanes.
>
> For the reasons described above, this [EASA] AD retains the requirements [modification of the centre tank fuel pump control circuit by installing GFI] of EASA AD 2012–0133, which is superseded, and expands the Applicability to aeroplanes on which Airbus modification 150736 has been embodied in production.

The required actions also include either replacement of the GFI or deactivation of the associated fuel pump following failure of any post-modification operational test of the GFI. You may obtain further information by examining the MCAI in the AD docket.

Comments

We gave the public the opportunity to participate in developing this AD. We considered the comments received.

Request To Withdraw NPRM (77 FR 64765, October 23, 2012)

An anonymous commenter questioned the constitutionality of creating an airworthiness directive.

We infer that the commenter is requesting that we withdraw the NPRM (77 FR 64765, October 23, 2012), because it is unconstitutional. We disagree. Under part 39 of the Federal Aviation Regulations (14 CFR part 39), we issue an AD addressing a product when we find that an unsafe condition exists in the product, and the condition is likely to exist or develop in other products of the same type design. In the case of this AD, we determined that the unsafe condition–the potential of ignition sources inside fuel tanks with flammable fuel vapors–could result in fuel tank explosions and consequent loss of the airplane.

Further, under the Administrative Procedure Act (APA) (Pub. L. 79–404, 5 U.S.C. 551, et.seq.) we are required to provide notice of our intent to add, change, or remove information in a rule, as well as to give the public an opportunity to participate in rulemaking actions unless we find good cause to bypass those requirements. (The APA is a body of laws that, working together, provide minimum guidelines and rules that federal agencies are required to follow when issuing a rule or changing existing rules that, if adopted, would impact the rights of the regulated public.) We have followed these requirements in issuing this AD. We have determined it is appropriate to proceed with issuing the final rule.

Request To Shorten Compliance Time

Although agreeing with the intent of the NPRM (77 FR 64765, October 23, 2012), Air Line Pilots Association, International (ALPA) recommended that we shorten the compliance time to 24 months or less.

We disagree with the request to shorten the compliance time of the AD. The ALPA did not provide substantiating data that would justify such a shortening of the compliance time. We determined the compliance time (48 months after the effective date of this AD) primarily based on our assessment of the safety risk. In establishing the compliance time, we considered the overall risk to the fleet, including the severity of the failure and the likelihood of the failure's occurrence. We have not changed this final rule regarding this issue.

Request To Clarify Paragraph (h) of the NPRM (77 FR 64765, October 23, 2012)

Virgin America requested clarification of paragraph (h) of the NPRM (77 FR

64765, October 23, 2012). Virgin America stated that, according to paragraph (h) of the NPRM, for airplanes on which Modification 150736 has been embodied in production, and no GFI has been permanently removed (i.e., the airplane has been demodified) since first flight, then the actions required by paragraph (g) of the NPRM would not be required. The commenter stated that an operator may remove and replace a GFI during normal maintenance operations. The commenter requested that we clarify the sentence in paragraph (h) that states ''and on which no GFI has been removed since first flight.''

We agree to clarify the intent of paragraph (h) of this AD. Paragraph (h) of this AD is to ensure that the modification required by paragraph (g) of this AD is required only if the operator has modified the airplane from the as-delivered configuration. We have revised paragraph (h) of this final rule accordingly.

Request for Clarification of Deactivation

Virgin America stated that clarification is needed for paragraph (i) of the NPRM (77 FR 64765, October 23, 2012) with regard to deactivation of the center tank fuel pump. FAA master minimum equipment list (MMEL) 28–21–02 does not include instructions for deactivating center tank fuel pumps.

We agree. The terminology in FAA MMEL 28–21–02 is different from what is used in EASA AD 2012–0198, dated September 26, 2012. We have revised paragraph (i) in this final rule to clarify that the word ''deactivated'' is synonymous with ''inoperative.'' The FAA MMEL does contain (M) notation (i.e., maintenance requirements for certain cases of dispatch).

Request for Instructions for Continued Flight After Inadvertent GFI Tripping

Delta stated that there have been industry reports of in-service difficulties due to the GFI's tripping and generating a ''CTR TK PUMP 2 LO PR'' message. Preliminary evaluations by the manufacturer have found the subject GFIs to be faulty, but a root cause has not been reported. Delta requested that we work with Airbus to provide instructions for continued flight after inadvertent GFI tripping.

We are aware of these events. GFIs are expected to isolate the ignition source downstream of the GFI in the center fuel tank. We encourage operators to work with the original equipment manufacturers (OEMs) for identifying the root cause of premature failure of GFIs so that OEMs can take appropriate steps to alleviate the commenter's concerns referenced in the comment. These events are not considered unsafe conditions that warrant changing the final rule regarding this issue.

Request To Define Tasks for GFI Operational Test Failure

Delta requested that we define the conditional tasks—to be done if a GFI fails an operational test—as specified in paragraph (i) of the NPRM (77 FR 64765, October 23, 2012).

We partially agree with the commenter. We agree that no tasks have been provided by Airbus at this time to address failure of the GFI operational tests; however, this AD requires the operators to contact the FAA for approval of an alternative method of compliance (AMOC) in accordance with paragraph (j)(1) of this AD. We have not changed the final rule regarding this issue.

Request To Correct Task Number

Airbus and Kirk Taylor requested that we revise the NPRM (77 FR 64765, October 23, 2012) to reflect the correction of the maintenance review board report (MRBR) task in Note 1, which should read ''28.18.00/10'' instead of 28.18.00/01.

We agree with the request to correct the MRBR task number. We have revised Note 1 to paragraph (i) of this AD to refer to Task 28.18.00/10, Operational Check of Centre Tank Fuel Pump GFI, of the Airbus A318/A319/A320/A321 Maintenance Review Board Report or Task 281800–710–801, Operational Check of Centre Tank Fuel Pump GFI, of the Airbus A318/A319/A320 Aircraft Maintenance Manual.

Request To Correct Typographical Error

Virgin America noted an error in Note 2 of the NPRM (77 FR 64765, October 23, 2012), which should refer to paragraph (i) instead of paragraph (h) of the AD.

We agree. We have changed Note 2 to paragraph (i) of this AD to correct the reference to paragraph (i).

Request To Consider Additional Information in AD Development

Virgin America stated that it was aware of an Airbus/operator forum discussion regarding in-service failures of the GFI unit. Virgin American requested that we consider these failure events and associated consequences in the rulemaking process.

We are aware of these events. GFIs are expected to isolate the ignition source downstream of the GFI in the center fuel tank. We encourage operators to work with the OEMs for identifying the root cause of premature failure of GFIs so that OEMs can take appropriate steps to alleviate concerns. These events are not considered unsafe conditions that warrant changing the final rule regarding this issue.

Conclusion

We reviewed the available data, including the comments received, and determined that air safety and the public interest require adopting the AD with the changes described previously and minor editorial changes. We have determined that these changes:

- Are consistent with the intent that was proposed in the NPRM (77 FR 64765, October 23, 2012) for correcting the unsafe condition; and
- Do not add any additional burden upon the public than was already proposed in the NPRM (77 FR 64765, October 23, 2012).

Costs of Compliance

Based on the service information, we estimate that this AD affects about 755 products of U.S. registry. We also estimate that it takes 11 work-hours per product to comply with the basic requirements of this AD. The average labor rate is $85 per work-hour. Required parts cost about $3,360 per product, depending on configuration. Where the service information lists required parts costs that are covered under warranty, we have assumed that there will be no charge for these parts. As we do not control warranty coverage for affected parties, some parties may incur costs higher than estimated here. Based on these figures, we estimate the cost of the AD on U.S. operators to be $3,242,725, or $4,295 per product.

Authority for This Rulemaking

Title 49 of the United States Code specifies the FAA's authority to issue rules on aviation safety. Subtitle I, section 106, describes the authority of the FAA Administrator. ''Subtitle VII: Aviation Programs,'' describes in more detail the scope of the Agency's authority.

We are issuing this rulemaking under the authority described in ''Subtitle VII, Part A, Subpart III, Section 44701: General requirements.'' Under that section, Congress charges the FAA with promoting safe flight of civil aircraft in air commerce by prescribing regulations for practices, methods, and procedures the Administrator finds necessary for safety in air commerce. This regulation is within the scope of that authority because it addresses an unsafe condition that is likely to exist or develop on products identified in this rulemaking action.

Regulatory Findings

We determined that this AD will not have federalism implications under Executive Order 13132. This AD will not have a substantial direct effect on the States, on the relationship between the national government and the States, or on the distribution of power and responsibilities among the various levels of government.

For the reasons discussed above, I certify that this AD:

1. Is not a ''significant regulatory action'' under Executive Order 12866;

2. Is not a ''significant rule'' under the DOT Regulatory Policies and Procedures (44 FR 11034, February 26, 1979);

3. Will not affect intrastate aviation in Alaska; and

4. Will not have a significant economic impact, positive or negative, on a substantial number of small entities under the criteria of the Regulatory Flexibility Act.

We prepared a regulatory evaluation of the estimated costs to comply with this AD and placed it in the AD docket.

Examining the AD Docket

You may examine the AD docket on the Internet at *http://www.regulations.gov;* or in person at the Docket Operations office between 9 a.m. and 5 p.m., Monday through Friday, except Federal holidays. The AD docket contains the NPRM (77 FR 64765, October 23, 2012), the regulatory evaluation, any comments received, and other information. The street address for the Docket Operations office (telephone (800) 647–5527) is in the **ADDRESSES** section. Comments will be available in the AD docket shortly after receipt.

List of Subjects in 14 CFR Part 39

Air transportation, Aircraft, Aviation safety, Incorporation by reference, Safety.

Adoption of the Amendment

Accordingly, under the authority delegated to me by the Administrator, the FAA amends 14 CFR part 39 as follows:

PART 39—AIRWORTHINESS DIRECTIVES

■ 1. The authority citation for part 39 continues to read as follows:

Authority: 49 U.S.C. 106(g), 40113, 44701.

§ 39.13 [Amended]

■ 2. The FAA amends § 39.13 by adding the following new AD:

2013–07–02 Airbus: Amendment 39–17406. Docket No. FAA–2012–1105; Directorate Identifier 2012–NM–137–AD.

(a) Effective Date

This airworthiness directive (AD) becomes effective May 15, 2013.

(b) Affected ADs

None.

(c) Applicability

This AD applies to Airbus Model A318–111, –112, –121, and –122 airplanes; Model A319–111, –112, –113, –114, –115, –131, –132, and –133 airplanes; and Model A320–111, –211, –212, –214, –231, –232, and –233 airplanes; certificated in any category; all manufacturer serial numbers.

(d) Subject

Air Transport Association (ATA) of America Code 28, Fuel.

(e) Reason

This AD was prompted by fuel system reviews conducted by the manufacturer, which revealed that certain fuel pumps under certain conditions can create an ignition source in the fuel tank. We are issuing this AD to prevent the potential of ignition sources inside fuel tanks, which, in combination with flammable fuel vapors, could result in fuel tank explosions and consequent loss of the airplane.

(f) Compliance

You are responsible for having the actions required by this AD performed within the compliance times specified, unless the actions have already been done.

(g) Modification

Except as provided by paragraph (h) of this AD: Within 48 months after the effective date of this AD, modify the center tank fuel pump control circuit by installing ground fault interrupters (GFIs), in accordance with the Accomplishment Instructions of Airbus Service Bulletin A320–28–1188, dated March 23, 2012.

(h) Airplanes Excluded From Modification Requirement

For airplanes on which Airbus Modification 150736 has been embodied in production, and on which no GFI has been permanently removed since first flight, the modification specified in paragraph (g) of this AD is not required.

(i) Corrective Action for Failed Post-Modification Operational Test

After accomplishment of the modification specified in paragraph (g) or (h) of this AD, each time a GFI fails an operational test, before further flight, replace the GFI or deactivate (make inoperative) the associated fuel pump, in accordance with a method approved by the Manager, International Branch, ANM–116, Transport Airplane Directorate, FAA.

Note 1 to paragraph (i) of this AD: Guidance on the operational test specified in paragraph (i) of this AD can be found in Task 28.18.00/10, Operational Check of Centre Tank Fuel Pump GFI, of the Airbus A318/A319/A320/A321 Maintenance Review Board Report or Task 281800–710–801, Operational Check of Centre Tank Fuel Pump GFI, of the Airbus A318/A319/A320 Aircraft Maintenance Manual.

Note 2 to paragraph (i) of this AD: Guidance on the fuel pump deactivation specified in paragraph (i) of this AD can be found in Item 28–21–02, Center Tank Systems, of the FAA Master Minimum Equipment List for Airbus A318/A319/A320/A321.

(j) Other FAA AD Provisions

The following provisions also apply to this AD:

(1) *Alternative Methods of Compliance (AMOCs):* The Manager, International Branch, ANM–116, Transport Airplane Directorate, FAA, has the authority to approve AMOCs for this AD, if requested using the procedures found in 14 CFR 39.19. In accordance with 14 CFR 39.19, send your request to your principal inspector or local Flight Standards District Office, as appropriate. If sending information directly to the International Branch, send it to ATTN: Sanjay Ralhan, Aerospace Engineer, 1601 Lind Avenue SW., Renton, Washington 98057–3356; telephone 425–227–1405; fax 425–227–1149. Information may be emailed to: *9-ANM-116-AMOC-REQUESTS@faa.gov*. Before using any approved AMOC, notify your appropriate principal inspector, or lacking a principal inspector, the manager of the local flight standards district office/certificate holding district office. The AMOC approval letter must specifically reference this AD.

(2) *Airworthy Product:* For any requirement in this AD to obtain corrective actions from a manufacturer or other source, use these actions if they are FAA-approved. Corrective actions are considered FAA-approved if they are approved by the State of Design Authority (or their delegated agent). You are required to assure the product is airworthy before it is returned to service.

(k) Related Information

Refer to MCAI EASA Airworthiness Directive 2012–0198, dated September 26, 2012; and Airbus Service Bulletin A320–28–1188, dated March 23, 2012; for related information.

(l) Material Incorporated by Reference

(1) The Director of the Federal Register approved the incorporation by reference (IBR) of the service information listed in this paragraph under 5 U.S.C. 552(a) and 1 CFR part 51.

(2) You must use this service information as applicable to do the actions required by this AD, unless the AD specifies otherwise.

(i) Airbus Service Bulletin A320–28–1188, dated March 23, 2012.

(ii) Reserved.

(3) For service information identified in this AD, contact Airbus, Airworthiness Office—EIAS, 1 Rond Point Maurice Bellonte, 31707 Blagnac Cedex, France; telephone +33 5 61 93 36 96; fax +33 5 61 93 44 51; email *account.airworth-eas@airbus.com;* Internet *http://www.airbus.com.*

(4) You may review copies of the service information at the FAA, Transport Airplane Directorate, 1601 Lind Avenue SW., Renton,

WA. For information on the availability of this material at the FAA, call 425–227–1221.

(5) You may view this service information that is incorporated by reference at the National Archives and Records Administration (NARA). For information on the availability of this material at NARA, call 202–741–6030, or go to: *http://www.archives.gov/federal-register/cfr/ibr-locations.html.*

Issued in Renton, Washington, on March 28, 2013.

Ali Bahrami,

Manager, Transport Airplane Directorate, Aircraft Certification Service.

[FR Doc. 2013–08068 Filed 4–9–13; 8:45 am]

BILLING CODE 4910–13–P

DEPARTMENT OF TRANSPORTATION

Federal Aviation Administration

14 CFR Part 39

[Docket No. FAA–2012–0630; Directorate Identifier 2011–SW–010–AD; Amendment 39–17409; AD 2013–07–05]

RIN 2120–AA64

Airworthiness Directives; Eurocopter France Helicopters

AGENCY: Federal Aviation Administration (FAA), DOT.

ACTION: Final rule.

SUMMARY: We are adopting a new airworthiness directive (AD) for Eurocopter France EC130B4 helicopters. This AD requires visually checking the center windscreen panel (center windscreen) for a crack and replacing the center windscreen if there is a crack, if the windscreen distorts during flight, or within 12 months. This AD was prompted by in-flight cracking and failure of a center windscreen. The actions of this AD are intended to detect a crack in the blending radii of the center windscreen to prevent failure of the windscreen, injury to the flight crew, and subsequent loss of control of the helicopter.

DATES: This AD is effective May 15, 2013.

The Director of the Federal Register approved the incorporation by reference of a certain document listed in this AD as of May 15, 2013.

ADDRESSES: For service information identified in this AD, contact American Eurocopter Corporation, 2701 N. Forum Drive, Grand Prairie, TX 75052, telephone (972) 641–0000 or (800) 232–0323, fax (972) 641–3775, or at *http://www.eurocopter.com/techpub.* You may review the referenced service information at the FAA, Office of the Regional Counsel, Southwest Region, 2601 Meacham Blvd., Room 663, Fort Worth, Texas 76137.

Examining the AD Docket

You may examine the AD docket on the Internet at *http://www.regulations.gov* or in person at the Docket Operations Office between 9 a.m. and 5 p.m., Monday through Friday, except Federal holidays. The AD docket contains this AD, any incorporated-by-reference service information, the economic evaluation, any comments received, and other information. The street address for the Docket Operations Office (phone: 800–647–5527) is U.S. Department of Transportation, Docket Operations Office, M–30, West Building Ground Floor, Room W12–140, 1200 New Jersey Avenue SE., Washington, DC 20590.

FOR FURTHER INFORMATION CONTACT: Jim Grigg, Manager, Safety Management Group, Rotorcraft Directorate, FAA, 2601 Meacham Blvd., Fort Worth, TX 76137; telephone (817) 222–5110; email *jim.grigg@faa.gov.*

SUPPLEMENTARY INFORMATION:

Discussion

On June 18, 2012, at 77 FR 36213, the **Federal Register** published our notice of proposed rulemaking (NPRM), which proposed to amend 14 CFR part 39 to include an AD that would apply to Eurocopter France EC130B4 helicopters with a center windscreen, part number (P/N) 350A25–9004–00, 350A25–9025–00, or 350A25–9041–20. That NPRM proposed to require, before each flight, visually checking the center windscreen and replacing the center windscreen panel before further flight if there is a crack in the center windscreen panel or if the windscreen distorts during flight. The NPRM also proposed to require, within 12 months, replacing the center windscreen with a certain part-numbered windscreen, which would terminate the repetitive inspection requirements. The NPRM specified that an owner/operator (pilot) may perform the visual check and must enter compliance with the applicable paragraph into the helicopter maintenance records in accordance with 14 CFR 43.9(a)(1)–(4) and 91.417(a)(2)(v). A pilot may perform this check because it involves only a visual check for a crack in the center windscreen and can be performed equally well by a pilot or a mechanic. This authorization is an exception to our standard maintenance regulations. The proposed requirements were intended to detect a crack in the blending radii of the center windscreen to prevent failure of the windscreen, injury to the flight crew, and subsequent loss of control of the helicopter.

The European Aviation Safety Agency (EASA), which is the Technical Agent for the Member States of the European Union, issued EASA AD No. 2010–0258, dated December 6, 2010 (AD 2010–0258), to correct an unsafe condition for the Eurocopter France EC130B4 helicopters. EASA received reports that center windscreen panels failed during flights due to a crack that started in the blending radius between the lower and upper sections of the windscreen. EASA stated that this condition, if not detected and corrected, could result in serious injury of the helicopter occupants, and therefore, issued Emergency AD 2007–0219–E, dated August 24, 2007, (AD 2007–0219–E), requiring a pre-flight inspection of the center windscreen, repair or replacement of a cracked windscreen, and an airspeed limitation. In AD 2010–0258, EASA notes that it approved a modification (MOD 073590) for the EC130B4 helicopters that incorporates a newly designed center windscreen panel, part number (P/N) 350A25–9045–20, to ''eliminate the possibility of centre windshield cracks thus providing an alternative terminating action for the preflight inspections.''

Comments

We gave the public the opportunity to participate in developing this AD, but we received no comments on the NPRM (77 FR 36213, June 18, 2012).

FAA's Determination

These helicopters have been approved by the aviation authority of France and are approved for operation in the United States. Pursuant to our bilateral agreement with France, EASA, its technical representative, has notified us of the unsafe condition described in the EASA AD. We are issuing this AD because we evaluated all information provided by EASA and determined the unsafe condition exists and is likely to exist or develop on other helicopters of these same type designs and that air safety and the public interest require adopting the AD requirements as proposed.

Differences Between This AD and the EASA AD

The EASA AD imposes flight restrictions and replacing the windscreen within 50 flight hours or 15 days, whichever occurs first, if distortion of the windscreen is detected in-flight. This AD mandates replacing the windscreen before further flight if distortion occurs during flight. In addition, this AD mandates MOD

073590 and replacing the affected windscreen with an airworthy windscreen, P/N 350A25–9045–20, within 12 months.

Related Service Information

We reviewed Eurocopter Emergency Alert Service Bulletin (ASB) No. 05A005 Revision 2, dated November 22, 2010. The ASB specifies:

- Performing a visual check of the center windscreen before each flight.
- Replacing any center windscreen before resuming flight if a crack is detected.
- If in-flight distortion is found, immediately restricting airspeed to 70 knots or below, and
  - ○ If a crack is found, before next flight, replacing the windscreen per Eurocopter Service Bulletin 56–003, dated November 16, 2010, (SB 56–003), which describes procedures to perform MOD 073590, and
  - ○ If no crack is found, affixing an airspeed limitation label and within 50 flying hours or 15 days, whichever is earlier, replacing the windscreen per MOD 073590.
- That incorporation of MOD 073590 is an alternative to the bulletin, relieving users of the inspection requirements.

EASA has classified this ASB as mandatory and issued AD 2010–0258 to ensure the continued airworthiness of these helicopters.

Costs of Compliance

We estimate that this AD will affect 87 helicopters of U.S. registry and that labor costs will average $85 per work-hour. Therefore, we estimate the following costs to comply with this AD:

- The check of the center windscreen before each flight will take about 15 minutes for a labor cost of $21.25 per inspection. No parts will be needed, so the total cost for the U.S. 87-helicopter fleet is about $1,849 per inspection.
- Replacing the center windscreen will require about 20 work-hours for a labor cost of $1,700 per helicopter. Parts will cost $6,037 for a total cost per helicopter of $7,737.

Authority for This Rulemaking

Title 49 of the United States Code specifies the FAA's authority to issue rules on aviation safety. Subtitle I, section 106, describes the authority of the FAA Administrator. Subtitle VII: Aviation Programs, describes in more detail the scope of the Agency's authority.

We are issuing this rulemaking under the authority described in Subtitle VII, Part A, Subpart III, Section 44701: ''General requirements.'' Under that section, Congress charges the FAA with promoting safe flight of civil aircraft in air commerce by prescribing regulations for practices, methods, and procedures the Administrator finds necessary for safety in air commerce. This regulation is within the scope of that authority because it addresses an unsafe condition that is likely to exist or develop on helicopters identified in this rulemaking action.

Regulatory Findings

This AD will not have federalism implications under Executive Order 13132. This AD will not have a substantial direct effect on the States, on the relationship between the national government and the States, or on the distribution of power and responsibilities among the various levels of government.

For the reasons discussed above, I certify that this AD:

(1) Is not a ''significant regulatory action'' under Executive Order 12866;

(2) Is not a ''significant rule'' under DOT Regulatory Policies and Procedures (44 FR 11034, February 26, 1979);

(3) Will not affect intrastate aviation in Alaska to the extent that it justifies making a regulatory distinction; and

(4) Will not have a significant economic impact, positive or negative, on a substantial number of small entities under the criteria of the Regulatory Flexibility Act.

We prepared an economic evaluation of the estimated costs to comply with this AD and placed it in the AD docket.

List of Subjects in 14 CFR Part 39

Air transportation, Aircraft, Aviation safety, Incorporation by reference, Safety.

Adoption of the Amendment

Accordingly, under the authority delegated to me by the Administrator, the FAA amends 14 CFR part 39 as follows:

PART 39—AIRWORTHINESS DIRECTIVES

■ 1. The authority citation for part 39 continues to read as follows:

Authority: 49 U.S.C. 106(g), 40113, 44701.

§ 39.13 [Amended]

■ 2. The FAA amends § 39.13 by adding the following new airworthiness directive (AD):

2013–07–05 Eurocopter France: Amendment 39–17409; Docket No. FAA–2012–0630; Directorate Identifier 2011–SW–010–AD.

(a) Applicability

This AD applies to Eurocopter France EC130B4 helicopters with center windscreen panel (center windscreen), part number (P/N) 350A25–9004–00, 350A25–9025–00, or 350A25–9041–20, certificated in any category.

(b) Unsafe Condition

This AD defines the unsafe condition as a crack in the blending radii of the center windscreen, which could lead to failure of the center windscreen, injury to the flight crew, and subsequent loss of control of the helicopter.

(c) Effective Date

This AD becomes effective May 15, 2013.

(d) Compliance

You are responsible for performing each action required by this AD within the specified compliance time unless accomplished previously.

(e) Required Actions

(1) Until the center windscreen is replaced with center windscreen P/N 350A25–9045–20, before each flight, visually check the center windscreen for a crack in the area of the blending radii where the front-lower part of the center windscreen joins the front fuselage as depicted in Figure 1 to paragraph (e)(1) of this AD. This visual check may be performed by the owner/operator (pilot) holding at least a private pilot certificate, and must be entered into the aircraft records showing compliance with this AD in accordance with Title 14 Code of Federal Regulations (14 CFR) 43.9 (a)(1)–(4) and 14 CFR 91.417(a)(2)(v). The record must be maintained as required by 14 CFR 91.417, 121.380, or 135.439.

BILLING CODE 4910–13–P

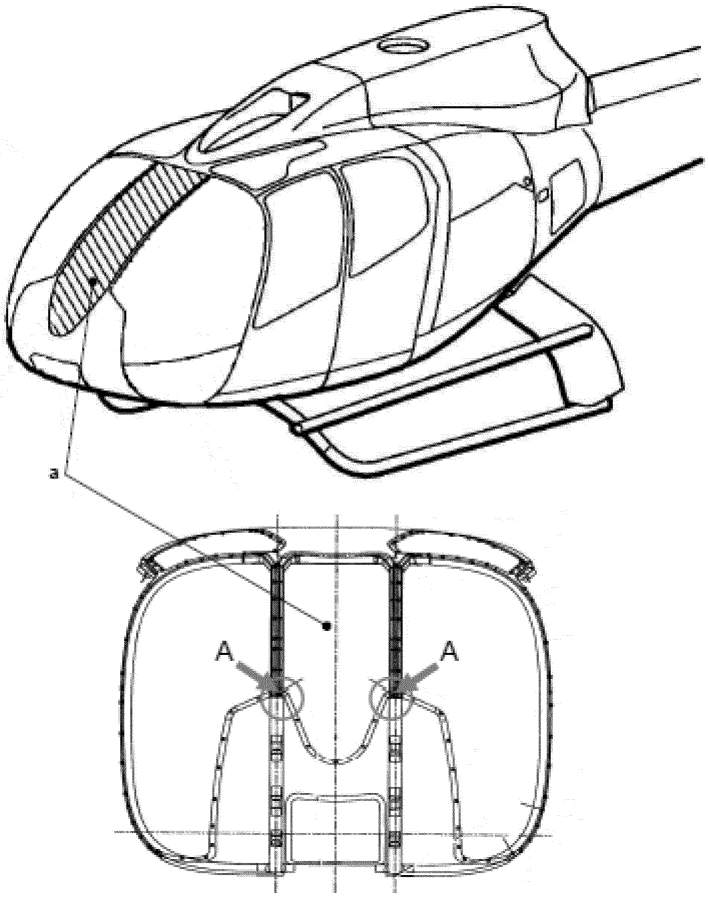

Figure 1 to Paragraph (e)(1)

BILLING CODE 4910–13–C

(2) If there is a crack or if a pilot indicates that the center windscreen distorted during flight, before further flight, replace the center windscreen with an airworthy center windscreen, P/N 350A25–9045–20, in accordance with the Accomplishment Instructions, paragraphs 2.B.2.b. through 2.B.2.b.4., of Eurocopter Service Bulletin No. 56–003, Revision 0, dated November 16, 2010.

(3) Within 12 months, replace the center windscreen with an airworthy center windscreen, P/N 350A25–9045–20, in accordance with the instructions contained in paragraph (e)(2) of this AD.

(4) Replacing the center windscreen with center windscreen, P/N 350A25–9045–20, constitutes terminating action for the requirements of this AD.

(f) Special Flight Permits

Special flight permits may be issued in accordance with 14 CFR 21.197 and 21.199 to operate the helicopter to a location where the requirements of this AD can be accomplished, provided that:

(1) No passengers are onboard;

(2) The time to fly to the location does not exceed 10 hours time-in-service; and

(3) The airspeed does not exceed 70 knots indicated air speed (KIAS).

(g) Alternative Methods of Compliance (AMOCs)

(1) The Manager, Safety Management Group, FAA, may approve AMOCs for this AD. Send your proposal to: Jim Grigg, Manager, Safety Management Group, Rotorcraft Directorate, FAA, 2601 Meacham Blvd., Fort Worth, TX 76137; telephone (817) 222–5110; email *jim.grigg@faa.gov.*

(2) For operations conducted under a 14 CFR part 119 operating certificate or under 14 CFR part 91, subpart K, we suggest that you notify your principal inspector, or lacking a principal inspector, the manager of the local flight standards district office or certificate holding district office, before operating any aircraft complying with this AD through an AMOC.

(h) Additional Information

The subject of this AD is addressed in European Aviation Safety Agency AD No. 2010–0258, dated December 6, 2010.

(i) Subject

Joint Aircraft Service Component (JASC) Code: 5600, Window/Windshield System.

(j) Material Incorporated by Reference

(1) The Director of the Federal Register approved the incorporation by reference (IBR) of the service information listed in this paragraph under 5 U.S.C. 552(a) and 1 CFR part 51.

(2) You must use this service information as applicable to do the actions required by this AD, unless the AD specifies otherwise.

(i) Eurocopter Service Bulletin No. 56–003, Revision 0, dated November 16, 2010.

(ii) Reserved.

(3) For Eurocopter service information identified in this AD, contact American Eurocopter Corporation, 2701 N. Forum Drive, Grand Prairie, TX 75052, telephone (972) 641–0000 or (800) 232–0323, fax (972) 641–3775, or at *http://www.eurocopter.com/techpub.*

(4) You may view this service information at FAA, Office of the Regional Counsel, Southwest Region, 2601 Meacham Blvd., Room 663, Fort Worth, Texas 76137. For information on the availability of this material at the FAA, call (817) 222–5110.

(5) You may view this service information that is incorporated by reference at the National Archives and Records Administration (NARA). For information on the availability of this material at NARA, call (202) 741–6030, or go to: *http://www.archives.gov/federal-register/cfr/ibr-locations.html.*

Issued in Fort Worth, Texas, on January 22, 2013.

Kim Smith,

Directorate Manager, Rotorcraft Directorate, Aircraft Certification Service.

[FR Doc. 2013–07932 Filed 4–9–13; 8:45 am]

BILLING CODE 4910–13–P

DEPARTMENT OF TRANSPORTATION

Federal Aviation Administration

14 CFR Part 39

[Docket No. FAA–2012–0809; Directorate Identifier 2011–NM–135–AD; Amendment 39–17361; AD 2013–04–04]

RIN 2120–AA64

Airworthiness Directives; The Boeing Company Airplanes

AGENCY: Federal Aviation Administration (FAA), DOT.

ACTION: Final rule.

SUMMARY: We are superseding an existing airworthiness directive (AD) for certain The Boeing Company Model 757 airplanes equipped with Rolls-Royce RB211–535E engines. That AD currently requires repetitive inspections for signs of damage of the aft hinge fittings and attachment bolts of the thrust reversers, and related investigative and corrective actions if necessary. The existing AD also provides for an optional terminating modification for the repetitive inspections. For certain airplanes, this new AD adds a one-time inspection of the washers installed under the attachment bolts of the aft hinge fittings for correct installation sequence, and reinstallation if necessary. This new AD also adds an option for installing a redesigned aft hinge fitting with the trim already done, instead of trimming an existing or new hinge fitting, which is included in the existing optional terminating modification. This AD was prompted by reports of incorrectly installed washers under the attachment bolts of the aft hinge fittings of the thrust reversers. We are issuing this AD to prevent failure of the attachment bolts and consequent separation of a thrust reverser from the airplane during flight, which could result in structural damage to the airplane.

DATES: This AD is effective May 15, 2013.

The Director of the Federal Register approved the incorporation by reference of certain publications listed in the AD as of May 15, 2013.

The Director of the Federal Register approved the incorporation by reference of certain other publications listed in this AD as of August 6, 2008 (73 FR 37786, July 2, 2008).

ADDRESSES: For service information identified in this AD, contact Boeing Commercial Airplanes, Attention: Data & Services Management, P. O. Box 3707, MC 2H–65, Seattle, Washington 98124–2207; telephone 206–544–5000, extension 1; fax 206–766–5680; Internet *https://www.myboeingfleet.com.* You may review copies of the referenced service information at the FAA, Transport Airplane Directorate, 1601 Lind Avenue SW., Renton, Washington. For information on the availability of this material at the FAA, call 425–227–1221.

Examining the AD Docket

You may examine the AD docket on the Internet at *http://www.regulations.gov;* or in person at the Docket Management Facility between 9 a.m. and 5 p.m., Monday through Friday, except Federal holidays. The AD docket contains this AD, the regulatory evaluation, any comments received, and other information. The address for the Docket Office (phone: 800–647–5527) is Document Management Facility, U.S. Department of Transportation, Docket Operations, M–30, West Building Ground Floor, Room W12–140, 1200 New Jersey Avenue SE., Washington, DC 20590.

FOR FURTHER INFORMATION CONTACT: Nancy Marsh, Aerospace Engineer, Airframe Branch, ANM–120S, FAA, Seattle Aircraft Certification Office, 1601 Lind Avenue SW., Renton, Washington 98057–3356; phone: 425–917–6440; fax: 425–917–6590; email: *nancy.marsh@faa.gov.*

SUPPLEMENTARY INFORMATION:

Discussion

We issued a notice of proposed rulemaking (NPRM) to amend 14 CFR part 39 to supersede AD 2008–13–20, Amendment 39–15583 (73 FR 37786, July 2, 2008). That AD applies to the specified products. The NPRM published in the **Federal Register** August 16, 2012 (77 FR 49396). That NPRM proposed to continue to require repetitive inspections for signs of damage of the aft hinge fittings and attachment bolts of the thrust reversers, and related investigative and corrective actions if necessary. That NPRM also proposed to continue to provide for an optional terminating modification for the repetitive inspections. For certain airplanes, that NPRM proposed to add a one-time inspection of the washers installed under the attachment bolts of the aft hinge fittings for correct installation sequence, and reinstallation if necessary. That NPRM also proposed to add an option for installing a redesigned aft hinge fitting with the trim already done, instead of trimming an existing or new hinge fitting, which is included in the existing optional terminating modification.

Comments

We gave the public the opportunity to participate in developing this AD. The following presents the comments received on the proposal (77 FR 49396, August 16, 2012) and the FAA's response to each comment.

Support for the NPRM (77 FR 49396, August 16, 2012)

Boeing concurred with the content of the NPRM (77 FR 49396, August 16, 2012).

FedEx Express stated that it is accomplishing the actions specified in the NPRM (77 FR 49396, August 16, 2012), and determined that its regular maintenance check schedule is not adversely affected by the specified actions.

Request To Address Effects of NPRM (77 FR 49396, August 16, 2012) on Winglets

Aviation Partners Boeing (APB) stated that it has reviewed the NPRM (77 FR 49396, August 16, 2012), and Boeing Special Attention Service Bulletin 757–54–0049, Revision 1, dated September 23, 2009, and Revision 2, dated July 27, 2011; and Boeing Special Attention Service Bulletin 757–54–0050, Revision 1, dated October 7, 2009, and Revision 2, dated July 27, 2011; and has determined that the installation of winglets, per Supplemental Type Certificate (STC) ST01518SE, ''does not affect them.''

We infer that APB means the installation of these winglets does not affect accomplishing the NPRM (77 FR 49396, August 16, 2012). We agree with the commenter and have determined that this AD should clarify the procedures to address these APB winglets. We have added a new paragraph (c)(2) to this AD to state that the installation of STC ST01518SE (*http://rgl.faa.gov/Regulatory_and_Guidance_Library/rgstc.nsf/0/48E13CDFBBC32CF4862576A4005D308B?OpenDocument&Highlight=st01518se*) does not affect the ability to accomplish the actions required by this AD. For airplanes on which STC ST01518SE is installed, a ''change in product'' alternative method of compliance (AMOC) approval request is not necessary to comply with the requirements of section 39.17 of the

Federal Aviation Regulations (14 CFR 39.17). For all other AMOC requests, the operator must request approval according to paragraph (n) of this AD.

Request To Withdraw the NPRM (77 FR 49396, August 16, 2012)

American Airlines (AAL) stated that the existing FAA AD 2008–13–20, Amendment 39–15583 (73 FR 37786, July 2, 2008), is sufficient to correct the unsafe condition identified in the NPRM (77 FR 49396, August 16, 2012). AAL noted that if an operator deviated from the fastener stack-up in Figures 11 and 12 of Boeing Special Attention Service Bulletin 757–54–0049, dated July 16, 2007, it should be dealt with on a case-by-case basis, and not by issuing an industry-wide requirement.

Although AAL did not make a specific request, we infer that it wants the NPRM (77 FR 49396, August 16, 2012) withdrawn. We agree that operators with airplanes on which the subject modification has been done must accomplish a one-time inspection and corrective action because the washers may have been installed backwards. However, we do not agree that improper installation of the washers using the procedures in Boeing Special Attention Service Bulletin 757–54–0049, dated July 16, 2007, should be dealt with on a case-by-case basis.

Improper installation would recreate the unsafe condition, which must be addressed by doing the actions required by this AD. In addition, although the correct part number for the incorrect washer name of ''plain washer'' is identified in Boeing Special Attention Service Bulletin 757–54–0049, dated July 16, 2007, information for substituting other ''plain washers'' is also provided by referring to the additional guidance specified in the Boeing 757 Structural Repair Manual. Therefore, we are issuing this AD without further delay, in order to eliminate the identified unsafe condition of incorrectly installed washers under the attachment bolts of the aft hinge fittings of the thrust reversers.

Request To Accomplish Certain Steps in the Service Information Out of Sequence

AAL asked that it be allowed to accomplish certain steps in the referenced service information out of sequence. AAL stated that Boeing Special Attention Service Bulletin 757–54–0049, Revision 2, dated July 27, 2011, removed Note 1 from the Work Instructions, and Note 1 allowed operators to change the sequence of steps for the specified procedures. AAL noted that if it is not allowed to accomplish certain steps out of sequence, it will be prevented from accomplishing the actions in that service bulletin in a timely manner. AAL added that the inspection and modification instructions are straightforward and are fundamental maintenance procedures.

We agree that certain steps in the Work Instructions of Boeing Special Attention Service Bulletin 757–54–0049, Revision 2, dated July 27, 2011, could be accomplished out of sequence; however, certain other steps cannot. We suggest that AAL provide supporting data to Boeing to substantiate that the service information can be revised to permit accomplishing those steps out of sequence when appropriate. AAL may also submit a request for approval of an alternative method of compliance (AMOC), as specified in paragraph (n) of this AD, to use for accomplishing those steps out of sequence. We have not changed the AD in this regard.

Request To Revise Certain Instructions in the NPRM (77 FR 49396, August 16, 2012)

AAL asked that only the work steps critical to correcting the unsafe condition be mandated by the AD. AAL stated that ''open and close'' are part of typical maintenance that is fundamental to a qualified maintenance facility; therefore, the instructions on how an operator gets to the steps should not be mandated but left to the operator's discretion as the best method to use to address the existing unsafe condition.

We agree that certain steps in the Work Instructions of Boeing Special Attention Service Bulletin 757–54–0049, Revision 2, dated July 27, 2011, may not need to be mandated; however, AAL did not provide supporting data of which steps in particular. We infer that AAL is asking to exclude the instructions mandated for access and close. Therefore, we have changed paragraph (g) of this AD to specify accomplishing Part II of the service information. We have also changed paragraph (l) of this AD to specify accomplishing Part IV of the service information for the inspection, and Part III of the service information for the preventive modification. These changes exclude Parts I and V of the service information which contain the instructions for access and close.

Conclusion

We reviewed the relevant data, considered the comments received, and determined that air safety and the public interest require adopting the AD with the change described previously. We also determined that this change will not increase the economic burden on any operator or increase the scope of the AD.

Costs of Compliance

We estimate that this AD affects 389 airplanes of U.S. registry.

We estimate the following costs to comply with this AD:

ESTIMATED COSTS

Action	Labor cost	Parts cost	Cost per product	Cost on U.S. operators
Retained inspections in AD 2008-13-20, Amendment 39-15583 (73 FR 37786, July 2, 2008).	2 work-hours × $85 per hour = $170 per inspection cycle.	$0	$170 per inspection cycle	$66,130 per inspection cycle.
Retained optional modification in AD 2008-13-20, Amendment 39-15583 (73 FR 37786, July 2, 2008), and new optional actions.	61 work-hours × $85 per hour = $5,185.	$5,276	$10,461	Up to $4,069,329.
New inspection	6 work-hours × $85 per hour = $510.	$0	$510	Up to $198,390.

We have received no definitive data that would enable us to provide cost estimates for the on-condition actions specified in this AD.

Authority for This Rulemaking

Title 49 of the United States Code specifies the FAA's authority to issue rules on aviation safety. Subtitle I, Section 106, describes the authority of the FAA Administrator. Subtitle VII, Aviation Programs, describes in more detail the scope of the Agency's authority.

We are issuing this rulemaking under the authority described in Subtitle VII, Part A, Subpart III, Section 44701, ''General requirements.'' Under that section, Congress charges the FAA with promoting safe flight of civil aircraft in air commerce by prescribing regulations for practices, methods, and procedures the Administrator finds necessary for safety in air commerce. This regulation is within the scope of that authority because it addresses an unsafe condition that is likely to exist or develop on products identified in this rulemaking action.

Regulatory Findings

We have determined that this AD will not have federalism implications under Executive Order 13132. This AD will not have a substantial direct effect on the States, on the relationship between the national government and the States, or on the distribution of power and responsibilities among the various levels of government.

For the reasons discussed above, I certify that this AD:

(1) Is not a ''significant regulatory action'' under Executive Order 12866,

(2) Is not a ''significant rule'' under DOT Regulatory Policies and Procedures (44 FR 11034, February 26, 1979),

(3) Will not affect intrastate aviation in Alaska, and

(4) Will not have a significant economic impact, positive or negative, on a substantial number of small entities under the criteria of the Regulatory Flexibility Act.

List of Subjects in 14 CFR Part 39

Air transportation, Aircraft, Aviation safety, Incorporation by reference, Safety.

Adoption of the Amendment

Accordingly, under the authority delegated to me by the Administrator, the FAA amends 14 CFR part 39 as follows:

PART 39—AIRWORTHINESS DIRECTIVES

■ 1. The authority citation for part 39 continues to read as follows:

Authority: 49 U.S.C. 106(g), 40113, 44701.

§ 39.13 [Amended]

■ 2. The FAA amends § 39.13 by removing airworthiness directive (AD) 2008–13–20, Amendment 39–15583 (73 FR 37786, July 2, 2008), and adding the following new AD:

2013–04–04 The Boeing Company: Amendment 39–17361; Docket No. FAA–2012–0809; Directorate Identifier 2011–NM–135–AD.

(a) Effective Date

This AD is effective May 15, 2013.

(b) Affected ADs

This AD supersedes AD 2008–13–20, Amendment 39–15583 (73 FR 37786, July 2, 2008).

(c) Applicability

(1) This AD applies to The Boeing Company Model 757–200, –200CB, –200PF, and –300 series airplanes; certificated in any category; equipped with Rolls-Royce RB211–535E engines.

(2) Installation of Supplemental Type Certificate (STC) ST01518SE (*http://rgl.faa.gov/Regulatory_and_Guidance_Library/rgstc.nsf/0/48E13CDFBBC32CF4862576A4005D308B?OpenDocument&Highlight=st01518se*) does not affect the ability to accomplish the actions required by this AD. For airplanes on which STC ST01518SE is installed, a ''change in product'' alternative method of compliance (AMOC) approval request is not necessary to comply with the requirements of 14 CFR 39.17.

(d) Subject

Joint Aircraft System Component (JASC)/Air Transport Association (ATA) of America Code 54, Nacelles/Pylons.

(e) Unsafe Condition

This AD results from reports of incorrectly installed washers under the attachment bolts of the aft hinge fittings of the thrust reversers. We are issuing this AD to prevent failure of the attachment bolts and consequent separation of a thrust reverser from the airplane during flight, which could result in structural damage to the airplane.

(f) Compliance

Comply with this AD within the compliance times specified, unless already done.

(g) Retained Repetitive Inspections/Investigative and Corrective Actions

This paragraph restates the requirements of paragraph (f) of AD 2008–13–20, Amendment 39–15583 (73 FR 37786, July 2, 2008), with revised service information. At the time specified in paragraph 1.E. ''Compliance,'' of Boeing Special Attention Service Bulletin 757–54–0049 or 757–54–0050, both dated July 16, 2007, as applicable; except as provided by paragraph (h) of this AD: Do a detailed inspection for signs of damage of the aft hinge fittings and attachment bolts of the thrust reversers by doing all the actions, including all applicable related investigative and corrective actions, as specified in Part II of the Accomplishment Instructions of the applicable service bulletin specified in paragraph (g)(1), (g)(2), or (g)(3); or paragraph (g)(4), (g)(5), or (g)(6) of this AD; as applicable. Do all applicable related investigative and corrective actions at the time specified in paragraph 1.E., ''Compliance,'' of the applicable service bulletin identified in paragraph (g)(1) or (g)(4) of this AD. As of the effective date of this AD, only the service bulletin specified in paragraph (g)(3) or (g)(6) of this AD, as applicable, may be used to accomplish the actions required by this paragraph. If any damage is found and the service bulletin identified in paragraph (g)(1), (g)(2), (g)(3), (g)(4), (g)(5), or (g)(6) of this AD specifies to contact Boeing for appropriate action: Before further flight, repair using a method approved in accordance with the procedures specified in paragraph (n) of this AD.

(1) Boeing Special Attention Service Bulletin 757–54–0049, dated July 16, 2007.

(2) Boeing Special Attention Service Bulletin 757–54–0049, Revision 1, dated September 23, 2009.

(3) Boeing Special Attention Service Bulletin 757–54–0049, Revision 2, dated July 27, 2011.

(4) Boeing Service Bulletin 757–54–0050, dated July 16, 2007.

(5) Boeing Special Attention Service Bulletin 757–54–0050, Revision 1, dated October 7, 2009.

(6) Boeing Special Attention Service Bulletin 757–54–0050, Revision 2, dated July 27, 2011.

(h) Retained Exception to Service Information

This paragraph restates the requirements of paragraph (g) of AD 2008–13–20, Amendment 39–15583 (73 FR 37786, July 2, 2008). Where Boeing Special Attention Service Bulletin 757–54–0049 or Boeing Service Bulletin 757–54–0050, both dated July 16, 2007; as applicable; specifies compliance times relative to the date on the service bulletin, this AD requires compliance within the specified compliance time after August 6, 2008 (the effective date of AD 2008–13–20).

(i) Retained Optional Terminating Modification

This paragraph restates the actions specified in paragraph (h) of AD 2008–13–20, Amendment 39–15583 (73 FR 37786, July 2, 2008). Accomplishing the preventive modification identified in the service bulletin specified in paragraph (g)(1), (g)(2), or (g)(3); or paragraph (g)(4), (g)(5), or (g)(6) of this AD; as applicable; terminates the repetitive inspections required by paragraph (g) of this AD.

(j) Retained Concurrent Actions

This paragraph restates the requirements of paragraph (i) of AD 2008–13–20, Amendment 39–15583 (73 FR 37786, July 2, 2008). Prior

to or concurrently with accomplishing the actions identified in the service bulletin specified in paragraph (g)(1), (g)(2), or (g)(3) of this AD, as applicable, accomplish the replacement specified in Boeing Special Attention Service Bulletin 757–54–0015, Revision 3, dated September 19, 1996.

(k) Retained Credit for Previous Actions

This paragraph restates the provisions of paragraph (j) of AD 2008–13–20, Amendment 39–15583 (73 FR 37786, July 2, 2008). This paragraph provides credit for the actions required by paragraph (j) of this AD, if those actions were performed before August 6, 2008 (the effective date AD 2008–13–20), using Boeing Service Bulletin 757–54–0015, dated February 16, 1989; Revision 1, dated December 20, 1990; or Revision 2, dated April 21, 1994 (which are not incorporated by reference in this AD).

(l) New Requirements of This AD: Inspection of Washer Stack up Sequence/Corrective Action

For Group 1, Configuration 2 airplanes identified in Boeing Special Attention Service Bulletins 757–54–0049 and 757–54–0050, Revision 2, both dated July 27, 2011: Within 3,000 flight cycles after the effective date of this AD, do a detailed inspection of the washers installed under the attachment bolts of the aft hinge fittings for correct installation sequence, in accordance with Part IV of the Accomplishment Instructions of Boeing Special Attention Service Bulletin 757–54–0049 or 757–54–0050, both Revision 2, both dated July 27, 2011, as applicable. If an incorrect installation sequence is found, before further flight, remove and reinstall the washer stack up correctly, in accordance with Part III of the Accomplishment Instructions of Boeing Special Attention Service Bulletin 757–54–0049 or 757–54–0050, Revision 2, both dated July 27, 2011, as applicable.

(m) Credit for Previous Actions

This paragraph provides credit for the actions required by paragraph (l) of this AD, if those actions were performed before the effective date of this AD using Boeing Special Attention Service Bulletin 757–54–0049, Revision 1, dated September 23, 2009; or Boeing Special Attention Service Bulletin 757–54–0050, Revision 1, dated October 7, 2009; as applicable.

(n) Alternative Methods of Compliance (AMOCs)

(1) The Manager, Seattle Aircraft Certification Office (ACO), FAA, has the authority to approve AMOCs for this AD, if requested using the procedures found in 14 CFR 39.19. In accordance with 14 CFR 39.19, send your request to your principal inspector or local Flight Standards District Office, as appropriate. If sending information directly to the manager of the ACO, send it to the attention of the person identified in the Related Information section of this AD. Information may be emailed to: *9–ANM–Seattle–ACO–AMOC–Requests@faa.gov.*

(2) Before using any approved AMOC, notify your appropriate principal inspector, or lacking a principal inspector, the manager of the local flight standards district office/certificate holding district office.

(3) An AMOC that provides an acceptable level of safety may be used for any repair required by this AD if it is approved by the Boeing Commercial Airplanes Organization Designation Authorization (ODA) that has been authorized by the Manager, Seattle ACO to make those findings. For a repair method to be approved, the repair must meet the certification basis of the airplane, and the approval must specifically refer to this AD.

(4) AMOCs approved previously in accordance with AD 2008–13–20, Amendment 39–15583 (73 FR 37786, July 2, 2008), are approved as AMOCs for the corresponding provisions of this AD.

(o) Related Information

For more information about this AD, contact Nancy Marsh, Aerospace Engineer, Airframe Branch, ANM–120S, FAA, Seattle Aircraft Certification Office, 1601 Lind Avenue SW., Renton, Washington 98057–3356; phone: 425–917–6440; fax: 425–917–6590; email: *nancy.marsh@faa.gov.*

(p) Material Incorporated by Reference

(1) The Director of the **Federal Register** approved the incorporation by reference (IBR) of the service information listed in this paragraph under 5 U.S.C. 552(a) and 1 CFR part 51.

(2) You must use this service information as applicable to do the actions required by this AD, unless the AD specifies otherwise.

(3) The following service information was approved on May 15, 2013.

(i) Boeing Special Attention Service Bulletin 757–54–0049, Revision 2, dated July 27, 2011.

(ii) Boeing Special Attention Service Bulletin 757–54–0049, Revision 1, dated September 23, 2009.

(iii) Boeing Special Attention Service Bulletin 757–54–0050, Revision 2, dated July 27, 2011.

(iv) Boeing Special Attention Service Bulletin 757–54–0050, Revision 1, dated October 7, 2009.

(4) The following service information was approved for IBR on August 6, 2008 (73 FR 37786, July 2, 2008).

(i) Boeing Service Bulletin 757–54–0050, dated July 16, 2007.

(ii) Boeing Special Attention Service Bulletin 757–54–0015, Revision 3, dated September 19, 1996.

(iii) Boeing Special Attention Service Bulletin 757–54–0049, dated July 16, 2007.

(5) For service information identified in this AD, contact Boeing Commercial Airplanes, Attention: Data & Services Management, P. O. Box 3707, MC 2H–65, Seattle, Washington 98124–2207; telephone 206–544–5000, extension 1, fax 206–766–5680; Internet *https://www.myboeingfleet.com.*

(6) You may view this service information at the FAA, Transport Airplane Directorate, 1601 Lind Avenue SW., Renton, Washington. For information on the availability of this material at the FAA, call 425–227–1221.

(7) You may view this service information that is incorporated by reference at the National Archives and Records Administration (NARA). For information on the availability of this material at NARA, call 202–741–6030, or go to: *http://www.archives.gov/federal-register/cfr/ibr-locations.html.*

Issued in Renton, Washington, on February 8, 2013.

Ali Bahrami,

Manager, Transport Airplane Directorate, Aircraft Certification Service.

[FR Doc. 2013–03903 Filed 4–9–13; 8:45 am]

BILLING CODE 4910–13–P

DEPARTMENT OF TRANSPORTATION

Federal Aviation Administration

14 CFR Part 97

[Docket No. 30893; Amdt. No. 3528]

Standard Instrument Approach Procedures, and Takeoff Minimums and Obstacle Departure Procedures; Miscellaneous Amendments

AGENCY: Federal Aviation Administration (FAA), DOT.

ACTION: Final rule.

SUMMARY: This rule establishes, amends, suspends, or revokes Standard Instrument Approach Procedures (SIAPs) and associated Takeoff Minimums and Obstacle Departure Procedures for operations at certain airports. These regulatory actions are needed because of the adoption of new or revised criteria, or because of changes occurring in the National Airspace System, such as the commissioning of new navigational facilities, adding new obstacles, or changing air traffic requirements. These changes are designed to provide safe and efficient use of the navigable airspace and to promote safe flight operations under instrument flight rules at the affected airports.

DATES: This rule is effective April 10, 2013. The compliance date for each SIAP, associated Takeoff Minimums, and ODP is specified in the amendatory provisions.

The incorporation by reference of certain publications listed in the regulations is approved by the Director of the **Federal Register** as of April 10, 2013.

ADDRESSES: Availability of matters incorporated by reference in the amendment is as follows:

For Examination—

1. FAA Rules Docket, FAA Headquarters Building, 800 Independence Avenue SW., Washington, DC 20591;

2. The FAA Regional Office of the region in which the affected airport is located;

3. The National Flight Procedures Office, 6500 South MacArthur Blvd., Oklahoma City, OK 73169 or,

4. The National Archives and Records Administration (NARA). For information on the availability of this material at NARA, call 202–741–6030, or go to:*http://www.archives.gov/federal_register/code_of_federal_regulations/ibr_locations.html.*

Availability—All SIAPs and Takeoff Minimums and ODPs are available online free of charge. Visit *http://www.nfdc.faa.gov* to register. Additionally, individual SIAP and Takeoff Minimums and ODP copies may be obtained from:

1. FAA Public Inquiry Center (APA–200), FAA Headquarters Building, 800 Independence Avenue SW., Washington, DC 20591; or

2. The FAA Regional Office of the region in which the affected airport is located.

FOR FURTHER INFORMATION CONTACT: Richard A. Dunham III, Flight Procedure Standards Branch (AFS–420), Flight Technologies and Programs Divisions, Flight Standards Service, Federal Aviation Administration, Mike Monroney Aeronautical Center, 6500 South MacArthur Blvd. Oklahoma City, OK. 73169 (Mail Address: P.O. Box 25082, Oklahoma City, OK 73125) Telephone: (405) 954–4164.

SUPPLEMENTARY INFORMATION: This rule amends Title 14 of the Code of Federal Regulations, Part 97 (14 CFR part 97), by establishing, amending, suspending, or revoking SIAPS, Takeoff Minimums and/or ODPS. The complete regulators description of each SIAP and its associated Takeoff Minimums or ODP for an identified airport is listed on FAA form documents which are incorporated by reference in this amendment under 5 U.S.C. 552(a), 1 CFR part 51, and 14 CFR 97.20. The applicable FAA Forms are FAA Forms 8260–3, 8260–4, 8260–5, 8260–15A, and 8260–15B when required by an entry on 8260–15A.

The large number of SIAPs, Takeoff Minimums and ODPs, in addition to their complex nature and the need for a special format make publication in the **Federal Register** expensive and impractical. Furthermore, airmen do not use the regulatory text of the SIAPs, Takeoff Minimums or ODPs, but instead refer to their depiction on charts printed by publishers of aeronautical materials. The advantages of incorporation by reference are realized and publication of the complete description of each SIAP, Takeoff Minimums and ODP listed on FAA forms is unnecessary. This amendment provides the affected CFR sections and specifies the types of SIAPs and the effective dates of the, associated Takeoff Minimums and ODPs. This amendment also identifies the airport and its location, the procedure, and the amendment number.

The Rule

This amendment to 14 CFR part 97 is effective upon publication of each separate SIAP, Takeoff Minimums and ODP as contained in the transmittal. Some SIAP and Takeoff Minimums and textual ODP amendments may have been issued previously by the FAA in a Flight Data Center (FDC) Notice to Airmen (NOTAM) as an emergency action of immediate flight safety relating directly to published aeronautical charts. The circumstances which created the need for some SIAP and Takeoff Minimums and ODP amendments may require making them effective in less than 30 days. For the remaining SIAPS and Takeoff Minimums and ODPS, an effective date at least 30 days after publication is provided.

Further, the SIAPs and Takeoff Minimums and ODPS contained in this amendment are based on the criteria contained in the U.S. Standard for Terminal Instrument Procedures (TERPS). In developing these SIAPS and Takeoff Minimums and ODPs, the TERPS criteria were applied to the conditions existing or anticipated at the affected airports. Because of the close and immediate relationship between these SIAPs, Takeoff Minimums and ODPs, and safety in air commerce, I find that notice and public procedures before adopting these SIAPS, Takeoff Minimums and ODPs are impracticable and contrary to the public interest and, where applicable, that good cause exists for making some SIAPs effective in less than 30 days.

Conclusion

The FAA has determined that this regulation only involves an established body of technical regulations for which frequent and routine amendments are necessary to keep them operationally current. It, therefore—(1) Is not a ''significant regulatory action'' under Executive Order 12866; (2) is not a ''significant rule '' under DOT Regulatory Policies and Procedures (44 FR 11034; February 26,1979) ; and (3) does not warrant preparation of a regulatory evaluation as the anticipated impact is so minimal. For the same reason, the FAA certifies that this amendment will not have a significant economic impact on a substantial number of small entities under the criteria of the Regulatory Flexibility Act.

List of Subjects in 14 CFR part 97:

Air Traffic Control, Airports, Incorporation by reference, and Navigation (Air).

Issued in Washington, DC on March 29, 2013.

John M. Allen,

Director, Flight Standards Service.

Adoption of the Amendment

Accordingly, pursuant to the authority delegated to me, Title 14, Code of Federal Regulations, Part 97 (14 CFR part 97) is amended by establishing, amending, suspending, or revoking Standard Instrument Approach Procedures and/or Takeoff Minimums and/or Obstacle Departure Procedures effective at 0902 UTC on the dates specified, as follows:

PART 97—STANDARD INSTRUMENT APPROACH PROCEDURES

■ 1. The authority citation for part 97 continues to read as follows:

Authority: 49 U.S.C. 106(g), 40103, 40106, 40113, 40114, 40120, 44502, 44514, 44701, 44719, 44721–44722.

■ 2. Part 97 is amended to read as follows:

Effective 2 May 2013

Novato, CA, Gnoss Field, Takeoff Minimums and Obstacle DP, Amdt 2
Fort Lauderdale, FL, Fort Lauderdale/Hollywood Intl, LOC/DME RWY 13, Amdt 1, CANCELED
Fort Lauderdale, FL, Fort Lauderdale/Hollywood Intl, RNAV (GPS) RWY 13, Amdt 2, CANCELED
Fort Lauderdale, FL, Fort Lauderdale/Hollywood Intl, RNAV (GPS) RWY 31, Amdt 2, CANCELED
Fort Lauderdale, FL, Fort Lauderdale/Hollywood Intl, RNAV (GPS) Y RWY 28R, Amdt 3
Fort Lauderdale, FL, Fort Lauderdale/Hollywood Intl, RNAV (GPS) Z RWY 10L, Amdt 3
Fort Lauderdale, FL, Fort Lauderdale/Hollywood Intl, RNAV (RNP) Y RWY 10L, Amdt 1
Fort Lauderdale, FL, Fort Lauderdale/Hollywood Intl, RNAV (RNP) Z RWY 28R, Amdt 1
Fort Lauderdale, FL, Fort Lauderdale/Hollywood Intl, Takeoff Minimums and Obstacle DP, Amdt 5
Sebring, FL, Sebring Rgnl, RNAV (GPS) RWY 1, Amdt 1
Sebring, FL, Sebring Rgnl, RNAV (GPS) Y RWY 36, Orig, CANCELED
Sebring, FL, Sebring Rgnl, Takeoff Minimums and Obstacle DP, Amdt 1
Stuart, FL, Witham Field, RNAV (GPS) RWY 12, Amdt 1

Stuart, FL, Witham Field, RNAV (GPS) RWY 30, Amdt 1
Atlanta, GA, Hartsfield—Jackson Atlanta Intl, ILS OR LOC RWY 8L, ILS RWY 8L (SA CAT I), ILS RWY 8L (CAT II), ILS RWY 8L (CAT III), Amdt 4
Atlanta, GA, Hartsfield—Jackson Atlanta Intl, ILS OR LOC RWY 8R, Amdt 60
Atlanta, GA, Hartsfield—Jackson Atlanta Intl, ILS OR LOC RWY 9L, Amdt 9
Atlanta, GA, Hartsfield—Jackson Atlanta Intl, ILS OR LOC RWY 9R, ILS RWY 9R (SA CAT I), ILS RWY 9R (CAT II), ILS RWY 9R (CAT III), Amdt 18
Atlanta, GA, Hartsfield—Jackson Atlanta Intl, ILS OR LOC RWY 10, ILS RWY 10 (SA CAT I), ILS RWY 10 (CAT II), ILS RWY 10 (CAT III), Amdt 3
Atlanta, GA, Hartsfield—Jackson Atlanta Intl, ILS OR LOC RWY 26L, Amdt 20
Atlanta, GA, Hartsfield—Jackson Atlanta Intl, ILS OR LOC RWY 26R, ILS RWY 26R (SA CAT I), ILS RWY 26R (SA CAT II), Amdt 6
Atlanta, GA, Hartsfield—Jackson Atlanta Intl, ILS OR LOC RWY 27L, ILS RWY 27L (SA CAT I), ILS RWY 27L (CAT II), Amdt 17
Atlanta, GA, Hartsfield—Jackson Atlanta Intl, ILS OR LOC RWY 27R, Amdt 5
Atlanta, GA, Hartsfield—Jackson Atlanta Intl, ILS OR LOC RWY 28, ILS RWY 28 (SA CAT I), ILS RWY 28 (CAT II), Amdt 3
Atlanta, GA, Hartsfield—Jackson Atlanta Intl, ILS PRM RWY 8L, ILS PRM RWY 8L (SA CAT I), ILS PRM RWY 8L (CAT II), ILS PRM RWY 8L (CAT III) (SIMULTANEOUS CLOSE PARALLEL), Amdt 1
Atlanta, GA, Hartsfield—Jackson Atlanta Intl, ILS PRM RWY 8R (SIMULTANEOUS CLOSE PARALLEL), Amdt 1
Atlanta, GA, Hartsfield—Jackson Atlanta Intl, ILS PRM RWY 9L (SIMULTANEOUS CLOSE PARALLEL), Amdt 1
Atlanta, GA, Hartsfield—Jackson Atlanta Intl, ILS PRM RWY 9R, ILS PRM RWY 9R (SA CAT I), ILS PRM RWY 9R (CAT II), ILS PRM RWY 9R (CAT III) (SIMULTANEOUS CLOSE PARALLEL), Amdt 1
Atlanta, GA, Hartsfield—Jackson Atlanta Intl, ILS PRM RWY 10, ILS PRM RWY 10 (SA CAT I), ILS PRM RWY 10 (CAT II), ILS PRM RWY 10 (CAT III) (SIMULTANEOUS CLOSE PARALLEL), Amdt 3
Atlanta, GA, Hartsfield—Jackson Atlanta Intl, ILS PRM RWY 26L (SIMULTANEOUS CLOSE PARALLEL), Amdt 1
Atlanta, GA, Hartsfield—Jackson Atlanta Intl, ILS PRM RWY 26R, ILS PRM RWY 26R (SA CAT I), ILS PRM RWY 26R (SA CAT II) (SIMULTANEOUS CLOSE PARALLEL), Amdt 2
Atlanta, GA, Hartsfield—Jackson Atlanta Intl, ILS PRM RWY 27L, ILS PRM RWY 27L (SA CAT I), ILS PRM RWY 27L (CAT II) (SIMULTANEOUS CLOSE PARALLEL), Amdt 2
Atlanta, GA, Hartsfield—Jackson Atlanta Intl, ILS PRM RWY 27R (SIMULTANEOUS CLOSE PARALLEL), Amdt 1
Atlanta, GA, Hartsfield—Jackson Atlanta Intl, ILS PRM RWY 28, ILS PRM RWY 28 (SA CAT I), ILS PRM RWY 28 (CAT II) (SIMULTANEOUS CLOSE PARALLEL), Amdt 3
Atlanta, GA, Hartsfield—Jackson Atlanta Intl, RNAV (GPS) Y RWY 8R, Amdt 3
Atlanta, GA, Hartsfield—Jackson Atlanta Intl, RNAV (GPS) Y RWY 9L, Amdt 3
Atlanta, GA, Hartsfield—Jackson Atlanta Intl, RNAV (GPS) Y RWY 9R, Amdt 3
Atlanta, GA, Hartsfield—Jackson Atlanta Intl, RNAV (GPS) Y RWY 10, Amdt 3
Atlanta, GA, Hartsfield—Jackson Atlanta Intl, RNAV (GPS) Y RWY 26L, Amdt 3
Atlanta, GA, Hartsfield—Jackson Atlanta Intl, RNAV (GPS) Y RWY 26R, Amdt 3
Atlanta, GA, Hartsfield—Jackson Atlanta Intl, RNAV (GPS) Y RWY 27L, Amdt 4
Atlanta, GA, Hartsfield—Jackson Atlanta Intl, RNAV (GPS) Y RWY 27R, Amdt 3
Atlanta, GA, Hartsfield—Jackson Atlanta Intl, RNAV (GPS) Y RWY 28, Amdt 3
Coeur D'Alene, ID, Coeur D'Alene—Pappy Boyington Field, RNAV (GPS) RWY 6, Orig-B
Chicago, IL, Chicago O'Hare Intl, ILS OR LOC RWY 9L, ILS RWY 9L (SA CAT I), ILS RWY 9L (CAT II), ILS RWY 9L (CAT III), Amdt 2
Chicago, IL, Chicago O'Hare Intl, ILS OR LOC RWY 9R, Amdt 10
Chicago, IL, Chicago O'Hare Intl, ILS OR LOC RWY 10L, ILS RWY 10L (SA CAT I), ILS RWY 10L (CAT II), ILS RWY 10L (CAT III), Amdt 17
Chicago, IL, Chicago O'Hare Intl, ILS OR LOC RWY 27L, ILS RWY 27L (SA CAT I), ILS RWY 27L (CAT II), ILS RWY 27L (CAT III), Amdt 29
Chicago, IL, Chicago O'Hare Intl, ILS OR LOC RWY 27R, ILS RWY 27R (SA CAT I), ILS RWY 27R (CAT II), ILS RWY 27R (CAT III), Amdt 2
Chicago, IL, Chicago O'Hare Intl, ILS OR LOC RWY 28R, ILS RWY 28R (SA CAT I), ILS RWY 28R (CAT II), ILS RWY 28R (CAT III), Amdt 16
Chicago, IL, Chicago O'Hare Intl, RNAV (GPS) RWY 9L, Amdt 2
Chicago, IL, Chicago O'Hare Intl, RNAV (GPS) RWY 9R, Amdt 3
Chicago, IL, Chicago O'Hare Intl, RNAV (GPS) RWY 10L, Amdt 4
Chicago, IL, Chicago O'Hare Intl, RNAV (GPS) RWY 27L, Amdt 3
Chicago, IL, Chicago O'Hare Intl, RNAV (GPS) RWY 27R, Amdt 2
Chicago, IL, Chicago O'Hare Intl, RNAV (GPS) RWY 28R, Amdt 3
Kankakee, IL, Greater Kankakee, ILS OR LOC RWY 4, Amdt 7
Kankakee, IL, Greater Kankakee, RNAV (GPS) RWY 4, Amdt 1
Kankakee, IL, Greater Kankakee, RNAV (GPS) RWY 16, Amdt 1
Kankakee, IL, Greater Kankakee, RNAV (GPS) RWY 22, Amdt 1
Kankakee, IL, Greater Kankakee, RNAV (GPS) RWY 34, Amdt 1
Kankakee, IL, Greater Kankakee, Takeoff Minimums and Obstacle DP, Amdt 1
Kankakee, IL, Greater Kankakee, VOR RWY 4, Amdt 6A
Kankakee, IL, Greater Kankakee, VOR RWY 22, Amdt 7B
Lafayette, LA, Lafayette Rgnl, ILS OR LOC RWY 22L, Amdt 5
Lafayette, LA, Lafayette Rgnl, RNAV (GPS) RWY 22L, Amdt 1
Great Barrington, MA, Walter J. Koladza, Takeoff Minimums and Obstacle DP, Amdt 3
Romeo, MI, Romeo State, RNAV (GPS) RWY 18, Amdt 1
Romeo, MI, Romeo State, RNAV (GPS) RWY 36, Amdt 1
Romeo, MI, Romeo State, Takeoff Minimums and Obstacle DP, Amdt 5
Minneapolis, MN, Minneapolis-St Paul Intl/ Wold-Chamberlain, CONVERGING ILS RWY 30L, Amdt 1
Minneapolis, MN, Minneapolis-St Paul Intl/ Wold-Chamberlain, CONVERGING ILS RWY 30R, Amdt 2
Minneapolis, MN, Minneapolis-St Paul Intl/ Wold-Chamberlain, CONVERGING ILS RWY 35, Amdt 3
Minneapolis, MN, Minneapolis-St Paul Intl/ Wold-Chamberlain, ILS OR LOC RWY 12L, ILS RWY 12L (SA CAT I), ILS RWY 12L (CAT II), ILS RWY 12L (CAT III), Amdt 9
Minneapolis, MN, Minneapolis-St Paul Intl/ Wold-Chamberlain, ILS OR LOC RWY 12R, ILS RWY 12R (SA CAT I), ILS RWY 12R (CAT II), ILS RWY 12R (CAT III), Amdt 10
Minneapolis, MN, Minneapolis-St Paul Intl/ Wold-Chamberlain, ILS OR LOC RWY 30L, ILS RWY 30L (SA CAT I), ILS RWY 30L (CAT II), Amdt 45
Minneapolis, MN, Minneapolis-St Paul Intl/ Wold-Chamberlain, ILS OR LOC RWY 30R, Amdt 14
Minneapolis, MN, Minneapolis-St Paul Intl/ Wold-Chamberlain, ILS OR LOC RWY 35, ILS RWY 35 (SA CAT I), ILS RWY 35 (CAT II), ILS RWY 35 (CAT III), Amdt 3
Minneapolis, MN, Minneapolis-St Paul Intl/ Wold-Chamberlain, LOC RWY 4, Amdt 1A
Minneapolis, MN, Minneapolis-St Paul Intl/ Wold-Chamberlain, LOC RWY 17, Amdt 1A
Minneapolis, MN, Minneapolis-St Paul Intl/ Wold-Chamberlain, LOC RWY 22, Amdt 1A
Minneapolis, MN, Minneapolis-St Paul Intl/ Wold-Chamberlain, RNAV (GPS) RWY 4, Amdt 2
Minneapolis, MN, Minneapolis-St Paul Intl/ Wold-Chamberlain, RNAV (GPS) RWY 12L, Amdt 3
Minneapolis, MN, Minneapolis-St Paul Intl/ Wold-Chamberlain, RNAV (GPS) RWY 12R, Amdt 2
Minneapolis, MN, Minneapolis-St Paul Intl/ Wold-Chamberlain, RNAV (GPS) RWY 22, Amdt 1A
Minneapolis, MN, Minneapolis-St Paul Intl/ Wold-Chamberlain, RNAV (GPS) RWY 30L, Amdt 3
Minneapolis, MN, Minneapolis-St Paul Intl/ Wold-Chamberlain, RNAV (GPS) RWY 30R, Amdt 2
Minneapolis, MN, Minneapolis-St Paul Intl/ Wold-Chamberlain, RNAV (GPS) Z RWY 35, Amdt 2
New Ulm, MN, New Ulm Muni, NDB RWY 15, Amdt 2
New Ulm, MN, New Ulm Muni, NDB RWY 33, Amdt 2
New Ulm, MN, New Ulm Muni, RNAV (GPS) RWY 15, Orig
New Ulm, MN, New Ulm Muni, RNAV (GPS) RWY 33, Orig
New Ulm, MN, New Ulm Muni, Takeoff Minimums and Obstacle DP, Orig
Gideon, MO, Gideon Memorial, RNAV (GPS) RWY 15, Orig
Gideon, MO, Gideon Memorial, RNAV (GPS) RWY 33, Orig

Gideon, MO, Gideon Memorial, Takeoff Minimums and Obstacle DP, Orig
Gideon, MO, Gideon Memorial, VOR RWY 15, Amdt 3
Grenada, MS, Grenada Muni, RNAV (GPS) RWY 4, Amdt 1
Grenada, MS, Grenada Muni, RNAV (GPS) RWY 13, Amdt 1
Grenada, MS, Grenada Muni, RNAV (GPS) RWY 22, Amdt 1
Grenada, MS, Grenada Muni, RNAV (GPS) RWY 31, Amdt 1
Grenada, MS, Grenada Muni, Takeoff Minimums and Obstacle DP, Amdt 2
Beaufort, NC, Michael J. Smith Field, LOC RWY 26, Amdt 2, CANCELED
Beaufort, NC, Michael J. Smith Field, NDB RWY 21, Amdt 2
Beaufort, NC, Michael J. Smith Field, RNAV (GPS) RWY 3, Amdt 2
Beaufort, NC, Michael J. Smith Field, RNAV (GPS) RWY 21, Amdt 2
Beaufort, NC, Michael J. Smith Field, RNAV (GPS) RWY 26, Amdt 2
Beaufort, NC, Michael J. Smith Field, Takeoff Minimums and Obstacle DP, Amdt 4
Newark, NJ, Newark Liberty Intl, ILS OR LOC RWY 22L, ILS RWY 22L (SA CAT I), ILS RWY 22L (CAT II), ILS RWY 22L (CAT III), Amdt 13
Newburgh, NY, Stewart Intl, ILS OR LOC RWY 9, ILS RWY 9 (SA CAT I), ILS RWY 9 (CAT II), ILS RWY 9 (CAT III), Amdt 13
Hazleton, PA, Hazleton Muni, LOC RWY 28, Amdt 6
Hazleton, PA, Hazleton Muni, RNAV (GPS) RWY 10, Amdt 1
Hazleton, PA, Hazleton Muni, RNAV (GPS) RWY 28, Orig
Hazleton, PA, Hazleton Muni, Takeoff Minimums and Obstacle DP, Amdt 2
Hazleton, PA, Hazleton Muni, VOR RWY 10, Amdt 11
Hazleton, PA, Hazleton Muni, VOR RWY 28, Amdt 9
Amarillo, TX, Tradewind, GPS RWY 35, Orig-B, CANCELED
Amarillo, TX, Tradewind, RNAV (GPS) RWY 35, Orig
Childress, TX, Childress Muni, RNAV (GPS) RWY 36, Amdt 1
Dallas-Fort Worth, TX, Dallas/Fort Worth Intl, CONVERGING ILS RWY 13R, Amdt 7
Dallas-Fort Worth, TX, Dallas/Fort Worth Intl, CONVERGING ILS RWY 17R, Amdt 9
Dallas-Fort Worth, TX, Dallas/Fort Worth Intl, CONVERGING ILS RWY 18L, Amdt 2
Dallas-Fort Worth, TX, Dallas/Fort Worth Intl, CONVERGING ILS RWY 18R, Amdt 6
Dallas-Fort Worth, TX, Dallas/Fort Worth Intl, CONVERGING ILS RWY 31R, Amdt 8
Dallas-Fort Worth, TX, Dallas/Fort Worth Intl, CONVERGING ILS RWY 35L, Amdt 4
Dallas-Fort Worth, TX, Dallas/Fort Worth Intl, CONVERGING ILS RWY 36L, Amdt 2
Dallas-Fort Worth, TX, Dallas/Fort Worth Intl, CONVERGING ILS RWY 36R, Amdt 3
Dallas-Fort Worth, TX, Dallas/Fort Worth Intl, ILS OR LOC RWY 17C, ILS RWY 17C (CAT II), ILS RWY 17C (CAT III), ILS RWY 17C (SA CAT I), Amdt 10
Dallas-Fort Worth, TX, Dallas/Fort Worth Intl, ILS OR LOC RWY 17L, ILS RWY 17L (SA CAT I), ILS RWY 17L (CAT II), ILS RWY 17L (CAT III), Amdt 6
Dallas-Fort Worth, TX, Dallas/Fort Worth Intl, ILS OR LOC RWY 17R, ILS RWY 17R (SA CAT I), ILS RWY 17R (SA CAT II), Amdt 23
Dallas-Fort Worth, TX, Dallas/Fort Worth Intl, ILS OR LOC RWY 18L, Amdt 2
Dallas-Fort Worth, TX, Dallas/Fort Worth Intl, ILS OR LOC RWY 18R, ILS RWY 18R (SA CAT I), ILS RWY 18R (CAT II), ILS RWY 18R (CAT III), Amdt 8
Dallas-Fort Worth, TX, Dallas/Fort Worth Intl, ILS OR LOC RWY 31R, Amdt 14
Dallas-Fort Worth, TX, Dallas/Fort Worth Intl, ILS OR LOC RWY 35L, Amdt 5
Dallas-Fort Worth, TX, Dallas/Fort Worth Intl, ILS OR LOC RWY 35R, ILS RWY 35R (SA CAT I), ILS RWY 35R (CAT II), ILS RWY 35R (CAT III), Amdt 4
Dallas-Fort Worth, TX, Dallas/Fort Worth Intl, ILS OR LOC RWY 36L, Amdt 2
Dallas-Fort Worth, TX, Dallas/Fort Worth Intl, ILS OR LOC RWY 36R, Amdt 5
Dallas-Fort Worth, TX, Dallas/Fort Worth Intl, RNAV (GPS) RWY 17C, Amdt 2
Dallas-Fort Worth, TX, Dallas/Fort Worth Intl, RNAV (GPS) RWY 17L, Amdt 4
Dallas-Fort Worth, TX, Dallas/Fort Worth Intl, RNAV (GPS) RWY 17R, Amdt 2
Dallas-Fort Worth, TX, Dallas/Fort Worth Intl, RNAV (GPS) RWY 18L, Amdt 1
Dallas-Fort Worth, TX, Dallas/Fort Worth Intl, RNAV (GPS) RWY 18R, Amdt 1
Dallas-Fort Worth, TX, Dallas/Fort Worth Intl, RNAV (GPS) RWY 35L, Amdt 2
Dallas-Fort Worth, TX, Dallas/Fort Worth Intl, RNAV (GPS) RWY 35R, Amdt 3
Dallas-Fort Worth, TX, Dallas/Fort Worth Intl, RNAV (GPS) RWY 36L, Amdt 3
Dallas-Fort Worth, TX, Dallas/Fort Worth Intl, RNAV (GPS) RWY 36R, Amdt 3
Dallas-Fort Worth, TX, Dallas/Fort Worth Intl, RNAV (GPS) Y RWY 13R, Amdt 2
Dallas-Fort Worth, TX, Dallas/Fort Worth Intl, RNAV (GPS) Y RWY 31L, Amdt 1
Dallas-Fort Worth, TX, Dallas/Fort Worth Intl, RNAV (GPS) Y RWY 31R, Amdt 2
Dallas-Fort Worth, TX, Dallas/Fort Worth Intl, RNAV (RNP) Z RWY 13R, Amdt 1
Dallas-Fort Worth, TX, Dallas/Fort Worth Intl, RNAV (RNP) Z RWY 31L, Amdt 1
Dallas-Fort Worth, TX, Dallas/Fort Worth Intl, RNAV (RNP) Z RWY 31R, Amdt 2
Dallas-Fort Worth, TX, Dallas/Fort Worth Intl, VOR RWY 13R, Amdt 1B
Dallas-Fort Worth, TX, Dallas/Fort Worth Intl, VOR RWY 31L, Orig-B
Levelland, TX, Levelland Muni, RNAV (GPS) RWY 17, Amdt 1
Levelland, TX, Levelland Muni, RNAV (GPS) RWY 35, Amdt 1
Waco, TX, TSTC Waco, ILS OR LOC RWY 17L, Amdt 13
Waco, TX, TSTC Waco, RNAV (GPS) RWY 17L, Amdt 1
Waco, TX, TSTC Waco, RNAV (GPS) RWY 35R, Amdt 1
Wink, TX, Winkler County, RNAV (GPS) RWY 13, Amdt 1
Wink, TX, Winkler County, RNAV (GPS) RWY 31, Amdt 1
Richmond, VA, Richmond Executive-Chesterfield County, Takeoff Minimums and Obstacle DP, Amdt 4
Pullman/Moscow, ID, WA, Pullman/Moscow Rgnl, RNAV (GPS) Y RWY 6, Amdt 2A
Pullman/Moscow, ID, WA, Pullman/Moscow Rgnl, RNAV (RNP) Z RWY 6, Orig
Ashland, WI, John F Kennedy Memorial, RNAV (GPS) RWY 2, Amdt 1
Ashland, WI, John F Kennedy Memorial, RNAV (GPS) RWY 13, Amdt 1
Ashland, WI, John F Kennedy Memorial, RNAV (GPS) RWY 20, Amdt 1
Ashland, WI, John F Kennedy Memorial, RNAV (GPS) RWY 31, Amdt 1
Ashland, WI, John F Kennedy Memorial, VOR RWY 2, Amdt 6, CANCELED
Ashland, WI, John F Kennedy Memorial, VOR RWY 31, Amdt 7, CANCELED

Rescinded

On March 4, 2013 (77 FR 14011), the FAA published an Amendment in Docket No. 30887, Amdt No. 3522 to Part 97 of the Federal Aviation Regulations under section 97.33. The following entry for Fort Myers, FL, effective 2 May 2013 is hereby rescinded in its entirety:

Fort Myers, FL, Southwest Florida Intl, RNAV (GPS) RWY 24, Amdt 2

[FR Doc. 2013–08082 Filed 4–9–13; 8:45 am]

BILLING CODE 4910–13–P

DEPARTMENT OF TRANSPORTATION

Federal Aviation Administration

14 CFR Part 97

[Docket No. 30894; Amdt. No. 3529]

Standard Instrument Approach Procedures, and Takeoff Minimums and Obstacle Departure Procedures; Miscellaneous Amendments

AGENCY: Federal Aviation Administration (FAA), DOT.

ACTION: Final rule.

SUMMARY: This rule establishes, amends, suspends, or revokes Standard Instrument Approach Procedures (SIAPs) and associated Takeoff Minimums and Obstacle Departure Procedures for operations at certain airports. These regulatory actions are needed because of the adoption of new or revised criteria, or because of changes occurring in the National Airspace System, such as the commissioning of new navigational facilities, adding new obstacles, or changing air traffic requirements. These changes are designed to provide safe and efficient use of the navigable airspace and to promote safe flight operations under instrument flight rules at the affected airports.

DATES: This rule is effective April 10, 2013. The compliance date for each SIAP, associated Takeoff Minimums, and ODP is specified in the amendatory provisions.

The incorporation by reference of certain publications listed in the regulations is approved by the Director

of the Federal Register as of April 10, 2013.

ADDRESSES: Availability of matter incorporated by reference in the amendment is as follows:

For Examination—

1. FAA Rules Docket, FAA Headquarters Building, 800 Independence Avenue SW., Washington, DC 20591;

2. The FAA Regional Office of the region in which the affected airport is located;

3. The National Flight Procedures Office, 6500 South MacArthur Blvd., Oklahoma City, OK 73169 or,

4. The National Archives and Records Administration (NARA). For information on the availability of this material at NARA, call 202–741–6030, or go to:*http://www.archives.gov/federal_register/code_of_federal_regulations/ibr_locations.html.*

Availability—All SIAPs are available online free of charge. Visit *nfdc.faa.gov* to register. Additionally, individual SIAP and Takeoff Minimums and ODP copies may be obtained from:

1. FAA Public Inquiry Center (APA–200), FAA Headquarters Building, 800 Independence Avenue SW., Washington, DC 20591; or

2. The FAA Regional Office of the region in which the affected airport is located.

FOR FURTHER INFORMATION CONTACT: Richard A. Dunham III, Flight Procedure Standards Branch (AFS–420) Flight Technologies and Programs Division, Flight Standards Service, Federal Aviation Administration, Mike Monroney Aeronautical Center, 6500 South MacArthur Blvd., Oklahoma City, OK 73169 (Mail Address: P.O. Box 25082 Oklahoma City, OK 73125) telephone: (405) 954–4164.

SUPPLEMENTARY INFORMATION: This rule amends Title 14, Code of Federal Regulations, Part 97 (14 CFR part 97) by amending the referenced SIAPs. The complete regulatory description of each SIAP is listed on the appropriate FAA Form 8260, as modified by the National Flight Data Center (FDC)/Permanent Notice to Airmen (P–NOTAM), and is incorporated by reference in the amendment under 5 U.S.C. 552(a), 1 CFR part 51, and § 97.20 of Title 14 of the Code of Federal Regulations.

The large number of SIAPs, their complex nature, and the need for a special format make their verbatim publication in the **Federal Register** expensive and impractical. Further, airmen do not use the regulatory text of the SIAPs, but refer to their graphic depiction on charts printed by publishers of aeronautical materials. Thus, the advantages of incorporation by reference are realized and publication of the complete description of each SIAP contained in FAA form documents is unnecessary. This amendment provides the affected CFR sections and specifies the types of SIAP and the corresponding effective dates. This amendment also identifies the airport and its location, the procedure and the amendment number.

The Rule

This amendment to 14 CFR part 97 is effective upon publication of each separate SIAP as amended in the transmittal. For safety and timeliness of change considerations, this amendment incorporates only specific changes contained for each SIAP as modified by FDC/P–NOTAMs.

The SIAPs, as modified by FDC P–NOTAM, and contained in this amendment are based on the criteria contained in the U.S. Standard for Terminal Instrument Procedures (TERPS). In developing these changes to SIAPs, the TERPS criteria were applied only to specific conditions existing at the affected airports. All SIAP amendments in this rule have been previously issued by the FAA in a FDC NOTAM as an emergency action of immediate flight safety relating directly to published aeronautical charts. The circumstances which created the need for all these SIAP amendments requires making them effective in less than 30 days.

Because of the close and immediate relationship between these SIAPs and safety in air commerce, I find that notice and public procedure before adopting these SIAPs are impracticable and contrary to the public interest and, where applicable, that good cause exists for making these SIAPs effective in less than 30 days.

Conclusion

The FAA has determined that this regulation only involves an established body of technical regulations for which frequent and routine amendments are necessary to keep them operationally current. It, therefore— (1) Is not a ''significant regulatory action'' under Executive Order 12866; (2) is not a ''significant rule'' under DOT regulatory Policies and Procedures (44 FR 11034; February 26, 1979); and (3) does not warrant preparation of a regulatory evaluation as the anticipated impact is so minimal. For the same reason, the FAA certifies that this amendment will not have a significant economic impact on a substantial number of small entities under the criteria of the Regulatory Flexibility Act.

List of Subjects in 14 CFR part 97:

Air Traffic Control, Airports, Incorporation by reference, and Navigation (Air).

Issued in Washington, DC on March 29, 2013.

John M. Allen,

Director, Flight Standards Service.

Adoption of the Amendment

Accordingly, pursuant to the authority delegated to me, Title 14, Code of Federal regulations, Part 97, 14 CFR part 97, is amended by amending Standard Instrument Approach Procedures, effective at 0901 UTC on the dates specified, as follows:

PART 97—STANDARD INSTRUMENT APPROACH PROCEDURES

■ 1. The authority citation for part 97 continues to read as follows:

Authority: 49 U.S.C. 106(g), 40103, 40106, 40113, 40114, 40120, 44502, 44514, 44701, 44719, 44721–44722.

§§ 97.23, 97.25, 97.27, 97.29, 97.31, 97.33, 97.35 [Amended]

■ 2. Part 97 is amended to read as follows:

By amending: § 97.23 VOR, VOR/DME, VOR or TACAN, and VOR/DME or TACAN; § 97.25 LOC, LOC/DME, LDA, LDA/DME, SDF, SDF/DME; § 97.27 NDB, NDB/DME; § 97.29 ILS, ILS/DME, MLS, MLS/DME, MLS/RNAV; § 97.31 RADAR SIAPs; § 97.33 RNAV SIAPs; and § 97.35 COPTER SIAPs, Identified as follows:

** * * Effective Upon Publication*

AIRAC Date	State	City	Airport	FDC No.	FDC Date	Subject
2–May–13	TX	Waco	McGregor Executive	3/2024	03/15/13	RNAV (GPS) RWY 35, Amdt 1
2–May–13	TX	Waco	McGregor Executive	3/2029	03/15/13	RNAV (GPS) RWY 17, Amdt 1
2–May–13	MA	Marshfield	Marshfield Muni—George Harlow Field.	3/2685	03/12/13	NDB RWY 24, Amdt 2

AIRAC Date	State	City	Airport	FDC No.	FDC Date	Subject
2–May–13	MA	Marshfield	Marshfield Muni—George Harlow Field.	3/2686	03/12/13	NDB RWY 6, Amdt 4B
2–May–13	PA	Altoona	Altoona-Blair County	3/2687	03/12/13	ILS OR LOC RWY 21, Amdt 7
2–May–13	PA	Altoona	Altoona-Blair County	3/2688	03/12/13	RNAV (GPS) RWY 21, Amdt 1
2–May–13	ME	Belfast	Belfast Muni	3/2773	03/12/13	RNAV (GPS) RWY 15, Orig
2–May–13	ME	Belfast	Belfast Muni	3/2774	03/12/13	RNAV (GPS) RWY 33, Orig
2–May–13	ME	Belfast	Belfast Muni	3/2775	03/12/13	NDB RWY 15, Amdt 3A
2–May–13	FL	Stuart	Witham Field	3/2776	03/12/13	Takeoff Minimums and (Obstacle) DP, Amdt 2A
2–May–13	FL	Avon Park	Avon Park Executive	3/2780	03/12/13	RNAV (GPS) RWY 5, Orig
2–May–13	FL	Avon Park	Avon Park Executive	3/2781	03/12/13	RNAV (GPS) RWY 10, Orig
2–May–13	AZ	Safford	Safford Rgnl	3/2866	03/12/13	RNAV (GPS) RWY 30, Orig
2–May–13	AZ	Safford	Safford Rgnl	3/2867	03/12/13	RNAV (GPS) RWY 12, Orig–A
2–May–13	WA	Seattle	Seattle-Tacoma Intl	3/3081	03/12/13	RNAV (GPS) Y RWY 34L, Amdt 1
2–May–13	WA	Seattle	Seattle-Tacoma Intl	3/3109	03/12/13	ILS OR LOC RWY 34R, Amdt 2
2–May–13	MS	Greenwood	Greenwood-Leflore	3/3110	03/12/13	RNAV (GPS) RWY 18, Amdt 2
2–May–13	CA	Watsonville	Watsonville Muni	3/3115	03/12/13	RNAV (GPS) RWY 2, Amdt 1
2–May–13	IL	Lacon	Marshall County	3/3173	03/12/13	VOR RWY 13, Amdt 2A
2–May–13	PA	Altoona	Altoona-Blair County	3/3234	03/12/13	RNAV (GPS) Z RWY 3, Orig
2–May–13	FL	St Petersburg	Albert Whitted	3/3246	03/12/13	RNAV (GPS) RWY 7, Amdt 3
2–May–13	MA	Boston	General Edward Lawrence Logan Intl.	3/3850	03/12/13	ILS OR LOC RWY 33L, ILS RWY 33L (SA CAT I), ILS RWY 33L (CAT II), ILS RWY 33L (CAT III), Amdt 5
2–May–13	IL	Moline	Quad City Intl	3/3905	03/12/13	RNAV (GPS) RWY 9, Amdt 1
2–May–13	IL	Moline	Quad City Intl	3/3907	03/12/13	RNAV (GPS) RWY 27, Amdt 1
2–May–13	IL	Moline	Quad City Intl	3/3908	03/12/13	RNAV (GPS) RWY 13, Amdt 1
2–May–13	IL	Moline	Quad City Intl	3/3909	03/12/13	RNAV (GPS) RWY 31, Amdt 1
2–May–13	MA	Taunton	Taunton Muni—King Field	3/4303	03/25/13	NDB RWY 30, Amdt 5
2–May–13	MA	Taunton	Taunton Muni—King Field	3/4304	03/25/13	RNAV (GPS) RWY 30, Orig
2–May–13	GA	Cartersville	Cartersville	3/4613	03/25/13	RNAV (GPS) RWY 1, Amdt 1
2–May–13	GA	Cartersville	Cartersville	3/4619	03/25/13	RNAV (GPS) RWY 19, Amdt 1
2–May–13	NC	Rockingham	Richmond County	3/4648	03/25/13	RNAV (GPS) RWY 32, Orig
2–May–13	WA	Seattle	Seattle-Tacoma Intl	3/4659	03/25/13	ILS OR LOC RWY 16L, ILS RWY 16L (SA CAT I), ILS RWY 16L (CAT II), ILS RWY 16L (CAT III), Amdt 5
2–May–13	WA	Seattle	Seattle-Tacoma Intl	3/4660	03/25/13	ILS OR LOC RWY 16R, ILS RWY 16R (SA CAT I), ILS RWY 16R (CAT II), ILS RWY 16R (CAT III), Amdt 2
2–May–13	WA	Seattle	Seattle-Tacoma Intl	3/4665	03/25/13	ILS OR LOC RWY 34C, ILS RWY 34C (SA CAT I), ILS RWY 34C (SA CAT II) Amdt 3
2–May–13	VA	Richmond	Richmond Intl	3/4790	03/25/13	VOR RWY 34, Amdt 23A
2–May–13	IL	Decatur	Decatur	3/5005	03/25/13	ILS OR LOC RWY 6, Amdt 13E
2–May–13	MN	Minneapolis	Anoka County-Blaine Arpt(Janes Field).	3/5150	03/25/13	RNAV (GPS) RWY 18, Orig-B
2–May–13	MN	Minneapolis	Anoka County-Blaine Arpt(Janes Field).	3/5151	03/25/13	VOR RWY 9, Amdt 12
2–May–13	MN	Minneapolis	Anoka County-Blaine Arpt(Janes Field).	3/5152	03/25/13	RNAV (GPS) RWY 9, Orig-B
2–May–13	KY	Marion	Marion-Crittenden County	3/5436	03/25/13	RNAV (GPS) RWY 7, Amdt 1
2–May–13	KY	Marion	Marion-Crittenden County	3/5437	03/25/13	RNAV (GPS) RWY 25, Amdt 1
2–May–13	MS	Lexington	C. A. Moore	3/5479	03/25/13	VOR/DME OR GPS A, Orig-A
2–May–13	CQ	Saipan Island	Francisco C. Ada/Saipan Intl	3/5542	03/15/13	NDB/DME RWY 25, Amdt 2C
2–May–13	SC	Kingstree	Williamsburg Rgnl	3/5631	03/25/13	NDB RWY 14, Amdt 4
2–May–13	AK	Barter Island LRRS	Barter Island LRRS	3/5854	03/25/13	RNAV (GPS) RWY 25, Orig-A
2–May–13	AK	Barter Island LRRS	Barter Island LRRS	3/5855	03/25/13	RNAV (GPS) RWY 7, Orig-A
2–May–13	CO	Lamar	Lamar Muni	3/5924	03/25/13	RNAV (GPS) RWY 18, Amdt 1A
2–May–13	AZ	Flagstaff	Flagstaff Pulliam	3/5930	03/25/13	RNAV (GPS) RWY 3, Orig
2–May–13	CO	Lamar	Lamar Muni	3/7407	03/26/13	VOR RWY 18, Amdt 10B

[FR Doc. 2013–08085 Filed 4–9–13; 8:45 am]

BILLING CODE 4910–13–P

DEPARTMENT OF ENERGY

Federal Energy Regulatory Commission

18 CFR Part 376

[Docket No. RM13–10–000; Order No. 778]

Continuity of Operations Plan

AGENCY: Federal Energy Regulatory Commission, DOE.

ACTION: Final rule.

SUMMARY: In this Final Rule the Commission revises its Continuity of Operations Plan regulations to revise its hierarchy of delegation of Commission authority during emergency conditions, principally to ensure that, during emergency conditions, there are staff members located outside the National Capital Region to whom authority is delegated.

DATES: This rule is effective April 10, 2013.

FOR FURTHER INFORMATION CONTACT:

Elizabeth Molloy, Office of the General Counsel, Federal Energy Regulatory Commission, Room 102–67, 888 First St. NE., Washington, DC 20426, (202) 502–8771.

Lawrence R. Greenfield, Office of the General Counsel, Federal Energy Regulatory Commission, Room 102–15, 888 First St. NE., Washington, DC 20426, (202) 502–6415 Loni Silva, Office of the General Counsel, Federal Energy Regulatory Commission, Room 10J–05, 888 First St. NE., Washington, DC 20426, (202) 502–6233

SUPPLEMENTARY INFORMATION:

Before Commissioners: Jon Wellinghoff, Chairman; Philip D. Moeller, John R. Norris, Cheryl A. LaFleur, and Tony Clark.

Issued April 4, 2013.

1. The Office of Energy Projects and the Office of Electric Reliability maintain regional offices outside the National Capital Region. This Final Rule revises the Commission's Continuity of Operations Plan (COOP) regulations to incorporate its regional offices into the hierarchy of delegation of Commission authority during emergency conditions, and also to revise that hierarchy.

Discussion

2. This Final Rule revises the Commission's COOP regulations to expand the hierarchy list to incorporate staff members at its regional offices; this revision recognizes that staff members working in the National Capital Region may be unavailable or incapable of acting to assume authority during an emergency, and accordingly this revision allows for delegation of authority to staff members located in regional offices outside the National Capital Region. In addition, this Final Rule revises the hierarchy list to change the order of positions of the General Counsel and Deputy General Counsels on that list, and adds to the hierarchy list the Deputy Director of the Office of Enforcement who inadvertently was not included when the regulations were earlier revised.

Regulatory Flexibility Act

3. The Regulatory Flexibility Act of 1980 (RFA)[1] generally requires a description and analysis of Final Rules that will have a significant economic impact on a substantial number of small entities. This Final Rule concerns a matter of internal agency procedure and it will not have such an impact. An analysis under the RFA is not required.

Information Collection Statement

4. Office of Management and Budget (OMB) regulations require OMB to approve certain information collection requirements imposed by agency rule.[2] This Final Rule contains no new information collections. Therefore, OMB review of this Final Rule is not required.

Environmental Analysis

5. The Commission is required to prepare an Environmental Assessment or an Environmental Impact Statement for any action that may have a significant adverse effect on the human environment. Excluded from this requirement are rules that are procedural, ministerial, or internal administrative and management actions.[3] This rule is procedural in nature and therefore falls within this exception; consequently, no environmental consideration is necessary.

Document Availability

6. In addition to publishing the full text of this document in the **Federal Register**, the Commission provides all interested persons an opportunity to view and/or print the contents of this document via the Internet through the Commission's Home Page (*http://www.ferc.gov*) and in the Commission's Public Reference Room during normal business hours (8:30 a.m. to 5:00 p.m. Eastern time) at 888 First Street NE., Room 2A, Washington, DC 20426.

7. From the Commission's Home Page on the Internet, this information is available in eLibrary. The full text of this document is available on eLibrary in PDF and Microsoft Word format for viewing, printing, and/or downloading. To access this document in eLibrary, type the docket number excluding the last three digits (i.e., the subdocket number—e.g., 000, 001, 002, etc.) in the docket number field.

8. User assistance is available for eLibrary and the Commission's Web site during normal business hours. For assistance, please contact Online Support at 1–866–208–3676 (email at *FERCOnlineSupport@ferc.gov*), or the Public Reference Room at (202) 502–8371, TTY (202) 502–8659 (email at *public.referenceroom@ferc.gov*).

Effective Date and Congressional Notification

9. The provisions of 5 U.S.C. section 801 regarding Congressional review of Final Rules do not apply to this Final Rule because the rule concerns agency procedure and practice and will not substantially affect the rights of non-agency parties.

10. These regulations are effective on April 10, 2013. The Commission finds that notice and public comments are unnecessary because this rule concerns only agency procedure or practice. Therefore the Commission finds good cause to waive the notice period otherwise required before the effective date of a Final Rule.

List of subjects in 18 CFR Part 376

Civil defense, Organization and functions (Government agencies).

By the Commission.

Nathaniel J. Davis, Sr.,

Deputy Secretary.

In consideration of the foregoing, the Commission amends part 376, Chapter I, Title 18, *Code of Federal Regulations,* as follows:

PART 376—ORGANIZATION, MISSION, AND FUNCTIONS; COMMISSION OPERATION DURING EMERGENCY CONDITIONS

■ 1. The authority citation for part 376 continues to read as follows:

Authority: 5 U.S.C. 553; 42 U.S.C. 7101–7352; E.O. 12009, 3 CFR 1978 Comp., p. 142.

■ 2. Section 376.204 is revised to read as follows:

§ 376.204 Delegation of Commission authority during emergency conditions.

(a) *Delegation of authority to one or two Commissioners.* During emergency conditions, the Commission shall

[1] 5 U.S.C. 601–12.

[2] 5 CFR 1320.12.

[3] 18 CFR 380.4(a)(1); *Regulations Implementing the National Environmental Policy Act,* Order No. 486, 52 FR 47897 (Dec. 17, 1987), FERC Stats. & Regs. ¶ 30,783 (1987).

function as usual, if a quorum of the Commission is available and capable of acting. If by reason of such conditions a quorum of the Commission is not available and capable of acting, all functions of the Commission are delegated to the Commissioner or Commissioners who are available and capable of acting.

(b) *Delegation of authority to Commission staff.* (1) When, by reason of emergency conditions, there is no Commissioner available and capable of acting, the functions of the Commission are delegated to the first five members of the Commission staff on the list set forth in paragraph (b)(2) of this section who are available and capable of acting.

(2) The list referred to in paragraph (b)(1) of this section is:

(i) General Counsel;

(ii) Executive Director;

(iii) Director of the Office of Energy Market Regulation;

(iv) Director of the Office of Energy Projects;

(v) Director of the Office of Electric Reliability;

(vi) Director of the Office of Enforcement;

(vii) Deputy General Counsels, in order of seniority;

(viii) Deputy Directors, Office of Energy Market Regulation, in order of seniority;

(ix) Deputy Directors, Office of Energy Projects, in order of seniority;

(x) Deputy Directors, Office of Electric Reliability, in order of seniority;

(xi) Deputy Directors, Office of Enforcement, in order of seniority;

(xii) Associate General Counsels and Solicitor, in order of seniority;

(xiii) In order of seniority, Assistant Directors and Division heads, Office of Energy Market Regulation; Assistant Directors and Division heads, Office of Energy Projects; Assistant Directors and Division heads, Office of Electric Reliability; Deputy Associate General Counsels; Assistant Directors and Division heads, Office of Enforcement;

(xiv) In order of seniority, Regional Engineers and Branch Chiefs of the Office of Energy Projects' regional offices; and Deputy Division Directors and Group Managers of the Office of Electric Reliability's regional offices.

(3) For purposes of paragraph (b)(2)(vii)–(xiv) of this section, order of seniority shall be based on the highest grade and longest period of service in that grade and, furthermore, for purposes of paragraph (b)(2)(xiii)–(xiv) of this section, order of seniority shall be without regard to the particular Office or Division or Branch or Group to which the member of staff is assigned.

(c) *Devolution of authority to Commission staff during emergencies affecting the National Capital Region.* (1) To the extent not otherwise provided by this section, during emergency conditions when the Chairman is not available and capable of acting, when no Commissioner is available and capable of acting, and when no person listed in paragraph (b)(2)(i) through (xiii) of this section who is located in the National Capital Region is available and capable of acting, the functions of the Commission are delegated, in order of seniority (as described in paragraph (b)(3) of this section), to Regional Engineers and Branch Chiefs of the Office of Energy Projects' regional offices and Deputy Division Directors and Group Managers of the Office of Electric Reliability's regional offices.

(2) Such delegation shall continue until such time as the Chairman is available and capable of acting, one or more Commissioners are available and capable of acting, or persons listed in paragraph (b)(2)(i) through (xiii) of this section who are located in the National Capital Region are available and capable of acting.

(d) *Reconsideration of staff action taken under delegations.* Action taken pursuant to the delegations provided for in this section shall be subject to reconsideration by the Commission, acting with a quorum, within thirty days after the date upon which public notice is given that a quorum of the Commission has been reconstituted and is functioning.

[FR Doc. 2013–08341 Filed 4–9–13; 8:45 am]

BILLING CODE 6717–01–P

DEPARTMENT OF COMMERCE

International Trade Administration

19 CFR Part 351

[Docket No. 120618174–3303–01]

RIN 0625–AA91

Definition of Factual Information and Time Limits for Submission of Factual Information

AGENCY: Import Administration, International Trade Administration, Department of Commerce.

ACTION: Final rule.

SUMMARY: The Department of Commerce (the Department) is modifying its regulations, which define ''factual information'' and establish time limits for the submission of factual information in antidumping (AD) and countervailing duty (CVD) proceedings. The modifications to the definition of factual information more clearly describe the types of information that can be submitted by a person or placed on the record by the Department in a segment of the proceeding. The modifications to the time limits enable the Department to efficiently determine the type of information being submitted and whether it is timely filed; they also ensure that the Department has sufficient opportunity to review submissions of factual information.

DATES: *Effective date:* May 10, 2013. *Applicability date:* This rule will apply to all segments initiated on or after this date.

FOR FURTHER INFORMATION CONTACT: Joanna Theiss at (202) 482–5052 or Charles Vannatta at (202) 482–4036.

SUPPLEMENTARY INFORMATION:

Background

On July 10, 2012, the Department published a proposed modification of its regulations regarding the definition of factual information and time limits for submission of factual information. *See Modification of Regulations Regarding the Definition of Factual Information and Time Limits for Submission of Factual Information,* 77 FR 40534 (July 10, 2012) (*Proposed Rule*). The *Proposed Rule* explained the Department's proposal to modify two of its regulations, to allow for a more accurate classification of factual information, and to establish time limits for the submission of factual information, which are based on the type of factual information that is being submitted. The Department received numerous comments on the *Proposed Rule* and has addressed those comments below. The *Proposed Rule,* comments received, and this final rule can be accessed using the Federal eRulemaking portal at *http://www.Regulations.gov* under Docket Number ITA–2012–0004. After analyzing and carefully considering all of the comments that the Department received in response to the *Proposed Rule,* the Department has adopted the modification, with certain changes, and amended its regulations accordingly.

Explanation of Regulatory Provision and Final Modification

The Department is modifying two regulations related to AD and CVD proceedings: the definition of factual information (19 CFR 351.102(b)(21)), and the time limits for the submission of factual information (19 CFR 351.301). Prior to this modification, 19 CFR 351.102(b)(21) defined factual information as: ''(i) initial and supplemental questionnaire responses; (ii) data or statements of fact in support

of allegations; (iii) other data or statements of facts; and (iv) documentary evidence.'' The Department is modifying this definition in order to create distinct descriptive categories of factual information that can be submitted in a segment of a proceeding.

The final rule identifies five categories of factual information, which are summarized as follows: (i) Evidence submitted in response to questionnaires; (ii) evidence submitted in support of allegations; (iii) publicly available information to value factors under 19 CFR 351.408(c) or to measure the adequacy of remuneration under 19 CFR 351.511(a)(2); (iv) evidence placed on the record by the Department; and (v) evidence other than factual information described in (i)–(iv). The definition does not change the types of information that can be submitted in a segment of a proceeding; rather, it allows for more accurate classification of factual information.

Prior to this modification, 19 CFR 351.301 set forth the time limits for submission of factual information, including general time limits, time limits for certain submissions such as responses to questionnaires, and time limits for certain allegations. The Department is modifying 19 CFR 351.301 so that, rather than providing general time limits, there are specific time limits based on the type of factual information being submitted, in accordance with the modification to 19 CFR 351.102(b)(21). The modification enables the Department to review and analyze the factual information at the appropriate stage in the proceeding, based on the Department's experience in administering the AD and CVD laws, rather than being required to review large amounts of factual information on the record of a proceeding when it is too late to adequately examine, analyze, conduct follow-up inquiries regarding and, if necessary, verify the information. This modification provides clarity to persons concerning the deadlines for submissions of certain factual information in a segment of a proceeding, including the submission of factual information to rebut, clarify, or correct factual information that is already on the record.

The final rule requires any person, when submitting factual information, to specify under which subsection of 19 CFR 351.102(b)(21) the information is being submitted and, if the information is submitted to rebut, clarify, or correct factual information already on the record, to provide an explanation identifying the information already on the record that the factual information seeks to rebut, clarify, or correct. This enables the Department and interested parties to efficiently identify the factual information and to analyze it in accordance with the purpose for which it is being submitted.

Response to Comments on the Proposed Rule

The Department received numerous comments on its *Proposed Rule.* Below is a summary of the comments, grouped by issue category, followed by the Department's response.

1. Time Limits Based on the Type of Factual Information Being Submitted

Many commenters argue that the Department should maintain general time limits and should not base time limits on the type of factual information being submitted, arguing that there is no evidence that the time limits in the prior rule prevented the Department from sufficiently analyzing factual information; that the time limits in the final rule are arbitrary and abrogate the Department's responsibility to calculate accurate dumping margins; and that it is the Department that is responsible for the extent to which factual information in a segment is lacking, due to, for instance, the Department's habit of extending time limits for the preliminary results and delays in selecting respondents. One commenter suggests that there is more than sufficient time after the preliminary determination or preliminary results for the Department to make its determinations without changing the time limits.

Response: The Department has not adopted this proposal in its final rule. The commenters' views are contrary to the Department's experience in administering the AD and CVD laws. The Department continues to believe that time limits based on the type of factual information being submitted will result in increased certainty and more effective administration of the AD and CVD laws. The Department never intended a general factual information time limit to permit the submission of factual information for which a specific time limit was applicable (*e.g.,* submission of information responsive to a questionnaire). Because parties have used the general time limit as a means of submitting factual information that should have been submitted at an earlier stage in the proceeding, the Department often received factual information when there was insufficient time for adequate comment, rebuttal, verification, and analysis. In addition, the general time limits often resulted in large volumes of factual information being placed on the administrative record at such a late stage of a proceeding that parties did not have the opportunity to see how the Department used the information in its calculations until the final determination or final results.

Further, although the commenters may perceive that the Department has adequate opportunity to consider factual information in an investigation or a review, this is a misperception of the operational procedures required to complete an investigation or review. For instance, Department officials must make certain internal decisions much earlier than the due date of the preliminary determination or preliminary results, in order to issue questionnaires, supplemental questionnaires, consider all allegations, determine whether critical factual information is missing from the record, conduct a complete and thorough analysis of all the factual information on the record as well as making a myriad of individual decisions with respect to the treatment of each of the facts on the record in relation to applicable regulatory, statutory, and case and legal precedent.

Under the prior rule, the Department often could not fully analyze an issue because parties could submit factual information on that issue long after the issue became ripe for analysis. Given the necessity of allocating Department resources as efficiently as possible, the Department must complete the record for an issue when that issue arises, so that the parties and the Department are presented with all of the record facts to present their arguments and to analyze those arguments in light of the record facts, respectively. As the Department stated in response to a party's argument that the Department should not have rejected factual information to value factors after the time limit for such submissions had passed, ''because the submission of wholly new [surrogate value] information can generate the submission of yet more 'rebuttal' information, it has the potential to seriously erode the finality of the record necessary for interested parties to make complete assessments of the record for purposes of the submission of complete briefs.'' *Polyethylene Terephthalate Film, Sheet, and Strip From the People's Republic of China: Final Results of the 2009–2010 Antidumping Duty Administrative Review of the Antidumping Duty Order,* 77 FR 14493 (March 12, 2012) and accompanying Issues and Decision Memorandum at Issue 3. In other words, both the parties and the Department have an interest in finalizing the record at a stage in the segment of the proceeding when there is

adequate opportunity to sufficiently analyze the record facts.

If parties find that the administrative record is lacking factual information, the parties should explain what additional information they wish to submit, explain why it was not available for timely submission, and request that the Department accept the information. If there is adequate time for rebuttal, comment, analysis, and thorough consideration of the new, previously unavailable information and the Department could potentially verify this information, then the Department may elect to permit submission. Otherwise, the reliability of such late-submitted information cannot be assured.

2. Time Limits for the Submission of Factual Information to Value Factors Under 19 CFR 351.408(c)

Several commenters argue that the time limits for the submission of factual information to value factors pursuant to 19 CFR 351.408(c) should not occur before the preliminary determination in an investigation, and preliminary results in an administrative review, because the selection of surrogate values has a significant impact on dumping margins in non-market economy cases, and establishing a time limit before the preliminary determination or preliminary results will result in either a deluge of factual information based on the parties' guesses as to what the case may require, or a lack of quality factual information. Several commenters argue that the Department has created uncertainty concerning the time limit for the submission of factual information to value factors because the time limit is based on the scheduled date of the preliminary determination or preliminary results, which can be extended by the Department. One commenter suggests that there be a separate rulemaking to address issues concerning the submission of factual information to value factors; that the burden be on domestic interested parties to make the initial suggestion of a surrogate country and factual information to value factors; that the Department explain why it was not using certain factual information in the preliminary determination or preliminary results; and that the Department should notify parties of ''deficiencies'' with their factual information to value factors, akin to the requirements of section 782(d) of the Tariff Act of 1930 as amended (the Act). One commenter questions why the Department focused on small entities in the *Proposed Rule,* arguing that the negative effect will be the same for entities regardless of size.

Response: We have not adopted these proposals. We agree that factual information to value factors under 19 CFR 351.408(c) is important in non-market economy cases, and consider that a time limit for the submission of this information before the preliminary determination or preliminary results will increase certainty to parties and result in better quality comments on the information. We note that parties are permitted to file multiple submissions of factual information to value factors. If the Department extends the date of the preliminary determination or preliminary results, parties may submit additional factual information to value factors any time before the new deadline, even if they have already filed a submission based on the original deadline.

Under the prior rule, the Department routinely received submissions of factual information to value factors after the preliminary determination or preliminary results, and the Department may have used that information in the final determination without an opportunity for interested parties to review or comment upon the calculations incorporating such information. By requiring parties to submit this information before the preliminary determination or preliminary results, all parties will have the benefit of knowing all record information and what factual information the Department preliminarily relied upon, in order to more effectively comment upon the Department's selections. The purpose of this rulemaking is to improve 19 CFR 351.301 so that the Department may review and analyze factual information at the appropriate stage in the proceeding, rather than be required to review large amounts of information when it is too late to adequately conduct its analysis. Whether or not the Department will undertake additional rulemakings on separate, albeit related, matters is beyond the scope of this rulemaking. Concerning the comment that the domestic interested parties should be required to make the initial suggestion of a surrogate country and factual information to value factors, it is to all parties' advantage to submit surrogate country and corresponding factual information to value factors early in the proceeding. We also note that all interested parties may submit factual information to rebut, clarify, or correct factual information to value factors, as long as that information is submitted solely for rebuttal and not for purposes of establishing new surrogate values. *See* 19 CFR 351.301(c)(3)(iv). Concerning the comment that the Department should point out ''deficiencies'' in factual information to value factors and permit parties the opportunity to correct these deficiencies, we have not adopted this proposal. The Act provides that the Department shall value factors of production using ''the best available information,'' and the Department weighs many factors to determine what constitutes the best available information. *See* section 773(c)(1) of the Act. Information that is not selected is not necessarily deficient; it is simply not the best available information. Parties are not required to submit surrogate factual information to value factors, nor does the Department apply adverse inferences where a party does not submit surrogate factual information to value factors. We also note that the Department's discussion of the impact of the proposed rule on small entities was completed as part of its Initial Regulatory Flexibility Analysis, which is required by statute.

3. Time Limit for the Submission of Factual Information To Rebut, Clarify, or Correct Questionnaire Responses

Several commenters oppose elimination of the general time limit for the submission of factual information to rebut, clarify, or correct questionnaire responses, and argue that the *Proposed Rule* does not provide sufficient time because it is time consuming to develop factual information for purposes of rebuttal, clarification, or correction, as parties must work with their clients using public versions of responses, and it often involves time-consuming market research. Some commenters argue that the time limit for the submission of factual information to rebut, clarify, or correct questionnaire responses should be extended to at least 30 days. Significant facts may become apparent only in later submissions, by which point the time limit may be passed. If the Department does not ask questions relevant to an issue in supplemental questionnaires, then the parties are prevented from submitting rebuttal factual information. The incentive will be for parties to submit voluminous rebuttal information early on, in case it becomes relevant later. The commenters argue that the Department's certification requirements under 19 CFR 351.303(g) require additional time for the preparation of the submission of rebuttal factual information.

Response: The Department has not adopted these proposals. We find that the rebuttal time limit provides sufficient time to develop rebuttal factual information, and the

development of a complete record early in the proceeding is an advantage, not a disadvantage. The early stages of a segment of a proceeding should be used to develop a complete record on most issues and identify those issues where the record needs to be further developed. Later submissions afford opportunities to rebut those submissions. Parties are expected to consider how much time is required to comply with the Department's regulations as they prepare their submissions. The holding of relevant information until later stages of a segment of a proceeding to see whether submission of the information is advantageous to a party's interests is not a proper incentive to maintain general time limits from the Department's perspective. The Department can request information at any time from any party, and parties can argue at any point that the record is deficient on a particular issue and urge the Department to request or gather additional information. Further, parties can request an extension of a time limit pursuant to 19 CFR 351.302.

4. Opportunity for Surrebuttal

Several commenters argue that the Department should allow interested parties an additional opportunity to submit factual information to rebut, clarify, or correct another interested party's rebuttal factual information (surrebuttal), arguing that: the volume of factual information on the record will greatly increase because parties must anticipate all potential challenges that may arise in another party's submission of rebuttal factual information; and by providing the opportunity of surrebuttal only to respondents, the respondents will be incentivized to submit incomplete data in their responses to questionnaires. Another commenter argues that respondents should have the ''final'' right of rebuttal of factual information, because respondents must respond to allegations of dumping in AD proceedings.

Response: We have not adopted either proposal. Section 351.301(c)(1)(v) of the Department's regulations, which permits the original submitter of a questionnaire response to submit factual information to rebut, clarify, or correct factual information submitted in another party's rebuttal, clarification, or correction factual information, is consistent with the Department's current practice. Currently and under the final rule, if a respondent submits incomplete factual information in its questionnaire response, the Department generally issues a supplemental questionnaire requesting that the respondent correct all deficiencies, noting the possible consequences of incomplete submissions, pursuant to section 776 of the Act. We also note that, in the final rule, parties retain the ability to submit factual information to rebut, clarify, or correct a respondent's factual information submitted in response to a supplemental questionnaire. *See* 19 CFR 351.301(c)(1)(v). Further, the final rule does not limit the parties' ability to argue that the record is deficient on a particular issue and to urge the Department to request and/or collect additional factual information as to that issue.

Concerning one commenter's argument that respondents should have the ''final'' right of rebuttal of factual information, the Department has not adopted this proposal. As discussed above, the original submitter of a questionnaire response may submit surrebuttal factual information. Further, it is unclear how this proposal would operate where the respondent is not the original submitter of factual information, because the respondent has the opportunity to submit factual information to rebut, clarify, or correct factual information on the record under the final rule. To the extent that the commenter is arguing that a respondent would be able to submit factual information after other interested parties in all instances, this proposal has not been adopted because the Department has eliminated the general time limits for the submission of factual information.

5. Definition of Factual Information

One commenter argues that, in revising 19 CFR 351.102(b)(21), the Department is substituting the term evidence for ''data or statements'' without defining evidence, and that it is not clear what the Department intends by 19 CFR 351.102(b)(21)(v) (''evidence, including statements of fact, documents, and data, other than factual information described in (i)–(iv) of this section'').

Response: As the commenter acknowledges, by revising 19 CFR 351.102(b)(21), the Department is not changing the types of information that can be submitted. Rather, the definition of factual information allows for the more accurate classification of factual information using consistent terminology. The subsections of 19 CFR 351.102(b)(21) define evidence to include statements of fact, documents, and data. Section 351.102(b)(21)(v) of the Department's regulations is intended to include factual information that is not captured by subsections (i) through (iv). However, it is unlikely that parties will submit information under this subsection, because nearly all factual information submitted in a segment of an AD or CVD proceeding will fall into subsections (i) through (iv) of 19 CFR 351.102(b)(21). The Department does not intend for this subsection to be used as a ''catch-all'' category. Accordingly, if a party indicates that its factual information falls under this subsection, that party ''must explain why the information does not satisfy the definitions described in § 351.102(b)(21)(i)–(iv).'' *See* 19 CFR 351.301(b)(1).

6. Time Limits for the Allegation of New Subsidies

One commenter stated that the time limits for the submission of allegations of new subsidies in the *Proposed Rule* do not take into account instances in which a respondent submits factual information after the time limits for new subsidy allegations (40 days before the preliminary determination in an investigation and 20 days after all responses to an initial questionnaire have been filed in an administrative review). The commenter argues that the Department should modify the time limits to allow domestic interested parties to allege new subsidies in an investigation or review within 15 days after receipt of factual information provided by a respondent.

Response: The Department has not adopted this proposal. The final rule maintains the same time limits as before the modification because the Department has found that these time limits have been efficiently applied in CVD proceedings for many years. We note that both 19 CFR 351.301(c)(2)(iv)(A) and (B) specify that the Department may extend or alter the time limits for new subsidy allegations in an investigation or administrative review, respectively, and parties may request extensions to these time limits pursuant to 19 CFR 351.302. We also note that the Department routinely grants extensions for the filing of new subsidy allegations in CVD proceedings.

7. Factual Information Submitted in Prior Segments

Several commenters suggest that the Department incorporate the administrative record from prior segments of a proceeding into the record of an ongoing segment. The comments range from suggesting incorporation of the records of the two immediately preceding segments to the records from all preceding segments. The commenters argue that this would enable all parties to benefit from the information developed in prior

segments, the importance of which may not be recognized until well after the time limits for the submission of factual information in the ongoing segment. The commenters also argue that this practice would reduce the amount of factual information which would have to be submitted by parties in each segment of a proceeding and would allow the Department to rely on the information from preceding segments.

Response: The Department has not adopted this proposal. Including the administrative records from some or all preceding segments of a proceeding would unnecessarily increase the volume of information on the record of the ongoing segment and would be burdensome for the Department to analyze. Further, the administrative record of a given segment is intended to reflect the specific facts for the period under review, and automatically transferring information from previous periods would be likely to introduce irrelevant factual information that may also be inaccurate, unsupported, or have changed in the period under review. If an interested party finds that factual information from a preceding segment is relevant to the ongoing segment, then the party may submit such factual information on the record of the ongoing segment, subject to certain limitations. *See* 19 CFR 351.306(b). If the time limit for the submission of that type of factual information has passed, then the party may request that the Department accept the factual information.

8. The Department's Placement of Factual Information on the Record

One commenter argues that the Department is imposing discipline on interested parties that may be prone to exploit ambiguities in the time limits for the submission of factual information, but is reserving for itself the discretion to place factual information on the record at any time, and to set the time limits for the submission of factual information to rebut, clarify, or correct that information. This commenter proposes that the regulation provide that the Department may place factual information on the record of the proceeding only up to 14 days before the time limit set forth in 19 CFR 351.301(c)(5).

Response: The Department has not adopted this proposal. Although ''the burden of creating an adequate record lies with respondents and not with Commerce,'' *Longkou Maimeng Mach. Co.* v. *United States,* 617 F. Supp. 2d 1363, 1372 (CIT 2009), the Department finds that adopting such a proposal would abrogate its responsibility as the administering authority of the AD and CVD laws. The Department is legally required to render administrative determinations under the Act on the basis of the record developed in and for the segment under consideration. Given the time constraints imposed by the Act, at any point in the proceeding when the Department finds that the administrative record is lacking factual information, the Department may appropriately place factual information on the record to ensure that its determination is supported by substantial evidence. To this end, and to ensure transparency and active and meaningful participation by parties, 19 CFR 351.301(c)(4) states that when the Department places factual information on the record, all interested parties are provided with an opportunity to submit factual information to rebut, clarify, or correct that factual information. We also note that the Department's practice permits it to place factual information on the record of a segment, and in such situations, it regularly provides interested parties with the opportunity to submit factual information to rebut, clarify, or correct that information; the final rule merely codifies this practice in the regulation.

9. Service Requirements

One commenter argues that the Department should require that surrogate value submissions, apart from the petition, be served by hand by all interested parties within the business day that they are due (or by express mail for all parties not located in Washington, DC). Another commenter suggests that the proposed deadlines create difficulties arising from the service methods given that, pursuant to 19 CFR 351.303(f)(i), either personal service or service via first class mail can be chosen. This commenter is concerned that a respondent could choose service by mail for the purpose of limiting the rebuttal time for domestic interested parties. This commenter suggests that the time period for rebuttal should be triggered by the actual receipt of the submission by an interested party. In the alternative, this commenter suggests that the Department adopt an interim rule to clarify when the time period for rebuttal begins until implementation of Phase III of IA Access.

Response: The Department has not adopted this proposal. The Department is not modifying 19 CFR 351.303(f)(i) at this time. Any changes in service requirements must be made through 19 CFR 351.303(f)(i), not based on the implementation of phases of IA Access. We also note that although Phase III of IA Access will not address service requirements, it should give parties earlier access to submissions with business proprietary information. This change should mitigate the concern over delayed access resulting from service by mail. Further, to the extent that parties require an extension due to service delays, an extension request, citing this circumstance, may be filed pursuant to 19 CFR 351.302.

10. Verification Exhibits

One commenter suggests that the Department clarify whether verification exhibits will be considered evidence placed on the record by the Department, as defined by proposed 19 CFR 351.102(b)(21)(iv), or evidence placed on the record by the interested party which was verified, as defined by 19 CFR 351.102(b)(21)(i), so that parties may know the time limit for providing rebuttal factual information. The commenter argues that the Department should address late or incomplete service of verification exhibits, bracketing inconsistencies and failure to translate exhibits, and should clarify that the interested party which was verified may not later attempt to cure deficiencies in verification through the submission of a surrebuttal to the verification exhibits.

Response: We have not adopted this suggestion because documents that are retained by the Department and designated as verification exhibits in the verification report serve only to support statements in the respondents' questionnaire responses and the Department's verification report; therefore, parties may not submit factual information to rebut, clarify, or correct verification exhibits and verification reports. This is consistent with *Antidumping Duties; Countervailing Duties,* 62 FR 27296, 27332 (May 19, 1997), in which the Department declined to adopt a proposal that would permit interested parties to submit factual information to rebut, clarify, or correct factual information in the Department's verification report because ''the Department is unable to verify post-verification submissions of new factual information.'' Under the final rule, parties are free to comment on the results of verification in case briefs filed pursuant to 19 CFR 351.309, drawing on factual information already on the record. The Department has not adopted the commenter's suggestion that we address late or incomplete service of verification exhibits because, under Department practice, parties are required to serve verification exhibits as soon as possible after verification. *See Antidumping Duties; Countervailing Duties,* 62 FR at 27338. Further, should

a party encounter difficulties such that the party requires additional time to submit its case brief, it may request an extension to that time limit pursuant to 19 CFR 351.302.

11. Clarifying That the Final Rule Does Not Apply to Argument

One commenter notes that the Department's proposed 19 CFR 351.301(c)(3)(iv) indicates that parties have one opportunity to submit arguments to rebut, clarify, or correct factual information pursuant to 19 CFR 351.408(c) or 19 CFR 351.511(a)(2), and that arguments, normally governed by 19 CFR 351.309, should not be thus restricted.

Response: We agree with the commenter and have adopted this proposal. Section 351.301 of the Department's regulations governs the submission of factual information, not argument, and thus have removed the word ''arguments'' from 19 CFR 351.301(c)(3)(iv) in the final rule.

12. Consideration of Holidays

One commenter suggests that whenever a public holiday in the United States or relevant foreign country falls within the time limit for a response, the Department should be required to extend the time limit by the number of days of the intervening holiday, because time limits are unrealistic if they fail to account for the fact that personnel are unavailable on holidays.

Response: The suggestion is unworkable because the time limits within which the Department must work do not expand by the number of holidays that occur during the segment. The Department understands that it is occasionally necessary to extend time limits on a case-by-case basis, and has provided procedures for parties to request such extensions when necessary. *See* 19 CFR 351.302.

13. Purpose and Effect of 19 CFR 351.301(b)

Several commenters inquire as to the purpose and legal effect of failing to comply with the requirement in 19 CFR 351.301(b) that every submission of factual information be accompanied by a written explanation identifying the subsection of 19 CFR 351.102(b)(21) under which the information is being submitted, and argue that it may be difficult for parties to comply with this requirement because company representatives will not have access to another party's business proprietary information (BPI), and so would not be able to certify what specific information is being rebutted, all of which could result in delays for the Department. Another commenter argues that, when submitting factual information, parties should explain how it is relevant in the segment of the proceeding.

Response: Section 351.301(b) of the Department's regulations requires parties submitting factual information to indicate what type of information is being submitted, so that the Department may efficiently and quickly identify the factual information and analyze it in accordance with the purpose for which it is being submitted. Regarding the commenter's proposal that a party submitting factual information explain why it is relevant to the segment, we find that the requirement that the factual information be identified by type of information will enable the Department and other interested parties to determine the purpose for which the information is being submitted. Concerning the legal effect of failing to identify the type of information that is being submitted, the Department may reject the party's submission of factual information. We disagree that 19 CFR 351.301(b) will be unduly burdensome or complicate participation in segments of proceedings, because a party submitting factual information should know what type of factual information it is submitting, and 19 CFR 351.301(b) simply requires that the party identify the information by type. We do not find that a company representative's lack of access to another party's BPI will complicate compliance with19 CFR 351.301(b)(2). The final rule does not require that counsel reveal protected information, but rather that the party identify the information by the interested party that submitted it, and the date on which it was submitted, with as much specificity as possible. The final rule does not impose any additional certification requirements because currently the company representative will certify rebuttal, correction, or clarification factual information without having access to BPI.

14. Adequate Time To Respond to Sections of an AD Questionnaire

One commenter suggests that the Department should modify 19 CFR 351.301(c)(1)(i) to indicate that a submitter will have ''adequate'' time to respond to individual sections of an initial questionnaire, if the time limit is less than the 30 days allotted for response to the full questionnaire. Another commenter argues that the final rule should specify a time limit for supplemental questionnaire responses, rather than a ''date specified by the Department.''

Response: The Department has not incorporated these proposals into the final rule because the Department will continue to provide adequate time to respond to individual sections of an initial questionnaire, as under the prior rule. To the extent that an interested party requires additional time to complete individual sections of an initial questionnaire, it should request an extension of the time limit pursuant to 19 CFR 351.302. We have not adopted the proposal concerning the establishment of specific time limits for supplemental questionnaire responses, because the length and complexity of supplemental questionnaires—and the time available for providing a usable response—vary considerably, depending on the nature and extent of the deficiencies.

15. Time Limit for Initial Questionnaire Responses

One commenter argues that the *Proposed Rule* underestimates the difficulties in compiling initial questionnaire responses, and so the Department should provide longer than 30 days to submit initial questionnaire responses, and permit extensions and the opportunity to submit corrections and clarifications to their own submissions.

Response: The Department has not extended the time period for the submission of initial questionnaire responses. As under the prior regulation, interested parties are permitted 30 days to submit initial questionnaire responses and, contrary to the commenter's assumption, the final rule does not limit a party's ability to request an extension of this time limit under 19 CFR 351.302.

16. Factual Information Concerning Allegations

One commenter argues that the Department failed to provide an opportunity for parties to rebut, clarify, or correct various allegations such as market viability, sales below cost, or targeted dumping, and inadvertently left out a provision concerning the submission of factual information in support of allegations concerning targeted dumping.

Response: The *Proposed Rule* provides interested parties the opportunity to submit factual information to rebut, clarify or correct factual information submitted in support of allegations, and this remains unchanged in the final rule. *See* 19 CFR 351.301(c)(2)(vi). In addition, the *Proposed Rule* permits parties to submit factual information in support of ''other allegations,'' and this also remains

unchanged in the final rule. *See* 19 CFR 351.301(c)(2)(v).

17. Limit Supplemental Questionnaires and Extensions for Supplemental Questionnaire Responses

Two commenters argue that the Department's regulation should specify that the initial questionnaire response should be complete and include all requested materials, and one commenter suggests that the final rule should specify that, in general, the Department will issue only one supplemental questionnaire designed to meet the requirements of section 782(d) of the Act. Another commenter argues that the final rule should indicate that the Department will provide fewer and shorter extensions for the submission of initial and supplemental questionnaire responses.

Response: We have not adopted these proposals. First, under Department practice interested parties are expected to respond in full to the Department's questionnaires. Second, we do not find that regulating, even as a general matter, the number of supplemental questionnaires that will be issued will improve the administration of AD and CVD proceedings, because each segment presents different circumstances. We note that, pursuant to section 776 of the Act, the Department will continue to resort to the application of facts available should an interested party fail to provide necessary information. Third, the Department will continue to grant extensions of time limits to the extent that they are warranted and deadlines for the segment permit. *See* 19 CFR 351.302; *see also Modification of Regulation Regarding the Extension of Time Limits,* 78 FR 3367 (January 16, 2013).

18. Restrict Reporting Methods

One commenter argues that, where a respondent participating in an ongoing segment has participated in a preceding segment, the Department should require the respondent to report its factual information using the same method that the Department previously accepted. If the respondent wishes to report the information differently, this reporting will be provided only in addition to the reporting in the previous manner.

Response: We have not incorporated this proposal into the final rule because it relies on a specific circumstance in which a respondent has participated in a prior segment and also assumes that the previously accepted reporting method is still relevant to the facts of the ongoing segment. It also could amount to increasing unnecessarily the reporting burden on the respondent where, for instance, facts have changed in the period under review such that the previously accepted reporting method has been rendered obsolete.

19. Enforce 19 CFR 351.304(c)

One commenter urges the Department to increase the rigor of enforcement of 19 CFR 351.304(c), which requires parties to provide a public version of BPI.

Response: The Department appreciates the importance of consistent enforcement of the requirements in 19 CFR 351.304(c), but notes that we are not modifying 19 CFR 351.304(c) in this rulemaking.

Changes From the Proposed Rule

In the final rule, the Department has removed the word ''arguments'' from section 351.301(c)(3)(iv).

Classification

Executive Order 12866

This rule has been determined to be not significant for purposes of Executive Order 12866.

Final Regulatory Flexibility Analysis

The Department has prepared the following Final Regulatory Flexibility Analysis.

1. A Statement of the Need for, and Objectives of, the Rule

This final rule is intended to alter the Import Administration's regulations for AD and CVD proceedings; specifically, to change the definition of factual information and the deadlines for submitting information in AD and CVD proceedings.

The final rule would alter several deadlines for submitting factual information in a segment of a proceeding. Information submitted to rebut, clarify, or correct factual information generally has a deadline of 10 days from the date that the initial factual information is served on the interested party or filed with the Department, except for factual information submitted to rebut, clarify, or correct information in an initial questionnaire response, which is due 14 days after the initial response is filed with the Department. Factual information voluntarily provided to support allegations regarding market viability and the basis for determining normal value is due 10 days after the respondent interested party files the response to the relevant section of the questionnaire. Factual information provided to support an allegation of an upstream subsidy is due no later than 60 days after the preliminary determination.

Deadlines for submissions of factual information to value factors of production and to measure the adequacy of remuneration have been codified or shortened, as appropriate, but this is expected to have a beneficial impact on small entities that participate in AD and CVD proceedings because they will have the opportunity to review and comment on the Department's preliminary analysis of the information, which is not the case under the prior rule.

2. A Statement of Significant Issues Raised by the Public Comments in Response to the Initial Regulatory Flexibility Analysis, a Statement of the Assessment of the Agency of Such Issues, and a Statement of Any Changes in the Proposed Rule as a Result of Such Comments.

The Department received no comments concerning the Initial Regulatory Flexibility Analysis.

3. The Response of the Agency to Any Comments Filed by the Chief Counsel for Advocacy of the Small Business Administration in Response to the Proposed Rule, and a Detailed Statement of Any Change Made to the Proposed Rule in the Final Rule as a Result of the Comments

The Department received no comments from the Chief Counsel for Advocacy of the Small Business Administration.

4. A Description of and an Estimate of the Number of Small Entities To Which the Rule Will Apply or an Explanation of Why No Such Estimate Is Available

The final rule will apply to all persons submitting information to the Department in AD and CVD proceedings. This could include exporters and producers of merchandise subject to AD and CVD proceedings and their affiliates, importers of such merchandise, domestic producers of like products, and foreign governments.

Exporters and producers of subject merchandise are rarely U.S. companies. Some producers and exporters of subject merchandise do have U.S. affiliates, some of which may be considered small entities under the appropriate Small Business Administration (SBA) small business size standard. The Department is not able to estimate the number of U.S. affiliates of foreign exporters and producers that may be considered small entities, but anticipates, based on its experience in these proceedings, that the number will not be substantial.

Importers may be U.S. or foreign companies, and some of these entities may be considered small entities under

the appropriate SBA small business size standard. The Department does not anticipate that the final rule will impact a substantial number of small importers because importers of subject merchandise who are not also producers and exporters (or their affiliates) rarely submit factual information in the course of the Department's AD and CVD proceedings, and those that do tend to be larger entities.

Some domestic producers of like products may be considered small entities under the appropriate SBA small business size standard. Although it is unable to estimate the number of producers that may be considered small entities, the Department does not anticipate that the number affected by the final rule will be substantial. Frequently, domestic producers that bring a petition account for a large amount of the domestic production within an industry, so it is unlikely that these domestic producers will be small entities.

In sum, while recognizing that exporter and producer affiliates, importers, and domestic producers that submit information in AD and CVD proceedings will likely include some small entities, the Department, based on its experience with these proceedings and the participating parties, does not anticipate that the final rule would impact a substantial number of small entities.

5. A Description of the Projected Reporting, Recordkeeping, and Other Compliance Requirements of the Final Rule

The final rule will require persons submitting factual information to the Department to specify under which subsection of the final definition the information is being submitted. If it is being submitted to rebut, clarify, or correct factual information already on the record, the person will be required to identify the information already on the record that the factual information seeks to rebut, clarify, or correct. This will not amount to a significant burden as the submitter should already be aware of the relevant subsection pursuant to which it is submitting factual information; in addition, all of the required information should be readily available to any person submitting factual information to the Department.

6. A Description of the Steps the Agency Has Taken To Minimize the Significant Economic Impact on Small Entities Consistent With the Stated Objectives of Applicable Statutes, Including a Statement of the Factual, Policy, and Legal Reasons for Selecting the Alternative Adopted in the Final Rule and Why Each of the Other Significant Alternatives to the Rule Considered by the Agency Which Affect the Impact on Small Entities Was Rejected

The Department has taken steps to minimize the significant economic impact on small entities. As discussed above, all parties may request an extension pursuant to section 351.302, and the Department will continue to grant extensions of time limits to the extent that they are warranted and deadlines for the segment permit. Further, the Department considered significant alternatives to the final rule. The alternatives are:

(1) Modifying the definition of factual information and modifying the time limits as described in the final rule (the Department's preferred alternative);

(2) Maintaining the status quo definition of factual information and the time limits for the submission of factual information;

(3) Modifying the definition of factual information but maintaining all time limits; and

(4) Modifying the definition of factual information and extending the time limits.

First, the Department does not anticipate that the first, preferred alternative will have a significant economic impact on small entities. The changes to the definition of ''factual information'' do not impose any significant burden on the parties in AD or CVD proceedings; the changes do not alter the types of information that may be submitted, but merely re-categorize them into more logical groupings than the current definition. The changes to the deadlines for submitting factual information are also not expected to have a significant economic impact on small entities. Although some deadlines are shortened, these are either not expected to have a significant impact on small entities or will actually have a positive impact. For example, for the submission of factual information in support of allegations, or to rebut, clarify, or correct factual information, in the Department's experience the parties submitting these allegations or rebuttals/clarifications/corrections will possess the relevant information with sufficient time to submit them before the information would be due.

By contrast, shortening the time limits for the submission of factual information to value factors of production will have a beneficial impact on any small entities that are participating in an AD proceeding, because it will provide them with an opportunity to review and comment on the Department's preliminary analysis of this information. Because the time limits currently permit such information to be submitted after the Department issues its preliminary calculations, parties wishing to assess the significance of this information would need to undertake their own analysis of the often voluminous information submitted. Such analysis of the often voluminous information may be particularly burdensome for small entities. In addition, parties continue to have a significant amount of time to gather this type of information in advance of the time limit because the Department accepts only publicly available information pursuant to this provision. Further, establishing a time limit for the submission of factual information to measure the adequacy of remuneration under § 351.511(a)(2), where the current regulation does not include any time limit, will provide certainty to parties, including those who wish to submit factual information to rebut, clarify or correct the factual information submitted under this provision.

Under alternative two, the Department determined that maintaining the definition of factual information and the time limits provision would not serve the objective of the proposed rules to permit the Department and interested parties adequate opportunity to review and analyze submissions of factual information in an efficient manner. If the Department were to maintain the current rules, then persons would still be able to submit large amounts of factual information on the record of an AD or CVD segment very close to the Department's statutory deadlines for making certain determinations, thus limiting the Department's ability to consider, analyze and, if applicable, verify the information submitted. The current definition and time limits also do not provide sufficient clarity to persons participating in an AD or CVD proceeding, because the current rules do not require persons submitting information to identify the type of information which is being submitted. Although this alternative was considered, it was not adopted because it does not serve the Department's objectives of creating certainty for

participants in AD and CVD proceedings.

The Department also considered modifying the definition of factual information without modifying the time limits provision, listed as alternative three. This alternative would serve the objective of the proposed rules to identify more clearly the types of factual information which are submitted in AD and CVD proceedings, but does not serve the goal of enabling the Department to efficiently examine factual information at an appropriate stage in the proceeding. For instance, the Department determined that continuing to allow factual information in an AD or CVD investigation ''seven days before the date on which verification of any person is scheduled to commence,'' 19 CFR 351.301(b)(1), would run counter to the objectives of the proposed rules because the Department often does not have sufficient opportunity to review adequately submissions of factual information when they are submitted at this stage of the proceeding. In addition, maintaining the time limits for, for instance, the submission of factual information to value factors could deprive persons of the opportunity to comment on the Department's preliminary analysis of these submissions in their case briefs. The changes to the definition to more clearly describe the types of factual information which is submitted in an AD and CVD proceeding, without a corresponding modification to the time limits provision, would not serve the objectives of the Department and, thus, has not been adopted.

Finally, as alternative four, the Department considered extending the time limits for the submission of factual information, but this alternative has not been adopted. The Department is required to make certain determinations for AD and CVD proceedings within prescribed statutory deadlines. The prior rule sometimes did not provide the Department with a sufficient opportunity to examine and analyze submissions of factual information before those statutory deadlines, and in some instances deprived parties of the opportunity to comment on the submissions of factual information in their case briefs. An extension of time limits would exacerbate the problem, which the proposed rules seek to address. Therefore, this alternative has not been adopted.

Small Business Compliance Guide

In accordance with Section 212 of the Small Business Regulatory Enforcement Fairness Act of 1996, the agency has published a guide to assist small entities in complying with the rule.

Paperwork Reduction Act

This final rule does not require a collection of information for purposes of the Paperwork Reduction Act of 1980, as amended (44 U.S.C. 3501 *et seq.*).

List of Subjects in 19 CFR Part 351

Administrative practice and procedure, Antidumping, Business and industry, Cheese, Confidential business information, Countervailing duties, Freedom of information, Investigations, Reporting and recordkeeping requirements.

Dated: April 2, 2013.

Paul Piquado,

Assistant Secretary for Import Administration.

For the reasons stated, 19 CFR part 351 is amended as follows:

PART 351—ANTIDUMPING AND COUNTERVAILING DUTIES

■ 1. The authority citation for 19 CFR part 351 continues to read as follows:

Authority: 5 U.S.C. 301; 19 U.S.C. 1202 note; 19 U.S.C. 1303 note; 19 U.S.C. 1671 *et seq.;* and 19 U.S.C. 3538.

■ 2. In § 351.102, revise paragraph (b)(21) to read as follows:

§ 351.102 Definitions.

* * * * *

(b) * * *

(21) *Factual information.* ''Factual information'' means:

(i) Evidence, including statements of fact, documents, and data submitted either in response to initial and supplemental questionnaires, or, to rebut, clarify, or correct such evidence submitted by any other interested party;

(ii) Evidence, including statements of fact, documents, and data submitted either in support of allegations, or, to rebut, clarify, or correct such evidence submitted by any other interested party;

(iii) Publicly available information submitted to value factors under § 351.408(c) or to measure the adequacy of remuneration under § 351.511(a)(2), or, to rebut, clarify, or correct such publicly available information submitted by any other interested party;

(iv) Evidence, including statements of fact, documents and data placed on the record by the Department, or, evidence submitted by any interested party to rebut, clarify or correct such evidence placed on the record by the Department; and

(v) Evidence, including statements of fact, documents, and data, other than factual information described in paragraphs (b)(21)(i)–(iv) of this section, in addition to evidence submitted by any other interested party to rebut, clarify, or correct such evidence.

* * * * *

■ 3. Revise § 351.301 to read as follows:

§ 351.301 Time limits for submission of factual information.

(a) *Introduction.* This section sets forth the time limits for submitting factual information, as defined by § 351.102(b)(21). The Department obtains most of its factual information in antidumping and countervailing duty proceedings from submissions made by interested parties during the course of the proceeding. Notwithstanding paragraph (b) of this section, the Secretary may request any person to submit factual information at any time during a proceeding or provide additional opportunities to submit factual information. Section 351.302 sets forth the procedures for requesting an extension of such time limits, and provides that, unless expressly precluded by statute, the Secretary may, for good cause, extend any time limit established in the Department's regulations. Section 351.303 contains the procedural rules regarding filing (including procedures for filing on non-business days), format, translation, service, and certification of documents. In the Secretary's written request to an interested party for a response to a questionnaire or for other factual information, the Secretary will specify the following: The time limit for the response; the information to be provided; the form and manner in which the interested party must submit the information; and that failure to submit the requested information in the requested form and manner by the date specified may result in use of the facts available under section 776 of the Act and § 351.308.

(b) *Submission of factual information.* Every submission of factual information must be accompanied by a written explanation identifying the subsection of § 351.102(b)(21) under which the information is being submitted.

(1) If an interested party states that the information is submitted under § 351.102(b)(21)(v), the party must explain why the information does not satisfy the definitions described in § 351.102(b)(21)(i)–(iv).

(2) If the factual information is being submitted to rebut, clarify, or correct factual information on the record, the submitter must provide a written explanation identifying the information which is already on the record that the factual information seeks to rebut, clarify, or correct, including the name of

the interested party that submitted the information and the date on which the information was submitted.

(c) *Time limits.* The type of factual information determines the time limit for submission to the Department.

(1) *Factual information submitted in response to questionnaires.* During a proceeding, the Secretary may issue to any person questionnaires, which includes both initial and supplemental questionnaires. The Secretary will not consider or retain in the official record of the proceeding unsolicited questionnaire responses, except as provided under § 351.204(d)(2), or untimely filed questionnaire responses. The Secretary will reject any untimely filed or unsolicited questionnaire response and provide, to the extent practicable, written notice stating the reasons for rejection (see § 351.302(d)).

(i) Initial questionnaire responses are due 30 days from the date of receipt of such questionnaire. The time limit for response to individual sections of the questionnaire, if the Secretary requests a separate response to such sections, may be less than the 30 days allotted for response to the full questionnaire. In general, the date of receipt will be considered to be seven days from the date on which the initial questionnaire was transmitted.

(ii) Supplemental questionnaire responses are due on the date specified by the Secretary.

(iii) A notification by an interested party, under section 782(c)(1) of the Act, of difficulties in submitting information in response to a questionnaire issued by the Secretary is to be submitted in writing within 14 days after the date of the questionnaire or, if the questionnaire is due in 14 days or less, within the time specified by the Secretary.

(iv) A respondent interested party may request in writing that the Secretary conduct a questionnaire presentation. The Secretary may conduct a questionnaire presentation if the Secretary notifies the government of the affected country and that government does not object.

(v) *Factual information submitted to rebut, clarify, or correct questionnaire responses.* Within 14 days after an initial questionnaire response and within 10 days after a supplemental questionnaire response has been filed with the Department, an interested party other than the original submitter is permitted one opportunity to submit factual information to rebut, clarify, or correct factual information contained in the questionnaire response. Within seven days of the filing of such rebuttal, clarification, or correction to a questionnaire response, the original submitter of the questionnaire response is permitted one opportunity to submit factual information to rebut, clarify, or correct factual information submitted in the interested party's rebuttal, clarification or correction. The Secretary will reject any untimely filed rebuttal, clarification, or correction submission and provide, to the extent practicable, written notice stating the reasons for rejection (see § 351.302). If insufficient time remains before the due date for the final determination or final results of review, the Secretary may specify shorter deadlines under this section.

(2) *Factual information submitted in support of allegations.* Factual information submitted in support of allegations must be accompanied by a summary, not to exceed five pages, of the allegation and supporting data.

(i) *Market viability and the basis for determining normal value.* Allegations regarding market viability in an antidumping investigation or administrative review, including the exceptions in § 351.404(c)(2), are due, with all supporting factual information, 10 days after the respondent interested party files the response to the relevant section of the questionnaire, unless the Secretary alters this time limit.

(ii) *Sales at prices below the cost of production.* Allegations of sales at prices below the cost of production made by the petitioner or other domestic interested party are due within:

(A) In an antidumping investigation, on a country-wide basis, 20 days after the date on which the initial questionnaire was issued to any person, unless the Secretary alters this time limit; or, on a company-specific basis, 20 days after a respondent interested party files the response to the relevant section of the questionnaire, unless the relevant questionnaire response is, in the Secretary's view, incomplete, in which case the Secretary will determine the time limit;

(B) In an administrative review, new shipper review, or changed circumstances review, on a company-specific basis, 20 days after a respondent interested party files the response to the relevant section of the questionnaire, unless the relevant questionnaire response is, in the Secretary's view, incomplete, in which case the Secretary will determine the time limit; or

(C) In an expedited antidumping review, on a company-specific basis, 10 days after the date of publication of the notice of initiation of the review.

(iii) *Purchases of major inputs from an affiliated party at prices below the affiliated party's cost of production.* An allegation of purchases of major inputs from an affiliated party at prices below the affiliated party's cost of production made by the petitioner or other domestic interested party is due within 20 days after a respondent interested party files the response to the relevant section of the questionnaire, unless the relevant questionnaire response is, in the Secretary's view, incomplete, in which case the Secretary will determine the time limits.

(iv) *Countervailable subsidy; upstream subsidy.* A countervailable subsidy allegation made by the petitioner or other domestic interested party is due no later than:

(A) In a countervailing duty investigation, 40 days before the scheduled date of the preliminary determination, unless the Secretary extends this time limit for good cause; or

(B) In an administrative review, new shipper review, or changed circumstances review, 20 days after all responses to the initial questionnaire are filed with the Department, unless the Secretary alters this time limit.

(C) Exception for upstream subsidy allegation in an investigation. In a countervailing duty investigation, an allegation of upstream subsidies made by the petitioner or other domestic interested party is due no later than 60 days after the date of the preliminary determination.

(v) *Other allegations.* An interested party may submit factual information in support of other allegations not specified in paragraphs (c)(2)(i)–(iv) of this section. Upon receipt of factual information under this subsection, the Secretary will issue a memorandum accepting or rejecting the information and, to the extent practicable, will provide written notice stating the reasons for rejection. If the Secretary accepts the information, the Secretary will issue a schedule providing deadlines for submission of factual information to rebut, clarify or correct the factual information.

(vi) *Rebuttal, clarification, or correction of factual information submitted in support of allegations.* An interested party is permitted one opportunity to submit factual information to rebut, clarify, or correct factual information submitted in support of allegations 10 days after the date such factual information is served on an interested party.

(3) *Factual information submitted to value factors under § 351.408(c) or to measure the adequacy of remuneration under § 351.511(a)(2).*

(i) *Antidumping or countervailing duty investigations.* All submissions of factual information to value factors of production under § 351.408(c) in an antidumping investigation, or to measure the adequacy of remuneration under § 351.511(a)(2) in a countervailing duty investigation, are due no later than 30 days before the scheduled date of the preliminary determination;

(ii) *Administrative review, new shipper review, or changed circumstances review.* All submissions of factual information to value factors under § 351.408(c), or to measure the adequacy of remuneration under § 351.511(a)(2), are due no later than 30 days before the scheduled date of the preliminary results of review; and

(iii) *Expedited antidumping review.* All submissions of factual information to value factors under § 351.408(c) are due on a date specified by the Secretary.

(iv) *Rebuttal, clarification, or correction of factual information submitted to value factors under § 351.408(c) or to measure the adequacy of remuneration under § 351.511(a)(2).* An interested party is permitted one opportunity to submit publicly available information to rebut, clarify, or correct such factual information submitted pursuant to § 351.408(c) or § 351.511(a)(2) 10 days after the date such factual information is served on the interested party. An interested party may not submit additional, previously absent-from-the-record alternative surrogate value information under this subsection. Additionally, all factual information submitted under this subsection must be accompanied by a written explanation identifying what information already on the record of the ongoing proceeding the factual information is rebutting, clarifying, or correcting. Information submitted to rebut, clarify, or correct factual information submitted pursuant to § 351.408(c) will not be used to value factors under § 351.408(c).

(4) *Factual information placed on the record of the proceeding by the Department.* The Department may place factual information on the record of the proceeding at any time. An interested party is permitted one opportunity to submit factual information to rebut, clarify, or correct factual information placed on the record of the proceeding by the Department by a date specified by the Secretary.

(5) *Factual information not directly responsive to or relating to paragraphs (c)(1)–(4) of this section).* Paragraph (c)(5) applies to factual information other than that described in § 351.102(b)(21)(i)–(iv). The Secretary will reject information filed under paragraph (c)(5) that satisfies the definition of information described in § 351.102(b)(21)(i)–(iv) and that was not filed within the deadlines specified above. All submissions of factual information under this subsection are required to clearly explain why the information contained therein does not meet the definition of factual information described in § 351.102(b)(21)(i)–(iv), and must provide a detailed narrative of exactly what information is contained in the submission and why it should be considered. The deadline for filing such information will be 30 days before the scheduled date of the preliminary determination in an investigation, or 14 days before verification, whichever is earlier, and 30 days before the scheduled date of the preliminary results in an administrative review, or 14 days before verification, whichever is earlier.

(i) Upon receipt of factual information under this subsection, the Secretary will issue a memorandum accepting or rejecting the information and, to the extent practicable, will provide written notice stating the reasons for rejection.

(ii) If the Secretary accepts the information, the Secretary will issue a schedule providing deadlines for submission of factual information to rebut, clarify or correct the factual information.

[FR Doc. 2013–08227 Filed 4–9–13; 8:45 am]

BILLING CODE 3510–DS–P

DEPARTMENT OF DEFENSE

Office of the Secretary

32 CFR Part 226

[DOD–2012–OS–0041]

RIN 0790–AI88

Shelter for the Homeless

AGENCY: Office of the Under Secretary of Defense for Acquisition, Technology, and Logistics, DoD.

ACTION: Direct final rule with request for comments.

SUMMARY: The Department of Defense is updating current policies and procedures for the Defense Shelter for the Homeless Program. This direct final rule makes nonsubstantive changes to the existing rule for this program. The amendments correct the authority citation throughout the text, update organizational titles, and move procedures from the policy section into a separate procedures section. This rule is being published as a direct final rule as the Department of Defense does not expect to receive any adverse comments, and so a proposed rule is unnecessary.

DATES: The rule is effective on June 19, 2013 unless comments are received that would result in a contrary determination. Comments will be accepted on or before June 10, 2013.

ADDRESSES: You may submit comments, identified by docket number and or RIN number and title, by any of the following methods:

- *Federal Rulemaking Portal: http://www.regulations.gov.* Follow the instructions for submitting comments.
- *Mail:* Federal Docket Management System Office, 4800 Mark Center Drive, East Tower, Suite 02G09, Alexandria, VA 22350–3100.

Instructions: All submissions received must include the agency name and docket number or Regulatory Information Number (RIN) for this **Federal Register** document. The general policy for comments and other submissions from members of the public is to make these submissions available for public viewing on the Internet at *http://www.regulations.gov* as they are received without change, including any personal identifiers or contact information.

FOR FURTHER INFORMATION CONTACT: Mr. Randy Wagner, 703–571–9081.

SUPPLEMENTARY INFORMATION:

Direct Final Rule and Significant Adverse Comments

DoD has determined this rulemaking meets the criteria for a direct final rule because it involves nonsubstantive changes dealing with DoD's management of its Shelter for the Homeless Program. DoD expects no opposition to the changes and no significant adverse comments. However, if DoD receives a significant adverse comment, the Department will withdraw this direct final rule with publication in the **Federal Register**. A significant adverse comment is one that explains: (1) Why the direct final rule is inappropriate, including challenges to the rule's underlying premise or approach; or (2) why the direct final rule will be ineffective or unacceptable without a change. In determining whether a comment necessitates withdrawal of this direct final rule, DoD will consider whether it warrants a substantive response in a notice and comment process.

Executive Summary

I. Purpose of the Regulatory Action

a. The Department of Defense is updating current policies and

procedures for the Defense Shelter for the Homeless Program.

b. 10 U.S.C. 2556.

II. Summary of the Major Provisions of the Regulatory Action in Question

The amendments correct the authority citation throughout the text, update organizational titles, and move procedures from the policy section into a separate procedures section.

III. Costs and Benefits

There is no cost to the public. The costs to the Department of Defense for implementation of the authorities under this rule will include the administrative costs to process a request and the cost of the services provided incident to the furnishing of a shelter. The benefit is that homeless individuals will have shelter.

Regulatory Procedures

Executive Order 12866, ''Regulatory Planning and Review'' and Executive Order 13563, ''Improving Regulation and Regulatory Review''

It has been certified that 32 CFR part 226 does not:

(1) Have an annual effect on the economy of $100 million or more or adversely affect in a material way the economy; a section of the economy; productivity; competition; jobs; the environment; public health or safety; or state, local, or tribal governments or communities;

(2) Create a serious inconsistency or otherwise interfere with an action taken or planned by another agency;

(3) Materially alter the budgetary impact of entitlements, grants, user fees, or loan programs, or the rights and obligations of recipients thereof; or

(4) Raise novel legal or policy issues arising out of legal mandates, the President's priorities, or the principles set forth in these Executive Orders.

Sec. 202, Public Law 104–4, ''Unfunded Mandates Reform Act''

It has been certified that 32 CFR part 226 does not contain a Federal mandate that may result in the expenditure by state, local and tribal governments, in aggregate, or by the private sector, of $100 million or more in any one year.

Public Law 96–354, ''Regulatory Flexibility Act'' (5 U.S.C. 601)

It has been certified that 32 CFR part 226 is not subject to the Regulatory Flexibility Act (5 U.S.C. 601) because it would not, if promulgated, have a significant economic impact on a substantial number of small entities.

Public Law 96–511, ''Paperwork Reduction Act'' (44 U.S.C. Chapter 35)

It has been certified that this amendment rule for 32 CFR part 226 does not impose additional reporting or recordkeeping requirements under the Paperwork Reduction Act of 1995.

Executive Order 13132, ''Federalism''

It has been certified that this rule does not have federalism implications, as set forth in Executive Order 13132. This rule does not have substantial direct effects on:

(1) The States;

(2) The relationship between the National Government and the States; or

(3) The distribution of power and responsibilities among the various levels of government.

List of Subjects in 32 CFR Part 226

Armed forces, Federal buildings and facilities, Homeless, Intergovernmental relations.

Accordingly, 32 CFR part 226 is amended as follows.

PART 226—AMENDED

■ 1. The authority citation for part 226 is revised to read as follows:

Authority: 10 U.S.C. 2556

■ 2. Section 226.1 is revised to read as follows:

§ 226.1 Purpose.

This part implements 10 U.S.C. 2556 by establishing DoD policy, assigning responsibilities, and prescribing procedures for providing shelter for the homeless on military installations.

§ 226.5 [Removed]

■ 3. Remove § 226.5.

§§ 226.3 and 226.4 [Redesignated as §§ 226.4 and 226.5]

■ 4. Redesignate §§ 226.3 and 226.4 as §§ 226.4 and 226.5 respectively.

■ 5. Newly redesignated 226.4 is amended:

■ a. By revising the section heading;

■ b. By adding introductory text;

■ c. By revising paragraph (a);

■ d. In paragraph (b) by revising ''10 U.S.C. 2546'' to read ''10 U.S.C. 2556'';

■ e. In paragraph (c) by removing from the second sentence ''under the Shelter for the Homeless Program'' and adding in its place ''by this program'' and adding a third sentence;

■ f. In paragraph (d) introductory text by revising ''10 U.S.C. 2546'' to read ''10 U.S.C. 2556''; and

■ g. In paragraph (d)(6) by revising ''10 U.S.C. 2546'' to read ''10 U.S.C. 2556'' and removing ''and this part'' from the end of the paragraph.

The revisions and addition read as follows:

§ 226.4 Procedures.

It is DoD policy that:

(a) Shelters for the homeless may be established on military installations.

* * * * *

(c) * * * Shelter and incidental services provided under this part may be provided without reimbursement.

* * * * *

■ 6. Amend newly redesignated § 226.5:

■ a. By revising paragraph (a);

■ b. In paragraph (b) by revising ''Assistance Secretary'' to read ''Under Secretary'';

■ c. By revising paragraph (c)(2);

■ d. In paragraph (c)(4) by removing ''Shelter for the Homeless'' and revising ''10 U.S.C. 2546 and this part'' to read ''10 U.S.C. 2556''; and

■ e. In paragraph (d)(3) by revising ''DASD(I)'' to read ''DUSD(I&E).''

The revisions read as follows:

§ 226.5 Responsibilities.

(a) The Deputy Under Secretary of Defense (Installations and Environment) (DUSD(I&E)), under the authority, direction and control of the Under Secretary of Defense for Acquisition, Technology, and Logistics, shall administer the program and issue such supplemental guidance as is necessary.

* * * * *

(c) * * *

(2) Appoint a senior manager to monitor the program within the Department and to provide any assistance that may be required to the Office of the Deputy Under Secretary of Defense (Installations and Environment) (ODUSD(I&E)). Such official, after consultation with the ODUSD(I&E), shall approve or disapprove all requests to establish a shelter in accordance with 10 U.S.C. 2556 and this part.

* * * * *

Dated: February 1, 2013.

Patricia L. Toppings,

OSD Federal Register Liaison Officer, Department of Defense.

[FR Doc. 2013–03420 Filed 4–9–13; 8:45 am]

BILLING CODE 5001–06–P

DEPARTMENT OF HOMELAND SECURITY

Coast Guard

33 CFR Part 100

[Docket No. USCG–2013–0030]

RIN 1625–AA08

Special Local Regulations; Patriot Challenge Kayak Race, Ashley River; Charleston, SC

AGENCY: Coast Guard, DHS.

ACTION: Temporary final rule.

SUMMARY: The Coast Guard is establishing a special local regulation for the Patriot Challenge Kayak Race in Charleston, SC. The race will take place on April 13, 2013, on the Ashley River. This special local regulation is necessary to insure the safety of life on navigable waters of the United States during the race. The special local regulation will temporarily restrict vessel traffic in a portion of the Ashley River, preventing non-participant vessels from entering the regulated areas.

DATES: This rule is effective from 10 a.m. until 12 p.m. on April 13, 2013.

ADDRESSES: Documents mentioned in this preamble are part of docket USCG–2013–0030. To view documents mentioned in this preamble as being available in the docket, go to *http://www.regulations.gov,* type the docket number in the ''SEARCH'' box and click ''SEARCH.'' Click on Open Docket Folder on the line associated with this rulemaking. You may also visit the Docket Management Facility in Room W12–140 on the ground floor of the Department of Transportation West Building, 1200 New Jersey Avenue SE., Washington, DC 20590, between 9 a.m. and 5 p.m., Monday through Friday, except Federal holidays.

FOR FURTHER INFORMATION CONTACT: If you have questions on this rule, call Chief Warrant Officer Christopher Ruleman, Sector Charleston Waterways Management, U.S. Coast Guard; telephone (843) 740–3184, email *christopher.l.ruleman@uscg.mil.* If you have questions on viewing the docket, call Barbara Hairston, Program Manager, Docket Operations, telephone 202–366–9826.

SUPPLEMENTARY INFORMATION:

Table of Acronyms

DHS Department of Homeland Security
FR Federal Register
NPRM Notice of Proposed Rulemaking

A. Regulatory Information

The Coast Guard is issuing this temporary final rule without prior notice and opportunity to comment pursuant to authority under section 4(a) of the Administrative Procedure Act (APA) (5 U.S.C. 553(b)). This provision authorizes an agency to issue a rule without prior notice and opportunity to comment when the agency for good cause finds that those procedures are ''impracticable, unnecessary, or contrary to the public interest.'' Under 5 U.S.C. 553(b)(B), the Coast Guard finds that good cause exists for not publishing a notice of proposed rulemaking (NPRM) with respect to this rule because it is impracticable. The Coast Guard did not receive necessary information about the event until January 22, 2013. As a result, the Coast Guard did not have sufficient time to publish an NPRM and to receive public comments prior to the event.

Under 5 U.S.C. 553(d)(3), the Coast Guard finds that good cause exists for making this rule effective less than 30 days after publication in the **Federal Register**. For the same reasons discussed in the preceding paragraph, a 30 day notice period would be impracticable. Additionally, a delayed effective date would be contrary to the public interest because immediate action is needed to minimize potential danger to the race participant's participant vessels, spectators and the general public.

B. Basis and Purpose

The legal basis for the rule is the Coast Guard's authority to establish special local regulations: 33 U.S.C. 1233. The purpose of the rule is to insure safety of life on navigable waters of the United States during three Charleston Race Week sailboat races.

On Saturday, April 13, 2013, the Patriot Challenge Kayak Race is scheduled to take place on the waters of the Ashley River and Charleston Harbor. The race will commence at Brittlebank Park, transit south in the Ashley River, head north between Shutes Folly Island and the Charleston peninsula, and then turn around in Tidewater Reach. The race will then return to Brittlebank Park by the same route. The event consists of a large number of kayakers whose speeds are incomparable to powerboats. There will be safety vessels preceding the first participant kayakers, and following the last participant kayakers. The event poses significant risks to participants, spectators, and the boating public because of the large number of paddlers and recreational vessels that are expected in the area of the event. The special local regulation is necessary to ensure the safety of participants, spectators, and vessels from the hazards associated with the event.

C. Discussion of Rule

The special local regulation will designate a temporary special local regulation, on the Ashley River and Charleston Harbor in Charleston, South Carolina. The special local regulation will be enforced from 10 a.m. until 12 p.m. on April 13, 2013. Persons and vessels may not enter, transit through, anchor in, or remain within the safety zone unless authorized by the Captain of the Port Charleston or a designated representative.

Persons and vessels desiring to enter, transit through, anchor in, or remain within the regulated area may contact the Captain of the Port Charleston by telephone at (843) 740–7050, or a designated representative via VHF radio on channel 16, to request authorization. If authorization to enter, transit through, anchor in, or remain within the regulated area is granted by the Captain of the Port Charleston or a designated representative, all persons and vessels receiving such authorization must comply with the instructions of the Captain of the Port Charleston or a designated representative. The Coast Guard will provide notice of the special local regulation by Local Notice to Mariners, Broadcast Notice to Mariners, and on-scene designated representatives.

D. Regulatory Analyses

We developed this rule after considering numerous statutes and executive orders related to rulemaking. Below we summarize our analyses based on these statutes or executive orders.

1. Regulatory Planning and Review

This rule is not a significant regulatory action under section 3(f) of Executive Order 12866, Regulatory Planning and Review, and does not require an assessment of potential costs and benefits under section 6(a)(3) of Executive Order 12866 or under section 1 of Executive Order 13563. The Office of Management and Budget has not reviewed it under that Order.

The economic impact of this rule is not significant for the following reasons: (1) The rule will be in effect for only three hours; (2) although persons and vessels will not be able to enter, transit through, anchor in, or remain within the buffer zones without authorization from the Captain of the Port Charleston or a designated representative, they may operate in the surrounding area during the effective period; (3) persons and

vessels may still enter, transit through, anchor in, or remain within the buffer zones if authorized by the Captain of the Port Charleston or a designated representative; and (4) advance notification will be made to the local maritime community via broadcast notice to mariners.

2. Impact on Small Entities

The Regulatory Flexibility Act of 1980 (RFA), 5 U.S.C. 601–612, as amended, requires federal agencies to consider the potential impact of regulations on small entities during rulemaking. The term ''small entities'' comprises small businesses, not-for-profit organizations that are independently owned and operated and are not dominant in their fields, and governmental jurisdictions with populations of less than 50,000. The Coast Guard certifies under 5 U.S.C. 605(b) that this rule will not have a significant economic impact on a substantial number of small entities. This rule may affect the following entities, some of which may be small entities: The owners or operators of vessels intending to enter, transit through, anchor in, or remain within that portion of the Ashley River encompassed within the special local regulation between 10:00 a.m. and 12:00 p.m. on April 13, 2013. For the reasons discussed in the Regulatory Planning and Review section above, this rule will not have a significant economic impact on a substantial number of small entities.

3. Assistance for Small Entities

Under section 213(a) of the Small Business Regulatory Enforcement Fairness Act of 1996 (Pub. L. 104–121), we want to assist small entities in understanding this rule. If the rule would affect your small business, organization, or governmental jurisdiction and you have questions concerning its provisions or options for compliance, please contact the person listed in the **FOR FURTHER INFORMATION CONTACT**, above.

Small businesses may send comments on the actions of Federal employees who enforce, or otherwise determine compliance with, Federal regulations to the Small Business and Agriculture Regulatory Enforcement Ombudsman and the Regional Small Business Regulatory Fairness Boards. The Ombudsman evaluates these actions annually and rates each agency's responsiveness to small business. If you wish to comment on actions by employees of the Coast Guard, call 1–888–REG–FAIR (1–888–734–3247). The Coast Guard will not retaliate against small entities that question or complain about this rule or any policy or action of the Coast Guard.

4. Collection of Information

This rule calls for no new collection of information under the Paperwork Reduction Act of 1995 (44 U.S.C. 3501–3520).

5. Federalism

A rule has implications for federalism under Executive Order 13132, Federalism, if it has a substantial direct effect on the States, on the relationship between the national government and the States, or on the distribution of power and responsibilities among the various levels of government. We have analyzed this rule under that Order and have determined that it does not have implications for federalism.

6. Protest Activities

The Coast Guard respects the First Amendment rights of protesters. Protesters are asked to contact the person listed in the **FOR FURTHER INFORMATION CONTACT** section to coordinate protest activities so that your message can be received without jeopardizing the safety or security of people, places or vessels.

7. Unfunded Mandates Reform Act

The Unfunded Mandates Reform Act of 1995 (2 U.S.C. 1531–1538) requires Federal agencies to assess the effects of their discretionary regulatory actions. In particular, the Act addresses actions that may result in the expenditure by a State, local, or tribal government, in the aggregate, or by the private sector of $100,000,000 (adjusted for inflation) or more in any one year. Though this rule will not result in such an expenditure, we do discuss the effects of this rule elsewhere in this preamble.

8. Taking of Private Property

This rule will not affect a taking of private property or otherwise have taking implications under Executive Order 12630, Governmental Actions and Interference with Constitutionally Protected Property Rights.

9. Civil Justice Reform

This rule meets applicable standards in sections 3(a) and 3(b)(2) of Executive Order 12988, Civil Justice Reform, to minimize litigation, eliminate ambiguity, and reduce burden.

10. Protection of Children

We have analyzed this rule under Executive Order 13045, Protection of Children from Environmental Health Risks and Safety Risks. This rule is not an economically significant rule and does not create an environmental risk to health or risk to safety that may disproportionately affect children.

11. Indian Tribal Governments

This rule does not have tribal implications under Executive Order 13175, Consultation and Coordination with Indian Tribal Governments, because it does not have a substantial direct effect on one or more Indian tribes, on the relationship between the Federal Government and Indian tribes, or on the distribution of power and responsibilities between the Federal Government and Indian tribes.

12. Energy Effects

This action is not a ''significant energy action'' under Executive Order 13211, Actions Concerning Regulations That Significantly Affect Energy Supply, Distribution, or Use.

13. Technical Standards

This rule does not use technical standards. Therefore, we did not consider the use of voluntary consensus standards.

14. Environment

We have analyzed this rule under Department of Homeland Security Management Directive 023–01 and Commandant Instruction M16475.lD, which guide the Coast Guard in complying with the National Environmental Policy Act of 1969 (NEPA) (42 U.S.C. 4321–4370f), and have determined that this action is one of a category of actions that do not individually or cumulatively have a significant effect on the human environment. This rule involves a special local regulation issued in conjunction with a regatta or marine parade. This rule is categorically excluded, under figure 2–1, paragraph (34)(g), of the Commandant Instruction. We seek any comments or information that may lead to the discovery of a significant environmental impact from this rule.

List of Subjects in 33 CFR Part 100

Marine safety, Navigation (water), Reporting and recordkeeping requirements, Waterways.

For the reasons discussed in the preamble, the Coast Guard amends 33 CFR part 100 as follows:

PART 100—SAFETY OF LIFE ON NAVIGABLE WATERS

■ 1. The authority citation for part 100 continues to read as follows:

Authority: 33 U.S.C. 1233.

■ 2. Add § 100.T07–0030 to read as follows:

§ 100.T07–0030 Special Local Regulation; Patriot Challenge Kayak Race, Ashley River; Charleston, SC.

(a) *Regulated Areas.* The following regulated area is established as a special local regulation: All waters within a moving zone, beginning at Brittlebank Park, transiting south in the Ashley River, heading north between Shutes Folly Island and the Charleston peninsula, and then turning around in Tidewater Reach. The race will then return to Brittlebank Park by the same route in reverse order. The zone will at all times extend 75 yards both in front of the lead safety vessel preceding the first race participants; 75 yards behind the safety vessel trailing the last race participants; and at all times extending 100 yards on either side of participating race and safety vessels. Information regarding the identity of the lead safety vessel and the last safety vessel will be provided 1 day prior to the race via broadcast notice to mariners and marine safety information bulletins.

(b) *Definition.* The term ''designated representative'' means Coast Guard Patrol Commanders, including Coast Guard coxswains, petty officers, and other officers operating Coast Guard vessels, and Federal, state, and local officers designated by or assisting the Captain of the Port Charleston in the enforcement of the regulated areas.

(c) *Regulations.*

(1) All persons and vessels, except those participating in the Patriot Challenge or serving as safety vessels, are prohibited from entering, transiting through, anchoring in, or remaining within the regulated area.

(2) Persons and vessels desiring to enter, transit through, anchor in, or remain within the regulated area may contact the Captain of the Port Charleston by telephone at 843–740–7050, or a designated representative via VHF radio on channel 16 to request authorization. If authorization to enter, transit through, anchor in, or remain within the regulated areas is granted by the Captain of the Port Charleston or a designated representative, all persons and vessels receiving such permission must comply with the instructions of the Captain of the Port Charleston or a designated representative.

(3) The Coast Guard will provide notice of the regulated areas through advanced notice via broadcast notice to mariners and by on-scene designated representatives.

(d) *Effective Date.* The rule is effective from 10:00 a.m. until 12:00 p.m. on April 13, 2013.

Dated: March 28, 2013.

M.F. White,

Captain, U.S. Coast Guard, Captain of the Port Charleston.

[FR Doc. 2013–08392 Filed 4–9–13; 8:45 am]

BILLING CODE 9110–04–P

DEPARTMENT OF HOMELAND SECURITY

Coast Guard

33 CFR PART 165

[Docket No. USCG–2013–0210]

RIN 1625–AA00

Safety Zone; Lubbers Cup Regatta; Spring Lake, MI

AGENCY: Coast Guard, DHS.

ACTION: Temporary final rule.

SUMMARY: The Coast Guard is establishing a temporary safety zone on Spring Lake in Spring Lake, Michigan. This safety zone is intended to restrict vessels from a portion of Spring Lake due to the Lubbers Cup Regatta. This temporary safety zone is necessary to protect the surrounding public and vessels from the hazards associated with a race competition involving 60-foot rowing vessels.

DATES: This rule is effective from 3 p.m. on April 12, 2013, until 3 p.m. on April 13, 2013. This rule will be enforced from 3 p.m. until 7 p.m. on April 12, 2013, and from 8 a.m. until 3 p.m. on April 13, 2013.

ADDRESSES: Documents indicated in this preamble as being available in the docket are part of docket USCG–2013–0210 and are available online by going to *www.regulations.gov,* inserting USCG–2013–0210 in the ''Keyword'' box, and then clicking ''search.'' They are also available for inspection or copying at the Docket Management Facility (M–30), U.S. Department of Transportation, West Building Ground floor, Room W12–140, 1200 New Jersey Avenue SE., Washington DC 20590, between 9 a.m. and 5 p.m., Monday through Friday, except Federal holidays.

FOR FURTHER INFORMATION CONTACT: If you have questions on this temporary rule, contact or email MST1 Joseph McCollum, U.S. Coast Guard Sector Lake Michigan, at 414–747–7148 or *Joseph.P.McCollum@uscg.mil.* If you have questions on viewing the docket, call Barbara Hairston, Program Manager, Docket Operations, telephone 202–366–9826.

SUPPLEMENTARY INFORMATION:

Table of Acronyms

DHS Department of Homeland Security
FR Federal Register
NPRM Notice of Proposed Rulemaking
TFR Temporary Final Rule

A. Regulatory History and Information

On February 11, 2013, the Coast Guard published an NPRM in the **Federal Register** that listed safety zones corresponding to annual marine events in the Sector Lake Michigan zone. This NPRM included the safety zone for the Lubber's Cup Regatta on April 12–13, 2013 (the subject of this TFR). The Coast Guard received no comments on that docket (USCG–2013–0020) in regard to the Lubber's Cup Regatta. After the 30 day comment period for the NPRM closed, the Coast Guard submitted the final rule for publication.

The Coast Guard is issuing this temporary final rule without prior notice and opportunity to comment pursuant to authority under section 4(a) of the Administrative Procedure Act (APA) (5 U.S.C. 553(b)). This provision authorizes an agency to issue a rule without prior notice and opportunity to comment when the agency for good cause finds that those procedures are ''impracticable, unnecessary, or contrary to the public interest.'' Under 5 U.S.C. 553(b)(B), the Coast Guard finds that good cause exists for not publishing a notice of proposed rulemaking with respect to this rule because it is unnecessary. The public already had an opportunity to comment on this rule and the Coast Guard received no comments.

Because the Lubber's Cup Regatta would occur within 30 days of the publication, the Coast Guard finds that good cause exists under 5 U.S.C. 553(d)(3), for making this rule effective less than 30 days after publication in the **Federal Register**. Waiting for a 30 day delayed effective date would be impracticable and contrary to the public interest because it would inhibit the Coast Guard's ability to protect vessels from the hazards associated with the Lubbers Cup Regatta on April 12–13, 2013, which are discussed further below.

B. Basis and Purpose

The legal basis for the rule is the Coast Guard's authority to establish regulated navigation areas and limited access areas: 33 U.S.C. 1231; 46 U.S.C. Chapter 701, 3306, 3703; 50 U.S.C. 191, 195; 33 CFR 1.05–1, 6.04–1, 6.04–6, 160.5; Pub. L. 107–295, 116 Stat. 2064; Department of Homeland Security Delegation No. 0170.1.

On April 12 and 13, 2013, the Lubbers Cup Regatta will be held on Spring Lake in Spring Lake, Michigan. This competition will extend for approximately one mile along the Lake and is expected to involve more than 60 rowing vessels and 500 spectators. The Captain of the Port, Sector Lake Michigan, has determined that this competition will pose a significant risk to public safety and property. Such hazards include the collision of race and recreational vessels in a congested area, and capsizing competitors and spectators' vessels.

C. Discussion of Rule

With the aforementioned hazards in mind, the Captain of the Port, Sector Lake Michigan, has determined that this temporary safety zone is necessary to ensure the safety of persons and vessels during the Lubbers Cup Regatta on Spring Lake. This zone is effective from 3 p.m. on April 12, 2013, until 3 p.m. on April, 13, 2013. This zone will be enforced from 3 p.m. until 7 p.m. on April 12, 2013, and from 8 a.m. until 3 p.m. on April 13, 2013.

The safety zone will encompass all waters of Spring Lake within a rectangle that is approximately 6,300 by 300 feet. The rectangle will be bounded by the points beginning at 43°04′55″ N, 086°12′32″ W; then east to 43°04′57″ N, 086°11′6″ W; then south to 43°04′54″ N, 086°11′5″ W; then west to 43°04′52″ N, 086°12′32″ W; then north back to the point of origin (NAD 83).

Entry into, transiting, or anchoring within the safety zone is prohibited unless authorized by the Captain of the Port, Sector Lake Michigan, or his designated on-scene representative. The Captain of the Port or his designated on-scene representative may be contacted via VHF Channel 16.

D. Regulatory Analyses

We developed this rule after considering numerous statutes and executive orders related to rulemaking. Below we summarize our analyses based on these statutes or executive orders.

1. Regulatory Planning and Review

This rule is not a significant regulatory action under section 3(f) of Executive Order 12866, Regulatory Planning and Review, as supplemented by Executive Order 13563, Improving Regulation and Regulatory Review, and does not require an assessment of potential costs and benefits under section 6(a)(3) of Executive Order 12866 or under section 1 of Executive Order 13563. The Office of Management and Budget has not reviewed it under those Orders. It is not ''significant'' under the regulatory policies and procedures of the Department of Homeland Security (DHS). We conclude that this rule is not a significant regulatory action because we anticipate that it will have minimal impact on the economy, will not interfere with other agencies, will not adversely alter the budget of any grant or loan recipients, and will not raise any novel legal or policy issues. The safety zone created by this rule will be small and enforced for only two days. Under certain conditions, moreover, vessels may still transit through the safety zone when permitted by the Captain of the Port.

2. Impact on Small Entities

The Regulatory Flexibility Act of 1980 (RFA), 5 U.S.C. 601–612, as amended, requires federal agencies to consider the potential impact of regulations on small entities during rulemaking. The Coast Guard certifies under 5 U.S.C. 605(b) that this rule will not have a significant economic impact on a substantial number of small entities.

This rule will affect the following entities, some of which might be small entities: the owners or operators of vessels intending to transit or anchor in a portion of Spring Lake in Spring Lake, Michigan on April 12 and 13, 2013.

This safety zone will not have a significant economic impact on a substantial number of small entities for the following reasons: This safety zone would be effective and thus subject to enforcement for only two days. Traffic may be allowed to pass through the zone with the permission of the Captain of the Port. The Captain of the Port can be reached via VHF channel 16. Before the activation of the zone, we will issue local Broadcast Notice to Mariners.

3. Assistance for Small Entities

Under section 213(a) of the Small Business Regulatory Enforcement Fairness Act of 1996 (Pub. L. 104–121), we want to assist small entities in understanding this rule. If the rule would affect your small business, organization, or governmental jurisdiction and you have questions concerning its provisions or options for compliance, please contact the person listed in the **FOR FURTHER INFORMATION CONTACT** section above.

Small businesses may send comments on the actions of Federal employees who enforce, or otherwise determine compliance with, Federal regulations to the Small Business and Agriculture Regulatory Enforcement Ombudsman and the Regional Small Business Regulatory Fairness Boards. The Ombudsman evaluates these actions annually and rates each agency's responsiveness to small business. If you wish to comment on actions by employees of the Coast Guard, call 1–888–REG–FAIR (1–888–734–3247). The Coast Guard will not retaliate against small entities that question or complain about this rule or any policy or action of the Coast Guard.

4. Collection of Information

This rule will not call for a new collection of information under the Paperwork Reduction Act of 1995 (44 U.S.C. 3501–3520).

5. Federalism

A rule has implications for federalism under Executive Order 13132, Federalism, if it has a substantial direct effect on the States, on the relationship between the national government and the States, or on the distribution of power and responsibilities among the various levels of government. We have analyzed this rule under that Order and determined that this rule does not have implications for federalism.

6. Unfunded Mandates Reform Act

The Unfunded Mandates Reform Act of 1995 (2 U.S.C. 1531–1538) requires Federal agencies to assess the effects of their discretionary regulatory actions. In particular, the Act addresses actions that may result in the expenditure by a State, local, or tribal government, in the aggregate, or by the private sector of $100,000,000 (adjusted for inflation) or more in any one year. Though this rule will not result in such an expenditure, we do discuss the effects of this rule elsewhere in this preamble.

7. Taking of Private Property

This rule will not cause a taking of private property or otherwise have taking implications under Executive Order 12630, Governmental Actions and Interference with Constitutionally Protected Property Rights.

8. Civil Justice Reform

This rule meets applicable standards in sections 3(a) and 3(b)(2) of Executive Order 12988, Civil Justice Reform, to minimize litigation, eliminate ambiguity, and reduce burden.

9. Protection of Children

We have analyzed this rule under Executive Order 13045, Protection of Children from Environmental Health Risks and Safety Risks. This rule is not an economically significant rule and does not create an environmental risk to health or risk to safety that may disproportionately affect children.

10. Indian Tribal Governments

This rule does not have tribal implications under Executive Order 13175, Consultation and Coordination with Indian Tribal Governments, because it does not have a substantial direct effect on one or more Indian tribes, on the relationship between the Federal Government and Indian tribes, or on the distribution of power and responsibilities between the Federal Government and Indian tribes.

11. Energy Effects

This action is not a ''significant energy action'' under Executive Order 13211, Actions Concerning Regulations That Significantly Affect Energy Supply, Distribution, or Use.

12. Technical Standards

This rule does not use technical standards. Therefore, we did not consider the use of voluntary consensus standards.

13. Environment

We have analyzed this rule under Department of Homeland Security Management Directive 023–01 and Commandant Instruction M16475.lD, which guide the Coast Guard in complying with the National Environmental Policy Act of 1969 (NEPA)(42 U.S.C. 4321–4370f), and have determined that this action is one of a category of actions that do not individually or cumulatively have a significant effect on the human environment. This rule involves the establishment of a safety zone and, therefore it is categorically excluded from further review under paragraph 34(g) of Figure 2–1 of the Commandant Instruction. An environmental analysis checklist supporting this determination and a Categorical Exclusion Determination are available in the docket USCG–2013–0020 where indicated under **ADDRESSES**. We seek any comments or information that may lead to the discovery of a significant environmental impact from this rule.

List of Subjects in 33 CFR Part 165

Harbors, Marine safety, Navigation (water), Reporting and recordkeeping requirements, Security measures, Waterways.

For the reasons discussed in the preamble, the Coast Guard amends 33 CFR parts 165 as follows:

PART 165—REGULATED NAVIGATION AREAS AND LIMITED ACCESS AREAS

■ 1. The authority citation for part 165 continues to read as follows:

Authority: 33 U.S.C. 1231; 46 U.S.C. Chapters 701, 3306, 3703; 50 U.S.C. 191, 195; 33 CFR 1.05–1, 6.04–1, 6.04–6, and 160.5; Pub. L. 107–295, 116 Stat. 2064; Department of Homeland Security Delegation No. 0170.1.

■ 2. Add § 165.T09–0210 to read as follows:

§ 165.T09–0210 Safety Zone; Lubbers Cup Regatta; Spring Lake, Michigan.

(a) *Location.* The safety zone will encompass all waters of Spring Lake within a rectangle that is approximately 6,300 by 300 feet. The rectangle will be bounded by the points beginning at 43°04′55″ N, 086°12′32″ W; then east to 43°04′57″ N, 086°11′6″ W; then south to 43°04′54″ N, 086°11′5″ W; then west to 43°04′52″ N, 086°12′32″ W; then north back to the point of origin (NAD 83).

(b) *Effective and enforcement period.* This rule is effective from 3 p.m. on April 12, 2013, until 3 p.m. on April 13, 2013. This rule will be enforced from 3 p.m. until 7 p.m. on April 12, 2013, and from 8 a.m. until 3 p.m. on April 13, 2013.

(c) *Regulations.* (1) In accordance with the general regulations in § 165.23 of this part, entry into, transiting, or anchoring within this safety zone is prohibited unless authorized by the Captain of the Port, Sector Lake Michigan or his designated on-scene representative.

(2) This safety zone is closed to all vessel traffic, except as may be permitted by the Captain of the Port, Sector Lake Michigan or his designated on-scene representative.

(3) The ''on-scene representative'' of the Captain of the Port, Sector Lake Michigan is any Coast Guard commissioned, warrant or petty officer who has been designated by the Captain of the Port, Sector Lake Michigan to act on his behalf.

(4) Vessel operators desiring to enter or operate within the safety zone shall contact the Captain of the Port, Sector Lake Michigan or his on-scene representative to obtain permission to do so. The Captain of the Port, Sector Lake Michigan or his on-scene representative may be contacted via VHF Channel 16. Vessel operators given permission to enter or operate in the safety zone must comply with all directions given to them by the Captain of the Port, Sector Lake Michigan, or his on-scene representative.

Dated: March 27, 2013.

M.W. Sibley,

Captain, U.S. Coast Guard, Captain of the Port, Sector Lake Michigan.

[FR Doc. 2013–08311 Filed 4–9–13; 8:45 am]

BILLING CODE 9110–04–P

DEPARTMENT OF VETERANS AFFAIRS

38 CFR Part 59

RIN 2900–AO60

Grants to States for Construction or Acquisition of State Homes

AGENCY: Department of Veterans Affairs.

ACTION: Interim final rule.

SUMMARY: This interim final rule amends the Department of Veterans Affairs (VA) regulation on the prioritization of State applications for VA grants for the construction or acquisition of State home facilities that furnish domiciliary, nursing home, or adult day health care to veterans. As amended, the regulation gives preference to State applications that would use grant funds solely or primarily (under certain circumstances) to remedy cited life or safety deficiencies. This rulemaking also makes certain necessary technical amendments to regulations governing State home grants.

DATES: *Effective date:* This interim final rule is effective April 10, 2013. *Comment date:* Comments must be received by VA on or before June 10, 2013.

ADDRESSES: Written comments may be submitted by email through *http://www.regulations.gov;* by mail or hand-delivery to Director, Regulation Policy and Management (02REG), Department of Veterans Affairs, 810 Vermont Avenue NW., Room 1068, Washington, DC 20420; or by fax to (202) 273–9026. (This is not a toll-free number.) Comments should indicate that they are submitted in response to ''RIN 2900–AO60—Grants to States for Construction or Acquisition of State Homes.'' Copies of comments received will be available for public inspection in the Office of Regulation Policy and Management, Room 1068, between the hours of 8:00 a.m. and 4:30 p.m., Monday through Friday (except holidays). Please call (202) 461–4902 for an appointment. (This is not a toll-free number.) In addition, during the comment period, comments may be viewed online through the Federal Docket Management System (FDMS) at *http://www.regulations.gov.*

FOR FURTHER INFORMATION CONTACT: Brandi Fate, Director, Capital Asset Management and Support (10NA5), Veterans Health Administration, 810 Vermont Avenue NW., Washington, DC 20420, (202) 632–7901. (This is not a toll-free number.)

SUPPLEMENTARY INFORMATION: Pursuant to subchapter III of chapter 81 of title 38, United States Code, VA is authorized to provide grant funds to support the acquisition, construction, expansion, remodeling or alteration by States of State home facilities that furnish domiciliary, nursing home, or adult day health care to veterans. States that desire such assistance must submit to VA an application that VA must assess and prioritize in accordance with the criteria set forth in 38 U.S.C. 8135(c)(2)(A) through (H). VA has implemented this statutory authority in part 59 of title 38, Code of Federal Regulations.

Under 38 U.S.C. 8135(c)(2) and 38 CFR 59.50, VA prioritizes the applications for the construction grant funds each fiscal year. Pursuant to these authorities, VA must generally give the top priority to applications with certified State matching funds, which are prioritized in priority group 1 under 38 CFR 59.50(a)(1). VA further subprioritizes the priority group 1 applications based on the type of project described in the application. Prior to this rulemaking, there were six subpriority groups for priority group 1 applications (i.e., applications with certified State matching funds). This rulemaking adds one more subpriority group to better reflect VA's emphasis on the safety of State home residents and program participants. As a result, there are now a total of seven subpriority groups.

Priority group 1, subpriority group 1, at 38 CFR 59.50(a)(1)(i), is for applications for projects that remedy life or safety deficiencies and that have matching State funding. This interim final rule makes a number of changes to this subpriority group that will allow VA to more effectively prioritize life or safety projects when awarding State home construction grants.

First, under paragraph (a)(1)(i), as amended, VA prioritizes in subpriority group 1 applications for projects that are solely or primarily intended to remedy a condition or conditions at an existing facility that have been cited as threatening the life or safety of the residents or program participants. Formerly, § 59.50(f) directed that projects with multiple components be categorized in the priority group towards which the preponderance of the costs in the application would be dedicated. Therefore, an application could be prioritized in priority group 1, subpriority group 1, at § 59.50(a)(1)(i), if a State combined a project to remedy a citation with another type of project, as long as the larger share of the project cost was used to remedy the citation. Prior to this rulemaking, there were no stated limits on combining life or safety projects and projects unrelated to protecting residents and participants' life or safety. As revised, the rule allows for such ''mixed'' projects only when the total cost of the life or safety project on its own would be under the $400,000 minimum required by § 59.80 and 38 U.S.C. 8134(d)(2)(A), and the majority of the funds sought will be used to remedy a citation. Allowing States to submit applications with components unrelated to life or safety under these limited circumstances will help VA ensure that less costly life or safety projects are ranked in subpriority group 1 for VA grant funding. This rulemaking will ensure that VA does not rank projects in priority 1, subpriority group 1, where it is unnecessary to mix life or safety projects and projects unrelated to protecting life or safety (i.e., where the life or safety project by itself meets the statutory minimum), and in this manner will better ensure that VA directs the maximum amount of grant funds to projects that protect the lives and safety of the residents and participants.

Second, under § 59.50(a)(1)(i), as amended, we clarify which VA staff members may issue citations for threats to life or safety in a State home. Prior to this rulemaking, this paragraph provided that such citations may be issued by a ''VA Life Safety Engineer.'' This position is not currently used by VA. Therefore, we have replaced this reference with language that adequately identifies the VA offices responsible for issuing these citations.

Third, we specify that applications for projects for the addition or replacement of building utility systems or features may be included in priority group 1, subpriority group 1, if the projects are necessary to remedy a cited threat to the life or safety of residents and program participants. Prior to this amendment, VA could only prioritize applications for projects adding or replacing utility systems or features in priority group 1, subpriority group 4. In order to best protect the lives and safety of residents or program participants in State veterans homes, we believe it is necessary to include these projects in subpriority group 1 under the limited circumstances that they are needed to remedy a life or safety threat.

Fourth, revised § 59.50(a)(1)(i) now specifically refers to ''[s]ecurity'' projects. Under the prior rule, all applications for projects that would remedy cited threats to life or safety conditions were further prioritized in the following order: Seismic, building construction, egress, building compartmentalization, fire alarm/detection, asbestos/hazardous materials, and ''all other projects.'' In the past, security projects such as video cameras to monitor the inside or outside of the building or other devices to watch or secure the premises have been prioritized as ''other projects.'' Based on our administration of the State home program, we believe that security projects should be given higher priority. Therefore, we add ''[s]ecurity'' following ''[f]ire alarm/detection'' to the list of conditions used to prioritize applications ranked in subpriority group 1. We also reorganize the listed prioritizations in separate paragraphs, so that the list is easier to identify and read.

Fifth, VA has noticed instances in which States with outstanding citations for life or safety threats submit and are provided funding for applications for grants for projects unrelated to protecting residents and participants' lives or safety. Prior to this amendment, VA's regulations did not provide any mechanism for VA to encourage States to remedy outstanding life or safety citations. Therefore, this rulemaking adds a new penultimate subpriority group in priority group 1 for applications from States that have failed to demonstrate they have remedied, or will remedy, a life or safety citation. Under revised § 59.50(e), a State that has an existing State home with an outstanding citation must include in all of its applications for grant funds a description of a reasonable plan to remedy the citations. Revised paragraph (e) does not require the State to seek a VA grant to fund such remedy; however, failure to provide such a plan would result in decreased prioritization of the State's applications in the manner described in paragraph (e)(1), which states that applications from that State for a project for which the State has authorized matching funds will be placed in priority group 1, new subpriority group 6, or paragraph (e)(2), which states that applications from that State with an outstanding citation for a project without matching funds will be placed in a new priority group 7 that is described in paragraph (a)(7). By doing so, VA will reduce the likelihood of funding new grants from States with outstanding safety citations. VA's authority to establish this new subpriority group is 38 U.S.C. 8135(c)(2)(G), which authorizes VA to prioritize applications that ''meet[ ] other criteria as the Secretary [of Veterans Affairs] determines appropriate and has established in regulations.''

The final change to § 59.50(a)(1)(i) clarifies that not all residents or

participants need to be threatened by a condition or conditions for an application to be ranked in priority group 1, subpriority group 1. In fact, we believe the statutory language authorizes including applications that remedy conditions that only threaten one resident or participant. For example, if a condition threatens the safety of a resident in only one nursing home or domiciliary bed, we believe an application to remedy that condition could be ranked in subpriority group 1.

In addition to the changes to priority group 1, subpriority group 1 described above, this interim final rule amends certain other priority and subpriority groups; the amendments are described as follows.

Section 59.50(a)(1)(iv) is revised to reorganize the listed prioritizations to make them easier to read. We also clarify VA's authority to provide grants for certain types of renovations in new paragraph (a)(1)(iv)(A) and (B). VA has interpreted its authority to prioritize States' applications for grants for renovations at 38 U.S.C. 8135(c)(2)(E) as authorizing the same prioritization for applications to replace an existing building when needed to serve the same purposes as a renovation. This is consistent with VA's current procedures and is reflected in the example set forth in the note to § 59.50(a)(1) which indicates that priority group 1, subpriority group 4, includes applications for ''Nursing Unit Renovation/Replacement.''

The note to § 59.50(a)(1), which contains a chart to aid readers' understanding how VA prioritizes projects in priority group 1, will be amended to conform with the changes to this section.

VA will continue to perform a final prioritization of applications in each priority or subpriority group based on the date that VA receives the application, with the applications received earlier given higher priority. The prior rule had that stipulation in each priority and subpriority group paragraph, but the revised rule states it only once at new § 59.50(d).

This rule updates delegations of VA's authority for administration of the State home construction grant program. VHA recently changed its organizational structure, and has aligned management of the State home construction grant program under the director of the Office of Capital Asset Management and Support. These authorities were previously assigned to the Chief Consultant of the Office of Geriatrics and Extended Care. VHA is, therefore, revising its regulations at §§ 59.4 and 59.5 to reflect the new organizational structure.

Once a priority list is approved by the Secretary, VA cannot change it unless a change is needed as a result of an appeal. See 38 CFR 59.50(g). This rulemaking, therefore, will not affect the ranking of projects on a priority list that has been approved by the Secretary.

Administrative Procedure Act

The Secretary finds that there is good cause, under 5 U.S.C. 553(b)(B) and (d)(3), to dispense with the opportunity for advance notice and opportunity for public comment and good cause to publish this rule with an immediate effective date. As stated above, VA's current regulations do not provide the necessary tools to use public funds more effectively in the interest of veterans' safety. For example, during its fiscal year 2011 survey of State homes, VA cited nearly 2.5 percent of State homes for deficiencies in emergency power, to include illuminating exit signs, and powering emergency communication systems; these deficiencies pose threats to veterans' safety. This regulation would close a loophole whereby a State with a cited safety deficiency in one State home could still apply for, and be likely to receive, a grant from VA to construct or acquire a different State home. VA finds that continuing to fund applications in this manner is contrary to VA's priorities of ensuring veterans' safety.

Because this interim final rule will help VA ensure veterans' lives and safety are protected in State homes, the Secretary finds that it is contrary to the public interest to delay this rule for the purpose of soliciting advance public comment or to have a delayed effective date. Furthermore, it would be against the public interest to award publicly funded grant money to States that have not remedied, or do not have a plan for remedying, safety citations in existing State homes. For the above reasons, the Secretary issues this rule as an interim final rule, effective immediately upon publication. VA will consider and address comments that are received within 60 days of the date this interim final rule is published in the **Federal Register**.

Effect of Rulemaking

Title 38 of the Code of Federal Regulations, as revised by this interim final rulemaking, represents VA's implementation of its legal authority on this subject. Other than future amendments to this regulation or governing statutes, no contrary guidance or procedures are authorized. All existing or subsequent VA guidance must be read to conform with this rulemaking if possible, or, if not possible, such guidance is superseded by this rulemaking.

Paperwork Reduction Act

This interim final rule contains no provisions constituting a collection of information under the Paperwork Reduction Act of 1995 (44 U.S.C. 3501–3521).

Regulatory Flexibility Act

The Secretary hereby certifies that this interim final rule will not have a significant economic impact on a substantial number of small entities as they are defined in the Regulatory Flexibility Act, 5 U.S.C. 601–612. This interim final rule will directly affect only States and will not directly affect small entities. Therefore, pursuant to 5 U.S.C. 605(b), this rulemaking is exempt from the initial and final regulatory flexibility analysis requirements of 5 U.S.C. 603 and 604.

Executive Order 12866 and 13563

Executive Orders 12866 and 13563 direct agencies to assess the costs and benefits of available regulatory alternatives and, when regulation is necessary, to select regulatory approaches that maximize net benefits (including potential economic, environmental, public health and safety effects, and other advantages; distributive impacts; and equity). Executive Order 13563 (Improving Regulation and Regulatory Review) emphasizes the importance of quantifying both costs and benefits, reducing costs, harmonizing rules, and promoting flexibility. Executive Order 12866 (Regulatory Planning and Review) defines a ''significant regulatory action,'' requiring review by the Office of Management and Budget (OMB) unless OMB waives such review, as ''any regulatory action that is likely to result in a rule that may: (1) Have an annual effect on the economy of $100 million or more or adversely affect in a material way the economy, a sector of the economy, productivity, competition, jobs, the environment, public health or safety, or State, local, or tribal governments or communities; (2) Create a serious inconsistency or otherwise interfere with an action taken or planned by another agency; (3) Materially alter the budgetary impact of entitlements, grants, user fees, or loan programs or the rights and obligations of recipients thereof; or (4) Raise novel legal or policy issues arising out of legal mandates, the President's priorities, or the principles set forth in this Executive Order.''

The economic, interagency, budgetary, legal, and policy implications of this regulatory action have been examined, and it has been determined not to be a significant regulatory action under Executive Order 12866.

Unfunded Mandates Reform Act

The Unfunded Mandates Reform Act of 1995 requires, at 2 U.S.C. 1532, that agencies prepare an assessment of anticipated costs and benefits before issuing any rule that may result in the expenditure by State, local, and tribal governments, in the aggregate, or by the private sector, of $100 million or more (adjusted annually for inflation) in any one year. This interim final rule will have no such effect on State, local, and tribal governments, or on the private sector.

Catalog of Federal Domestic Assistance Numbers

The Catalog of Federal Domestic Assistance numbers and titles for the programs affected by this document are 64.005, Grants to States for Construction of State Home Facilities; 64.008, Veterans Domiciliary Care; 64.009, Veterans Medical Care Benefits; 64.010, Veterans Nursing Home Care; 64.014, Veterans State Domiciliary Care; 64.015, Veterans State Nursing Home Care; 64.016, Veterans State Hospital Care; 64.018, Sharing Specialized Medical Resources; 64.022, Veterans Home Based Primary Care; 64.024, VA Homeless Providers Grant and Per Diem Program; and 64.026, Veterans State Adult Day Health Care.

Signing Authority

The Secretary of Veterans Affairs, or designee, approved this document and authorized the undersigned to sign and submit the document to the Office of the Federal Register for publication electronically as an official document of the Department of Veterans Affairs. John R. Gingrich, Chief of Staff, Department of Veterans Affairs, approved this document on March 11, 2013 for publication.

List of Subjects in 38 CFR Part 59

Administrative practice and procedure, Alcohol abuse, Alcoholism, Claims, Day care, Dental health, Drug abuse, Foreign relations, Government contracts, Grant programs—health, Grant programs—veterans, Health care, Health facilities, Health professions, Health records, Homeless, Medical and dental schools, Medical devices, Medical research, Mental health programs, Nursing homes, Reporting and recordkeeping requirements, Travel and transportation expenses, Veterans.

Dated: April 5, 2013.

William F. Russo,

Deputy Director, Office of Regulation Policy and Management, Office of the General Counsel, Department of Veterans Affairs.

For the reasons stated in the preamble, the Department of Veterans Affairs amends 38 CFR part 59 as follows:

PART 59—GRANTS TO STATES FOR CONSTRUCTION OR ACQUISITION OF STATE HOMES

■ 1. The authority citation for part 59 continues to read as follows:

Authority: 38 U.S.C. 101, 501, 1710, 1742, 8105, 8131–8137.

§ 59.4 [Amended]

■ 2. Amend § 59.4 by removing ''Chief Consultant, Geriatrics and Extended Care'' and adding, in its place, ''Director, Capital Asset Management and Support''.

§ 59.5 [Amended]

■ 3. Amend § 59.5 by removing ''Chief Consultant, Geriatrics and Extended Care (114)'' and adding, in its place, ''Director, Capital Asset Management and Support (10NA5)''.

■ 4. Amend § 59.50 by:

■ a. In paragraph (a) introductory text, removing ''paragraphs (b) and (c) of'' and adding ''otherwise'' immediately after ''Except as''.

■ b. Revising paragraphs (a)(1)(i) through (vi) and adding paragraph (a)(1)(vii).

■ c. Revising paragraphs (a)(2) through (7) and adding paragraph (a)(8).

■ d. Removing paragraph (f).

■ e. Redesignating paragraph (d) as new paragraph (f).

■ f. Adding a new paragraph (d).

■ g. Redesignating paragraph (g) as paragraph (i).

■ h. Redesignating paragraph (e) as new paragraph (g).

■ i. Adding new paragraph (e).

■ j. Adding paragraph (h).

The revisions and additions read as follows:

§ 59.50 Priority list.

(a) * * *

(1) * * *

(i) *Priority group 1—subpriority 1.* An application for a life or safety project, which means a project to remedy a condition, or conditions, at an existing facility that have been cited as threatening to the lives or safety of one or more of the residents or program participants in the facility by a VA safety office, VA engineering office, or other VA office with responsibility for life and safety inspections; a State or local government agency (including a Fire Marshal); or an accrediting institution (including the Joint Commission on Accreditation of Healthcare Organizations). Unless an addition or replacement of building utility systems or features is necessary to remedy a cited threat to the lives or safety of residents and program participants, this priority group does not include applications for the addition or replacement of building utility systems or features; such applications will be prioritized in accordance with the criteria in subpriority group 5 of priority group 1. An application may be included in this subpriority group only if all of the funds requested would be used for a life or safety project; or, if the estimated cost of the life or safety project is under $400,000.00, and the majority of the funds requested would be used for such a project. Projects in this subpriority group will be further prioritized in the following order:

(A) Seismic;

(B) Building construction;

(C) Egress;

(D) Building compartmentalization (e.g., smoke barrier, fire walls);

(E) Fire alarm/detection;

(F) Security;

(G) Asbestos/hazardous materials; and

(H) All other projects (e.g., nurse call systems, patient lifts).

(ii) *Priority group 1—subpriority 2.* An application from a State that has not previously applied for a grant under 38 U.S.C. 8131–8137 for construction or acquisition of a State nursing home.

(iii) *Priority group 1—subpriority 3.* An application for construction or acquisition of a nursing home or domiciliary from a State that has a great need for the beds that the State, in that application, proposes to establish.

(iv) *Priority group 1—subpriority 4.* An application from a State for renovations to a State Home facility other than renovations that would be included in subpriority group 1 of priority group 1. Projects will be further prioritized in the following order:

(A) Adult day health care renovation and construction of a new adult day health care facility that replaces an existing facility;

(B) Nursing home renovation (e.g., patient privacy) and construction of a new nursing home that replaces an existing nursing home;

(C) Code compliance under the Americans with Disabilities Act;

(D) Building systems and utilities (e.g., electrical; heating, ventilation, and

air conditioning (HVAC); boiler; medical gasses; roof; elevators);

(E) Clinical-support facilities (e.g., for dietetics, laundry, rehabilitation therapy); and

(F) General renovation/upgrade (e.g., warehouse, storage, administration/office, multipurpose).

(v) *Priority group 1—subpriority 5.* An application for construction or acquisition of a nursing home or domiciliary from a State that has a significant need for the beds that the State in that application proposes to establish.

(vi) *Priority group 1—subpriority 6.* An application for construction or acquisition of a nursing home or domiciliary from a State that has not demonstrated that State funds are being used to protect the lives or safety of the residents and program participants of the facility as required in § 59.50(e).

(vii) *Priority group 1—subpriority 7.* An application for construction or acquisition of a nursing home or domiciliary from a State that has a limited need for the beds that the State, in that application, proposes to establish.

Note to paragraph (a)(1): The following chart is intended to provide a graphic aid for understanding priority group 1 and its subpriorities.

BILLING CODE P

Example – Prioritization for Priority Group 1

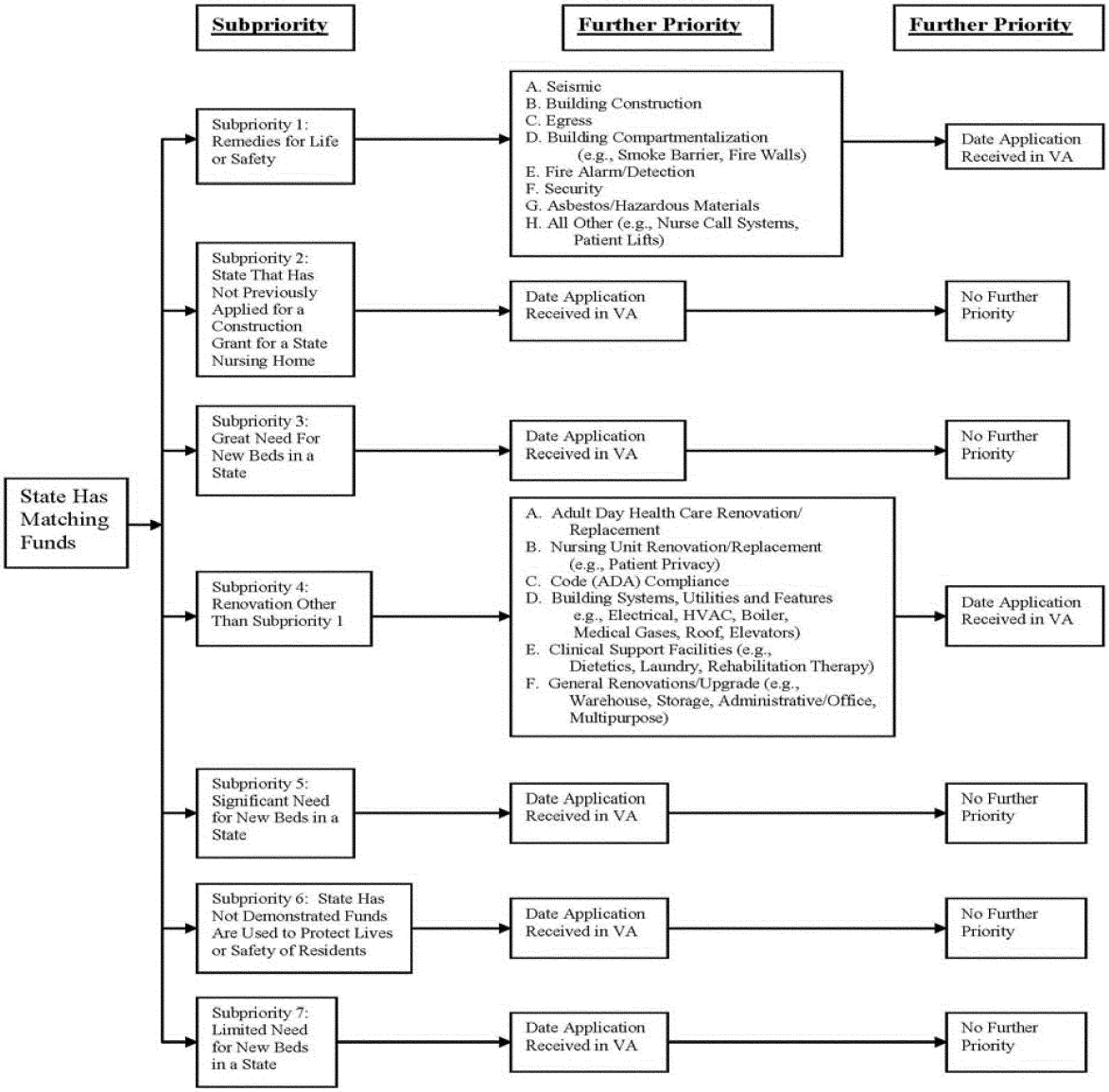

BILLING CODE C

(2) *Priority group 2.* An application not meeting the criteria of paragraph (a)(1) of this section but meeting the criteria of paragraph (a)(1)(i) of this section. Projects within this priority group will be further prioritized the same as in paragraphs (a)(1)(i)(A) through (a)(1)(i)(H) of this section.

(3) *Priority group 3.* An application not meeting the criteria of paragraph (a)(1) of this section but meeting the criteria of paragraph (a)(1)(ii) of this section.

(4) *Priority group 4.* An application not meeting the criteria of paragraph (a)(1) of this section but meeting the criteria of paragraph (a)(1)(iii) of this section.

(5) *Priority group 5.* An application not meeting the criteria of paragraph (a)(1) of this section but meeting the criteria of paragraph (a)(1)(iv) of this section. Projects within this priority group will be further prioritized the same as in paragraphs (a)(1)(iv)(A) through (a)(1)(iv)(F) of this section.

(6) *Priority group 6.* An application not meeting the criteria of paragraph (a)(1) of this section but meeting the criteria of paragraph (a)(1)(v) of this section.

(7) *Priority group 7.* An application not meeting the criteria of paragraph (a)(1) of this section but meeting the criteria of paragraph (a)(1)(vi) of this section.

(8) *Priority group 8.* An application not meeting the criteria of paragraph (a)(1) of this section but meeting the criteria of paragraph (a)(1)(vii) of this section.

* * * * *

(d) Applications in each priority or subpriority group will be further prioritized based on the date the application was received in VA (the earlier the application was received, the higher the priority given). Projects will be prioritized under this paragraph after all prioritization is completed under the projects' priority or subpriority group, as specified in paragraph (a) of this section, and only if necessary to give separate priorities to applications that have the same priority ranking after the prioritization specified in paragraph (a) of this section is accomplished.

(e) If any State home in a State has been cited by a VA safety office, VA engineering office, or other VA office with responsibility for life and safety inspections; a State or local government agency (including a Fire Marshal); or an accrediting institution (including the Joint Commission on Accreditation of Healthcare Organizations) for conditions that threaten the lives or safety of one or more of the residents or program participants in the facility, the State must include in any application submitted under § 59.20 or its updates to such application its plan to address all such citations. If VA determines that the State's plan fails to set forth how it will address such citations in a reasonable period of time, then VA will prioritize all applications of such State as follows:

(1) Applications that meet the criteria of paragraph (a)(1) of this section, but do not meet the criteria of paragraphs (a)(1)(i) or (vii) of this section, will be prioritized in subpriority group 6 of priority group 1 (paragraph (a)(1)(vi) of this section).

(2) Applications not meeting the criteria for placement in priority group 1 (paragraph (a)(1) of this section) and not meeting the criteria of subpriority group 1 of priority group 1 (paragraph (a)(1)(i) of this section) will be prioritized in priority group 7 (paragraph (a)(7) of this section).

* * * * *

(h) Except for applications that must be included in subpriority group 1 of priority group 1, applications for projects with components that could be prioritized in more than one priority group will be placed in the priority group toward which the largest share of the cost of the project is allocated. Once the correct priority group is determined, applications for projects with components that could be prioritized in more than one subpriority group in that priority group will be placed in the subpriority group toward which the largest share of the cost of the project is allocated. For example, if a project for which 25 percent of the funds needed would address seismic issues and 75 percent of the funds needed would be for building construction in a State with a great need for new beds, the project would be placed in subpriority group 3. If the highest-cost component of an application for multiple projects does not meet the criteria for placement in priority group 1, subpriority group 1, because it is estimated to cost $400,000.00 or more, it will be prioritized based on the component with the next largest share of the cost.

* * * * *

[FR Doc. 2013–08366 Filed 4–9–13; 8:45 am]

BILLING CODE P

ENVIRONMENTAL PROTECTION AGENCY

40 CFR Part 180

[EPA–HQ–OPP–2012–0092; FRL–9381–5]

Dinotefuran; Pesticide Tolerances

AGENCY: Environmental Protection Agency (EPA).

ACTION: Final rule.

SUMMARY: This regulation establishes tolerances for residues of dinotefuran in or on all food/feed items (other than those covered by a higher tolerance as a result of use on growing crops) in food/feed handling establishments. BASF Corporation requested these tolerances under the Federal Food, Drug, and Cosmetic Act (FFDCA).

DATES: This regulation is effective April 10, 2013. Objections and requests for hearings must be received on or before June 10, 2013, and must be filed in accordance with the instructions provided in 40 CFR part 178 (see also Unit I.C. of the **SUPPLEMENTARY INFORMATION**).

ADDRESSES: The docket for this action, identified by docket identification (ID) number EPA–HQ–OPP–2012–0092, is available at *http://www.regulations.gov* or at the Office of Pesticide Programs Regulatory Public Docket (OPP Docket) in the Environmental Protection Agency Docket Center (EPA/DC), EPA West Bldg., Rm. 3334, 1301 Constitution Ave. NW., Washington, DC 20460–0001. The Public Reading Room is open from 8:30 a.m. to 4:30 p.m., Monday through Friday, excluding legal holidays. The telephone number for the Public Reading Room is (202) 566–1744, and the telephone number for the OPP Docket is (703) 305–5805. Please review the visitor instructions and additional information about the docket available at *http://www.epa.gov/dockets.*

FOR FURTHER INFORMATION CONTACT: Rita Kumar, Registration Division, Office of Pesticide Programs, Environmental Protection Agency, 1200 Pennsylvania Ave. NW., Washington, DC 20460–0001; telephone number: (703) 308–8291; email address: *kumar.rita@epa.gov.*

SUPPLEMENTARY INFORMATION:

I. General Information

A. Does this action apply to me?

You may be potentially affected by this action if you are an agricultural producer, food manufacturer, or pesticide manufacturer. The following list of North American Industrial Classification System (NAICS) codes is not intended to be exhaustive, but rather

provides a guide to help readers determine whether this document applies to them. Potentially affected entities may include:

- Crop production (NAICS code 111).
- Animal production (NAICS code 112).
- Food manufacturing (NAICS code 311).
- Pesticide manufacturing (NAICS code 32532).

B. How can I get electronic access to other related information?

You may access a frequently updated electronic version of EPA's tolerance regulations at 40 CFR part 180 through the Government Printing Office's e-CFR site at *http://www.ecfr.gov/cgi-bin/text-idx?&c=ecfr&tpl=/ecfrbrowse/Title40/40tab_02.tpl.*

C. How can I file an objection or hearing request?

Under FFDCA section 408(g), 21 U.S.C. 346a, any person may file an objection to any aspect of this regulation and may also request a hearing on those objections. You must file your objection or request a hearing on this regulation in accordance with the instructions provided in 40 CFR part 178. To ensure proper receipt by EPA, you must identify docket ID number EPA–HQ–OPP–2012–0092 in the subject line on the first page of your submission. All objections and requests for a hearing must be in writing, and must be received by the Hearing Clerk on or before June 10, 2013. Addresses for mail and hand delivery of objections and hearing requests are provided in 40 CFR 178.25(b).

In addition to filing an objection or hearing request with the Hearing Clerk as described in 40 CFR part 178, please submit a copy of the filing (excluding any Confidential Business Information (CBI)) for inclusion in the public docket. Information not marked confidential pursuant to 40 CFR part 2 may be disclosed publicly by EPA without prior notice. Submit the non-CBI copy of your objection or hearing request, identified by docket ID number EPA–HQ–OPP–2012–0092, by one of the following methods:

- *Federal eRulemaking Portal: http://www.regulations.gov.* Follow the online instructions for submitting comments. Do not submit electronically any information you consider to be CBI or other information whose disclosure is restricted by statute.
- *Mail:* OPP Docket, Environmental Protection Agency Docket Center (EPA/DC), (28221T), 1200 Pennsylvania Ave. NW., Washington, DC 20460–0001.
- *Hand Delivery:* To make special arrangements for hand delivery or delivery of boxed information, please follow the instructions at *http://www.epa.gov/dockets/contacts.htm.*

Additional instructions on commenting or visiting the docket, along with more information about dockets generally, is available at *http://www.epa.gov/dockets.*

II. Summary of Petitioned-For Tolerance

In the **Federal Register** of May 23, 2012 (77 FR 30481) (FRL–9347–8), EPA issued a document pursuant to FFDCA section 408(d)(3), 21 U.S.C. 346a(d)(3), announcing the filing of a pesticide petition (PP 1F7967) by BASF Corporation, c/o Landis International Inc., P.O. Box 5126, 3185 Madison Highway, Valdosta, GA 31603. The petition requested that 40 CFR 180.603 be amended by establishing tolerances for residues of the insecticide dinotefuran, (*RS*)-1-methyl-2-nitro-3-((tetrahydro-3-furanyl)methyl)guanidine in or on food/feed commodities not covered by a higher tolerance at 0.01 parts per million (ppm). That document referenced a summary of the petition prepared by BASF Corporation, the registrant, which is available in the docket, *http://www.regulations.gov.* There were no comments received in response to the notice of filing.

III. Aggregate Risk Assessment and Determination of Safety

Section 408(b)(2)(A)(i) of FFDCA allows EPA to establish a tolerance (the legal limit for a pesticide chemical residue in or on a food) only if EPA determines that the tolerance is ''safe.'' Section 408(b)(2)(A)(ii) of FFDCA defines ''safe'' to mean that ''there is a reasonable certainty that no harm will result from aggregate exposure to the pesticide chemical residue, including all anticipated dietary exposures and all other exposures for which there is reliable information.'' This includes exposure through drinking water and in residential settings, but does not include occupational exposure. Section 408(b)(2)(C) of FFDCA requires EPA to give special consideration to exposure of infants and children to the pesticide chemical residue in establishing a tolerance and to ''ensure that there is a reasonable certainty that no harm will result to infants and children from aggregate exposure to the pesticide chemical residue. * * *.''

Consistent with FFDCA section 408(b)(2)(D), and the factors specified in FFDCA section 408(b)(2)(D), EPA has reviewed the available scientific data and other relevant information in support of this action. EPA has sufficient data to assess the hazards of and to make a determination on aggregate exposure for dinotefuran including exposure resulting from the tolerances established by this action. EPA's assessment of exposures and risks associated with dinotefuran follows.

A. Toxicological Profile

EPA has evaluated the available toxicity data and considered its validity, completeness, and reliability as well as the relationship of the results of the studies to human risk. EPA has also considered available information concerning the variability of the sensitivities of major identifiable subgroups of consumers, including infants and children.

Dinotefuran has low acute toxicity by oral, dermal, and inhalation exposure routes. It is not a dermal sensitizer, but causes a low level of skin irritation. The main target of toxicity is the nervous system, but effects on the nervous system were only observed at high doses. Nervous system toxicity was manifested as clinical signs and decreased motor activity seen after acute dosing (in both rats and rabbits) and changes in motor activity which are consistent with effects on the nicotinic cholinergic nervous system seen after repeated dosing. Typically, low to moderate levels of neonicotinoids, such as dinotefuran, activate the nicotinic acetylcholine receptors causing stimulation of the peripheral nervous system (PNS). High levels of neonicotinoids can over stimulate the PNS, maintaining cation channels in the open state which blocks the action potential and leads to paralysis.

Dinotefuran was well tolerated at high doses following dietary administration for ninety days to mice, rats, and dogs. The most sensitive effects were decreases in body weight and/or body weight gain, but even these effects occurred at or near the limit dose. Changes in spleen and thymus weights were seen in mice, rats and dogs following subchronic and chronic dietary exposures. However, these weight changes were not corroborated with alterations in hematology parameters, histopathological lesions in these organs, or toxicity to the hematopoietic system. Furthermore, the toxicology data base contains immunotoxicity studies in mice and rats and a developmental immunotoxicity study in rats. In the immunotoxicity studies there were no effects on T-cell dependent antibody response when tested up to the limit dose in male and female mice and in male and female rats. There were no changes in spleen

and thymus weight and there were no histopathological lesions in these organs. In the developmental immunotoxicity study, there was no evidence of an effect on the functionality of the immune system in rats that were exposed to dinotefuran at the limit dose during the prenatal, postnatal, and post-weaning periods. Consequently, the thymus weight changes seen in dogs and the spleen weight changes seen in mice and rats were not considered to be toxicologically relevant.

No systemic or neurotoxicity was seen following repeated dermal applications at the limit dose to rats for 28 days. No systemic or portal of entry effects were seen following repeated inhalation exposure at the maximum obtainable concentrations to rats for 28 days.

In the prenatal studies, no maternal or developmental toxicity was seen at the limit dose in rats. In rabbits, maternal toxicity manifested as clinical signs of neurotoxicity, but no developmental toxicity was seen. In the reproduction study, parental, offspring, and reproductive toxicity was seen at the limit dose. Parental toxicity included decreased body weight gain, transient decrease in food consumption, and decreased thyroid weights. Offspring toxicity was characterized as decreased forelimb grip strength or hindlimb grip strength in the F_1 pups. There was no adverse effect on reproductive performance at any dose. In the developmental neurotoxicity study, no maternal or offspring toxicity was seen at any dose including the limit dose.

There was no evidence of carcinogenicity in male and female mice and in male and female rats fed diets containing dinotefuran at the limit dose for 78 weeks to mice and 104 weeks to rats. Dinotefuran was non-mutagenic in both *in vivo* and *in vitro* assays. Specific information on the studies received and the nature of the adverse effects caused by dinotefuran as well as the no-observed-adverse-effect-level (NOAEL) and the lowest-observed-adverse-effect-level (LOAEL) from the toxicity studies can be found at *http://www.regulations.gov* in document ''Dinotefuran: Human Health Risk Assessment for Proposed Section 3 Uses on Rice and Food/Feed Handling Establishments, and New Horse Spot-On and Total Release Fogger Products'' pages 40–45 in docket ID number EPA–HQ–OPP–2012–0092.

B. Toxicological Points of Departure/Levels of Concern

Once a pesticide's toxicological profile is determined, EPA identifies toxicological points of departure (POD) and levels of concern to use in evaluating the risk posed by human exposure to the pesticide. For hazards that have a threshold below which there is no appreciable risk, the toxicological POD is used as the basis for derivation of reference values for risk assessment. PODs are developed based on a careful analysis of the doses in each toxicological study to determine the dose at which no adverse effects are observed (the NOAEL) and the lowest dose at which adverse effects of concern are identified (the LOAEL). Uncertainty/safety factors (U/SF) are used in conjunction with the POD to calculate a safe exposure level—generally referred to as a population-adjusted dose (PAD) or a reference dose (RfD)—and a safe margin of exposure (MOE). For non-threshold risks, the Agency assumes that any amount of exposure will lead to some degree of risk. Thus, the Agency estimates risk in terms of the probability of an occurrence of the adverse effect expected in a lifetime. For more information on the general principles EPA uses in risk characterization and a complete description of the risk assessment process, see *http://www.epa.gov/pesticides/factsheets/riskassess.htm.*

A summary of the toxicological endpoints for dinotefuran used for human risk assessment is shown in the Table of this unit. The dinotefuran hazard profile was updated in the risk assessment completed on July 20, 2012, and nothing has changed since this update. For a more detailed discussion of the endpoint selection, refer to Appendix A.3 on pp 44–47 in the document titled ''Dinotefuran: Human Health Risk Assessment for Proposed Section 3 Uses on Tuberous and Corm Vegetables Subgroup 1C, Onion Subgroup 3–07A, Onion Subgroup 3–07B, Small Fruit Subgroup 13–07F, Berry Subgroup 13–07H, Peach, and Watercress, And a Tolerance on Imported Tea'' in docket ID number EPA–HQ–OPP–2011–0433.

TABLE—SUMMARY OF TOXICOLOGICAL DOSES AND ENDPOINTS FOR DINOTEFURAN FOR USE IN HUMAN HEALTH RISK ASSESSMENT

Exposure/scenario	Point of Departure and Uncertainty/Safety Factors	RfD, PAD, LOC for risk assessment	Study and toxicological effects
Acute dietary (general population including infants and children).	NOAEL = 125 mg/kg/day. UF_A = 10x UF_H = 10x FQPA SF = 1x	Acute RfD = 1.25 mg/kg/day. aPAD = 1.25 mg/kg/day	Developmental Toxicity Study in Rabbits. LOAEL = 300 mg/kg/day based on clinical signs in does (prone position, panting, tremor and erythema) seen following the first dose on Gestation Day 6.
Chronic dietary (All populations)	NOAEL= 99.7 mg/kg/day. UF_A = 10x UF_H = 10x FQPA SF = 1x	Chronic RfD = 1.0 mg/kg/day. cPAD = 1.0 mg/kg/day	Chronic Toxicity/Carcinogenicity Study in Rats. LOAEL = 991 mg/kg/day based on decreased body weight gain and nephrotoxicity.
Incidental oral short-term (1 to 30 days).	NOAEL= 99.7 mg/kg/day. UF_A = 10x UF_H = 10x FQPA SF = 1x	LOC for MOE = 100	Chronic Toxicity/Carcinogenicity Study in Rats. LOAEL = 991 mg/kg/day based on decreased body weight gain and nephrotoxicity.

FQPA SF = Food Quality Protection Act Safety Factor. LOAEL = lowest-observed-adverse-effect-level. LOC = level of concern. mg/kg/day = milligram/kilogram/day. MOE = margin of exposure. NOAEL = no-observed-adverse-effect-level. PAD = population adjusted dose (a = acute, c = chronic). RfD = reference dose. UF = uncertainty factor. UF_A = extrapolation from animal to human (interspecies). UF_H = potential variation in sensitivity among members of the human population (intraspecies).

C. Exposure Assessment

1. *Dietary exposure from food and feed uses.* In evaluating dietary exposure to dinotefuran, EPA considered exposure under the petitioned-for tolerances as well as all existing dinotefuran tolerances in 40 CFR 180.603. EPA assessed dietary exposures from dinotefuran in food as follows:

i. *Acute exposure.* Quantitative acute dietary exposure and risk assessments are performed for a food-use pesticide, if a toxicological study has indicated the possibility of an effect of concern occurring as a result of a 1-day or single exposure.

Such effects were identified for dinotefuran. In estimating acute dietary exposure, EPA used food consumption information from the United States Department of Agriculture (USDA) under the National Health and Nutrition Examination Survey, What We Eat in America (NHANES/WWEIA). As to residue levels in food, EPA assumed 100 percent crop treated (PCT) and tolerance-level residues for all current crops.

ii. *Chronic exposure.* In conducting the chronic dietary exposure assessment EPA used the food consumption data from the USDA under NHANES/WWEIA. As to residue levels in food, EPA assumed 100 PCT and tolerance-level residues for all current crops.

iii. *Cancer.* Based on the data summarized in Unit III.A., EPA has concluded that dinotefuran does not pose a cancer risk to humans. Therefore, a dietary exposure assessment for the purpose of assessing cancer risk is unnecessary.

iv. *Anticipated residue and percent crop treated (PCT) information.* EPA did not use anticipated residue and/or PCT information in the dietary assessment for dinotefuran. Tolerance level residues and/or 100 PCT were assumed for all food commodities.

2. *Dietary exposure from drinking water.* The Agency used screening level water exposure models in the dietary exposure analysis and risk assessment for dinotefuran in drinking water. These simulation models take into account data on the physical, chemical, and fate/transport characteristics of dinotefuran. Further information regarding EPA drinking water models used in pesticide exposure assessment can be found at *http://www.epa.gov/oppefed1/models/water/index.htm.*

Based on the Tier 1 Rice Model and Screening Concentration in Ground Water (SCI–GROW) models, the estimated drinking water concentrations (EDWCs) of dinotefuran for acute exposures are estimated to be 269 parts per billion (ppb) for surface water and 4.9 ppb for ground water, and for chronic exposures for non-cancer assessments are estimated to be 253–257 ppb, depending upon retention time from 10–30 days, for surface water and 4.9 ppb for ground water.

Modeled estimates of drinking water concentrations were directly entered into the dietary exposure model. For acute dietary risk assessment, the water concentration value of 269 ppb was used to assess the contribution to drinking water. For chronic dietary risk assessment, the water concentration of value 257 ppb was used to assess the contribution to drinking water.

3. *From non-dietary exposure.* The term ''residential exposure'' is used in this document to refer to non-occupational, non-dietary exposure (e.g., for lawn and garden pest control, indoor pest control, termiticides, and flea and tick control on pets. Dinotefuran is currently registered for the following uses that could result in residential exposures: Turf, ornamentals, vegetable gardens, roach and ant bait, pet spot-ons, indoor aerosol sprays, crack and crevice sprays, etc. EPA assessed residential exposure using the following assumptions: Because no dermal or inhalation endpoints were chosen for dinotefuran, post-application residential dermal and inhalation exposure scenarios were not assessed. As a result, risk assessments were only completed for post-application scenarios in which incidental oral exposures are expected. The post-application exposure and risk estimates for all existing residential uses resulted in risk estimates that are not of concern (MOEs ranged from 1,100 to 5,900,000). Further information regarding EPA standard assumptions and generic inputs for residential exposures may be found at *http://www.epa.gov/pesticides/trac/science/trac6a05.pdf.*

4. *Cumulative effects from substances with a common mechanism of toxicity.* Section 408(b)(2)(D)(v) of FFDCA requires that, when considering whether to establish, modify, or revoke a tolerance, the Agency consider ''available information'' concerning the cumulative effects of a particular pesticide's residues and ''other substances that have a common mechanism of toxicity.''

EPA has not found dinotefuran to share a common mechanism of toxicity with any other substances, and dinotefuran does not appear to produce a toxic metabolite produced by other substances. For the purposes of this tolerance action, therefore, EPA has assumed that dinotefuran does not have a common mechanism of toxicity with other substances. For information regarding EPA's efforts to determine which chemicals have a common mechanism of toxicity and to evaluate the cumulative effects of such chemicals, see EPA's Web site at *http://www.epa.gov/pesticides/cumulative.*

D. Safety Factor for Infants and Children

1. *In general.* Section 408(b)(2)(C) of FFDCA provides that EPA shall apply an additional tenfold (10X) margin of safety for infants and children in the case of threshold effects to account for prenatal and postnatal toxicity and the completeness of the database on toxicity and exposure unless EPA determines based on reliable data that a different margin of safety will be safe for infants and children. This additional margin of safety is commonly referred to as the FQPA SF. In applying this provision, EPA either retains the default value of 10X, or uses a different additional safety factor when reliable data available to EPA support the choice of a different factor.

2. *Prenatal and postnatal sensitivity.* In the prenatal studies, no maternal or developmental toxicity was seen at the limit dose in rats. In rabbits, maternal toxicity manifested as clinical signs of neurotoxicity but no developmental toxicity was seen. In the rat reproduction study, parental, offspring, and reproductive toxicity was seen at the limit dose. Parental toxicity included decreased body weight gain, transient decrease in food consumption, and decreased thyroid weights. Offspring toxicity was characterized as decreased forelimb grip strength or hindlimb grip strength in the F_1 pups. There was no adverse effect on reproductive performance at any dose. In the developmental neurotoxicity study, no maternal or offspring toxicity was seen at any dose including the limit dose.

3. *Conclusion.* EPA has determined that reliable data show the safety of infants and children would be adequately protected if the FQPA SF were reduced to 1X. That decision is based on the following findings:

i. The toxicity database for dinotefuran is complete.

ii. The neurotoxic potential of dinotefuran has been adequately considered. Dinotefuran is a neonicotinoid and has a neurotoxic mode of pesticidal action. Consistent with the mode of action, changes in motor activity were seen in repeat-dose studies, including the subchronic

neurotoxicity study. Additionally, decreased grip strength and brain weight were observed in the offspring of a multi-generation reproduction study albeit at doses close to the limit dose. For these reasons, a developmental neurotoxicity (DNT) study was required. The DNT study did not show evidence of a unique sensitivity of the developing nervous system; no effects on neurobehavioral parameters were seen in the offspring at any dose, including the limit dose.

iii. As discussed in Unit III.D.2., there is no evidence that dinotefuran results in increased susceptibility in *in utero* rats or rabbits in the prenatal developmental studies or in young rats in the 2-generation reproduction study.

iv. There are no residual uncertainties identified in the exposure databases. The dietary food exposure assessments were performed based on 100 PCT and tolerance-level residues. EPA made conservative (protective) assumptions in the ground and surface water modeling used to assess exposure to dinotefuran in drinking water. EPA used similarly conservative assumptions to assess post-application exposure of children from incidental oral exposures. These assessments will not underestimate the exposure and risks posed by dinotefuran.

E. Aggregate Risks and Determination of Safety

EPA determines whether acute and chronic dietary pesticide exposures are safe by comparing aggregate exposure estimates to the acute PAD (aPAD) and chronic PAD (cPAD). For linear cancer risks, EPA calculates the lifetime probability of acquiring cancer given the estimated aggregate exposure. Short-, intermediate-, and chronic-term risks are evaluated by comparing the estimated aggregate food, water, and residential exposure to the appropriate PODs to ensure that an adequate MOE exists.

1. *Acute risk.* Using the exposure assumptions discussed in this unit for acute exposure, the acute dietary exposure from food and water to dinotefuran will occupy 7.6% of the aPAD for all infants < 1 year old, the population group receiving the greatest exposure.

2. *Chronic risk.* Using the exposure assumptions described in this unit for chronic exposure, EPA has concluded that chronic exposure to dinotefuran from food and water will utilize 3.9 of the cPAD for children 1–2 years old, the population group receiving the greatest exposure. Based on the explanation in Unit III.C.3., regarding residential use patterns, chronic residential exposure to residues of dinotefuran is not expected.

3. *Short-term risk.* Short-term aggregate exposure takes into account short-term residential exposure plus chronic exposure to food and water (considered to be a background exposure level). Dinotefuran is currently registered for uses that could result in short-term residential exposure, and the Agency has determined that it is appropriate to aggregate chronic exposure through food and water with short-term residential exposures to dinotefuran.

Using the exposure assumptions described in this unit for short-term exposures, EPA has concluded the combined short-term food, water, and residential exposures result in aggregate MOEs of 790. Because EPA's level of concern for dinotefuran is a MOE of 100 or below, these MOEs are not of concern.

4. *Intermediate-term risk.* Intermediate-term aggregate exposure takes into account intermediate-term residential exposure plus chronic exposure to food and water (considered to be a background exposure level). Intermediate-term exposure is not expected for the adult residential exposure pathway. Therefore, the intermediate-term aggregate risk would be equivalent to the chronic dietary exposure estimate. For children, intermediate-term incidental oral exposures could potentially occur from indoor uses. However, while it is possible for children to be exposed for longer durations, the magnitude of residues is expected to be lower due to dissipation or other activities. Since incidental oral short- and intermediate-term toxicity endpoints and points of departure are the same, the short-term aggregate risk estimate, which includes the highest residential exposure estimate (from turf), is protective of any intermediate-term exposures.

5. *Aggregate cancer risk for population.* Based on the lack of evidence of carcinogenicity in two adequate rodent carcinogenicity studies, dinotefuran is not expected to pose a cancer risk to humans.

6. *Determination of safety.* Based on these risk assessments, EPA concludes that there is a reasonable certainty that no harm will result to the general population, or to infants and children from aggregate exposure to dinotefuran residues.

IV. Other Considerations

A. Analytical Enforcement Methodology

Adequate enforcement methodology, a high performance liquid chromatography/tandem mass spectrometry (HPLC/MS/MS method for the determination of residues of dinotefuran, and the metabolites DN, and UF; an HPLC/ultraviolet (UV) detection method for the determination of residues of dinotefuran; and HPLC/MS and HPLC/MS/MS methods for the determination of DN and UF) is available to enforce the tolerance expression.

The method may be requested from: Chief, Analytical Chemistry Branch, Environmental Science Center, 701 Mapes Rd., Ft. Meade, MD 20755–5350; telephone number: (410) 305–2905; email address: *residuemethods@epa.gov.*

B. International Residue Limits

In making its tolerance decisions, EPA seeks to harmonize U.S. tolerances with international standards whenever possible, consistent with U.S. food safety standards and agricultural practices. EPA considers the international maximum residue limits (MRLs) established by the Codex Alimentarius Commission (Codex), as required by FFDCA section 408(b)(4). The Codex Alimentarius is a joint United Nations Food and Agriculture Organization/World Health Organization food standards program, and it is recognized as an international food safety standards-setting organization in trade agreements to which the United States is a party. EPA may establish a tolerance that is different from a Codex MRL; however, FFDCA section 408(b)(4) requires that EPA explain the reasons for departing from the Codex level.

The Codex has not established a MRL for dinotefuran.

V. Conclusion

Therefore, a tolerance of 0.01 ppm is established for residues of dinotefuran, (RS)-1-methyl-2-nitro3-((tetrahydro-3-furanyl)methyl)guanidine, including its metabolites and degradates, in or on all food and/or feed commodities (other than those already covered by a higher tolerance as a result of use on growing crops or inadvertent residues) in food and/or feed handling establishments where food and/or feed products are held, stored, processed, prepared, or served. Compliance with the tolerance level is to be determined by measuring only dinotefuran.

VI. Statutory and Executive Order Reviews

This final rule establishes tolerances under FFDCA section 408(d) in response to a petition submitted to the Agency. The Office of Management and

Budget (OMB) has exempted these types of actions from review under Executive Order 12866, entitled ''Regulatory Planning and Review'' (58 FR 51735, October 4, 1993). Because this final rule has been exempted from review under Executive Order 12866, this final rule is not subject to Executive Order 13211, entitled ''Actions Concerning Regulations That Significantly Affect Energy Supply, Distribution, or Use'' (66 FR 28355, May 22, 2001) or Executive Order 13045, entitled ''Protection of Children from Environmental Health Risks and Safety Risks'' (62 FR 19885, April 23, 1997). This final rule does not contain any information collections subject to OMB approval under the Paperwork Reduction Act (PRA) (44 U.S.C. 3501 *et seq.*), nor does it require any special considerations under Executive Order 12898, entitled ''Federal Actions to Address Environmental Justice in Minority Populations and Low-Income Populations'' (59 FR 7629, February 16, 1994).

Since tolerances and exemptions that are established on the basis of a petition under FFDCA section 408(d), such as the tolerance in this final rule, do not require the issuance of a proposed rule, the requirements of the Regulatory Flexibility Act (RFA) (5 U.S.C. 601 *et seq.*), do not apply.

This final rule directly regulates growers, food processors, food handlers, and food retailers, not States or tribes, nor does this action alter the relationships or distribution of power and responsibilities established by Congress in the preemption provisions of FFDCA section 408(n)(4). As such, the Agency has determined that this action will not have a substantial direct effect on States or tribal governments, on the relationship between the national government and the States or tribal governments, or on the distribution of power and responsibilities among the various levels of government or between the Federal Government and Indian tribes. Thus, the Agency has determined that Executive Order 13132, entitled ''Federalism'' (64 FR 43255, August 10, 1999) and Executive Order 13175, entitled ''Consultation and Coordination with Indian Tribal Governments'' (65 FR 67249, November 9, 2000) do not apply to this final rule. In addition, this final rule does not impose any enforceable duty or contain any unfunded mandate as described under Title II of the Unfunded Mandates Reform Act of 1995 (UMRA) (2 U.S.C. 1501 *et seq.*).

This action does not involve any technical standards that would require Agency consideration of voluntary consensus standards pursuant to section 12(d) of the National Technology Transfer and Advancement Act of 1995 (NTTAA) (15 U.S.C. 272 note).

VII. Congressional Review Act

Pursuant to the Congressional Review Act (5 U.S.C. 801 *et seq.*), EPA will submit a report containing this rule and other required information to the U.S. Senate, the U.S. House of Representatives, and the Comptroller General of the United States prior to publication of the rule in the **Federal Register**. This action is not a ''major rule'' as defined by 5 U.S.C. 804(2).

List of Subjects in 40 CFR Part 180

Environmental protection, Administrative practice and procedure, Agricultural commodities, Pesticides and pests, Reporting and recordkeeping requirements.

Dated: April 2, 2013.

Lois Rossi,

Director, Registration Division, Office of Pesticide Programs.

Therefore, 40 CFR chapter I is amended as follows:

PART 180—[AMENDED]

■ 1. The authority citation for part 180 continues to read as follows:

Authority: 21 U.S.C. 321(q), 346a and 371.

■ 2. Section 180.603 is amended by adding paragraph (a)(3) to read as follows:

§ 180.603 Dinotefuran; tolerances for residues.

(a) * * *

(3) A tolerance of 0.01 parts per million is established for residues of the insecticide dinotefuran, (*RS*)-1-methyl-2-nitro-3-((tetrahydro-3-furanyl)methyl)guanidine, including its metabolites and degradates, in or on all food and/or feed commodities (other than those covered by a higher tolerance as a result of use on growing crops or inadvertent residues) when residues result from application of dinotefuran in food and/or feed handling establishments where food and/or feed products are held, stored, processed, prepared, or served. Compliance with the tolerance level is to be determined by measuring only dinotefuran.

* * * * *

[FR Doc. 2013–08400 Filed 4–9–13; 8:45 am]

BILLING CODE 6560–50–P

DEPARTMENT OF HOMELAND SECURITY

Federal Emergency Management Agency

44 CFR Part 67

[Docket ID FEMA–2013–0002]

Final Flood Elevation Determinations

AGENCY: Federal Emergency Management Agency, DHS.

ACTION: Final rule.

SUMMARY: Base (1% annual-chance) Flood Elevations (BFEs) and modified BFEs are made final for the communities listed below. The BFEs and modified BFEs are the basis for the floodplain management measures that each community is required either to adopt or to show evidence of being already in effect in order to qualify or remain qualified for participation in the National Flood Insurance Program (NFIP).

DATES: The date of issuance of the Flood Insurance Rate Map (FIRM) showing BFEs and modified BFEs for each community. This date may be obtained by contacting the office where the maps are available for inspection as indicated in the table below.

ADDRESSES: The final BFEs for each community are available for inspection at the office of the Chief Executive Officer of each community. The respective addresses are listed in the table below.

FOR FURTHER INFORMATION CONTACT: Luis Rodriguez, Chief, Engineering Management Branch, Federal Insurance and Mitigation Administration, Federal Emergency Management Agency, 500 C Street SW., Washington, DC 20472, (202) 646–4064, or (email) *Luis.Rodriguez3@fema.dhs.gov.*

SUPPLEMENTARY INFORMATION: The Federal Emergency Management Agency (FEMA) makes the final determinations listed below for the modified BFEs for each community listed. These modified elevations have been published in newspapers of local circulation and ninety (90) days have elapsed since that publication. The Deputy Associate Administrator for Mitigation has resolved any appeals resulting from this notification.

This final rule is issued in accordance with section 110 of the Flood Disaster Protection Act of 1973, 42 U.S.C. 4104, and 44 CFR part 67. FEMA has developed criteria for floodplain management in floodprone areas in accordance with 44 CFR part 60.

Interested lessees and owners of real property are encouraged to review the proof Flood Insurance Study and FIRM available at the address cited below for each community.

The BFEs and modified BFEs are made final in the communities listed below. Elevations at selected locations in each community are shown.

National Environmental Policy Act. This final rule is categorically excluded from the requirements of 44 CFR part 10, Environmental Consideration. An environmental impact assessment has not been prepared.

Regulatory Flexibility Act. As flood elevation determinations are not within the scope of the Regulatory Flexibility Act, 5 U.S.C. 601–612, a regulatory flexibility analysis is not required.

Regulatory Classification. This final rule is not a significant regulatory action under the criteria of section 3(f) of Executive Order 12866 of September 30, 1993, Regulatory Planning and Review, 58 FR 51735.

Executive Order 13132, Federalism. This final rule involves no policies that have federalism implications under Executive Order 13132.

Executive Order 12988, Civil Justice Reform. This final rule meets the applicable standards of Executive Order 12988.

List of Subjects in 44 CFR Part 67

Administrative practice and procedure, Flood insurance, Reporting and recordkeeping requirements.

Accordingly, 44 CFR part 67 is amended as follows:

PART 67—[AMENDED]

■ 1. The authority citation for part 67 continues to read as follows:

Authority: 42 U.S.C. 4001 *et seq.;* Reorganization Plan No. 3 of 1978, 3 CFR, 1978 Comp., p. 329; E.O. 12127, 44 FR 19367, 3 CFR, 1979 Comp., p. 376.

§ 67.11 [Amended]

■ 2. The tables published under the authority of § 67.11 are amended as follows:

Flooding source(s)	Location of referenced elevation	* Elevation in feet (NGVD) + Elevation in feet (NAVD) # Depth in feet above ground ∧ Elevation in meters (MSL) modified	Communities affected
Mower County, Minnesota, and Incorporated Areas Docket No.: FEMA–B–1233			
Cedar River	Approximately 1.21 miles upstream of 29th Avenue Southwest (County Highway 28).	+1190	City of Austin.
	At the downstream side of I and M Rail Link	+1205	
Dobbins Creek/North Branch Dobbins Creek.	Approximately 0.76 mile upstream of 21st Street Northeast.	+1205	Unincorporated Areas of Mower County.
	Approximately 0.86 mile upstream of 21st Street Northeast.	+1205	

* National Geodetic Vertical Datum.
+ North American Vertical Datum.
# Depth in feet above ground.
∧ Mean Sea Level, rounded to the nearest 0.1 meter.

ADDRESSES

City of Austin
Maps are available for inspection at City Hall, 500 4th Avenue Northeast, Austin, MN 55912.

Unincorporated Areas of Mower County
Maps are available for inspection at Mower County Government Center, 201 1st Street Northeast, Austin, MN 55912.

(Catalog of Federal Domestic Assistance No. 97.022, ''Flood Insurance.'')

Roy E. Wright,

Deputy Associate Administrator for Mitigation, Department of Homeland Security, Federal Emergency Management Agency.

[FR Doc. 2013–08292 Filed 4–9–13; 8:45 am]

BILLING CODE 9110–12–P

DEPARTMENT OF HOMELAND SECURITY

Federal Emergency Management Agency

44 CFR Part 67

[Docket ID FEMA–2013–0002]

Final Flood Elevation Determinations

AGENCY: Federal Emergency Management Agency, DHS.

ACTION: Final rule.

SUMMARY: Base (1% annual-chance) Flood Elevations (BFEs) and modified BFEs are made final for the communities listed below. The BFEs and modified BFEs are the basis for the floodplain management measures that each community is required either to adopt or to show evidence of being already in effect in order to qualify or remain qualified for participation in the National Flood Insurance Program (NFIP).

DATES: The date of issuance of the Flood Insurance Rate Map (FIRM) showing BFEs and modified BFEs for each community. This date may be obtained by contacting the office where the maps are available for inspection as indicated in the table below.

ADDRESSES: The final BFEs for each community are available for inspection at the office of the Chief Executive

Officer of each community. The respective addresses are listed in the table below.

FOR FURTHER INFORMATION CONTACT: Luis Rodriguez, Chief, Engineering Management Branch, Federal Insurance and Mitigation Administration, Federal Emergency Management Agency, 500 C Street SW., Washington, DC 20472, (202) 646–4064, or (email) *Luis.Rodriguez3@fema.dhs.gov.*

SUPPLEMENTARY INFORMATION: The Federal Emergency Management Agency (FEMA) makes the final determinations listed below for the modified BFEs for each community listed. These modified elevations have been published in newspapers of local circulation and ninety (90) days have elapsed since that publication. The Deputy Associate Administrator for Mitigation has resolved any appeals resulting from this notification.

This final rule is issued in accordance with section 110 of the Flood Disaster Protection Act of 1973, 42 U.S.C. 4104, and 44 CFR part 67. FEMA has developed criteria for floodplain management in floodprone areas in accordance with 44 CFR part 60.

Interested lessees and owners of real property are encouraged to review the proof Flood Insurance Study and FIRM available at the address cited below for each community. The BFEs and modified BFEs are made final in the communities listed below. Elevations at selected locations in each community are shown.

National Environmental Policy Act. This final rule is categorically excluded from the requirements of 44 CFR part 10, Environmental Consideration. An environmental impact assessment has not been prepared.

Regulatory Flexibility Act. As flood elevation determinations are not within the scope of the Regulatory Flexibility Act, 5 U.S.C. 601–612, a regulatory flexibility analysis is not required.

Regulatory Classification. This final rule is not a significant regulatory action under the criteria of section 3(f) of Executive Order 12866 of September 30, 1993, Regulatory Planning and Review, 58 FR 51735.

Executive Order 13132, Federalism. This final rule involves no policies that have federalism implications under Executive Order 13132.

Executive Order 12988, Civil Justice Reform. This final rule meets the applicable standards of Executive Order 12988.

List of Subjects in 44 CFR Part 67

Administrative practice and procedure, Flood insurance, Reporting and recordkeeping requirements.

Accordingly, 44 CFR part 67 is amended as follows:

PART 67—[AMENDED]

■ 1. The authority citation for part 67 continues to read as follows:

Authority: 42 U.S.C. 4001 *et seq.;* Reorganization Plan No. 3 of 1978, 3 CFR, 1978 Comp., p. 329; E.O. 12127, 44 FR 19367, 3 CFR, 1979 Comp., p. 376.

§ 67.11 [Amended]

■ 2. The tables published under the authority of § 67.11 are amended as follows:

Flooding source(s)	Location of referenced elevation	* Elevation in feet (NGVD) + Elevation in feet (NAVD) # Depth in feet above ground − Elevation in meters (MSL) Modified	Communities affected
Arlington County., Virginia Docket No.: FEMA–B–1117			
Four Mile Run	At the confluence with the Potomac River	+10	Arlington County.
	Just downstream of Jefferson Davis Memorial Highway (U.S. Route 1).	+11	
Pimmit Run (Backwater effects from Potomac River).	From the confluence with the Potomac River to a point located approximately 112 feet downstream of Chain Bridge Road.	+40	Arlington County.
Potomac River	At the confluence with Four Mile Run	+10	Arlington County.
	Approximately 0.39 mile upstream of Chain Bridge Road	+41	

* National Geodetic Vertical Datum.
+ North American Vertical Datum.
# Depth in feet above ground.
− Mean Sea Level, rounded to the nearest 0.1 meter.

ADDRESSES

Arlington County.
Maps are available for inspection at the Arlington County Government Building, 2100 Clarendon Boulevard, Arlington, VA 22021.

(Catalog of Federal Domestic Assistance No. 97.022, ''Flood Insurance.'')

Roy E. Wright,

Deputy Associate Administrator for Mitigation, Department of Homeland Security, Federal Emergency Management Agency.

[FR Doc. 2013–08293 Filed 4–9–13; 8:45 am]

BILLING CODE 9110–12–P

Proposed Rules

Federal Register
Vol. 78, No. 69
Wednesday, April 10, 2013

This section of the FEDERAL REGISTER contains notices to the public of the proposed issuance of rules and regulations. The purpose of these notices is to give interested persons an opportunity to participate in the rule making prior to the adoption of the final rules.

NUCLEAR REGULATORY COMMISSION

10 CFR Parts 50 and 52

[NRC–2011–0299]

RIN 3150–AJ08

Station Blackout Mitigation Strategies

AGENCY: Nuclear Regulatory Commission.

ACTION: Draft regulatory basis and draft rule concepts; request for comment.

SUMMARY: The U.S. Nuclear Regulatory Commission (NRC) is requesting comment on the draft regulatory basis document to support the potential amendment of its regulations concerning nuclear power plant licensees' station blackout mitigation strategies. Appendix A of the draft regulatory basis provides a discussion of rule language concepts that the NRC staff is considering for this potential rulemaking. In addition, Appendix A contains a set of questions soliciting stakeholder feedback in areas that would support the NRC staff in developing a proposed rule. The issuance of this draft regulatory basis document is one of the actions stemming from the NRC's lessons-learned efforts associated with the March 2011 Fukushima Dai-ichi Nuclear Power Plant accident in Japan.

DATES: Submit comments by May 28, 2013. Comments received after this date will be considered if it is practical to do so, but the NRC is only able to ensure consideration of comments received on or before this date.

ADDRESSES: You may submit comments by any of the following methods:

- *Federal Rulemaking Web Site:* Go to *http://www.regulations.gov* and search for Docket ID NRC–2011–0299. Address questions about NRC dockets to Carol Gallagher; telephone: 301–492–3668; email: *Carol.Gallagher@nrc.gov.* For technical questions, contact the individual listed in the **FOR FURTHER INFORMATION CONTACT** section of this document.
- *Email comments to: Rulemaking.Comments@nrc.gov.* If you do not receive an automatic email reply confirming receipt, contact us directly at 301–415–1677.
- *Fax comments to:* Secretary, U.S. Nuclear Regulatory Commission at 301–415–1101.
- *Mail comments to:* Secretary, U.S. Nuclear Regulatory Commission, Washington, DC 20555–0001, ATTN: Rulemakings and Adjudications Staff.
- *Hand deliver comments to:* 11555 Rockville Pike, Rockville, Maryland 20852, between 7:30 a.m. and 4:15 p.m. (Eastern time) Federal workdays; telephone: 301–415–1677.

For additional direction on accessing information and submitting comments, see ''Accessing Information and Submitting Comments'' in the **SUPPLEMENTARY INFORMATION** section of this document.

FOR FURTHER INFORMATION CONTACT: Timothy A. Reed, Office of Nuclear Reactor Regulation, U.S. Nuclear Regulatory Commission, Washington, DC 20555–0001; telephone: 301–415–1462; email: *Timothy.Reed@nrc.gov.*

SUPPLEMENTARY INFORMATION:

I. Accessing Information and Submitting Comments

A. Accessing Information

Please refer to Docket ID NRC–2011–0299 when contacting the NRC about the availability of information for this notice. You may access information related to this document, which the NRC possesses and is publicly available, by the following methods:

- *Federal Rulemaking Web site:* Go to *http://www.regulations.gov* and search for Docket ID NRC–2011–0299.
- *NRC's Agencywide Documents Access and Management System (ADAMS):* You may access publicly available documents online in the NRC Library at *http://www.nrc.gov/reading-rm/adams.html.* To begin the search, select ''ADAMS Public Documents'' and then select ''*Begin Web-based ADAMS Search.''* For problems with ADAMS, please contact the NRC's Public Document Room (PDR) reference staff at 1–800–397–4209, 301–415–4737, or by email to *PDR.Resource@nrc.gov.* The ADAMS Accession Number for each document referenced in this notice (if that document is available in ADAMS) is provided the first time that a document is referenced.
- *NRC's PDR:* You may examine and purchase copies of public documents at the NRC's PDR, Room O1–F21, One White Flint North, 11555 Rockville Pike, Rockville, Maryland 20852.

B. Submitting Comments

Please include Docket ID NRC–2011–0299 in the subject line of your comment submission to ensure that the NRC is able to make your comment submission available to the public in this docket.

The NRC cautions you not to include identifying or contact information in comment submissions that you do not want to be publicly disclosed in your comment submission. The NRC will post all comment submissions at *www.regulations.gov* as well as enter the comment submissions into ADAMS, and the NRC does not routinely edit comment submissions to remove identifying or contact information.

If you are requesting or aggregating comments from other persons for submission to the NRC, then you should inform those persons not to include identifying or contact information that they do not want to be publicly disclosed in their comment submission. Your request should state that the NRC does not routinely edit comment submissions to remove such information before making the comment submissions available to the public or entering the comment into ADAMS.

II. Background

As the NRC continues its ongoing proposed rulemaking effort to amend portions of parts 50 and 52 of Title 10 of the *Code of Federal Regulations* (10 CFR) to incorporate requirements involving station blackout mitigation strategies, the NRC is making preliminary documents publicly available on the Federal rulemaking Web site, *www.regulations.gov*, under Docket ID NRC–2011–0299. By making these documents publicly available, the NRC seeks to inform stakeholders of the current status of the NRC's rulemaking development activities and to provide preparatory material for future public meetings. The NRC is instituting a 45-day public comment period on these materials, and the public is encouraged to participate in any related public meetings.

III. Publicly Available Documents

The NRC has posted on *www.regulations.gov* for public availability the draft regulatory basis to incorporate requirements involving station blackout mitigation strategies (ADAMS Accession No. ML13077A453). The draft regulatory basis documents the reasons why the NRC determined that rulemaking is the appropriate course of action to remedy a regulatory shortcoming.

In addition, in Appendix A, the draft regulatory basis provides a discussion of rule language concepts that the NRC staff is considering for this potential rulemaking. Appendix A also contains a set of questions soliciting stakeholder feedback in areas that would support the NRC staff in developing a proposed rule. The draft rule concepts provide the NRC's current thoughts about what requirements would be needed. The draft rule concepts do not represent a final NRC staff position nor have they been reviewed by the Commission. These concepts may undergo significant revision during the rulemaking process.

The NRC is requesting formal public comments on the draft regulatory basis and the draft rule concepts. The NRC may post additional materials to the Federal rulemaking Web site at *www.regulations.gov* under Docket ID NRC–2011–0299. The Federal rulemaking Web site allows you to receive alerts when changes or additions occur in a docket folder. To subscribe:

(1) Navigate to the docket folder (NRC–2011–0299); (2) click the ''Email Alert'' link; and (3) enter your email address and select how frequently you would like to receive emails (daily, weekly, or monthly).

Dated at Rockville, Maryland, this 2nd day of April, 2013.

For the Nuclear Regulatory Commission.

Lawrence E. Kokajko,

Director, Division of Policy and Rulemaking, Office of Nuclear Reactor Regulation.

[FR Doc. 2013–08216 Filed 4–9–13; 8:45 am]

BILLING CODE 7590–01–P

DEPARTMENT OF TRANSPORTATION

Federal Aviation Administration

14 CFR Part 39

[Docket No. FAA–2013–0301; Directorate Identifier 2013–NM–025–AD]

RIN 2120–AA64

Airworthiness Directives; The Boeing Company Airplanes

AGENCY: Federal Aviation Administration (FAA), DOT.

ACTION: Notice of proposed rulemaking (NPRM).

SUMMARY: We propose to adopt a new airworthiness directive (AD) for certain The Boeing Company Model 767–200, –300, –300F, and –400ER series airplanes. This proposed AD was prompted by reports of cracked and corroded nuts on an outboard flap support rib. This proposed AD would require, for certain airplanes, repetitive inspections of the cap seal for damaged sealant on nuts common to certain outboard flap support ribs, related investigative and corrective actions if necessary, and replacement of all fasteners in the support ribs, which terminates the repetitive inspections. For certain other airplanes, this proposed AD would require repetitive inspections of the cap seal for damaged sealant on nuts common to certain outboard flap support ribs, related investigative and corrective actions if necessary, and if necessary, a detailed inspection to determine the nut type installed in the outboard flap support rib and corrective actions; for these airplanes, this proposed AD provides optional replacement of all fasteners in the support ribs, which would terminate the repetitive inspections. We are proposing this AD to detect and correct cracked and corroded nuts and bolts and the installation of incorrect nuts on certain outboard flap support ribs, which could lead to additional nut and bolt damage in the joint, and result in loss of an outboard flap, and adversely affect continued safe flight and landing of the airplane.

DATES: We must receive comments on this proposed AD by May 28, 2013.

ADDRESSES: You may send comments, using the procedures found in 14 CFR 11.43 and 11.45, by any of the following methods:

- *Federal eRulemaking Portal:* Go to *http://www.regulations.gov.* Follow the instructions for submitting comments.
- *Fax:* 202–493–2251.
- *Mail:* U.S. Department of Transportation, Docket Operations, M–30, West Building Ground Floor, Room W12–140, 1200 New Jersey Avenue SE., Washington, DC 20590.
- *Hand Delivery:* Deliver to Mail address above between 9 a.m. and 5 p.m., Monday through Friday, except Federal holidays.

For Boeing service information identified in this proposed AD, contact Boeing Commercial Airplanes, Attention: Data & Services Management, P.O. Box 3707, MC 2H–65, Seattle, WA 98124–2207; telephone 206–544–5000, extension 1; fax 206–766–5680; Internet *https://www.myboeingfleet.com.* You may review copies of the referenced service information at the FAA, Transport Airplane Directorate, 1601 Lind Avenue SW., Renton, Washington. For information on the availability of this material at the FAA, call 425–227–1221.

Examining the AD Docket

You may examine the AD docket on the Internet at *http://www.regulations.gov*; or in person at the Docket Management Facility between 9 a.m. and 5 p.m., Monday through Friday, except Federal holidays. The AD docket contains this proposed AD, the regulatory evaluation, any comments received, and other information. The street address for the Docket Office (phone: 800–647–5527) is in the **ADDRESSES** section. Comments will be available in the AD docket shortly after receipt.

FOR FURTHER INFORMATION CONTACT: Berhane Alazar, Aerospace Engineer, Airframe Branch, ANM–120S, FAA, Seattle Aircraft Certification Office, 1601 Lind Avenue SW., Renton, Washington 98057–3356; phone: 425–917–6577; fax: 425–917–6590; email: *berhane.alazar@faa.gov.*

SUPPLEMENTARY INFORMATION:

Comments Invited

We invite you to send any written relevant data, views, or arguments about this proposal. Send your comments to an address listed under the **ADDRESSES** section. Include ''Docket No. FAA–2013–0301; Directorate Identifier 2013–NM–025–AD'' at the beginning of your comments. We specifically invite comments on the overall regulatory, economic, environmental, and energy aspects of this proposed AD. We will consider all comments received by the closing date and may amend this proposed AD because of those comments.

We will post all comments we receive, without change, to *http://www.regulations.gov*, including any personal information you provide. We will also post a report summarizing each substantive verbal contact we receive about this proposed AD.

Discussion

We received reports that two cracked and corroded nuts were found on support rib number 2 of an outboard flap. It was determined that incorrect nuts were installed on support rib numbers 2 and 7. The correct nuts for this installation have part number (P/N) BACN10HR12 and a torque of 3,300 to 4,300 inch-pounds (in-lbs). The installed incorrect nuts have P/N

NAS1804–12 and a torque of 2,400 to 3,500 in-lbs. The installed P/N NAS1804–12 nuts might have been over-torqued. Over-torqued nuts are at risk of fracture. Fractured nuts could create a breach in the cap seal and allow moisture to contact the nuts, resulting in corrosion. Nut fractures could lead to additional nut or bolt fractures within that support rib, and these additional fractures could cause the joint to be compromised. We are proposing this AD to detect and correct cracked and corroded nuts and bolts and the installation of incorrect nuts on certain outboard flap support ribs, which could lead to additional nut and bolt damage in the joint, and result in loss of an outboard flap, and adversely affect continued safe flight and landing of the airplane.

Relevant Service Information

We reviewed Boeing Alert Service Bulletin 767–57A0131, dated October 30, 2012. For information on the procedures and compliance times, see this service information at *http://www.regulations.gov* by searching for Docket No. FAA–2013–0301.

FAA's Determination

We are proposing this AD because we evaluated all the relevant information and determined the unsafe condition described previously is likely to exist or develop in other products of the same type design.

Proposed AD Requirements

This proposed AD would require accomplishing the actions specified in the service information described previously.

The phrase ''related investigative actions'' might be used in this proposed AD. ''Related investigative actions'' are follow-on actions that (1) are related to the primary action, and (2) are actions that further investigate the nature of any condition found. Related investigative actions in an AD could include, for example, inspections.

In addition, the phrase ''corrective actions'' might be used in this proposed AD. ''Corrective actions'' are actions that correct or address any condition found. Corrective actions in an AD could include, for example, repairs.

Costs of Compliance

We estimate that this proposed AD affects 440 airplanes of U.S. registry.

We estimate the following costs to comply with this proposed AD:

ESTIMATED COSTS

Action	Labor cost	Parts cost	Cost per product	Cost on U.S. operators
Detailed inspections	1 work-hour × $85 per hour = $85	$0	$85	$37,400
Replacement of all fasteners (Group 1 airplanes).	2 work-hours × $85 per hour = $170	2,553	2,723	1,198,120

We estimate the following costs to do any necessary related investigative and corrective actions and detailed inspections for nut type that would be required based on the results of the proposed inspections. We have no way of determining the number of aircraft that might need these actions.

ON-CONDITION COSTS

Action	Labor cost	Parts cost	Cost per product
Related investigative and corrective actions and detailed inspection for nut type.	Up to 3 work-hours × $85 per hour = $255	$2,553	Up to $2,808

According to the manufacturer, some of the costs of this proposed AD may be covered under warranty, thereby reducing the cost impact on affected individuals. We do not control warranty coverage for affected individuals. As a result, we have included all costs in our cost estimate.

Authority for This Rulemaking

Title 49 of the United States Code specifies the FAA's authority to issue rules on aviation safety. Subtitle I, section 106, describes the authority of the FAA Administrator. Subtitle VII: Aviation Programs, describes in more detail the scope of the Agency's authority.

We are issuing this rulemaking under the authority described in Subtitle VII, Part A, Subpart III, Section 44701: ''General requirements.'' Under that section, Congress charges the FAA with promoting safe flight of civil aircraft in air commerce by prescribing regulations for practices, methods, and procedures the Administrator finds necessary for safety in air commerce. This regulation is within the scope of that authority because it addresses an unsafe condition that is likely to exist or develop on products identified in this rulemaking action.

Regulatory Findings

We determined that this proposed AD would not have federalism implications under Executive Order 13132. This proposed AD would not have a substantial direct effect on the States, on the relationship between the national Government and the States, or on the distribution of power and responsibilities among the various levels of government.

For the reasons discussed above, I certify this proposed regulation:

(1) Is not a ''significant regulatory action'' under Executive Order 12866,

(2) Is not a ''significant rule'' under the DOT Regulatory Policies and Procedures (44 FR 11034, February 26, 1979),

(3) Will not affect intrastate aviation in Alaska, and

(4) Will not have a significant economic impact, positive or negative, on a substantial number of small entities under the criteria of the Regulatory Flexibility Act.

List of Subjects in 14 CFR Part 39

Air transportation, Aircraft, Aviation safety, Incorporation by reference, Safety.

The Proposed Amendment

Accordingly, under the authority delegated to me by the Administrator, the FAA proposes to amend 14 CFR part 39 as follows:

PART 39—AIRWORTHINESS DIRECTIVES

■ 1. The authority citation for part 39 continues to read as follows:

Authority: 49 U.S.C. 106(g), 40113, 44701.

§ 39.13 [Amended]

■ 2. The FAA amends § 39.13 by adding the following new airworthiness directive (AD):

The Boeing Company: Docket No. FAA–2013–0301; Directorate Identifier 2013–NM–025–AD.

(a) Comments Due Date

We must receive comments by May 28, 2013.

(b) Affected ADs

None.

(c) Applicability

This AD applies to The Boeing Company Model 767–200, 767–300, 767–300F, and 767–400ER series airplanes; certificated in any category; as identified in Boeing Alert Service Bulletin 767–57A0131, dated October 30, 2012.

(d) Subject

Joint Aircraft System Component (JASC)/Air Transport Association (ATA) of America Code 57, Wings.

(e) Unsafe Condition

This AD was prompted by reports of cracked and corroded nuts on an outboard flap support rib. We are issuing this AD to detect and correct cracked and corroded nuts and bolts and the installation of incorrect nuts on certain outboard flap support ribs, which could lead to additional nut and bolt damage in the joint, and result in loss of an outboard flap, and adversely affect continued safe flight and landing of the airplane.

(f) Compliance

Comply with this AD within the compliance times specified, unless already done.

(g) For Group 1 Airplanes: Repetitive Inspections of the Support Ribs, Related Investigative and Corrective Actions, and Fastener Replacement

For Group 1 airplanes, as specified in Boeing Alert Service Bulletin 767–57A0131, dated October 30, 2012: Except as required by paragraph (j) of this AD, at the time specified in table 1 of paragraph 1.E., ''Compliance,'' of Boeing Alert Service Bulletin 767–57A0131, dated October 30, 2012: Do a detailed inspection of the cap seal for damaged sealant on the nuts common to outboard flap support rib numbers 1, 2, 7, and 8, and do all applicable related investigative and corrective actions, in accordance with the Accomplishment Instructions of Boeing Alert Service Bulletin 767–57A0131, dated October 30, 2012. Do all applicable related investigative and corrective actions before further flight, except as specified in paragraphs (g)(1)(ii) and (g)(2)(ii) of this AD.

(1) If, during any detailed inspection of the cap seal required by paragraph (g) of this AD, no damaged sealant is found on any support rib, do the actions specified in paragraphs (g)(1)(i) and (g)(1)(ii) of this AD.

(i) Repeat the detailed inspection of the cap seal on that support rib thereafter at the intervals specified in table 1 of paragraph 1.E., ''Compliance,'' of Boeing Alert Service Bulletin 767–57A0131, dated October 30, 2012, until all fasteners are replaced within that support rib as required by paragraph (g)(1)(ii) of this AD.

(ii) Except as required by paragraph (j) of this AD, at the time specified in table 1 of paragraph 1.E., ''Compliance,'' of Boeing Alert Service Bulletin 767–57A0131, dated October 30, 2012: Replace all fasteners within the support rib in accordance with the Accomplishment Instructions of Boeing Alert Service Bulletin 767–57A0131, dated October 30, 2012.

(2) If, during any related investigative action required by paragraph (g) of this AD, no cracking and no corrosion is found on the nut, bolt, and washers of any support rib, do the actions specified in paragraphs (g)(2)(i) and (g)(2)(ii) of this AD.

(i) Repeat the detailed inspection of the cap seal on that support rib thereafter at the intervals specified in table 1 of paragraph 1.E., ''Compliance,'' of Boeing Alert Service Bulletin 767–57A0131, dated October 30, 2012, until all fasteners are replaced within that support rib as required by paragraph (g)(2)(ii) of this AD.

(ii) Except as required by paragraph (j) of this AD, at the time specified in table 1 of paragraph 1.E., ''Compliance,'' of Boeing Alert Service Bulletin 767–57A0131, dated October 30, 2012: Replace all fasteners within the support rib in accordance with the Accomplishment Instructions of Boeing Alert Service Bulletin 767–57A0131, dated October 30, 2012.

(h) For Group 2 and 3 Airplanes: Repetitive Inspections of the Support Ribs, Related Investigative and Corrective Actions, and Fastener Replacement

For Group 2 and 3 airplanes, as specified in Boeing Alert Service Bulletin 767–57A0131, dated October 30, 2012: Except as required by paragraph (j) of this AD, at the time specified in table 2 of paragraph 1.E., ''Compliance,'' of Boeing Alert Service Bulletin 767–57A0131, dated October 30, 2012: Do a detailed inspection of the cap seal for damaged sealant on the nuts common to outboard flap support rib numbers 1, 2, 7, and 8, and do all applicable related investigative and corrective actions, in accordance with the Accomplishment Instructions of Boeing Alert Service Bulletin 767–57A0131, dated October 30, 2012. Do all applicable related investigative and corrective actions before further flight.

(1) If, during any detailed inspection of the cap seal required by paragraph (h) of this AD, no damaged sealant is found on any support rib, do the actions specified in paragraphs (h)(1)(i) and (h)(1)(ii) of this AD.

(i) Repeat the detailed inspection of the cap seal on that support rib thereafter at the intervals specified in table 1 of paragraph 1.E., ''Compliance,'' of Boeing Alert Service Bulletin 767–57A0131, dated October 30, 2012, until the actions required by paragraph (h)(1)(ii) of this AD are done or until all fasteners are replaced within that support rib as specified in paragraph (i) of this AD.

(ii) Except as required by paragraph (j) of this AD, at the time specified in table 2 of paragraph 1.E., ''Compliance,'' of Boeing Alert Service Bulletin 767–57A0131, dated October 30, 2012: Do a detailed inspection to determine the nut type installed in the outboard flap support rib and do all applicable corrective actions, in accordance with the Accomplishment Instructions of Boeing Alert Service Bulletin 767–57A0131, dated October 30, 2012. Do all applicable corrective actions before further flight.

(2) If, during any related investigative action required by paragraph (h) of this AD, no cracking and no corrosion is found on the nut, bolt, and washers of any support rib, do the actions specified in paragraphs (h)(2)(i) and (h)(2)(ii) of this AD.

(i) Repeat the detailed inspection of the cap seal on that support rib thereafter at the intervals specified in table 2 of paragraph 1.E., ''Compliance,'' of Boeing Alert Service Bulletin 767–57A0131, dated October 30, 2012, until the actions required by paragraph (h)(2)(ii) of this AD are done or until all fasteners are replaced within that support rib as specified in paragraph (i) of this AD.

(ii) Except as required by paragraph (j) of this AD, at the time specified in table 2 of paragraph 1.E., ''Compliance,'' of Boeing Alert Service Bulletin 767–57A0131, dated October 30, 2012: Do a detailed inspection to determine the nut type installed in the outboard flap support rib and do all applicable corrective actions, in accordance with the Accomplishment Instructions of Boeing Alert Service Bulletin 767–57A0131, dated October 30, 2012. Do all applicable corrective actions before further flight.

(i) Replacement of all Fasteners Within Outboard Flap Support Ribs 1, 2, 7, and 8

Replacing all fasteners within outboard flap support rib number 1, 2, 7, or 8, in accordance with the Accomplishment Instructions of Boeing Alert Service Bulletin 767–57A0131, dated October 30, 2012, terminates the inspections required by paragraphs (g) and (h) of this AD for that support rib only.

(j) Exception to Service Information

Where Boeing Alert Service Bulletin 767–57A0131, dated October 30, 2012, specifies a compliance time relative to the issue date of that service bulletin, this AD requires compliance within the specified compliance time after the effective date of this AD.

(k) Alternative Methods of Compliance (AMOCs)

(1) The Manager, Seattle Aircraft Certification Office (ACO), FAA, has the authority to approve AMOCs for this AD, if requested using the procedures found in 14 CFR 39.19. In accordance with 14 CFR 39.19, send your request to your principal inspector or local Flight Standards District Office, as appropriate. If sending information directly to the manager of the ACO, send it to the attention of the person identified in the Related Information section of this AD.

Information may be emailed to: *9-ANM-Seattle-ACO-AMOC-Requests@faa.gov.*

(2) Before using any approved AMOC, notify your appropriate principal inspector, or lacking a principal inspector, the manager of the local flight standards district office/certificate holding district office.

(3) An AMOC that provides an acceptable level of safety may be used for any repair required by this AD if it is approved by the Boeing Commercial Airplanes Organization Designation Authorization (ODA) that has been authorized by the Manager, Seattle ACO, to make those findings. For a repair method to be approved, the repair must meet the certification basis of the airplane, and the approval must specifically refer to this AD.

(l) Related Information

(1) For more information about this AD, contact Berhane Alazar, Aerospace Engineer, Airframe Branch, ANM–120S, FAA, Seattle Aircraft Certification Office, 1601 Lind Avenue SW., Renton, Washington 98057–3356; phone: 425–917–6577; fax: 425–917–6590; email: *berhane.alazar@faa.gov.*

(2) For Boeing service information identified in this AD, contact Boeing Commercial Airplanes, Attention: Data & Services Management, P.O. Box 3707, MC 2H–65, Seattle, WA 98124–2207; telephone 206–544–5000, extension 1; fax 206–766–5680; Internet *https://www.myboeingfleet.com.* You may also review copies of the referenced service information at the FAA, Transport Airplane Directorate, 1601 Lind Avenue SW., Renton, Washington. For information on the availability of this material at the FAA, call 425–227–1221.

Issued in Renton, Washington, on March 28, 2013.

Ali Bahrami,

Manager, Transport Airplane Directorate, Aircraft Certification Service.

[FR Doc. 2013–08342 Filed 4–9–13; 8:45 am]

BILLING CODE 4910–13–P

DEPARTMENT OF TRANSPORTATION

Federal Aviation Administration

14 CFR Part 39

[Docket No. FAA–2013–0302; Directorate Identifier 2013–NM–019–AD]

RIN 2120–AA64

Airworthiness Directives; The Boeing Company Airplanes

AGENCY: Federal Aviation Administration (FAA), DOT.

ACTION: Notice of proposed rulemaking (NPRM).

SUMMARY: We propose to supersede an existing airworthiness directive (AD) that applies to certain The Boeing Company Model 737–100 and –200 series airplanes. The existing AD currently requires replacement of certain underwing fuel tank access covers with stronger, fire-resistant covers. Since we issued that AD, we received reports of standard access doors installed where impact resistant access doors are required and reports of impact resistant doors without stencils. This proposed AD would require inspecting fuel tank access doors to determine that impact resistant access doors are installed in the correct locations, inspecting application of stencils and index markers of impact resistant access doors, corrective actions if necessary, revising the maintenance program, and adding airplanes to the applicability. We are proposing this AD to prevent foreign object penetration of the wing tank, which could lead to a fuel leak near ignition sources (engine, hot brakes), consequently leading to a fuel-fed fire.

DATES: We must receive comments on this proposed AD by May 28, 2013.

ADDRESSES: You may send comments, using the procedures found in 14 CFR 11.43 and 11.45, by any of the following methods:

- *Federal eRulemaking Portal:* Go to *http://www.regulations.gov.* Follow the instructions for submitting comments.
- *Fax:* 202–493–2251.
- *Mail:* U.S. Department of Transportation, Docket Operations, M–30, West Building Ground Floor, Room W12–140, 1200 New Jersey Avenue SE., Washington, DC 20590.
- *Hand Delivery:* Deliver to Mail address above between 9 a.m. and 5 p.m., Monday through Friday, except Federal holidays.

For service information identified in this proposed AD, contact Boeing Commercial Airplanes, Attention: Data & Services Management, P. O. Box 3707, MC 2H–65, Seattle, WA 98124–2207; telephone 206–544–5000, extension 1; fax 206–766–5680; Internet *https://www.myboeingfleet.com.* You may review copies of the referenced service information at the FAA, Transport Airplane Directorate, 1601 Lind Avenue SW., Renton, Washington. For information on the availability of this material at the FAA, call 425–227–1221.

Examining the AD Docket

You may examine the AD docket on the Internet at *http://www.regulations.gov*; or in person at the Docket Management Facility between 9 a.m. and 5 p.m., Monday through Friday, except Federal holidays. The AD docket contains this proposed AD, the regulatory evaluation, any comments received, and other information. The street address for the Docket Office (phone: 800–647–5527) is in the **ADDRESSES** section. Comments will be available in the AD docket shortly after receipt.

FOR FURTHER INFORMATION CONTACT: Suzanne Lucier, Aerospace Engineer, Propulsion Branch, ANM–140S, FAA, Seattle Aircraft Certification Office, 1601 Lind Avenue SW., Renton, Washington 98057–3356; phone: 425–917–6438; fax: 425–917–6590; email: *suzanne.lucier@faa.gov.*

SUPPLEMENTARY INFORMATION:

Comments Invited

We invite you to send any written relevant data, views, or arguments about this proposed AD. Send your comments to an address listed under the **ADDRESSES** section. Include ''Docket No. FAA–2013–0302; Directorate Identifier 2013–NM–019–AD'' at the beginning of your comments. We specifically invite comments on the overall regulatory, economic, environmental, and energy aspects of this proposed AD. We will consider all comments received by the closing date and may amend this proposed AD because of those comments.

We will post all comments we receive, without change, to *http://www.regulations.gov*, including any personal information you provide. We will also post a report summarizing each substantive verbal contact we receive about this proposed AD.

Discussion

On December 29, 1986, we issued AD 87–02–07, Amendment 39–5506 (Docket No. 86–NM–175–AD; 52 FR 518–01, January 7, 1987), for certain Model 737–100 and 737–200 series airplanes. That AD requires replacement of certain underwing fuel tank access covers with stronger, fire-resistant covers. That AD resulted from an incident of cover penetration, which resulted in a fire and total loss of the airplane. We issued that AD to prevent foreign object penetration of the wing tank, which could lead to a fuel leak near ignition sources (engine, hot brakes), consequently leading to a fuel-fed fire.

Actions Since Existing AD Was Issued

Since we issued AD 87–02–07, Amendment 39–5506 (Docket No. 86–NM–175–AD; 52 FR 518–01, January 7, 1987), we received reports of standard access doors installed where impact resistant access doors are required and reports of impact resistant doors without stencils.

Relevant Service Information

We reviewed Boeing Service Bulletin 737–28–1286, dated January 10, 2012.

The service information describes procedures for inspecting stencils and index markers of impact resistance access doors and corrective action if necessary. For information on the procedures and compliance times, see this service information at *http://www.regulations.gov* by searching for Docket No. FAA–2013–0302.

FAA's Determination

We are proposing this AD because we evaluated all the relevant information and determined the unsafe condition described previously is likely to exist or develop in other products of these same type designs.

Proposed AD Requirements

This proposed AD would retain none of the requirements of AD 87–02–07, Amendment 39–5506 (Docket No. 86–NM–175–AD; 52 FR 518–01, January 7, 1987). Since that AD was issued, the FAA issued section 121.316 of the Federal Aviation Regulations (14 CFR 121.316) requiring that each turbine powered transport category airplane meet the requirements of section 25.963(e) of the Federal Aviation Regulations (14 CFR 25.963(e)). Section 25.963(e) outlines the certification requirements for fuel tank access covers on turbine powered transport category airplanes.

This proposed AD would require inspecting fuel tank access doors to determine that impact resistant access doors are installed in the correct locations, inspecting application of stencils and index markers of impact resistant access doors, corrective actions if necessary, and revising the maintenance program. This proposed AD also would add Model 737–200C and 737–300 series airplanes to the applicability, since these models are similar in design to Model 737–100 and –200 series airplanes.

This proposed AD requires revisions to certain operator maintenance documents to include a new critical design configuration control limitation (CDCCL). Compliance with CDCCLs is required by section 91.403(c) of the Federal Aviation Regulations (14 CFR 91.403(c)). For airplanes that have been previously modified, altered, or repaired in the areas addressed by this proposed AD, the operator might not be able to accomplish the actions described in the revisions. In this situation, to comply with 14 CFR 91.403(c), the operator must request approval for an alternative method of compliance according to the procedures specified in paragraph (j) of this proposed AD. The request should include a description of changes to the required actions that will ensure the continued damage tolerance of the affected structure.

The phrase ''related investigative actions'' might be used in this proposed AD. ''Related investigative actions'' are follow-on actions that: (1) are related to the primary actions, and (2) are actions that further investigate the nature of any condition found. Related investigative actions in an AD could include, for example, inspections.

In addition, the phrase ''corrective actions'' might be used in this proposed AD. ''Corrective actions'' are actions that correct or address any condition found. Corrective actions in an AD could include, for example, repairs.

Costs of Compliance

We estimate that this proposed AD affects 128 airplanes of U.S. registry.

We estimate the following costs to comply with this proposed AD:

ESTIMATED COSTS

Action	Labor cost	Parts cost	Cost per product	Cost on U.S. operators
Inspect, replace, and apply stencil and index marker.	8 work-hours × $85 per hour = $680	$0	$85	$87,040
Revise airworthiness limitations	1 work-hour × $85 per hour = $85	0	85	10,880

Authority for This Rulemaking

Title 49 of the United States Code specifies the FAA's authority to issue rules on aviation safety. Subtitle I, Section 106, describes the authority of the FAA Administrator. Subtitle VII, Aviation Programs, describes in more detail the scope of the Agency's authority.

We are issuing this rulemaking under the authority described in Subtitle VII, Part A, Subpart III, Section 44701, ''General requirements.'' Under that section, Congress charges the FAA with promoting safe flight of civil aircraft in air commerce by prescribing regulations for practices, methods, and procedures the Administrator finds necessary for safety in air commerce. This regulation is within the scope of that authority because it addresses an unsafe condition that is likely to exist or develop on products identified in this rulemaking action.

Regulatory Findings

We have determined that this proposed AD would not have federalism implications under Executive Order 13132. This proposed AD would not have a substantial direct effect on the States, on the relationship between the national Government and the States, or on the distribution of power and responsibilities among the various levels of government.

For the reasons discussed above, I certify that the proposed regulation:

(1) Is not a ''significant regulatory action'' under Executive Order 12866,

(2) Is not a ''significant rule'' under the DOT Regulatory Policies and Procedures (44 FR 11034, February 26, 1979),

(3) Will not affect intrastate aviation in Alaska, and

(4) Will not have a significant economic impact, positive or negative, on a substantial number of small entities under the criteria of the Regulatory Flexibility Act.

List of Subjects in 14 CFR Part 39

Air transportation, Aircraft, Aviation safety, Incorporation by reference, Safety.

The Proposed Amendment

Accordingly, under the authority delegated to me by the Administrator, the FAA proposes to amend 14 CFR part 39 as follows:

PART 39—AIRWORTHINESS DIRECTIVES

■ 1. The authority citation for part 39 continues to read as follows:

Authority: 49 U.S.C. 106(g), 40113, 44701.

§ 39.13 [Amended]

■ 2. The FAA amends § 39.13 by removing airworthiness directive (AD) 87–02–07, Amendment 39–5506 (Docket No. 86–NM–175–AD; 52 FR 518–01, January 7, 1987), and adding the following new AD:

The Boeing Company: Docket No. FAA–2013–0302; Directorate Identifier 2013–NM–019–AD.

(a) Comments Due Date

The FAA must receive comments on this AD action by May 28, 2013.

(b) Affected ADs

This AD supersedes AD 87–02–07, Amendment 39–5506 (Docket No. 86–NM–175–AD; 52 FR 518–01, January 7, 1987).

(c) Applicability

This AD applies to The Boeing Company Model 737–100, –200, –200C, and –300 series airplanes, certified in any category, as identified in Boeing Service Bulletin 737–28–1286, dated January 10, 2012.

(d) Subject

Joint Aircraft System Component (JASC)/Air Transport Association (ATA) of America Code 28, Fuel.

(e) Unsafe Condition

This AD was prompted by reports of standard access doors installed where impact resistant access doors are required and reports of impact resistant doors without stencils. We are issuing this AD to prevent foreign object penetration of the wing tank, which could lead to a fuel leak near ignition sources (engine, hot brakes), consequently leading to a fuel-fed fire.

(f) Compliance

Comply with this AD within the compliance times specified, unless already done.

(g) Inspection and Corrective Actions

Within 72 months after the effective date of this AD, do a general visual inspection of the left-wing and right-wing fuel tank access doors to determine that impact resistant access doors are installed in the correct locations, and an inspection for proper application of stencils and index markers of impact resistance access doors; and do all applicable corrective actions; in accordance with the Accomplishment Instructions of Boeing Service Bulletin 737–28–1286, dated January 10, 2012. Do all applicable corrective actions before further flight.

(h) Maintenance Program Revision

Within 60 days after the effective date of this AD, revise the maintenance program to incorporate airworthiness limitation (AWL) 57–AWL–01, as specified in Section C, Airworthiness Limitations (AWLs)—Fuel Systems, of the Boeing 737–100/200/200C/300/400/500 Airworthiness Limitations (AWLs) and Certification Maintenance Requirements (CMRs), D6–38278–CMR, dated August 2012.

(i) No Alternative Critical Design Configuration Control Limitations (CDCCLs)

After accomplishing the revision required by paragraph (h) of this AD, no alternative CDCCLs may be used unless the CDCCLs are approved as an alternative method of compliance (AMOC) in accordance with the procedures specified in paragraph (j) of this AD.

(j) Alternative Methods of Compliance (AMOCs)

(1) The Manager, Seattle Aircraft Certification Office (ACO), FAA, has the authority to approve AMOCs for this AD, if requested using the procedures found in 14 CFR 39.19. In accordance with 14 CFR 39.19, send your request to your principal inspector or local Flight Standards District Office, as appropriate. If sending information directly to the manager of the ACO, send it to the attention of the person identified in the Related Information section of this AD. Information may be emailed to: *9-ANM-Seattle-ACO-AMOC-Requests@faa.gov.*

(2) Before using any approved AMOC, notify your appropriate principal inspector, or lacking a principal inspector, the manager of the local flight standards district office/certificate holding district office.

(3) An AMOC that provides an acceptable level of safety may be used for any repair required by this AD if it is approved by the Boeing Commercial Airplanes Organization Designation Authorization (ODA) that has been authorized by the Manager, Seattle ACO to make those findings. For a repair method to be approved, the repair must meet the certification basis of the airplane and the approval must specifically refer to this AD.

(k) Related Information

(1) For more information about this AD, contact Suzanne Lucier, Aerospace Engineer, Propulsion Branch, ANM–140S, FAA, Seattle Aircraft Certification Office, 1601 Lind Avenue SW., Renton, Washington 98057–3356; phone: 425–917–6438; fax: 425–917–6590; email: *suzanne.lucier@faa.gov.*

(2) For service information identified in this AD, contact Boeing Commercial Airplanes, Attention: Data & Services Management, P.O. Box 3707, MC 2H–65, Seattle, WA 98124–2207; telephone 206–544–5000, extension 1; fax 206–766–5680; Internet *https://www.myboeingfleet.com.* You may review copies of the referenced service information at the FAA, Transport Airplane Directorate, 1601 Lind Avenue SW., Renton, Washington. For information on the availability of this material at the FAA, call 425–227–1221.

Issued in Renton, Washington, on March 28, 2013.

Ali Bahrami,

Manager, Transport Airplane Directorate, Aircraft Certification Service.

[FR Doc. 2013–08335 Filed 4–9–13; 8:45 am]

BILLING CODE 4910–13–P

ENVIRONMENTAL PROTECTION AGENCY

40 CFR Part 52

[EPA–R07–OAR–2013–0208; FRL–9800–5]

Approval and Promulgation of Implementation Plans; State of Missouri; Infrastructure SIP Requirements for the 1997 and 2006 Fine Particulate Matter National Ambient Air Quality Standards

AGENCY: Environmental Protection Agency (EPA).

ACTION: Proposed rule.

SUMMARY: EPA is proposing action on four Missouri State Implementation Plan (SIP) submissions. First, EPA is proposing to approve portions of two SIP submissions from the State of Missouri addressing the applicable requirements of Clean Air Act (CAA) for the 1997 and 2006 National Ambient Air Quality Standards (NAAQS) for fine particulate matter ($PM_{2.5}$). The CAA requires that each state adopt and submit a SIP to support implementation, maintenance, and enforcement of each new or revised NAAQS promulgated by EPA. These SIPs are commonly referred to as ''infrastructure'' SIPs. The infrastructure requirements are designed to ensure that the structural components of each state's air quality management program are adequate to meet the state's responsibilities under the CAA. EPA is also proposing to approve two additional SIP submissions from Missouri, one addressing the Prevention of Significant Deterioration (PSD) program in Missouri, and another addressing the requirements applicable to any board or body which approves permits or enforcement orders of the CAA, both of which support requirements associated with infrastructure SIPs.

DATES: Comments must be received on or before May 10, 2013.

ADDRESSES: Submit your comments, identified by Docket ID No. EPA–R07–OAR–2013–0208, by one of the following methods:

1. *http://www.regulations.gov.* Follow the on-line instructions for submitting comments.

2. *Email: bhesania.amy@epa.gov.*

3. *Mail:* Ms. Amy Bhesania, Air Planning and Development Branch, U.S. Environmental Protection Agency, Region 7, Air and Waste Management Division, 11201 Renner Boulevard, Lenexa, Kansas 66219.

4. *Hand Delivery or Courier:* Deliver your comments to Ms. Amy Bhesania, Air Planning and Development Branch,

U.S. Environmental Protection Agency, Region 7, Air and Waste Management Division, 11201 Renner Boulevard, Lenexa, Kansas 66219.

Instructions: Direct your comments to Docket ID No. EPA–R07–OAR–2013–0208. EPA's policy is that all comments received will be included in the public docket without change and may be made available online at *http://www.regulations.gov,* including any personal information provided, unless the comment includes information claimed to be Confidential Business Information (CBI) or other information whose disclosure is restricted by statute. Do not submit through *http://www.regulations.gov* or email information that you consider to be CBI or otherwise protected. The *http://www.regulations.gov* Web site is an ''anonymous access'' system, which means EPA will not know your identity or contact information unless you provide it in the body of your comment. If you send an email comment directly to EPA without going through *http://www.regulations.gov,* your email address will be automatically captured and included as part of the comment that is placed in the public docket and made available on the Internet. If you submit an electronic comment, EPA recommends that you include your name and other contact information in the body of your comment and with any disk or CD–ROM you submit. If EPA cannot read your comment due to technical difficulties and cannot contact you for clarification, EPA may not be able to consider your comment. Electronic files should avoid the use of special characters, any form of encryption, and should be free of any defects or viruses.

Docket: All documents in the electronic docket are listed in the *http://www.regulations.gov* index. Although listed in the index, some information is not publicly available, i.e., CBI or other information whose disclosure is restricted by statute. Certain other material, such as copyrighted material, will be publicly available only in hard copy. Publicly available docket materials are available either electronically at *http://www.regulations.gov* or in hard copy at U.S. Environmental Protection Agency, Region 7, 11201 Renner Boulevard, Lenexa, Kansas 66219 from 8:00 a.m. to 4:30 p.m., Monday through Friday, excluding legal holidays. The interested persons wanting to examine these documents should make an appointment with the office at least 24 hours in advance.

FOR FURTHER INFORMATION CONTACT: Ms. Amy Bhesania, Air Planning and Development Branch, U.S. Environmental Protection Agency, Region 7, 11201 Renner Boulevard, Lenexa, KS 66219; *telephone number:* (913) 551–7147; *fax number:* (913) 551–7065; *email address: bhesania.amy@epa.gov.*

SUPPLEMENTARY INFORMATION: Throughout this document whenever ''we,'' ''us,'' or ''our'' is used, we refer to EPA. This section provides additional information by addressing the following questions:

I. What is being addressed in this document?
II. What is a section 110(a)(1) and (2) infrastructure SIP?
III. What elements are applicable under sections 110(a)(1) and (2)?
IV. What is the scope of this rulemaking as it relates to infrastructure SIPs?
V. What is EPA's evaluation of how the state addressed the relevant elements of sections 110(a)(1) and (2)?
VI. What are the requirements of the $PM_{2.5}$ PSD Increment-SILs-SMC Rule for PSD SIP Programs?
VII. How Does the September 5, 2012 Missouri PSD submission satisfy the $PM_{2.5}$ PSD Increment-SILs-SMC rule?
VIII. What are the additional provisions of the September 5, 2012 SIP submission that EPA is proposing to take action on?
IX. What action is EPA proposing?
X. Statutory and Executive Order Review

I. What is being addressed in this document?

In today's proposed rulemaking, EPA is proposing action on four Missouri SIP submissions. EPA received the first submission on February 27, 2007, addressing the infrastructure SIP requirements relating to the 1997 $PM_{2.5}$ NAAQS. EPA received the second submission on December 28, 2009, addressing the infrastructure SIP requirements relating to the 2006 $PM_{2.5}$ NAAQS. In a previous action EPA approved section 110(a)(2)(D)(i)(I) and (II)—Interstate and international transport requirements of Missouri's February 27, 2007, SIP submission for the 1997 $PM_{2.5}$ NAAQS (72 FR 25975, May 8, 2007); and EPA disapproved section 110(a)(2)(D)(i)(I)—Interstate and international transport requirements of Missouri's December 28, 2009, SIP submission for the 2006 $PM_{2.5}$ NAAQS (76 FR 43156, July 20, 2011). Therefore, in today's action, we are not proposing to act on these portions since they have already been acted upon by EPA. If EPA takes final action as proposed, we will have acted on both the February 27, 2007, and the December 28, 2009, submissions in their entirety excluding those provisions that are not within the scope of today's rulemaking as identified in section IV for both the 1997 and 2006 $PM_{2.5}$ infrastructure SIP submissions.

The third submission was received by EPA on September 5, 2012. This submission revises Missouri's rule in Title 10, Division 10, Chapter 6.060 of the Code of State Regulations (CSR) (10 CSR 10–6.060) ''Construction Permits Required'' to implement certain elements of the ''Prevention of Significant Deterioration (PSD) for Particulate Matter Less Than 2.5 Micrometers ($PM_{2.5}$)—Increments, Significant Impact Levels (SILs) and Significant Monitoring Concentration (SMC)'' rule (75 FR 64864, October 20, 2010). In addition, this rule amendment defers the application of PSD permitting requirements to carbon dioxide emissions from bioenergy and other biogenic stationary sources.

EPA received the fourth submission on August 8, 2012. This submission addresses the conflict of interest provisions in section 128 of the CAA as it relates to infrastructure SIPs described in element E below.

II. What is a section 110(a)(1) and (2) infrastructure SIP?

Section 110(a)(1) of the CAA requires, in part, that states make a SIP submission to EPA to implement, maintain and enforce each of the NAAQS promulgated by EPA after reasonable notice and public hearings. Section 110(a)(2) includes a list of specific elements that such infrastructure SIP submissions must address. SIPs meeting the requirements of sections 110(a)(1) and (2) are to be submitted by states within three years after promulgation of a new or revised NAAQS. These SIPs submissions are commonly referred to as ''infrastructure'' SIPs.

III. What elements are applicable under sections 110(a)(1) and (2)?

On October 2, 2007, EPA issued guidance to address infrastructure SIP elements required under sections 110(a)(1) and (2) for the 1997 8-hour ozone and $PM_{2.5}$ NAAQS.[1] On September 25, 2009, EPA issued guidance to address infrastructure SIP elements required under sections 110(a)(1) and (2) for the 2006 24-hour $PM_{2.5}$ NAAQS.[2] EPA will address these

[1] William T. Harnett, Director, Air Quality Policy Division, Office of Air Quality Planning and Standards, ''Guidance on SIP Elements Required Under Sections 110(a)(1) and (2) for the 1997 8-hour Ozone and $PM_{2.5}$ National Ambient Air Quality Standards,'' Memorandum to EPA Air Division Directors, Regions I–X, October 2, 2007 (2007 Memo).

[2] William T. Harnett, Director, Air Quality Policy Division, Office of Air Quality Planning and

elements below under the following headings: (A) Emission limits and other control measures; (B) Ambient air quality monitoring/data system; (C) Program for enforcement of control measures (PSD, New Source Review for nonattainment areas, and construction and modification of all stationary sources); (D) Interstate and international transport [3]; (E) Adequate authority, resources, implementation, and oversight; (F) Stationary source monitoring system; (G) Emergency authority; (H) Future SIP revisions; (I) Nonattainment areas; (J) Consultation with government officials, public notification, prevention of significant deterioration (PSD), and visibility protection; (K) Air quality and modeling/data; (L) Permitting fees; and (M) Consultation/participation by affected local entities.

IV. What is the scope of this rulemaking as it relates to infrastructure SIPs?

The applicable infrastructure SIP requirements are contained in sections 110(a)(1) and (2) of the CAA. EPA is proposing action on each of the requirements of section 110(a)(2)(A) through section 110(a)(2)(M), as applicable, except for the elements detailed in the following paragraphs.

This rulemaking will not cover four substantive issues that are not integral to acting on a state's infrastructure SIP submission: (i) Existing provisions related to excess emissions during periods of start-up, shutdown, or malfunction at sources, that may be contrary to the CAA and EPA's policies addressing such excess emissions (''SSM''); (ii) existing provisions related to ''director's variance'' or ''director's discretion'' that purport to permit revisions to SIP approved emissions limits with limited public process or without requiring further approval by EPA, that may be contrary to the CAA (''director's discretion''); (iii) existing provisions for minor source New Source Review (NSR) programs that may be inconsistent with the requirements of the CAA and EPA's regulations that pertain to such programs (''minor source NSR''); and, (iv) existing provisions for PSD programs that may be inconsistent with current requirements of EPA's December 31, 2002, ''Final NSR Improvement Rule'' (67 FR 80186), as amended by the ''NSR Reform'' final rulemaking on June 13, 2007 (72 FR 32526). Instead, EPA has indicated that it has other authority to address any such existing SIP defects in other rulemakings, as appropriate. A detailed rationale for why these four substantive issues are not part of the scope of infrastructure SIP rulemakings can be found at 76 FR 41075, 41076–41079 (July 13, 2011). *See also* 77 FR 38239, 38240–38243 (June 27, 2012); and 77 FR 46361, 46362–46365 (August 3, 2012).

In addition to the four substantive areas above, EPA is not acting in this action on section 110(a)(2)(I)—Nonattainment Area Plan or Plan Revisions Under Part D and on the visibility protection portion of section 110(a)(2)(J). A detailed rationale for not acting on elements of these requirements is discussed within each applicable section of this rulemaking. As described above in section I, EPA is also not acting on portions of section 110(a)(2)(D)(i)—Interstate and international transport as final actions have already been taken on portions of this element for both the Missouri 1997 and 2006 $PM_{2.5}$ infrastructure SIP submissions.

Finally, as part of this action, EPA is evaluating the state's compliance with the new PSD requirements promulgated in the ''Implementation of New Source Review (NSR) Program for Particulate Matter Less Than 2.5 Micrometers ($PM_{2.5}$).'' (73 FR 28321, May 16, 2008) and the $PM_{2.5}$ Increment, SILs and SMC rule (75 FR 64864, October 20, 2010). Regarding the May 16, 2008 rule, on January 4, 2013, the U.S. Court of Appeals in the District of Columbia, in *Natural Resources Defense Council* v. *EPA,* 706 F.3d 428 (D.C. Cir.), issued a judgment that remanded two of EPA's rules implementing the 1997 $PM_{2.5}$ NAAQS, including the 2008 rule. The Court ordered EPA to ''repromulgate these rules pursuant to Subpart 4 consistent with this opinion.'' *Id.* at 437. Subpart 4 of part D, Title 1 of the CAA establishes additional provisions for particulate matter nonattainment areas. The 2008 implementation rule addressed by the Court's decision promulgated NSR requirements for implementation of $PM_{2.5}$ in both nonattainment areas (nonattainment NSR) and attainment/unclassifiable areas (PSD). As the requirements of subpart 4 only pertain to nonattainment areas, EPA does not consider the portions of the 2008 rule that address requirements for $PM_{2.5}$ attainment and unclassifiable areas to be affected by the Court's opinion. Moreover, EPA does not anticipate the need to revise any PSD requirements promulgated in the 2008 rule in order to comply with the Court's decision. Accordingly, EPA's approval of Missouri's infrastructure SIP as to Elements (C), (D)(i)(II), and (J), with respect to the PSD requirements promulgated by the 2008 implementation rule, does not conflict with the Court's opinion.

The Court's decision with respect to the nonattainment NSR requirements promulgated by the 2008 implementation rule also does not affect EPA's action on the present infrastructure SIP submission. As described above, EPA interprets the Act to exclude nonattainment area requirements, including requirements associated with a nonattainment NSR program, from infrastructure SIP submissions due three years after adoption or revision of a NAAQS. Instead, these elements are typically referred to as nonattainment SIP or attainment plan elements, which states must submit by the dates statutorily prescribed under part D within subparts 2 through 5, extending as far as ten years following designations for some elements. Given these separate applicable SIP submission dates, EPA concludes that these specific requirements are outside the scope of the infrastructure SIPs.

V. What is EPA's evaluation of how the state addressed the relevant elements of sections 110(a)(1) and (2)?

On July 18, 1997, EPA promulgated new $PM_{2.5}$ primary and secondary NAAQS (62 FR 38652). On October 17, 2006, EPA made further revisions to the primary and secondary NAAQS for $PM_{2.5}$ (71 FR 61144). On February 27, 2007, EPA Region 7 received Missouri's infrastructure SIP submission for the 1997 $PM_{2.5}$ standard. EPA determined this SIP submission complete on March 27, 2007. On December 28, 2009, EPA Region 7 received Missouri's infrastructure SIP submission for the 2006 $PM_{2.5}$ standard. This SIP submission became complete as a matter of law on June 28, 2010. EPA has reviewed both of Missouri's infrastructure SIP submissions and the relevant statutory and regulatory authorities and provisions referenced in those submissions or referenced in Missouri's SIP.

(A) Emission limits and other control measures: Section 110(a)(2)(A) requires SIPs to include enforceable emission limits and other control measures, means or techniques, schedules for compliance and other related matters as

Standards, ''Guidance on SIP Elements Required Under Sections 110(a)(1) and (2) for the 2006 24-Hour Fine Particle ($PM_{2.5}$) National Ambient Air Quality Standards (NAAQS),'' Memorandum to EPA Regional Air Division Directors, Regions I–X, September 25, 2009 (2009 Memo).

[3] Section 110(a)(2)(D)(i) includes four requirements referred to as prongs 1 through 4. Prongs 1 and 2 are provided at section 110(a)(2)(D)(i)(I); Prongs 3 and 4 are provided at section 110(a)(2)(D)(i)(II).

needed to implement, maintain and enforce each NAAQS.[4]

The State of Missouri's Air Conservation Law and Air Pollution Control Rules authorize the Missouri Department of Natural Resources (MDNR) to regulate air quality and implement air quality control regulations. Specifically, Missouri Revised Statutes (RsMO) section 643.030 authorizes the ''Air Conservation Commission of the State of Missouri'' (MACC) to control air pollution, which is defined in RsMO section 643.020 to include air contaminants in quantities, of characteristics and of a duration which cause or contribute to injury to human, plant, or animal life or health or to property. RsMO section 643.050 authorizes the MACC to classify and identify air contaminants.

Missouri's rule 10 CSR 10–6.010 ''Ambient Air Quality Standards'' adopts the 1997 $PM_{2.5}$ annual standard and the 2006 $PM_{2.5}$ 24-hour standard as promulgated by EPA. In addition, 10 CSR 10–6.040 ''Reference Methods'' incorporates by reference the relevant appendices in 40 CFR part 50 for measuring and calculating the concentration of $PM_{2.5}$ in the atmosphere to determine whether the standards have been met. Therefore, $PM_{2.5}$ is an air contaminant which may be regulated under Missouri law.

RsMO section 643.050 of the Air Conservation Law authorizes the MACC, among other things, to regulate the use of equipment known to be a source of air contamination and to establish emissions limitations for air contaminant sources. Missouri also establishes timetables for compliance in its rules, as appropriate. Appendix A of the state's infrastructure SIP submission for both the 1997 $PM_{2.5}$ NAAQS and the 2006 $PM_{2.5}$ NAAQS contains a link to the Missouri Air Conservation Law and Appendix B of each submission contains a link to Missouri's state rules.

Based upon review of the state's infrastructure SIP submissions for the 1997 and 2006 $PM_{2.5}$ NAAQS, and relevant statutory and regulatory authorities and provisions referenced in those submissions or referenced in Missouri's SIP, EPA believes that Missouri has statutory and regulatory authority to establish additional emissions limitations and other measures, as necessary to address attainment and maintenance of the $PM_{2.5}$ standards. Therefore, EPA believes that the Missouri SIP adequately addresses the requirements of section 110(a)(2)(A) for the 1997 and 2006 $PM_{2.5}$ NAAQS [5] and is proposing to approve the February 27, 2007, submission regarding the 1997 $PM_{2.5}$ infrastructure SIP requirements and the December 28, 2009, submission regarding the 2006 $PM_{2.5}$ infrastructure SIP requirements for this element.

(B) Ambient air quality monitoring/data system: Section 110(a)(2)(B) requires SIPs to include provisions to provide for establishment and operation of ambient air quality monitors, collection and analysis of ambient air quality data, and making these data available to EPA upon request.

To address this element, RsMO section 643.050 of the Air Conservation Law provides the enabling authority necessary for Missouri to fulfill the requirements of section 110(a)(2)(B). The Air Pollution Control Program and Air Quality Analysis Section, within MDNR, implement these requirements. Along with their other duties, the monitoring program collects air monitoring data, quality assures the results, and reports the data.

MDNR submits annual monitoring network plans to EPA for approval, including its $PM_{2.5}$ monitoring network, as required by 40 CFR 58.10. Prior to submissions to EPA, Missouri makes the plans available for public review on MDNR's Web site at (*http://www.dnr.mo.gov/env/apcp/monitoring/monitoringnetworkplan.pdf*). MDNR also conducts five-year monitoring network assessments, including the $PM_{2.5}$ monitoring network, as required by 40 CFR 58.10(d). On January 10, 2013, EPA approved Missouri's 2012 Ambient Air Quality Monitoring Plan and on October 27, 2010, EPA approved Missouri's Five-Year Air Monitoring Network Assessment. Missouri 10 CSR 10–6.040(4)(L) ''Reference Methods'' requires that ambient concentrations of $PM_{2.5}$ be measured in accordance with the applicable Federal regulations in 40 CFR part 50, Appendix L, or an equivalent method as approved by EPA pursuant to 40 CFR part 53. Furthermore, Missouri submits air quality data to EPA's Air Quality System (AQS) system in a timely manner, pursuant to the provisions of the state's grant work plans developed in conjunction with EPA.

Based upon review of the state's infrastructure SIP submissions for the 1997 and 2006 $PM_{2.5}$ NAAQS, and relevant statutory and regulatory authorities and provisions referenced in those submissions or referenced in Missouri's SIP, EPA believes that the Missouri SIP meets the requirements of section 110(a)(2)(B) for the 1997 and 2006 24-hour $PM_{2.5}$ NAAQS and is proposing to approve the February 27, 2007, submission regarding the 1997 $PM_{2.5}$ infrastructure SIP requirements and the December 28, 2009, submission regarding the 2006 $PM_{2.5}$ infrastructure SIP requirements for this element.

(C) Program for enforcement of control measures (PSD, New Source Review for nonattainment areas, and construction and modification of all stationary sources): Section 110(a)(2)(C) requires states to include the following three elements in the SIP: (1) A program providing for enforcement of all SIP measures described in section 110(a)(2)(A); (2) a program for the regulation of the modification and construction of stationary sources as necessary to protect the applicable NAAQS (i.e., state-wide permitting of minor sources); and (3) a permit program to meet the major source permitting requirements of the CAA (for areas designated as attainment or unclassifiable for the NAAQS in question).[6]

(1) *Enforcement of SIP Measures.* With respect to enforcement of requirements of the SIP, the Missouri statutes provide authority for MDNR to enforce the requirements of the Air Conservation Law, and any regulations, permits, or final compliance orders issued under the provisions of that law. For example, RsMO section 643.080 of the Air Conservation Law authorizes MDNR to issue compliance orders for violations of the Air Conservation Law, rules promulgated thereunder (which includes rules comprising the Missouri SIP), and conditions of any permits (which includes permits under SIP-approved permitting programs). RsMO section 643.085 authorizes MDNR to assess administrative penalties for violations of the statute, regulations, permit conditions, or administrative orders. RsMO section 643.151 authorizes the MACC to initiate civil

[4] The specific nonattainment area plan requirements of section 110(a)(2)(I) are subject to the timing requirements of section 172, not the timing requirement of section 110(a)(1). Thus, section 110(a)(2)(A) does not require that states submit regulations or emissions limits specifically for attaining the 1997 or 2006 $PM_{2.5}$ NAAQS. Those SIP provisions are due as part of each state's attainment plan, and will be addressed separately from the requirements of section 110(a)(2)(A). In the context of an infrastructure SIP, EPA is not evaluating the existing SIP provisions for this purpose. Instead, EPA is only evaluating whether the state's SIP has basic structural provisions for the implementation of the NAAQS.

[5] For the reasons stated earlier, EPA is not addressing SSM and director's discretion provisions in this rulemaking.

[6] As discussed in further detail below, this infrastructure SIP rulemaking will not address the Missouri program for nonattainment area related provisions, since EPA considers evaluation of these provisions to be outside the scope of infrastructure SIP actions.

actions for these violations, and to seek penalties and injunctive relief to prevent any further violation. RsMO section 643.191 provides for criminal penalties for known violations of the statute, standards, permit conditions, or regulations promulgated thereunder.

(2) *Minor New Source Review.* Section 110(a)(2)(C) also requires that the SIP include measures to regulate construction and modification of stationary sources to protect the NAAQS. With respect to smaller state-wide minor sources (Missouri's major source permitting program is discussed in (3) below), Missouri has a SIP-approved program under rule 10 CSR 10–6.060 ''Construction Permits Required'' to review such sources to ensure, among other requirements, that new and modified sources will not interfere with NAAQS attainment. The state rule contains two general categories of sources subject to the minor source permitting program. The first category is ''de minimis'' sources (regulated at 10 CSR 10–6.060(5))—sources that are not exempted or excluded by rule 10 CSR 10–6.061 ''Construction Permit Exemptions'' or are permitted under rule 10 CSR 10–6.062 ''Construction Permits By Rule'' and emit below specified levels defined at 10 CSR 10–6.020(3)(A) ''Definitions and Common Reference Tables.'' Permits for these sources may only be issued if any construction or modification at the source does not result in net emissions increases above ''de minimis'' levels.

The second category of minor sources are those that emit above the de minimis levels, but below the major source significance levels. Permits for these sources may only be issued after a determination, among other requirements, that the proposed source or modification would not interfere with attainment or maintenance of a NAAQS (10 CSR 10–6.060(6)).

In this action, EPA is proposing to approve Missouri's infrastructure SIP for the 1997 and 2006 $PM_{2.5}$ standards with respect to the general requirement in section 110(a)(2)(C) to include a program in the SIP that regulates the modification and construction of any stationary source as necessary to assure that the NAAQS are achieved. In this action, EPA is not proposing to approve or disapprove the state's existing minor NSR program to the extent that it is inconsistent with EPA's regulations governing this program. EPA has maintained that the CAA does not require that new infrastructure SIP submissions correct any defects in existing EPA-approved provisions of minor NSR programs in order for EPA to approve the infrastructure SIP for element (C) (*e.g.,* 76 FR 41076–41079). EPA believes that a number of states may have minor NSR provisions that are contrary to the existing EPA regulations for this program. EPA intends to work with states to reconcile state minor NSR programs with EPA's regulatory provisions for the program. The statutory requirements of section 110(a)(2)(C) provide for considerable flexibility in designing minor NSR programs, and EPA believes it may be time to revisit the regulatory requirements for this program to give the states an appropriate level of flexibility to design a program that meets their particular air quality concerns, while assuring reasonable consistency across the country in protecting the NAAQS with respect to new and modified minor sources.

(3) *Prevention of Significant Deterioration (PSD) permit program.* Missouri also has a program approved by EPA as meeting the requirements of part C, relating to prevention of significant deterioration of air quality. In order to demonstrate that Missouri has met this sub-element, this PSD program must cover requirements for not just $PM_{2.5}$, but for all other regulated NSR pollutants as well. To implement the PSD permitting component of section 110(a)(2)(C) for the 1997 and 2006 $PM_{2.5}$ NAAQS, states were required to submit the necessary SIP revisions to EPA by May 16, 2011, and July 20, 2012, pursuant to EPA's NSR $PM_{2.5}$ Implementation Rule (2008 NSR Rule), (73 FR 28321, May 16, 2008) and EPA's $PM_{2.5}$ Increment-SILs-SMC Rule, (75 FR 64864, October 20, 2010). As described in section IV above, the January 4, 2013, court decision remanding 2008 rule does not impact the EPA's action as to this element.

The 2008 NSR Rule finalized several new requirements for SIPs to address sources that emit direct $PM_{2.5}$ and other pollutants that contribute to secondary $PM_{2.5}$ formation. One of these requirements is for NSR permits to address pollutants responsible for the secondary formation of $PM_{2.5}$, otherwise known as precursors. In the 2008 NSR Rule, the EPA identified precursors to $PM_{2.5}$ for the PSD program to include sulfur dioxide (SO_2) and nitrogen oxide (NO_X) (unless the state demonstrates to the Administrator's satisfaction or EPA demonstrates that NO_X emissions in an area are not a significant contributor to that area's ambient $PM_{2.5}$ concentrations). *See* 73 FR 28325. The 2008 NSR Rule also specified that volatile organic compounds (VOCs) are not considered to be precursors to $PM_{2.5}$ in the PSD program unless the state demonstrates to the Administrator's satisfaction or EPA demonstrates that emissions of VOCs in an area are significant contributors to that area's ambient $PM_{2.5}$ concentrations. The specific references to SO_2, NO_X, and VOCs as they pertain to secondary $PM_{2.5}$ formation are currently codified at 40 CFR 51.166(b)(49)(i)(b) and 40 CFR 52.21(b)(50)(i)(b). The deadline for states to submit SIP revisions to their PSD programs incorporating these new requirements was May 16, 2011 (73 FR 28341).

As part of identifying pollutants that are precursors to $PM_{2.5}$, the 2008 NSR Rule also revised the definition of ''significant'' as it relates to a net emissions increase or the potential of a source to emit pollutants. Specifically, 40 CFR 51.166(b)(23)(i) and 40 CFR 52.21(b)(23)(i) define ''significant'' for $PM_{2.5}$ to mean the following emissions rates: 10 tons per year (tpy) of direct $PM_{2.5}$; 40 tpy of SO_2; and 40 tpy of NO_X (unless the state demonstrates to the Administrator's satisfaction or EPA demonstrates that NO_X emissions in an area are not a significant contributor to that area's ambient $PM_{2.5}$ concentrations).

Another provision of the 2008 NSR Rule requires states to account for gases that could condense to form particulate matter, known as condensables, for applicability determinations and in establishing emission limits for $PM_{2.5}$ and PM_{10}[7] in NSR permits. EPA provided that states were required to account for $PM_{2.5}$ and PM_{10} condensables beginning on or after January 1, 2011. This requirement is currently codified in 40 CFR 51.166(b)(49)(i)(a) and 40 CFR 52.21(b)(50)(i)(a). Revisions to states' PSD programs incorporating the inclusion of condensables were required to be submitted to EPA by May 16, 2011 (73 FR at 28341).

The definition of ''regulated NSR pollutant'' in the PSD provisions of the 2008 rule inadvertently required states to also account for the condensable PM fraction with respect to one indicator of PM referred to as ''particular matter emissions.'' The term ''particulate matter emissions'' includes $PM_{2.5}$ and PM_{10} particles as well as larger particles, and is an indicator for PM that has long been used for measuring PM under various New Source Performance Standards (NSPS) (40 CFR part 60).[8] A

[7] PM_{10} refers to particles with diameters between 2.5 and 10 microns, oftentimes referred to as ''coarse'' particles.

[8] In addition to the NSPS for PM, it is noted that states regulated ''particulate matter emissions'' for many years in their SIPs for PM, and the same

Continued

similar provision addressing condensables was added to the Nonattainment NSR SIP provisions of the 2008 NSR Rule but does not include a requirement to account for ''particulate matter (PM) emissions'' in all cases (40 CFR 51.165(a)(1)(xxxvii)(D)). On October 12, 2012, EPA finalized a rulemaking to amend the definition of ''regulated NSR pollutant'' promulgated in the NSR $PM_{2.5}$ Rule regarding the PM condensable provision currently at 40 CFR 51.166(b)(49)(i)(a), 52.21(b)(50)(i)(a), and EPA's Emissions Offset Interpretative Ruling. *See* 77 FR 65107. The rulemaking removes the inadvertent requirement in the 2008 NSR Rule that the measurement of condensables be generally included as part of the measurement and regulation of ''particulate matter emissions.'' [9]

On April 2, 2013 (78 FR 19602), EPA proposed to approve Missouri's request to amend the SIP to meet the 2008 $PM_{2.5}$ NAAQS implementation requirements of the May 16, 2008, NSR $PM_{2.5}$ Rule as described above. In this SIP revision, Missouri adopted rule revisions to establish (1) the requirement for NSR permits to address directly emitted $PM_{2.5}$ and precursor pollutants; and (2) significant emission rates for direct $PM_{2.5}$ and precursor pollutants (SO_2 and NO_X), among other revisions. With respect to the condensable PM issue described above, Missouri has addressed this through the SIP submission received by EPA on September 5, 2012, and which is being proposed for approval in today's action, as discussed in more detail below. Therefore, EPA has proposed to incorporate into Missouri's SIP all of the provisions required by the 2008 $PM_{2.5}$ implementation rule that are applicable to element C of infrastructure SIPs.

With respect to the 2010 $PM_{2.5}$ Increment-SILs-SMC Rule, EPA is proposing to approve the portion of the September 5, 2012, submission addressing the required $PM_{2.5}$ increments and associated implementing regulations as part of today's proposed rulemaking. A further analysis of how Missouri meets the requirements of the 2010 rule is described below in sections VI and VII.

To meet the requirements of element (C), in addition to the $PM_{2.5}$ PSD elements that must be incorporated in to the SIP, each state's PSD program must meet applicable requirements for all regulated pollutants in PSD permits. For example, if a state lacks provisions needed to address NO_X as a precursor to ozone, the provisions of section 110(a)(2)(C) requiring a suitable PSD permitting program for $PM_{2.5}$ will not be considered to be met.

Relating to ozone, EPA's ''Final Rule to Implement the 8-Hour Ozone National Ambient Air Quality Standard—Phase 2; Final Rule to Implement Certain Aspects of the 1990 Amendments Relating to New Source Review and Prevention of Significant Deterioration as They Apply in Carbon Monoxide, Particulate Matter, and Ozone NAAQS; Final Rule for Reformulated Gasoline'' (Phase 2 Rule), was published on November 8, 2005 (70 FR 71612). Among other requirements, the Phase 2 Rule obligated states to revise their PSD programs to explicitly identify NO_X as a precursor to ozone (70 FR 71612 at 71679, and 71699–71700). This requirement is currently codified in 40 CFR 51.166(b)(49)(i)(b). On April 16, 2012, EPA finalized a rulemaking to approve the provisions into the Missouri SIP which provide that ozone precursors (volatile organic compounds—VOC and nitrogen oxides—NO_X) are regulated. *See* 77 FR 22500. For example, a source that is major for NO_X is also major for ozone under the state's PSD program in rule 10 CSR 10–6.060(8). In addition, rules 10 CSR 10–6.060(1)(A) and 10–6.060(8)(A) incorporate 40 CFR 52.21(b)(50)(i)(a) by reference. The latter regulation specifically identifies volatile organic compounds and nitrogen oxides as precursors to ozone in all attainment and unclassifiable areas.

Regarding greenhouse gases (GHG), on June 3, 2010, EPA issued a final rule establishing a ''common sense'' approach to addressing GHG emissions from stationary sources under the CAA permitting programs. The ''Prevention of Significant Deterioration and Title V Greenhouse Gas Tailoring Rule,'' or ''Tailoring Rule,'' set thresholds for GHG emissions that define when permits under the NSR PSD and Title V operating permit programs are required for new and existing industrial facilities. *See* 75 FR 31514. Without the new threshold provided by the Tailoring Rule, sources with GHG emissions above the statutory thresholds (of 100 or 250 tons per year) would be subject to PSD, which could have potentially resulted in apartment complexes, strip malls, small farms, restaurants, etc. triggering GHG PSD requirements.

On December 23, 2010, EPA promulgated a subsequent series of rules that put the necessary framework in place to ensure that industrial facilities can get CAA permits covering their GHG emissions when needed, and that facilities emitting GHGs at levels below those established in the Tailoring Rule need not obtain CAA permits.[10] Included in this series of rules was EPA's issuance of the ''Limitation of Approval of Prevention of Significant Deterioration Provisions Concerning Greenhouse Gas Emitting-Sources in State Implementation Plans,'' referred to as the PSD SIP ''Narrowing Rule'' (75 FR 82536, December 30, 2010). The Narrowing Rule limits, or ''narrows,'' EPA's approval of PSD programs applied to previously EPA-approved SIP PSD programs, including Missouri's, that apply PSD to GHG emissions. The Narrowing Rule limited, or ''narrowed,'' EPA's approval of Missouri's and other PSD programs so that the SIP provisions that apply PSD to GHG emissions increases from sources emitting GHG below the Tailoring Rule thresholds were no longer EPA approved, and instead, had the status of having been submitted by the state but not yet acted upon by EPA. In other words, the Narrowing Rule focused on eliminating the PSD obligations under Federal law for sources below the Tailoring Rule thresholds.

After EPA adopted the Narrowing Rule, Missouri submitted to EPA, and EPA approved in to the Missouri SIP on April 16, 2012, a revision that limited PSD applicability to GHG-emitting sources at or above the Tailoring Rule thresholds. With this SIP revision, Missouri's PSD program conforms to EPA's requirements for PSD programs with respect to GHG emissions, and avoids an overwhelming increase in the number of required permits and resulting burden on Missouri's permitting resources (77 FR 22500, April 16, 2012).

Based upon review of the State's infrastructure SIP submissions for the 1997 and 2006 $PM_{2.5}$ NAAQS and the September 5, 2012, submission regarding PSD requirements, and relevant statutory and regulatory authorities and provisions referenced in those submissions or referenced in Missouri's SIP, with respect to the requirements of section 110(a)(2)(C) for the 1997 and 2006 24-hour $PM_{2.5}$ NAAQS, EPA is proposing to approve

indicator has been used as a surrogate for determining compliance with certain standards contained in 40 CFR part 63, regarding National Emission Standards for Hazardous Air Pollutants.

[9] The change finalized in that action does not mean that EPA has entirely exempted the inclusion of the condensable PM fraction as part of accounting for ''particulate matter emissions.'' It may be necessary for PSD sources to count the condensable PM fraction with regard to ''particulate matter emissions'' where either the applicable NSPS compliance test includes the condensable PM fraction or the applicable implementation plan requires the condensable PM fraction to be counted. *See* 77 FR 65112.

[10] *http://www.epa.gov/NSR/actions.html#2010.*

the February 27, 2007, submission regarding the 1997 $PM_{2.5}$ infrastructure SIP requirements, the December 28, 2009, submission regarding the 2006 $PM_{2.5}$ infrastructure SIP requirements, and the September 5, 2012, submission regarding the PSD requirements. EPA's analysis of the September 5, 2012, submission is provided in sections VI and VII below.

(D) *Interstate and international transport:*

Section 110(a)(2)(D)(i)(I) requires SIPs to include adequate provisions prohibiting any source or other type of emissions activity in one state from contributing significantly to nonattainment, or interfering with maintenance, of any NAAQS in another state. Furthermore, section 110(a)(2)(D)(i)(II) requires SIPs to include adequate provisions prohibiting any source or other type of emissions activity in one state from interfering with measures required of any other state to prevent significant deterioration of air quality or to protect visibility. Section 110(a)(2)(D)(i) includes four requirements referred to as prongs 1 through 4. Prongs 1 and 2 are provided at section 110(a)(2)(D)(i)(I); Prongs 3 and 4 are provided at section 110(a)(2)(D)(i)(II).

In this notice, we are not proposing to take any actions related to the interstate transport requirements of section 110(a)(2)(D)(i)(I)—prongs 1 and 2. At this time, there is no SIP submission from Missouri relating to 110(a)(2)(D)(i)(I) for the 1997 or 2006 $PM_{2.5}$ NAAQS pending before the Agency. EPA previously approved the provisions of the Missouri SIP submission addressing the requirements of section 110(a)(2)(D)(i)(I) and (II), with respect to the 1997 $PM_{2.5}$ standards, into the Missouri SIP (72 FR 25975, May 8, 2007). EPA also disapproved the portion of the Missouri SIP submission intended to address section 110(a)(2)(D)(i)(I) with respect to the 2006 $PM_{2.5}$ NAAQS (76 FR 43156, July 20, 2011).

With respect to the PSD requirements of section 110(a)(2)(D)(i)(II)—prong 3, EPA notes that Missouri's satisfaction of the applicable infrastructure SIP PSD requirements for the 1997 and 2006 $PM_{2.5}$ NAAQS have been detailed in the section addressing section 110(a)(2)(C). EPA also notes that the proposed action in that section related to PSD is consistent with the proposed approval related to PSD for section 110(a)(2)(D)(i)(II). Therefore, EPA is proposing to approve the PSD requirements of section 110(a)(2)(D)(i)(II)—prong 3.

With regard to the applicable requirements for visibility protection of section 110(a)(2)(D)(i)(II)—prong 4, states are subject to visibility and regional haze program requirements under part C of the CAA (which includes sections 169A and 169B). The 2009 Memo [11] states that these requirements can be satisfied by an approved SIP addressing reasonably attributable visibility impairment, if required, and an approved SIP addressing regional haze.

Missouri meets this requirement through EPA-approved provisions requiring electric generating units (EGUs) in Missouri to comply with the Clean Air Interstate Rule (CAIR) and through the limited approval and limited disapproval of Missouri's regional haze SIP. Although Missouri's regional haze SIP has not been fully approved, EPA believes that the infrastructure SIP submission together with previously approved SIP provisions, specifically those provisions that require EGUs to comply with CAIR and the additional measures in the regional haze SIP addressing best available retrofit technology (BART) and reasonable progress requirements for other sources or pollutants, are adequate to demonstrate compliance with prong 4; thus, EPA is proposing to fully approve this aspect of the submission.

Missouri's regional haze SIP relied on the previous incorporation of CAIR into the EPA-approved SIP for Missouri as an alternative to the requirement that regional haze SIPs provide for source-specific BART emission limits for SO_2 and NO_X emissions from EGUs. At the time the regional haze SIP was being developed, Missouri's reliance on CAIR was fully consistent with EPA's regulations. CAIR, as originally promulgated, requires significant reductions in emissions of SO_2 and NO_X to limit the interstate transport of these pollutants, and EPA's determination that states could rely on CAIR as an alternative to requiring BART for CAIR-subject EGUs had specifically been upheld in *Utility Air Regulatory Group* v. *EPA,* 471 F.3d 1333 (D.C. Cir. 2006). Moreover, the states with Class I areas affected by emissions from sources in Missouri had adopted reasonable progress goals for visibility protection that were consistent with the EGU emission limits resulting from CAIR.

In 2008, however, the D.C. Circuit remanded CAIR back to EPA (see *North Carolina* v. *EPA,* 550 F.3d 1176 (D.C. Cir. 2008)). The Court found CAIR to be inconsistent with the requirements of the CAA (see *North Carolina* v. *EPA,* 531 F.3d 896 (D.C. Cir. 2008)), but ultimately remanded the rule to EPA without vacatur because it found that ''allowing CAIR to remain in effect until it is replaced by a rule consistent with [the Court's] opinion would at least temporarily preserve the environmental values covered by CAIR'' (*North Carolina,* 550 F.3d at 1178).

After the remand of CAIR by the D.C. Circuit and the promulgation by EPA of a new rule—Cross State Air Pollution Rule (CSAPR)—to replace CAIR, EPA issued a limited disapproval and Federal Implementation Plan (FIP) for Missouri regional haze SIP (and other states' regional haze SIPs that relied similarly on CAIR), which merely substituted reliance on CSAPR NO_X and SO_2 trading programs for EGUs for the SIP's reliance on CAIR because EPA believed that full approval of the SIP was not appropriate in light of the court's remand of CAIR and the uncertain but limited remaining period of operation of CAIR (77 FR 33642, June 7, 2012). EPA finalized a limited approval of the regional haze SIP, indicating that except for its reliance on CAIR, the SIP met CAA requirements for the first planning period of the regional haze program (77 FR 38007, June 26, 2012).[12]

Since the above-described developments with regard to Missouri's regional haze SIP, the situation has changed. In August 2012, the D.C. Circuit issued a decision to vacate CSAPR (*see EME Homer City* v. *EPA,* 696 F.3d 7 (D.C. Cir. 2012). In this decision, the Court ordered EPA to ''continue administering CAIR pending the promulgation of a valid replacement.'' Thus, EPA has been ordered by the Court to develop a new rule, and to continue implementing CAIR in the meantime, and the opinion makes clear that after promulgating that new rule EPA must provide states an opportunity to draft and submit SIPs to implement that rule. CAIR thus cannot be replaced until EPA has promulgated a final rule through a notice-and-comment rulemaking process; states

[11] William T. Harnett, Director, Air Quality Policy Division, Office of Air Quality Planning and Standards, ''Guidance on SIP Elements Required Under Sections 110(a(1) and (2) for the 2006 24-Hour Fine Particle ($PM_{2.5}$) National Ambient Air Quality Standards (NAAQS),'' Memorandum to EPA Regional Air Division Directors, Regions I–X, September 25, 2009.

[12] Under CAA sections 301(a) and 110(k)(6) and EPA's long-standing guidance, a limited approval results in approval of the entire SIP submission, even of those parts that are deficient and prevent EPA from granting a full approval of the SIP revision. *Processing of State Implementation Plan (SIP) Revisions,* EPA Memorandum from John Calcagni, Director, Air Quality Management Division, OAQPS, to Air Division Directors, EPA Regional Offices I–X, September 7, 1992, (1992 Calcagni Memorandum) located at *http://www.epa.gov/ttn/caaa/t1/memoranda/siproc.pdf.*

have had an opportunity to draft and submit SIPs; EPA has reviewed the SIPs to determine if they can be approved; and EPA has taken action on the SIPs, including promulgating a FIP, if appropriate.

EPA filed a petition for rehearing of the Court's decision on CSAPR, which was denied by the D.C. Circuit on January 24, 2013. However, based on the current direction from the Court to continue administering CAIR, EPA believes that it is appropriate to rely on CAIR emission reductions as permanent and enforceable for purposes of assessing the adequacy of Missouri's infrastructure SIP with respect to prong 4 while a valid replacement rule is developed and until implementation plans complying with any new rule are submitted by the states and acted upon by EPA or until the court case is resolved in a way that provides direction regarding CAIR and CSAPR.

As neither Missouri nor EPA has taken any action to remove CAIR from the Missouri SIP, CAIR remains part of the EPA-approved SIP and can be considered in determining whether the SIP as a whole meets the requirement of prong 4 of 110(a)(2)(D)(i). EPA is proposing to approve the infrastructure SIP submission with respect to prong 4 because Missouri's regional haze SIP which EPA has given a limited approval, in combination with its SIP provisions to implement CAIR, adequately prevent sources in Missouri from interfering with measures adopted by other states to protect visibility during the first planning period. While EPA is not at this time proposing to change the June 7, 2012, or June 26, 2012, limited disapproval and limited approval of Missouri's regional haze SIP, EPA expects to propose an appropriate action regarding Missouri's regional haze SIP upon final resolution of *EME Homer City*.

Section 110(a)(2)(D)(ii) also requires that the SIP insure compliance with the applicable requirements of sections 126 and 115 of the CAA, relating to interstate and international pollution abatement, respectively.

Section 126(a) of the CAA requires new or modified sources to notify neighboring states of potential impacts from sources within the state. Missouri regulations require that affected states receive notice prior to the commencement of any construction or modification of a source. Missouri's rule 10 CSR 10–6.060(6), ''Construction Permits Required'' requires that the review of all PSD permit applications follow the procedures of section (12)(A), Appendix A. Appendix A, in turn, requires that the permitting authority shall issue a draft permit for public comment, with notification to affected states on or before the time notice is provided to the public. In addition, no Missouri source or sources have been identified by EPA as having any interstate impacts under section 126 in any pending actions relating to any air pollutant.

Section 115 of the CAA authorizes EPA to require a state to revise its SIP under certain conditions to alleviate international transport into another country. There are no final findings under section 115 of the CAA against Missouri with respect to any air pollutant. Thus, the State's SIP does not need to include any provisions to meet the requirements of section 115.

Based upon review of the State's infrastructure SIP submissions for the 1997 and 2006 $PM_{2.5}$ NAAQS, and relevant statutory and regulatory authorities and provisions referenced in those submissions or referenced in Missouri's SIP, EPA believes that Missouri has the adequate infrastructure needed to address sections 110(a)(2)(D)(i)(II)—Prongs 3 and 4 and 110 (a)(2)(D)(ii) for the 1997 and 2006 $PM_{2.5}$ NAAQS. EPA is proposing to approve the February 27, 2007, submission regarding the 1997 $PM_{2.5}$ infrastructure SIP requirements and the December 28, 2009, submission regarding the 2006 $PM_{2.5}$ infrastructure SIP requirements for this element.

(E) Adequate authority, resources, implementation, and oversight: Section 110(a)(2)(E) requires that SIPs provide for the following: (1) Necessary assurances that the state (and other entities within the state responsible for implementing the SIP) will have adequate personnel, funding, and authority under State or local law to implement the SIP, and that there are no legal impediments to such implementation; (2) requirements that the state comply with the requirements relating to state boards, pursuant to section 128 of the CAA; and (3) necessary assurances that the state has responsibility for ensuring adequate implementation of any plan provision for which it relies on local governments or other entities to carry out that portion of the plan.

(1) Section 110(a)(2)(E)(i) requires states to establish that they have adequate personnel, funding and authority. With respect to adequate authority, we have previously discussed Missouri's statutory and regulatory authority to implement the 1997 and 2006 $PM_{2.5}$ NAAQS, primarily in the discussion of section 110(a)(2)(A) above. Neither Missouri nor EPA has identified any legal impediments in the State's SIP to implementation of these NAAQS.

With respect to adequate resources, MDNR asserts that it has adequate personnel to implement the SIP. The infrastructure SIP submission for both the 1997 and 2006 $PM_{2.5}$ NAAQS describes the regulations governing the various functions of personnel within the Air Pollution Control Program, including the Administration, Technical Support (Air Quality Analysis), Planning, Enforcement, and Permit Sections of the program (10 CSR 10–1.010(2)(D) ''Ambient Air Quality Standards'').

With respect to funding, the Air Conservation Law requires the MACC to establish an annual emissions fee for sources in order to fund the reasonable costs of administering various air pollution control programs. RsMO section 643.079 of the Air Conservation Law provides for the deposit of the fees into various subaccounts (e.g., a subaccount for the Title V operating permit program used for Title V implementation activities; a subaccount for non-Title V air pollution control program activities). The state uses funds in the non-Title V subaccounts, along with General Revenue funds and EPA grants under, for example, sections 103 and 105 of the CAA, to fund the programs. EPA conducts periodic program reviews to ensure that the state has adequate resources and funding to, among other things, implement the SIP.

(2) Conflict of interest provisions—Section 128

Section 110(a)(2)(E)(ii) requires that each state SIP meet the requirements of section 128, relating to representation on state boards and conflicts of interest by members of such boards. Section 128(a)(1) requires that any board or body which approves permits or enforcement orders under the CAA must have at least a majority of members who represent the public interest and do not derive any ''significant portion'' of their income from persons subject to permits and enforcement orders under the CAA. Section 128(a)(2) requires that members of such a board or body, or the head of an agency with similar powers, adequately disclose any potential conflicts of interest. In 1978, EPA issued a guidance memorandum recommending ways that states could meet the requirements of section 128, including suggested interpretations of certain terms in section 128.[13] EPA has not issued further guidance or

[13] *See* Memorandum from David O. Bickart to Regional Air Directors, ''Guidance to States for Meeting Conflict of Interest Requirements of Section 128,'' Suggested Definitions, March 2, 1978.

regulations of general applicability on the subject since that time. However, EPA has recently proposed certain interpretations of section 128 as part of its actions on other infrastructure SIPs consistent with the statutory requirements (s*ee, e.g.,* (77 FR 44555, July 30, 2012) and (77 FR 66398, November 5, 2012)). We are now proposing these same interpretations in relation to the Missouri SIP. On August 8, 2012, EPA received Missouri's SIP revision that addresses the section 128 requirements. In today's action, we are also proposing to approve Missouri's August 8, 2012, submission related to sections 110(a)(2)(E)(ii) and 128 of the CAA. EPA and Missouri have worked to assure that the State's SIP correctly addresses these requirements.

EPA's analysis consisted of review of Missouri's August 8, 2012, SIP submission and EPA's additional review of Missouri statutes and authorities. The first step in the analysis included identifying boards, bodies and persons responsible for approving permits and enforcement orders and determining the applicability of the section 128 requirements to these entities. Section 643.050 of the Air Conservation Law authorizes the MACC to approve enforcement orders. In addition, Missouri Chapter 1 rule ''General Organization'' (2)(B) gives the Director of MDNR the authority to issue orders and act upon permit applications. Therefore, at a minimum the MACC must satisfy the requirements of sections 128(a)(1) and (2), and as the head of an executive agency with similar powers, the Director of MDNR must satisfy the requirements of section 128(a)(2).

Section 128(a)(1) contains two separate requirements applicable to any board or body which approves permits or enforcement orders under the CAA. First, a majority of members of the board or body must ''represent the public interest'' (''public interest'' requirement). Second, a majority of members must ''not derive any significant portion of their income from persons subject to permits or enforcement orders'' (''significant income'' requirement). The specific provisions of Missouri's Air Conservation Law submitted as SIP revisions are relevant to the requirements of CAA section 128(a)(1).

With respect to the ''public interest'' requirement, section 643.040.2 of the Air Conservation Law establishes that the MACC members must ''be representative of the general interest of the public.'' With respect to the ''significant income'' requirement, both sections 643.040.2 and 105.450 of Missouri's Air Conservation Law were submitted to EPA for inclusion in the SIP. Section 643.040.2 states that ''the governor shall not appoint any other person who has a substantial interest as defined in 105.450'' in any business entity regulated under the Air Conservation Law or any business entity which would be regulated under the Air Conservation Law if located in Missouri. ''Substantial interest,'' in turn, is defined in section 105.450 as ownership by the individual, the individual's spouse, or the individual's dependent children, whether singularly or collectively, directly or indirectly, of ten percent or more of any business entity, or of an interest having a value of ten thousand dollars or more, or the receipt by an individual, the individual's spouse or the individual's dependent children, whether singularly or collectively, of a salary, gratuity, or other compensation or remuneration of five thousand dollars, or more, per year from any individual, partnership, organization, or association with any calendar year. The provisions at sections 643.040 and 105.450 have both been submitted for inclusion in to the SIP. In addition, section 105.463 which has also been submitted for inclusion in to the SIP, requires members of the commission to file a financial interest statement.

To satisfy section 128(a)(2) of the CAA, Missouri's August 8, 2012, submission identified RsMO section 643.040.2, which establishes ''rules of procedure which specify when members shall exempt themselves from participating in discussions and from voting on issues before the commission due to potential conflict of interest.'' In addition, RsMO sections 105.452 and 105.454 identify ''prohibited acts'' that apply to both elected or appointed officials and to state employees which relate to disclosure of conflicts of interest and financial gain. As an example of a ''prohibited act,'' elected or appointed officials or employees of Missouri shall not act (or refrain from acting in any capacity in which she is lawfully empowered to act) ''by reason of any payment, offer to pay, promise to pay, or receipt of anything of actual pecuniary value'' paid or received to herself or any third person in relationship to or as a condition of the performance of an official act (RsMO 105.452.1(1)). These officials or employees are also prohibited from using or disclosing confidential information obtained in the course of or by reason of her employment or official capacity in any manner with intent to result in financial gain for herself, her spouse, her dependent child, or any business with which she is associated (RsMO 105.452.1(2),(3)).

Chapter 1 Missouri State regulation ''Commission Voting and Meeting Procedures'' (1) and (2) also further require disclosure of conflicts of interest and require members with conflicts of interest to be excluded from voting on the matter at issue, unless that member receives a determination from the MACC that the interest is ''not so substantial as to be deemed likely to affect the integrity of the services which the state expects from commission members.'' Finally, RsMO sections 105.466 and 105.472 include applicable exemptions to the ''prohibited acts'' identified in RsMO sections 105.450 to 105.458 and 105.462 to 105.468 and information regarding complaints about any violations of these prohibitions related to boards and executives. All of these provisions have been submitted by Missouri for inclusion in to the SIP.

As it relates to appointed public officials, such as the Director of MDNR, the provisions as described above in sections 105.452 and 105.454 also apply to heads of the executive agency.

EPA believes that the above identified relevant sections of Missouri's Air Conservation Law and the Missouri air regulations directly address the provisions related to sections 128(a)(1) and (2) of the CAA. We propose to approve the following provisions in to the Missouri SIP, as they strengthen the SIP with respect to the conflict of interest requirement of CAA section 128:

- RsMO 643.040.2
- RsMO 105.450
- RsMO 105.452
- RsMO 105.454
- RsMO 105.462
- RsMO 105.463
- RsMO 105.466
- RsMO 105.472
- 10 CSR 10–1.020(1) and (2)

(3) With respect to assurances that the state has responsibility to implement the SIP adequately when it authorizes local or other agencies to carry out portions of the plan, RsMO section 643.190 designates the MDNR as the air pollution control agency ''for all purposes'' of the CAA. Although RsMO section 643.140 authorizes the MACC to grant local governments such as cities or counties authority to carry out their own air pollution control programs, the MACC retains authority to enforce the provisions of Missouri's Air Conservation Law in these local areas, notwithstanding any such authorization (RsMO 643.140.4). The MACC may also suspend or repeal the granting of

authority if the local government is enforcing any local rules in a manner inconsistent with state law (RsMO 643.140.10).

There are three local air agencies that conduct air quality work in Missouri: Kansas City, Springfield/Greene County and St. Louis County. The MDNR's Air Pollution Control Program has a signed Memorandum of Understanding (MOU) with Kansas City and Springfield/Greene County and a draft agreement for St. Louis County (to be finalized) which outlines the responsibilities for air quality activities with each local agency. The MDNR Air Program oversees the activities of the local agencies to ensure adequate implementation of the Missouri SIP. EPA conducts reviews of the local program activities in conjunction with its oversight of the state program.

Based upon review of the State's infrastructure SIP submissions for the 1997 and 2006 $PM_{2.5}$ NAAQS and the August 8, 2012, SIP submission, and relevant statutory and regulatory authorities and provisions referenced in those submissions or referenced in Missouri's SIP, EPA believes that Missouri has the adequate infrastructure needed to address section 110(a)(2)(E) for the 1997 and 2006 $PM_{2.5}$ NAAQS and is proposing to approve the February 27, 2007, submission regarding the 1997 $PM_{2.5}$ infrastructure SIP requirements, the December 28, 2009, submission regarding the 2006 $PM_{2.5}$ infrastructure SIP requirements, and the August 8, 2012, submission relating to section 128 requirements.

(F) Stationary source monitoring system: Section 110(a)(2)(F) requires states to establish a system to monitor emissions from stationary sources and to submit periodic emission reports. Each SIP shall require the installation, maintenance, and replacement of equipment, and the implementation of other necessary steps, by owners or operators of stationary sources, to monitor emissions from such sources. The SIP shall also require periodic reports on the nature and amounts of emissions and emissions-related data from such sources, and requires that the state correlate the source reports with emission limitations or standards established under the CAA. These reports must be made available for public inspection at reasonable times.

To address this element, RsMO section 643.050.1(3)(a) of the Air Conservation Law authorizes the MACC to require persons engaged in operations which result in air pollution to monitor or test emissions and to file reports containing information relating to rate, period of emission and composition of effluent. Missouri rule 10 CSR 10–6.030 ''Sampling Methods for Air Pollution Sources'' incorporates various EPA reference methods for sampling and testing source emissions, including methods for PM emissions. The Federal test methods are in 40 CFR part 51, Appendix M and part 60, Appendix A.

Missouri rule 10 CSR 10–6.110 ''Reporting & Emission Data, Emission Fees, and Process Information'' also requires monitoring of emissions and filing of periodic reports on emissions (see (4)(A) for the specific information required). Missouri uses this information to track progress towards maintaining the NAAQS, developing control and maintenance strategies, identifying sources and general emission levels, and determining compliance with emission regulations and additional EPA requirements. Missouri makes this information available to the public (10 CSR 10–6.110(3)(D) ''Reporting & Emission Data, Emission Fees, and Process Information''). Missouri rule 10 CSR 10–6.210 ''Confidential Information,'' specifically excludes emissions data from confidential treatment. Under that rule emissions data includes the results of any emissions testing or monitoring required to be reported by sources under Missouri's air pollution control rules (10 CSR 10–6.210(3)(B)2).

Based upon review of the State's infrastructure SIP submissions for the 1997 and 2006 $PM_{2.5}$ NAAQS, and relevant statutory and regulatory authorities and provisions referenced in those submissions or referenced in Missouri's SIP, EPA believes that Missouri has the adequate infrastructure needed to address section 110(a)(2)(F) for the 1997 and 2006 $PM_{2.5}$ NAAQS and is proposing to approve the February 27, 2007, submission regarding the 1997 $PM_{2.5}$ infrastructure SIP requirements and the December 28, 2009, submission regarding the 2006 $PM_{2.5}$ infrastructure SIP requirements for this element.

(G) Emergency authority: Section 110(a)(2)(G) requires SIPs to provide for authority to address activities causing imminent and substantial endangerment to public health or welfare or the environment (comparable to the authorities provided in Section 303 of the CAA), and to include contingency plans to implement such authorities as necessary.

RsMO section 643.090.1 of the Air Conservation Law authorizes the MACC or the director of MDNR to declare an emergency where the ambient air, ''due to meteorological conditions and a buildup of air contaminants'' in Missouri, may present an ''emergency risk to the public health, safety, or welfare.'' The MACC or director may, with the written approval of the governor, by order prohibit, restrict or condition all sources of air contaminants contributing to the emergency condition, during such periods of time necessary to alleviate or lessen the effects of the emergency condition. The statute also enables the MACC to promulgate implementing regulations. Even in the absence of an emergency condition, RsMO section 643.090.2 also authorizes the MACC or the director to issue ''cease and desist'' orders to any specific person who is either engaging or may engage in activities which involve a significant risk of air contamination or who is discharging into the ambient air any air contaminant, and such activity or discharge presents a clear and present danger to public health or welfare.

Missouri rule 10 CSR 10–6.130 ''Controlling Emissions During Episodes of High Air Pollution Potential'' includes action levels and contingency measures for $PM_{2.5}$ and other pollutants. This rule specifies the conditions that establish an air pollution alert and the associated procedures and emissions reduction objectives for dealing with each.

With respect to contingency plan requirements of section 110(a)(2)(G), EPA has issued guidance making recommendations for how states may elect to approach this issue. In that guidance, EPA recommended that, where a state can demonstrate that $PM_{2.5}$ levels have remained below 140.4 micrograms per cubic meter, the state is not required to develop a contingency plan to satisfy element (G). EPA believes that this is a reasonable interpretation of the statute and addresses the $PM_{2.5}$ NAAQS in a way analogous to other NAAQS pollutants. $PM_{2.5}$ monitoring data from monitors across the state have shown that 24-hour $PM_{2.5}$ values have never exceeded 140.4 micrograms per cubic meter in Missouri. Therefore, Missouri is not required to develop a contingency plan for $PM_{2.5}$ at this time.

That said, Missouri's regulations provide for contingency plans (or alert plans) to be implemented if an area's Air Quality Alert value exceeds 200 micrograms per cubic meter. These plans must include provisions for reducing emissions, such as curtailing production processes, diverting power generation to facilities outside of the alert area, and stoppage of waste disposal practices or open burning. Missouri rule 10 CSR 10–6.130(3)(D)4 ''Controlling Emissions During Episodes of High Air Pollution Potential.''

Based on a review of these regulatory requirements (which have previously been approved by EPA as part of Missouri's SIP (*see* 50 FR 41348), and a comparison of it to the requirements in 40 CFR 51.150–51.153, EPA believes that the Missouri SIP adequately addresses section 110(a)(2)(G) for the 1997 and 2006 $PM_{2.5}$ NAAQS and is proposing to approve the February 27, 2007, submission regarding the 1997 $PM_{2.5}$ infrastructure SIP requirements and the December 28, 2009, submission regarding the 2006 $PM_{2.5}$ infrastructure SIP requirements for this element.

(H) Future SIP revisions: Section 110(a)(2)(H) requires states to have the authority to revise their SIPs in response to changes in the NAAQS, availability of improved methods for attaining the NAAQS, or in response to an EPA finding that the SIP is substantially inadequate to attain the NAAQS.

In addition to the MACC's general enabling authority in RsMO section 643.050 of the Air Conservation Law, discussed previously in element (A), section 643.055.1 grants the MACC and MDNR authority to promulgate rules and regulations to establish standards and guidelines, to ensure that Missouri complies with the provisions of the Federal CAA. Missouri's Chapter 1 state rule ''General Organization'' (2) grants similar powers to MDNR. This includes the authority to submit SIP revisions to the EPA for approval as necessary to respond to a revised NAAQS and to respond to EPA findings of substantial inadequacy (*e.g.,* 71 FR 46860, August 15, 2006), in which EPA approved Missouri rules promulgated in response to EPA's NO_X SIP call for Missouri and other states).

Based upon review of the State's infrastructure SIP submissions for the 1997 and 2006 $PM_{2.5}$ NAAQS, and relevant statutory and regulatory authorities and provisions referenced in those submissions or referenced in Missouri's SIP, EPA believes that Missouri has adequate authority to address section 110(a)(2)(H) for the 1997 and 2006 $PM_{2.5}$ NAAQS and is proposing to approve the February 27, 2007, submission regarding the 1997 $PM_{2.5}$ infrastructure SIP requirements and the December 28, 2009, submission regarding the 2006 $PM_{2.5}$ infrastructure SIP requirements for this element.

(I) Nonattainment areas: Section 110(a)(2)(I) requires that in the case of a plan or plan revision for areas designated as nonattainment areas, states must meet applicable requirements of part D of the CAA, relating to SIP requirements for designated nonattainment areas.

As noted earlier, EPA does not expect infrastructure SIP submissions to address subsection (I). The specific SIP submissions for designated nonattainment areas, as required under CAA title I, part D, are subject to different submission schedules than those for section 110 infrastructure elements. Instead, EPA will take action on part D attainment plan SIP submissions through a separate rulemaking governed by the requirements for nonattainment areas, as described in part D.

(J) Consultation with government officials, public notification, PSD and visibility protection: Section 110(a)(2)(J) requires SIPs to meet the applicable requirements of the following CAA provisions: (1) Section 121, relating to interagency consultation regarding certain CAA requirements; (2) section 127, relating to public notification of NAAQS exceedances and related issues; and (3) part C of the CAA, relating to prevention of significant deterioration of air quality and visibility protection.

(1) With respect to interagency consultation, the SIP should provide a process for consultation with general-purpose local governments, designated organizations of elected officials of local governments, and any Federal Land Manager having authority over Federal land to which the SIP applies. Section 643.050.3 of the Missouri Air Conservation Law requires the MACC to consult and cooperate with other Federal and state agencies, and with political subdivisions, for the purpose of prevention, abatement, and control of air pollution. Missouri also has appropriate interagency consultation provisions in its preconstruction permit program. For instance, Missouri rule 10 CSR 10–6.060(12)(B)2.E ''Construction Permits Required'' requires that when a permit goes out for public comment, the permitting authority must provide notice to local air pollution control agencies, the chief executive of the city and county where the installation or modification would be located, any comprehensive regional land use planning agency, any state air program permitting authority, and any Federal Land Manager whose lands may be affected by emissions from the installation or modification.

(2) With respect to the requirements for public notification in section 127, the infrastructure SIP should provide citations to regulations in the SIP requiring the air agency to regularly notify the public of instances or areas in which any NAAQS are exceeded; advise the public of the health hazard associated with such exceedances; and enhance public awareness of measures that can prevent such exceedances and of ways in which the public can participate in the regulatory and other efforts to improve air quality. Missouri rule 10 CSR 10–6.130 ''Controlling Emissions During Episodes of High Air Pollution Potential,'' discussed previously in connection with the state's authority to address emergency episodes, contains provisions for public notification of elevated $PM_{2.5}$ and other air pollutant levels, and measures which can be taken by the public to reduce concentrations. In addition, information regarding air pollution and related issues, is provided on an MDNR Web site, *http://www.dnr.missouri.gov/env/apcp/index.html*.

(3) With respect to the applicable requirements of part C of the CAA, relating to prevention of significant deterioration of air quality and visibility protection, we note in section VII of this rulemaking how the Missouri SIP meets the PSD requirements, incorporating the federal rule by reference. With respect to the visibility component of section 110(a)(2)(J), EPA recognizes that states are subject to visibility and regional haze program requirements under part C of the CAA. However, when EPA establishes or revises a NAAQS, these visibility and regional haze requirements under part C do not change. EPA believes that there are no new visibility protection requirements under part C as a result of a revised NAAQS. Therefore, there are no newly applicable visibility protection obligations pursuant to element J after the promulgation of a new or revised NAAQS. Missouri has submitted a SIP revision to satisfy the requirements of CAA sections 169A and 169B, and the regional haze and BART rules contained in 40 CFR 51.308. On June 7, 2012, EPA published a final rulemaking regarding Missouri's regional haze program consisting of a limited disapproval and FIP (*see* 77 FR 33642). In addition, on June 26, 2012, EPA published a final rulemaking regarding Missouri's regional haze program consisting of a limited approval (*see* 77 FR 38007). In EPA's view, the current status of Missouri's regional haze SIP as having not been fully approved is not a bar to full approval of the infrastructure SIP submission with respect to the visibility protection aspect of 110(a)(2)(J), and EPA is proposing to fully approve the infrastructure SIP for this aspect. While EPA is not at this time proposing to change the June 26, 2012, limited approval or the June 7, 2012, limited disapproval of Missouri's regional haze SIP itself, EPA expects to address the approval status of the regional haze SIP

upon final resolution of *EME Homer City.*

Based upon review of the State's infrastructure SIP submissions for the 1997 and 2006 $PM_{2.5}$ NAAQS, and relevant statutory and regulatory authorities and provisions referenced in those submissions or referenced in Missouri's SIP, EPA believes that Missouri has met the applicable requirements of section 110(a)(2)(J) for the 1997 and 2006 $PM_{2.5}$ NAAQS in the state and is therefore proposing to approve the February 27, 2007, submission regarding the 1997 $PM_{2.5}$ infrastructure SIP requirements and the December 28, 2009, submission regarding the 2006 $PM_{2.5}$ infrastructure SIP requirements for this element.

(K) Air quality and modeling/data: Section 110(a)(2)(K) requires that SIPs provide for performing air quality modeling, as prescribed by EPA, to predict the effects on ambient air quality of any emissions of any NAAQS pollutant, and for submission of such data to EPA upon request.

Missouri has authority to conduct air quality modeling and report the results of such modeling to EPA. Section 643.050 of the Air Conservation Law provides the MACC with the general authority to develop a general comprehensive plan to prevent, abate and control air pollution. Along with section 643.055, which grants the MACC the authority to promulgate rules and regulations to establish standards and guidelines to ensure that Missouri is in compliance with the provisions of the CAA, EPA believes MDNR has the authority to conduct modeling to address NAAQS issues. As an example of regulatory authority to perform modeling for purposes of determining NAAQS compliance, Missouri regulation 10 CSR 10–6.060(12)(F) ''Construction Permits Required'' requires the use of EPA-approved air quality models (e.g., those found in 40 CFR part 51, Appendix W) for construction permitting. Rule 10 CSR 10–6.110(4) ''Reporting & Emission Data, Emission Fees, and Process Information'' requires specified sources of air pollution to report emissions to MDNR, which among other purposes may be utilized in modeling analyses. These data are available to any member of the public, upon request (10 CSR 10–6.110(3)(D)).

Based upon review of the state's infrastructure SIP submissions for the 1997 and 2006 $PM_{2.5}$ NAAQS, and relevant statutory and regulatory authorities and provisions referenced in those submissions or referenced in Missouri's SIP, EPA believes that Missouri has the adequate infrastructure needed to address section 110(a)(2)(K) for the 1997 and 2006 $PM_{2.5}$ NAAQS and is proposing to approve the February 27, 2007, submission regarding the 1997 $PM_{2.5}$ infrastructure SIP requirements and the December 28, 2009, submission regarding the 2006 $PM_{2.5}$ infrastructure SIP requirements for this element.

(L) Permitting Fees: Section 110(a)(2)(L) requires SIPs to require each major stationary source to pay permitting fees to the permitting authority, as a condition of any permit required under the CAA, to cover the cost of reviewing and acting upon any application for such a permit, and, if the permit is issued, the costs of implementing and enforcing the terms of the permit. The fee requirement applies until a fee program established by the state pursuant to Title V of the CAA, relating to operating permits, is approved by EPA.

Section 643.079 of the Air Conservation Law provides authority for MDNR to collect permit fees, including Title V fees. EPA approved Missouri's Title V program in May 1997 (s*ee* 62 FR 26405). EPA is reviewing the Missouri Title V program, including Title V fee structure, separately from this proposed action. Because the Title V program and associated fees legally are not part of the SIP, the infrastructure SIP action we are proposing today does not preclude EPA from taking future action regarding Missouri's Title V program.

Therefore, EPA believes that the requirements of section 110(a)(2)(L) are met and is proposing to approve the February 27, 2007, submission regarding the 1997 $PM_{2.5}$ infrastructure SIP requirements and the December 28, 2009, submission regarding the 2006 $PM_{2.5}$ infrastructure SIP requirements for this element.

(M) Consultation/participation by affected local entities: Section 110(a)(2)(M) requires SIPs to provide for consultation and participation by local political subdivisions affected by the SIP.

Section 643.050.3 of the Air Conservation Law requires that the MACC encourage political subdivisions to handle air pollution control problems within their respective jurisdictions to the extent possible and practicable, and to provide assistance to those political subdivisions. The MACC is also required to advise, consult and cooperate with other political subdivisions in Missouri. RsMO section 643.140 provides the mechanism for local political subdivisions to enact and enforce their own air pollution control regulations, subject to the oversight of the MACC. The MDNR's Air Pollution Control Program has a signed Memorandum of Understanding (MOU) with Kansas City and Springfield/Greene County and a draft agreement with St. Louis County (to be finalized) which outlines the responsibilities for air quality activities with each local agency. In addition, MDNR participates in community meetings and consults with and participates in interagency consultation groups such as the Metropolitan Planning Organizations in both Kansas City and St. Louis. In Kansas City, MDNR works with the Mid-America Regional Council and in St. Louis, MDNR works with East-West Gateway Coordinating Council of Governments.

Based upon review of the State's infrastructure SIP submissions for the 1997 and 2006 $PM_{2.5}$ NAAQS, and relevant statutory and regulatory authorities and provisions referenced in those submissions or referenced in Missouri's SIP, EPA believes that Missouri has the adequate infrastructure needed to address section 110(a)(2)(M) for the 1997 and 2006 $PM_{2.5}$ NAAQS and is proposing to approve the February 27, 2007, submission regarding the 1997 $PM_{2.5}$ infrastructure SIP requirements and the December 28, 2009, submission regarding the 2006 $PM_{2.5}$ infrastructure SIP requirements for this element.

VI. What are the requirements of the $PM_{2.5}$ PSD Increment-SILs-SMC rule for PSD SIP programs?

The 2010 $PM_{2.5}$ Increment-SILs-SMC Rule provided additional regulatory requirements under the PSD SIP program regarding the implementation of the $PM_{2.5}$ NAAQS (75 FR 64864). As a result, the rule required states to submit SIP revisions to adopt the required PSD increments by July 20, 2012 (75 FR 64864). Specifically, the rule required a state's submitted PSD SIP revision to adopt and submit for EPA approval the $PM_{2.5}$ increments pursuant to section 166(a) of the CAA to prevent significant deterioration of air quality in areas meeting the NAAQS.

That rule also permitted states, at their discretion, to choose to adopt and submit for EPA approval into the SIP SILs, used as a screening tool (by a major source subject to PSD), to evaluate the impact a proposed major source or modification may have on the NAAQS or PSD increment; and a SMC (also a screening tool), used by a major source subject to PSD to determine the subsequent level of data gathering required for a PSD permit application for emissions of $PM_{2.5}$. More detail on the $PM_{2.5}$ PSD Increment-SILs-SMC Rule can be found at 75 FR 64864. In regards

to the SILs and SMC provisions of the 2010 $PM_{2.5}$ rule, on January 22, 2013, the U.S. Court of Appeals for the District of Columbia, in *Sierra Club* v. *EPA,* No. 10–1413 (filed Dec. 17. 2010), issued a judgment that, *inter alia,* vacated and remanded the provisions concerning implementation of the $PM_{2.5}$ SILs and vacated the provisions adding the $PM_{2.5}$ SMC that were promulgated as part of the 2010 $PM_{2.5}$ PSD Rule.

Accordingly, the only remaining requirements from the 2010 rule are the $PM_{2.5}$ increment and associated provisions discussed below. Under section 165(a)(3) of the CAA, a PSD permit applicant must demonstrate that emissions from the proposed construction and operation of a facility ''will not cause, or contribute to, air pollution in excess of any maximum allowable increase or allowable concentration for any pollutant.'' In other words, when a source applies for a PSD SIP permit to emit a regulated pollutant in an attainment or unclassifiable area, the permitting authority implementing the PSD SIP must determine if emissions of the regulated pollutant from the source will cause significant deterioration in air quality. Significant deterioration occurs when the amount of the new pollution exceeds the applicable PSD increment, which is the ''maximum allowable increase'' of an air pollutant allowed to occur above the applicable baseline concentration [14] for that pollutant. PSD increments prevent air quality in attainment and unclassifiable areas from deteriorating up to or beyond the level set by the NAAQS. Therefore, an increment is the mechanism used to estimate ''significant deterioration'' of air quality for a pollutant in an area.

For PSD baseline purposes, a baseline area for a particular pollutant emitted from a source includes the attainment or unclassifiable/attainment area in which the source is located, as well as any other attainment or unclassifiable/attainment area in which the source's emissions of that pollutant are projected (by air quality modeling) to result in an ambient pollutant increase of at least 1 ug/m^3 (annual average) (40 CFR 51.166(b)(15)(i) and (ii)). Under EPA's existing regulations, the establishment of a baseline area for any PSD increment results from the submission of the first complete PSD permit application after a trigger date (which for $PM_{2.5}$ is defined as October 20, 2011, by regulation) and is based on the location of the proposed source and its emissions impact on the area. Once the baseline area is established, subsequent PSD sources locating in that area must consider that a portion of the available increment may have already been consumed by previous emissions increases. In general, the submittal date of the first complete PSD permit application in a particular area is the operative ''baseline date.'' [15] On or before the date of the first complete PSD application, emissions generally are considered to be part of the baseline concentration, except for certain emissions from major stationary sources. Most emissions increases that occur after the baseline date will be counted toward the amount of increment consumed. Similarly, emissions decreases after the baseline date restore or expand the amount of increment that is available (*see* 75 FR 64864). As described in the $PM_{2.5}$ PSD Increment-SILs-SMC rule, pursuant to the authority under section 166(a) of the CAA, EPA promulgated numerical increments for $PM_{2.5}$ as a new pollutant [16] for which the NAAQS were established after August 7, 1977,[17] and derived 24-hour and annual $PM_{2.5}$ increments for the three area classifications (Class I, II and III) using the ''contingent safe harbor'' approach (75 FR at 64869, and table at 40 CFR 51.166(c)(1)).

In addition to PSD increments for the 2006 $PM_{2.5}$ NAAQS, the $PM_{2.5}$ PSD Increment-SILs-SMC rule amended the definition at 40 CFR 51.166 and 40 CFR 52.21 for ''major source baseline date'' and ''minor source baseline date'' to establish the $PM_{2.5}$ NAAQS specific dates (including trigger dates) associated with the implementation of $PM_{2.5}$ PSD increments. See the PSD Increment-SILs-SMC rule for a more detailed discussion on the amendments to these definitions (75 FR 64864). In accordance with section 166(b) of the CAA, EPA required the states to submit revised implementation plans adopting the $PM_{2.5}$ PSD increments to EPA for approval within twenty one months from promulgation of the final rule (*i.e.,* by July 20, 2012). Each state was responsible for determining how increment consumption and the setting of the minor source baseline date for $PM_{2.5}$ would occur under its own PSD program. Regardless of when a state begins to require $PM_{2.5}$ increment analysis and how it chooses to set the $PM_{2.5}$ minor source baseline date, the emissions from sources subject to PSD for $PM_{2.5}$ for which construction commenced after October 20, 2010 (major source baseline date) consume the $PM_{2.5}$ increment and therefore should be included in the increment analyses occurring after the minor source baseline date is established for an area under the state's revised PSD SIP program.

VII. How does the September 5, 2012 Missouri PSD submission satisfy the $PM_{2.5}$ PSD Increment-SILs-SMC Rule?

To address the requirements of EPA's October 20, 2010, $PM_{2.5}$ PSD Increment-SILs-SMC Rule, Missouri submitted a SIP revision received by EPA on September 5, 2012, which updated its PSD rules to establish the allowable $PM_{2.5}$ increments, the optional screening tools (SILs), and significant monitoring concentrations (SMCs). On March 19, 2013, Missouri amended and clarified its submission so that it was no longer intending to include specific provisions relating to the SILs and SMC affected by the January 22, 2013, court decision referenced above. Therefore, in today's action, EPA is proposing to approve portions of the SIP revision which adopt PSD increments for the $PM_{2.5}$ annual and 24-hour NAAQS pursuant to section 166(a) of the CAA only. Our analysis of the SIP revision follows.

Specifically, regarding the PSD increments, the submitted SIP revision changes include: (1) The $PM_{2.5}$ increments as promulgated at 40 CFR 51.166(c)(1) and (p)(4) (for Class I variances) and (2) amendments to the terms ''major source baseline date'' (at 40 CFR 51.166(b)(14)(i)(c)) and 40 CFR 52.21(b)(14)(i)(c)), ''minor source baseline date''(including establishment of the ''trigger date'') and ''baseline area'' (as amended at 40 CFR 51.166(b)(15)(i) and (ii) and 40 CFR 52.21(b)(15)(i)). In the September 5, 2012, SIP revision, Missouri incorporates by reference into the SIP the particular definitions from 40 CFR part 51 as referenced above through July 1, 2011. Missouri updated Table 1—Ambient Air Increment Table to adopt the increments as described above in Class I, II, and III areas. Missouri has

[14] Section 169(4) of the CAA provides that the baseline concentration of a pollutant for a particular baseline area is generally the same air quality at the time of the first application for a PSD permit in the area.

[15] Baseline dates are pollutant specific. That is, a complete PSD application establishes the baseline date only for those regulated NSR pollutants that are projected to be emitted in significant amounts (as defined in the regulations) by the applicant's new source or modification. Thus, an area may have different baseline dates for different pollutants.

[16] EPA generally characterized the $PM_{2.5}$ NAAQS as a NAAQS for a new indicator of PM. EPA did not replace the PM_{10} NAAQs with the NAAQS for $PM_{2.5}$ when the $PM_{2.5}$ NAAQS were promulgated in 1997. Rather, EPA retained the annual and 24-hour NAAQS for PM_{10} as if $PM_{2.5}$ was a new pollutant even though EPA had already developed air quality criteria for PM generally. 75 FR 64864.

[17] EPA interprets 166(a) to authorize EPA to promulgate pollutant-specific PSD regulations meeting the requirements of section 166(c) and 166(d) for any pollutant for which EPA promulgates a NAAQS after 1977.

also updated Table 2—Significant Monitoring Concentrations for $PM_{2.5}$ and Table 4 Significant Levels for $PM_{2.5}$.

As described under element C in section V of this rulemaking, states had an obligation to address condensable PM emissions as a part of the 2008 $PM_{2.5}$ NSR implementation rule. In Missouri's SIP submission from September 5, 2012, Missouri incorporated by reference EPA's definition for regulated NSR pollutant (formerly at 40 CFR 51.166(b)(49)(vi)), including the term ''particulate matter emissions,'' as inadvertently promulgated in the 2008 NSR Rule. EPA is, however, proposing to approve into the Missouri SIP the requirement that condensable PM be accounted for in applicability determinations and in establishing emissions limitations for $PM_{2.5}$ and PM_{10} because it is more stringent than the Federal requirement. Missouri can choose to initiate further rulemaking to ensure consistency with Federal requirements.

In today's action, EPA is proposing to approve Missouri's September 5, 2012, revision to address the $PM_{2.5}$ PSD increment provisions promulgated in the $PM_{2.5}$ PSD Increments SILs-SMC rule and the obligation to address condensable PM emissions as a part of the 2008 $PM_{2.5}$ NSR implementation rule except as identified in Missouri's letter where Missouri amended and clarified its submission so that it was no longer intending to include specific provisions relating to the SILs and SMC affected by the January 22, 2013, court decision referenced above. As noted in EPA's April 16, 2012, final action on Missouri's PSD program (77 FR 22500), provisions of the incorporated 2002 NSR reform rule relating to the Clean Unit Exemption, Pollution Control Projects (PCPs), and exemption from the recordkeeping provisions for certain sources using the actual-to-projected-actual emissions projections test are not SIP approved because in 2005 the DC Circuit Court vacated portions of the rule pertaining to clean units, PCPs, and remanded portions of the rule regarding recordkeeping. In addition, EPA did not approve Missouri's rule incorporating EPA's 2007 revision of the definition of ''chemical processing plants'' (the ''Ethanol Rule,'') (72 FR 24060, May 1, 2007) or EPA's 2008 ''fugitive emissions rule'' (73 FR 77882, December 19, 2008). Otherwise, Missouri's revisions also incorporate by reference the other provisions of 40 CFR 52.21 as in effect on July 1, 2011.

VIII. What are the additional provisions of the September 5, 2012, SIP submission that EPA is proposing to take action on?

Within Missouri's September 5, 2012, SIP submission, Missouri amended rule 10 CSR 10–6.060 ''Construction Permits Required'' to defer the application of the PSD permitting requirements to carbon dioxide emissions from bioenergy and other biogenic stationary sources pursuant to the July 20, 2011, EPA final rulemaking ''Deferral for Carbon Dioxide (CO_2) Emissions from Bioenergy and other Biogenic Sources Under the Prevention of Significant Deterioration (PSD) and Title V Programs'' (*see* 76 FR 43490). The Biomass Deferral delays until July 21, 2014, the consideration of CO_2 emissions from bioenergy and other biogenic sources (hereinafter referred to as ''biogenic CO_2 emissions'') when determining whether a stationary source meets the PSD and Title V applicability thresholds, including those for the application of Best Available Control Technology (BACT). Stationary sources that combust biomass (or otherwise emit biogenic CO_2 emissions) and construct or modify during the deferral period will avoid the application of PSD to the biogenic CO_2 emissions resulting from those actions. The deferral applies only to biogenic CO_2 emissions and does not affect non-GHG pollutants or other GHG's (e.g., methane (CH_4) and nitrous oxide (N_2O)) emitted from the combustion of biomass fuel. Also, the deferral only pertains to biogenic CO_2 emissions in the PSD and Title V programs and does not pertain to any other EPA programs such as the GHG Reporting Program. Biogenic CO_2 emissions are defined as emissions of CO_2 from a stationary source directly resulting from the combustion or decomposition of biologically-based materials other than fossil fuels and mineral sources of carbon. Examples of ''biogenic CO_2 emissions'' include, but are not limited to:

- CO_2 generated from the biological decomposition of waste in landfills, wastewater treatment or manure management processes;
- CO_2 from the combustion of biogas collected from biological decomposition of waste in landfills, wastewater treatment or manure management processes;
- CO_2 from fermentation during ethanol production or other industrial fermentation processes;
- CO_2 from combustion of the biological fraction of municipal solid waste or biosolids;
- CO_2 from combustion of the biological fraction of tire-derived fuel; and
- CO_2 derived from combustion of biological material, including all types of wood and wood waste, forest residue, and agricultural material.

EPA recognizes that use of certain types of biomass can be part of the national strategy to reduce dependence on fossil fuels. Efforts are underway at the Federal, state and regional level to foster the expansion of renewable resources and promote bioenergy projects when they are a way to address climate change, increase domestic alternative energy production, enhance forest management and create related employment opportunities.

For stationary sources co-firing fossil fuel and biologically-based fuel, and/or combusting mixed fuels (e.g., tire derived fuels, municipal solid waste (MSW)), the biogenic CO_2 emissions from that combustion are included in the biomass deferral. However, the fossil fuel CO_2 emissions are not. Emissions of CO_2 from processing of mineral feedstocks (e.g., calcium carbonate) are also not included in the deferral. Various methods are available to calculate both the biogenic and fossil fuel portions of CO_2 emissions, including those methods contained in the GHG Reporting Program (40 CFR part 98). Consistent with the other pollutants in PSD and Title V, there are no requirements to use a particular method in determining biogenic and fossil fuel CO_2 emissions.

EPA's final biomass deferral rule is an interim deferral for biogenic CO_2 emissions only and does not relieve sources of the obligation to meet the PSD and Title V permitting requirements for other pollutant emissions that are otherwise applicable to the source during the deferral period or that may be applicable to the source at a future date pending the results of EPA's study and subsequent rulemaking action. This means, for example, that if the deferral is applicable to biogenic CO_2 emissions from a particular source during the three-year effective period and the study and potential future rulemaking do not provide for a permanent exemption from PSD and Title V permitting requirements for the biogenic CO_2 emissions from a source with particular characteristics, then the deferral would end for that type of source and its biogenic CO_2 emissions would have to be appropriately considered in any applicability determinations that the source may need to conduct for future stationary source permitting purposes, consistent with the potential subsequent

rulemaking and the Final Tailoring Rule (*e.g.,* a major source determination for Title V purposes or a major modification determination for PSD purposes).

EPA also wishes to clarify that we do not require that a PSD permit issued during the deferral period be amended or that any PSD requirements in a PSD permit existing at the time the deferral took effect, such as BACT limitations, be revised or removed from an effective PSD permit for any reason related to the deferral or when the deferral period expires. The regulation at 40 CFR 52.21(w) requires that any PSD permit shall remain in effect, unless and until it expires or it is rescinded, under the limited conditions specified in that provision. Thus, a PSD permit that is issued to a source while the deferral was effective need not be reopened or amended if the source is no longer eligible to exclude its biogenic CO_2 emissions from PSD applicability after the deferral expires. However, if such a source undertakes a modification that could potentially require a PSD permit and the source is not eligible to continue excluding its biogenic CO_2 emissions after the deferral expires, the source will need to consider its biogenic CO_2 emissions in assessing whether it needs a PSD permit to authorize the modification.

Any future actions to modify, shorten, or make permanent the deferral for biogenic sources are beyond the scope of the biomass deferral action and this proposed approval of the deferral into the Missouri SIP, and will be addressed through subsequent rulemaking. The results of EPA's review of the science related to net atmospheric impacts of biogenic CO_2 and the framework to properly account for such emissions in Title V and PSD permitting programs based on the study are prospective and unknown. Thus, we are unable to predict which biogenic CO_2 sources, if any, currently subject to the deferral as incorporated into the Missouri SIP could be subject to any permanent exemptions, or which currently deferred sources could be potentially required to account for their emissions.

Similar to our approach with the Tailoring Rule, EPA incorporated the biomass deferral into the regulations governing state programs and into the Federal PSD program by amending the definition of ''subject to regulation'' under 40 CFR sections 51.166 and 40 CFR 52.21 respectively. Missouri implements its PSD program by incorporating section 52.21 by reference in its rule 10 CSR 10–6.060 ''Construction Permits Required.'' The Missouri submission incorporates by reference the CFR through July 1, 2011, in order to adopt the Biomass Deferral.

Based upon EPA's analysis of the required provisions of the July 20, 2011, Biomass Deferral rule and how Missouri meets these requirements, EPA is proposing to approve the September 5, 2012, Missouri SIP revision incorporating the Biomass Deferral.

IX. What action is EPA proposing?

EPA proposes to approve the infrastructure SIP submissions from Missouri which address the requirements of CAA sections 110 (a)(1) and (2) as applicable to the 1997 and 2006 NAAQS for $PM_{2.5}$. Based upon review of the State's infrastructure SIP submissions for the 1997 and 2006 $PM_{2.5}$ NAAQS, and relevant statutory and regulatory authorities and provisions referenced in those submissions or referenced in Missouri's SIP, EPA believes that Missouri has the infrastructure to address all applicable required elements of sections 110(a)(1) and(2) (except otherwise noted) to ensure that the 1997 and 2006 $PM_{2.5}$ NAAQS are implemented in the state.

In addition, EPA proposes to approve two additional SIP submissions from Missouri, one addressing the Prevention of Significant Deterioration (PSD) program in Missouri as it relates to $PM_{2.5}$ (unless otherwise noted), and another SIP revision addressing the requirements of section 128 of the CAA, both of which support the requirements associated with infrastructure SIPs.

We are hereby soliciting comment on this proposed action. Final rulemaking will occur after consideration of any comments.

X. Statutory and Executive Order Review

Under the CAA, the Administrator is required to approve a SIP submission that complies with the provisions of the CAA and applicable Federal regulations. 42 U.S.C. 7410(k); 40 CFR 52.02(a). Thus, in reviewing SIP submissions, EPA's role is to approve state choices, provided that they meet the criteria of the CAA. Accordingly, this action merely approves state law as meeting Federal requirements and does not impose additional requirements beyond those imposed by state law. For that reason, this proposed action:

- Is not a ''significant regulatory action'' subject to review by the Office of Management and Budget under Executive Order 12866 (58 FR 51735, October 4, 1993);
- does not impose an information collection burden under the provisions of the Paperwork Reduction Act (44 U.S.C. 3501 *et seq.*);
- is certified as not having a significant economic impact on a substantial number of small entities under the Regulatory Flexibility Act (5 U.S.C. 601 *et seq.*);
- does not contain any unfunded mandate or significantly or uniquely affect small governments, as described in the Unfunded Mandates Reform Act of 1995 (Pub. L. 104–4);
- does not have Federalism implications as specified in Executive Order 13132 (64 FR 43255, August 10, 1999);
- is not an economically significant regulatory action based on health or safety risks subject to Executive Order 13045 (62 FR 19885, April 23, 1997);
- is not a significant regulatory action subject to Executive Order 13211 (66 FR 28355, May 22, 2001);
- is not subject to requirements of Section 12(d) of the National Technology Transfer and Advancement Act of 1995 (15 U.S.C. 272 note) because application of those requirements would be inconsistent with the CAA; and
- does not provide EPA with the discretionary authority to address, as appropriate, disproportionate human health or environmental effects, using practicable and legally permissible methods, under Executive Order 12898 (59 FR 7629, February 16, 1994).

In addition, this rule does not have Tribal implications as specified by Executive Order 13175 (65 FR 67249, November 9, 2000), because the SIP is not approved to apply in Indian country located in the state, and EPA notes that it will not impose substantial direct costs on tribal governments or preempt tribal law.

Statutory Authority

The statutory authority for this action is provided by Section 110 of the CAA, as amended (42 U.S.C. 7410).

List of Subjects in 40 CFR Part 52

Environmental protection, Air pollution control, Incorporation by reference, Intergovernmental relations, Ozone, Particulate matter, Reporting and recordkeeping requirements.

Dated: March 29, 2013.

Karl Brooks,

Regional Administrator, Region 7.

[FR Doc. 2013–08399 Filed 4–9–13; 8:45 am]

BILLING CODE 6560–50–P

ENVIRONMENTAL PROTECTION AGENCY

40 CFR Part 52

[EPA–R02–OAR–2013–0130, FRL–9800–4]

Approval and Promulgation of Implementation Plans; New Jersey; Infrastructure SIP for the 1997 8-Hour Ozone and the 1997 and 2006 Fine Particulate Matter Standards

AGENCY: Environmental Protection Agency (EPA).

ACTION: Proposed rule.

SUMMARY: The Environmental Protection Agency (EPA) is proposing to approve most elements of New Jersey's State Implementation Plan (SIP) revisions submitted to demonstrate that the State meets the requirements of section 110(a)(1) and (2) of the Clean Air Act (CAA) for the 1997 8-hour ozone and the 1997 and 2006 fine particulate matter ($PM_{2.5}$) National Ambient Air Quality Standards (NAAQS). EPA is proposing to conditionally approve certain elements of the submittals, as well as to find that certain elements of New Jersey's submittals do not meet section 110(a)(2) requirements with existing State rules. Section 110(a) of the CAA requires that each state adopt and submit a SIP for the implementation, maintenance and enforcement of each NAAQS promulgated by the EPA and is commonly referred to as an infrastructure SIP.

DATES: Comments must be received on or before May 10, 2013.

ADDRESSES: Submit your comments, identified by Docket ID number EPA–R02–OAR–2013–0130, by one of the following methods:

- *www.regulations.gov:* Follow the on-line instructions for submitting comments.
- Email: *Ruvo.Richard@EPA.GOV.*
- Fax: 212–637–3901.
- Mail: Richard Ruvo, Acting Chief, Air Programs Branch, Environmental Protection Agency, Region 2 Office, 290 Broadway, 25th Floor, New York, New York 10007–1866.
- *Hand Delivery:* Richard Ruvo, Acting Chief, Air Programs Branch, Environmental Protection Agency, Region 2 Office, 290 Broadway, 25th Floor, New York, New York 10007–1866. Such deliveries are only accepted during the Regional Office's normal hours of operation. The Regional Office's official hours of business are Monday through Friday, 8:30 to 4:30 excluding Federal holidays.

Instructions: Direct your comments to Docket ID No. EPA–R02–OAR–2013–0130. EPA's policy is that all comments received will be included in the public docket without change and may be made available online at *www.regulations.gov,* including any personal information provided, unless the comment includes information claimed to be Confidential Business Information (CBI) or other information whose disclosure is restricted by statute. Do not submit information that you consider to be CBI or otherwise protected through *www.regulations.gov* or email. The *www.regulations.gov* Web site is an ''anonymous access'' system, which means EPA will not know your identity or contact information unless you provide it in the body of your comment. If you send an email comment directly to EPA without going through *www.regulations.gov* your email address will be automatically captured and included as part of the comment that is placed in the public docket and made available on the Internet. If you submit an electronic comment, EPA recommends that you include your name and other contact information in the body of your comment and with any disk or CD–ROM you submit. If EPA cannot read your comment due to technical difficulties and cannot contact you for clarification, EPA may not be able to consider your comment. Electronic files should avoid the use of special characters, any form of encryption, and be free of any defects or viruses. For additional information about EPA's public docket visit the EPA Docket Center homepage at *http://www.epa.gov/epahome/dockets.htm.*

Docket: All documents in the docket are listed in the *http://www.regulations.gov* index. Although listed in the index, some information is not publicly available, e.g., CBI or other information whose disclosure is restricted by statute. Certain other material, such as copyrighted material, will be publicly available only in hard copy. Publicly available docket materials are available either electronically in *http://www.regulations.gov* or in hard copy at the Environmental Protection Agency, Region II Office, Air Programs Branch, 290 Broadway, 25th Floor, New York, New York 10007–1866. EPA requests, if at all possible, that you contact the individual listed in the **FOR FURTHER INFORMATION CONTACT** section to view the hard copy of the docket. You may view the hard copy of the docket Monday through Friday, 8 a.m. to 4 p.m., excluding Federal holidays.

FOR FURTHER INFORMATION CONTACT: Paul Truchan, Air Programs Branch, Environmental Protection Agency, 290 Broadway, 25th Floor, New York, New York 10007–1866, (212) 637–4249, or by email at *truchan.paul@epa.gov.*

SUPPLEMENTARY INFORMATION:

I. What action is EPA proposing?
II. What is the background information?
III. What is a section 110(a)(1) and (2) SIP?
IV. What elements are required under section 110(a)(1) and (2)?
V. What did New Jersey submit?
VI. How has the State addressed the elements of the section 110(a)(1) and (2) ''infrastructure'' provisions?
VII. What action is EPA taking?
VIII. Statutory and Executive Order Reviews

I. What Action is EPA Proposing?

EPA is proposing to approve, conditionally approve, and disapprove elements of the State of New Jersey Infrastructure SIP as meeting the section 110(a) infrastructure requirements of the Clean Air Act (CAA) for the 1997 ozone, 1997 $PM_{2.5}$ and 2006 $PM_{2.5}$ National Ambient Air Quality Standards (NAAQS). As explained below, the State has the necessary infrastructure, resources, and general authority to implement the 1997 8-hour ozone and 1997 and 2006 $PM_{2.5}$ standards, except where specifically noted.

II. What is the Background Information?

On July 18, 1997, EPA promulgated new and revised NAAQS for 8-hour ozone (62 FR 38856) and $PM_{2.5}$ (62 FR 38652). The ozone NAAQS are based on 8-hour average concentrations. The 8-hour averaging period replaced the previous 1-hour averaging period, and the level of the NAAQS was changed from 0.12 parts per million (ppm) to 0.08 ppm.[1] The new $PM_{2.5}$ NAAQS established a health-based standard of 15.0 micrograms per cubic meter ($\mu g/m^3$) based on a 3-year average of annual mean $PM_{2.5}$ concentrations, and a 24-hour standard of 65 $\mu g/m^3$ based on a 3-year average of the 98th percentile of 24-hour concentrations. EPA strengthened the 24-hour $PM_{2.5}$ NAAQS from 65 $\mu g/m^3$ to 35 $\mu g/m^3$ on October 17, 2006 (71 FR 61144).[2]

Section 110(a) of the CAA requires states to submit State Implementation Plans (SIPs) that provide for the implementation, maintenance, and enforcement of new or revised NAAQS within three years following the promulgation of such NAAQS.

[1] EPA issued a revised 8-hour ozone standard on March 27, 2008 (73 FR 16436). On September 22, 2011, EPA clarified that the current ozone standard is set at 75 ppb. EPA is not addressing the 2008 ozone NAAQS in this rulemaking.

[2] EPA issued a revised $PM_{2.5}$ standard on January 15, 2013 (78 FR 3086). EPA is not addressing the 2012 $PM_{2.5}$ NAAQS in this rulemaking.

III. What is a section 110(a)(1) and (2) SIP?

Section 110(a)(1) provides the procedural and timing requirements for SIPs. Section 110(a)(2) lists specific elements that states must meet for ''infrastructure'' SIP requirements related to a newly established or revised NAAQS. Sections 110(a)(1) and (2) of the CAA requires, in part, that states submit to EPA plans to implement, maintain and enforce each of the NAAQS promulgated by EPA. EPA interprets this provision to require states to address basic SIP requirements including emission inventories, monitoring, and modeling to assure attainment and maintenance of the standards. By statute, SIPs meeting the requirements of section 110(a)(1) and (2) are to be submitted by states within three years after promulgation of a new or revised standard. These SIPs are commonly called infrastructure SIPs. In 1997, EPA promulgated the 8-hour ozone primary and secondary NAAQS and a new annual and 24-hour $PM_{2.5}$ NAAQS. Intervening litigation over the 1997 standards caused a delay in SIP submittals. In 2006, EPA promulgated a new 24-hour $PM_{2.5}$ NAAQS.

IV. What elements are required under section 110(a)(1) and (2)?

The infrastructure requirements are listed in EPA's October 2, 2007, memorandum entitled ''Guidance on SIP Elements Required Under Section 110(a)(1) and (2) for the 1997 8-Hour Ozone and $PM_{2.5}$ National Ambient Air Quality Standards'' and September 25, 2009, memorandum entitled ''Guidance on SIP Elements Required Under Section 110(a)(1) and (2) for the 2006 24-Hour Fine Particle ($PM_{2.5}$) National Ambient Air Quality Standards.'' [3] The 14 elements required to be addressed are as follows: (1) Emission limits and other control measures; (2) ambient air quality monitoring/data system; (3) program for enforcement of control measures; (4) interstate transport; (5) adequate resources; (6) stationary source monitoring system; (7) emergency power; (8) future SIP revisions; (9) consultation with government officials; (10) public notification; (11) prevention of significant deterioration (PSD) and visibility protection; (12) air quality modeling/data; (13) permitting fees, and (14) consultation/participation by affected local entities.

Two elements identified in section 110(a)(2) are not governed by the 3 year submission deadline of section 110(a)(1) because SIPs incorporating necessary local nonattainment area controls are not due within 3 years after promulgation of a new or revised NAAQS, but rather due at the time that the nonattainment area plan requirements are due pursuant to section 172. See 77 FR 46354 (August 3, 2012); 77 FR 60308 (October 3, 2012) (footnote 1). These requirements are: (1) Submissions required by section 110(a)(2)(C) to the extent that subsection refers to a permit program as required in part D Title I of the CAA, and (2) submissions required by section 110(a)(2)(I) which pertain to the nonattainment planning requirements of part D, Title I of the CAA. As a result, this action does not address the above infrastructure elements related to section 110(a)(2)(C) or 110(a)(2)(I).

This action also does not address the requirements of section 110(a)(2)(D)(i) for the 1997 ozone and 1997 $PM_{2.5}$ NAAQS, since they had been addressed in previous rulemakings. See October 1, 2007 (72 FR 55666). Additionally, this action does not address the requirements of section 110(a)(2)(D)(i)(I) for the 2006 $PM_{2.5}$ NAAQS, which was addressed in a previous EPA rulemaking. See July 20, 2011 (76 FR 43153).

Scope of Infrastructure SIPs

This rulemaking will not cover four substantive issues that are not integral to acting on a state's infrastructure SIP submission: (i) Existing provisions related to excess emissions during periods of start-up, shutdown, or malfunction (''SSM'') at sources, that may be contrary to the CAA and EPA's policies addressing such excess emissions; (ii) existing provisions related to ''director's variance'' or ''director's discretion'' that purport to permit revisions to SIP approved emissions limits with limited public process or without requiring further approval by EPA, that may be contrary to the CAA (''director's discretion''); (iii) existing provisions for minor source NSR programs that may be inconsistent with the requirements of the CAA and EPA's regulations that pertain to such programs (''minor source NSR''); and, (iv) existing provisions for PSD programs that may be inconsistent with current requirements of EPA's ''Final NSR Improvement Rule,'' 67 FR 80186 (December 31, 2002), as amended by 72 FR 32526 (June 13, 2007) (''NSR Reform''). A detailed rationale for why these four substantive issues are not part of the scope of infrastructure SIP rulemakings can be found in EPA's July 13, 2011, final rule entitled, ''Approval and Promulgation of Air Quality Implementation Plans; Illinois; Indiana; Michigan; Minnesota; Ohio; Wisconsin; Infrastructure SIP Requirements for the 1997 8-hour Ozone and $PM_{2.5}$ National Ambient Air Quality Standards'' in the section entitled, ''What is the scope of this final rulemaking?'' (76 FR 41075 at 41076–41079).

V. What did New Jersey Submit?

EPA is acting on two New Jersey SIP submittals, dated February 25, 2008 and January 15, 2010, which address the section 110 infrastructure requirements for the three NAAQS: The 1997 8-hour ozone NAAQS, the 1997 annual and 24-hour $PM_{2.5}$ NAAQS, and the 2006 24-hour $PM_{2.5}$ NAAQS.

February 25, 2008 SIP submission

New Jersey's section 110 infrastructure submittal was submitted by the New Jersey Department of Environmental Protection (NJDEP) on February 25, 2008 and addressed the 1997 8-hour ozone and fine particulate matter ($PM_{2.5}$) NAAQS. Effective April 28, 2008, the submittal was determined to be complete for all elements except 110(a)(2)(C). 73 FR 16205 (March 27, 2008). New Jersey's February 2008 section 110 submittal demonstrates how the State, where applicable, has a plan in place that meets the requirements of section 110 for the 1997 8-hour ozone and $PM_{2.5}$ NAAQS. This plan references the current New Jersey Air Quality SIP, the New Jersey Statutes Annotated (NJSA) and/or the New Jersey Administrative Code (NJAC). The NJSA, and NJAC (air pollution control regulations) referenced in the submittal are publicly available. Prior to submitting to EPA, NJDEP held a public hearing, on January 28, 2008, on New Jersey's 110 infrastructure submittal and accepted written comments until January 31, 2008. The New Jersey SIP was subject to public notice and comment and a public hearing when adopted. New Jersey air pollution control regulations that have been previously approved by EPA and incorporated into the New Jersey SIP can be found at 40 CFR 52.1605 and are posted on the Internet at: *http://www.epa.gov/region02/air/sip/nj_reg.htm.*

January 15, 2010 SIP submission

New Jersey's section 110 infrastructure submittal for the 2006

[3] ''Guidance on SIP Elements Required Under Sections 110(a)(1) and (2) for the 1997 8-hour Ozone and $PM_{2.5}$ National Ambient Air Quality Standards'' at *http://www.epa.gov/ttn/oarpg/t1/memoranda/110a_sip_guid_fin100207.pdf* ''Guidance on SIP Elements Required Under Sections 110(a)(l) and (2) for the 2006 24-Hour Fine Particle ($PM_{2.5}$) National Ambient Air Quality Standards (NAAQS)'' *http://www.epa.gov/ttn/oarpg/t1/memoranda/20090925_harnett_pm25_sip_110a12.pdf.*

$PM_{2.5}$ 24-hour NAAQS was submitted by the New Jersey Department of Environmental Protection (NJDEP) on January 15, 2010, and the submittal was deemed complete July 15, 2010.

EPA's evaluation of both submittals is detailed in the ''Technical Support Document for EPA's Proposed Rulemaking for the New Jersey State Implementation Plan Revision: State Implementation Plan Revision For Meeting the Infrastructure Requirements In the Clean Air Act Dated February 2008 and January 2010'' (TSD). As explained in the **ADDRESSES** section of this action, the TSD is available in the docket (EPA–R02–OAR–2013–0130) for this action and at the EPA Region 2 Office.

VI. How has the State addressed the elements of the section 110(a)(1) and (2) ''infrastructure'' provisions?

A. Emission limits and other control measures: Section 110(a)(2)(A) requires SIPs to include enforceable emission limits and other control measures, means, or techniques, and schedules for compliance. EPA notes that the specific nonattainment area plan requirements of section 110(a)(2)(I) are subject to the timing requirement of section 172, not the timing requirement of section 110(a)(1). New Jersey's Air Pollution Control Act (Pub. L.1954), codified at NJSA 26:2C, provides the NJDEP with power to formulate and promulgate, amend and repeal codes and rules and regulations, preventing, controlling and prohibiting air pollution throughout the State at NJSA 26:2C–8. The federally enforceable New Jersey SIP contains enforceable emission limits and other control measures. EPA is proposing to determine that New Jersey has met the requirements of section 110(a)(2)(A) of the Act with respect to the 1997 8-hour ozone and the 1997 and 2006 $PM_{2.5}$ NAAQS.

B. Ambient air quality monitoring/data system: Section 110(a)(2)(B) requires SIPs to include provisions to provide for establishment and operation of ambient air quality monitors, to monitor, compile and analyze ambient air quality data, and to make these data available to EPA upon request. New Jersey, under its authority provided in NJSA 26:2C–9.a, operates and maintains a network of ambient air quality monitors and submits the data collected to EPA. New Jersey has submitted annual air monitoring network plans which have been approved by EPA. The most recent was approved by EPA on March 29, 2013. EPA is proposing to determine that the New Jersey SIP meets the requirements of section 110(a)(2)(B) of the Act with respect to the 1997 8-hour ozone and the 1997 and 2006 $PM_{2.5}$ NAAQS.

C. Program for enforcement of control measures: Section 110(a)(2)(C) requires states to have a plan that includes a program providing for enforcement of all SIP measures and the regulation of the modification and construction of any stationary source, including a program to meet Prevention of Significant Deterioration (PSD) and minor source new source review.

The NJDEP is authorized by NJSA 26:2C–19 to enforce its control measures and the air permitting program for stationary sources. The minor source permitting and enforcement programs operate under NJAC 7:27 and 7:27A, respectively. EPA proposes to find that the State has adequate authority and regulations to insure that SIP approved control measures are enforced for the 1997 8-hour ozone and 1997 and 2006 $PM_{2.5}$ NAAQS.

New Jersey's is currently subject to 40 CFR 52.1603 with respect to the PSD permit program required by Part C of the Act. As a result, a Federal Implementation Plan (FIP) includes 40 CFR 52.21 as part of the New Jersey applicable State plan. New Jersey has been delegated authority to implement 40 CFR 52.21 and has been successfully implementing the program. Because New Jersey does not have its own State adopted rule, its infrastructure submissions are not approvable with respect to this element. However, the State is not subject to mandatory sanctions solely as a result of this type of infrastructure SIP deficiency, since the SIP deficiency is neither with respect to a submittal that is required under part D nor in response to a SIP call under section 110(k)(5) of the CAA. Moreover, the requirements for which the State is subject to the FIP are already satisfied by the incorporation by reference of the provisions of 40 CFR 52.21 into a FIP for New Jersey, and so EPA has no additional FIP obligations under section 110(c).

EPA proposes to find that the State has adequate authority and regulations to ensure that SIP-approved control measures are enforced. EPA also finds that, based on the delegation of 40 CFR 52.21, New Jersey has the delegated authority to regulate the construction of new or modified stationary sources to meet the PSD program requirements. Though New Jersey satisfies the requirement to regulate the construction of new or modified sources through PSD delegation, since New Jersey's PSD program is a federally delegated program, New Jersey has not satisfied the requirements of sections 110(a)(2)(C) and (J) for all three NAAQS to have a state adopted program and the currently existing FIP remains in place.

D. Interstate transport: Section 110(a)(2)(D) is divided into two subsections, 110(a)(2)(D)(i) and 110(a)(2)(D)(ii). Section 110(a)(2)(D)(i) consists of two subsections (I) and (II), each of which has two ''prongs.'' The two prongs under 110(a)(2)(D)(i)(I) prohibit any source or other type of emissions activity within the State from emitting any air pollutants in amounts which will (prong 1) contribute significantly to nonattainment in any other state with respect to any primary or secondary NAAQS, and (prong 2) interfere with maintenance by any other state with respect to any primary or secondary NAAQS. The two prongs under 110(a)(2)(D)(i)(II) prohibit any source or other type of emissions activity within the state from emitting any air pollutants in amounts which will interfere with measures required to be included in the applicable implementation plan for any other state under part C (prong 3) to prevent significant deterioration of air quality or (prong 4) to protect visibility.

Section 110(a)(2)(D)(ii) addresses interstate and international pollution abatement, and requires SIPs to include provisions insuring compliance with sections 115 and 126 of the Act, relating to interstate and international pollution abatement.

In this action for New Jersey, with respect to section 110(a)(2)(D)(i), we are only addressing prong 3 (i.e., interference with PSD) and prong 4 (i.e., to protect visibility) of 110(a)(2)(D)(i)(II). EPA previously took rulemaking action on prong 1 and prong 2 on October 1, 2007 (72 FR 55666) and July 20, 2011 (76 FR 43153), respectively. For prong 3, as discussed previously under (C) (Program for enforcement of control measures), New Jersey is currently subject to a PSD FIP. A state's infrastructure SIP submittal cannot be considered for approvability with respect to prong 3 until EPA has issued final approval of that state's PSD SIP or, alternatively, has issued final approval of a SIP that EPA has otherwise found adequate to prohibit interference with other state's measures to prevent significant deterioration of air quality. Therefore, we are proposing to disapprove New Jersey's 110(a) submissions for the 1997 8-hour ozone and 1997 and 2006 $PM_{2.5}$NAAQS for prong 3 of 110(a)(2)(D)(i)(II) because New Jersey is currently subject to a PSD FIP and does not have a PSD SIP. This disapproval will not trigger any sanctions or additional FIP obligation, since a FIP is already in place. This action will have no discernible effect on

the implementation of the PSD program in New Jersey, as the State is implementing a well-established PSD program through EPA delegation.

For prong 4, New Jersey has met its obligations pursuant to section 110(a)(2)(D)(i)(II) for visibility protection for all three NAAQS through its Regional Haze SIP submittals, which were approved by EPA on January 3, 2012, **Federal Register** (77 FR 19). The regional haze rule specifically requires that a state participating in a regional planning process include all measures needed to achieve its apportionment of emission reduction obligations agreed upon through that process. Thus, New Jersey's approved regional haze SIP will ensure that emissions from sources within the State are not interfering with measures to protect visibility in other states. Therefore, EPA proposes to find for the 1997 8-hour ozone and 1997 and 2006 $PM_{2.5}$ NAAQS that NJDEP satisfies the section 110(a)(2)(D)(i)(II) requirement for visibility.

Regarding section 110(a)(2)(D)(ii), which relates to interstate and international pollution abatement, as noted above, New Jersey is subject to a PSD FIP. States relying on the Federal PSD program requirements of 40 CFR 52.21(q), (which provide for notification of affected state and local air agencies) to satisfy this requirement have programs that are considered technically deficient and not approvable. Therefore, we are proposing to disapprove New Jersey's submissions for infrastructure element 110(a)(2)(D)(ii) for the 1997 8-hour ozone and 1997 and 2006 $PM_{2.5}$ NAAQS. This disapproval will not trigger any sanctions or additional FIP obligation. It should be noted, that New Jersey has no pending obligations under section 115 or 126(b) of the Act and satisfies these requirements of section 110(a)(2)(D)(ii) for the 1997 8-hour ozone and 1997 and 2006 $PM_{2.5}$ NAAQS.

E. Adequate resources: Section 110(a)(2)(E) requires each state to provide (i) necessary assurances that the state will have adequate personnel, funding, and authority under state law to carry out the SIP (and is not prohibited by any provision of federal or state law from carrying out the SIP or portion thereof), (ii) requires that the state comply with the requirements respecting state boards under section 128, and (iii) necessary assurances that, where the state has relied on a local or regional government, agency, or instrumentality for the implementation of any SIP provision, the state has responsibility for ensuring adequate implementation of such SIP provision.

New Jersey has adequate authority, under NJSA 13:1D–9, to carry out its SIP obligations with respect to the 1997 ozone and 1997 and 2006 $PM_{2.5}$ NAAQS. New Jersey receives sections 103 and 105 grant funds through its Performance Partnership Grant along with required State-matching funds to provide funding necessary to carry out its SIP requirements. Therefore, EPA proposes to find New Jersey has sufficient resources to meet the requirements of section 110(a)(2)(E)(i) for the 1997 8-hour ozone and 1997 and 2006 $PM_{2.5}$ NAAQS.

Congress added section 128 in the 1977 amendments. Titled ''State boards,'' section 128 provides in relevant part: ''(a) Not later than the date one year after August 7, 1977, each applicable implementation plan shall contain requirements that: (1) Any board or body which approves permits or enforcement orders under this chapter shall have at least a majority of members who represent the public interest and do not derive any significant portion of their income from persons subject to permits or enforcement orders under this chapter, and (2) any potential conflicts of interest by members of such board or body or the head of an executive agency with similar powers be adequately disclosed.'' New Jersey does not have a state board that approves permits or enforcement orders under the CAA. Instead, permits and enforcement orders are approved by the State's Commissioner of Environmental Protection. Thus, the requirements of subsection 128(a)(1) are not applicable to New Jersey. New Jersey is subject to the requirements of section 128(a)(2). In its SIP submission New Jersey cited NJSA 52:13D–12 et seq. which addresses the conflict of interest requirement. EPA proposes to conditionally approve the infrastructure SIP in fulfilling the requirements of section 110(a)(2)(E)(ii) for the 1997 8-hour ozone and 1997 and 2006 $PM_{2.5}$ NAAQS provided the State submits, for approval into the SIP, those statutes or regulations necessary to substantively meet the requirements of CAA section 128(a)(2).

Section 110(a)(2)(E)(iii) requires states to provide necessary assurances that, where the state has relied on a local or regional government, agency or instrumentality for the implementation of any provision of the SIP, the state has responsibility for ensuring adequate implementation of the SIP provision. The NJDEP has the authority to delegate inspection and enforcement efforts for various regulations under the County Environmental Health Act (NJSA 26:3A2–21 et seq.). EPA in the past identified a deficiency in meeting this requirement. See 40 CFR 52.1579 Intergovernmental cooperation.

While New Jersey has the authority to delegate responsibilities to county or local governments to implement certain SIP responsibilities, the information provided in both infrastructure SIP submittals does not identify the specific organizations that will participate in developing, implementing, and enforcing the plan and the responsibilities of such organizations. EPA proposes to conditionally approve the infrastructure SIP with regard to the requirements of section 110(a)(2)(E)(iii). The State must identify the county or local governments or entities such as metropolitan planning organizations (MPOs) that participate in the SIP planning efforts, identify the county or local governments or entities that have been delegated responsibilities to implement or enforce portions of the SIP, and provide copies of the agreements or memoranda of understanding (MOUs) between the State and the county or local governments or entities. Since it is EPA's understanding that this deficiency involves information that exists but was not provided in the SIP submittal, EPA proposes to conditionally approve section 110(a)(2)(E)(iii) for the 1997 8-hour ozone and 1997 and 2006 $PM_{2.5}$ NAAQS. In the alternative, should New Jersey provide this information before we take final rulemaking, EPA will fully approve section 110(a)(2)(E)(iii) and remove 40 CFR 52.1579.

F. Stationary source monitoring system: Section 110(a)(2)(F) requires states to establish a system to monitor emissions from stationary sources and to submit periodic emission reports. The NJDEP has the authority pursuant to NJSA 26:2C–9.2 to require emissions monitoring of stationary sources before an operating permit is issued or renewed. NJDEP has adopted regulations to implement the federal requirements for stationary source emissions monitoring and reporting in NJAC 7:27–8 and 7:27–22.

The NJDEP has the authority pursuant to NJSA 26:2C–9 to require emissions reports from stationary sources and to allow emission information to be made available to the public.

EPA previously disapproved inclusion of NJSA 26:2C–9 into the SIP finding that, in some circumstances, it could prohibit the disclosure of emission data to the public. See 40 CFR 52.1575. In 1995 New Jersey revised NJSA 26:2C–9, specifically NJSA 26:2C–9b.(4) to limit what information could

be considered confidential and specifically added the phrase ''other than actual or allowable air contaminant emissions'' to clarify what cannot be considered confidential. N.J. ALS 188. The same legislation, established authority for New Jersey to require individuals responsible for operations that emit air pollution, to file emission statements. The NJDEP has adopted and EPA has approved NJAC 7:27, Subchapter 21—''Emission Statements'' as part of the applicable SIP. See 69 FR 46104 (August 2, 2004).

Based on the revisions to the New Jersey Air Pollution Control Act and the adoption of the Subchapter 21—''Emission Statements,'' EPA is proposing to find that New Jersey has met the requirements of section 110(a)(2)(F) for the 1997 8-hour ozone and 1997 and 2006 $PM_{2.5}$ NAAQS and is proposing to revoke 40 CFR 52.1575.

G. Emergency power: Section 110(a)(2)(G) requires states to provide for authority to address activities causing imminent and substantial endangerment to public health, including contingency plans to implement the emergency episode provisions in their SIPs.

For $PM_{2.5}$, EPA's guidance dated September 25, 2009[4] provides clarification that states that have air quality control regions identified as either Priority I, Priority IA or Priority II by the ''Prevention of Air Pollution Emergency Episodes'' rules at 40 CFR 51.150 must develop emergency episode contingency plans. States are required to develop emergency episode plans for any area that has monitored and recorded 24-hour $PM_{2.5}$ levels greater than 140.4 $\mu g/m^3$ since 2006. A state that has never exceeded this level since 2006 is considered to be Priority III. See 40 CFR 51.150(f). In accordance with the guidance, for a Priority III area a state may certify that it has appropriate general emergency powers to address $PM_{2.5}$-related episodes, and is not required to adopt specific emergency episode plans at this time, given the existing monitored levels.

Since 2006 air-quality monitors in New Jersey show that $PM_{2.5}$ levels have been below the 140.5 $\mu g/m^3$ threshold. New Jersey certified in its infrastructure submittals that it should be classified as a Priority III region and, therefore, emergency episode plans for $PM_{2.5}$ are not required. Therefore, New Jersey has met the requirements of section 110(a)(2)(G) for both the 1997 and 2006 $PM_{2.5}$ NAAQS.

In general and for the 1997 ozone standard, the section 110(a)(2)(G) requirements are addressed by New Jersey's Air Pollution Emergency Control Act (NJSA 26:2C–26 et seq.), which is implemented through NJAC 7:27–12 ''Prevention and Control of Air Pollution Emergencies.'' While the New Jersey SIP contains Subchapter 12, it is not the current version of the State rule. In addition, Subchapter 12 requires that the NJDEP publish in the New Jersey Register the emergency criteria that will be used in making alerts, warnings or emergencies. NJDEP has not provided the criteria. Therefore, EPA is proposing to condition its approval based on NJDEP submitting, for approval into the SIP, the current version of Subchapter 12 and the emergency criteria levels that will be used.

H. Future SIP revisions: Section 110(a)(2)(H) requires states to have the authority to revise their SIPs in response to changes in the NAAQS, availability of improved methods for attaining NAAQS, and in response to an EPA finding that the SIP is substantially inadequate.

The NJDEP is given the authority by NJSA 13:1D–9 to formulate comprehensive policies ''for the conservation of the natural resources of the State, the promotion of environmental protection and the prevention of pollution of the environment of the State.'' EPA proposes to find that the State has adequate authority to develop and implement plans and programs that fulfills the requirements of section 110(a)(2)(H) for the 1997 8-hour ozone and 1997 and 2006 $PM_{2.5}$ NAAQS.

I. Nonattainment Area Plans Under Part D: Section 110(a)(2)(I) of the CAA requires that each such plan shall ''in the case of a plan or plan revision for an area designated as a nonattainment area, meet the applicable requirements of part D of this subchapter (relating to nonattainment areas).'' EPA is not evaluating nonattainment-related provisions, the NSR program required by part D in section 110(a)(2)(C) and measures for attainment required by section 110(a)(2)(I), as part of the infrastructure SIPs because, as discussed elsewhere in this proposal, these submittals have been addressed by other SIP revisions which EPA has or will be acting on in other rulemakings.

J. Consultation With Government Official, Public Notification, PSD, and Visibility Protection: Section 110(a)(2)(J) requires states to meet the applicable requirements of CAA section 121, relating to consultation, CAA section 127, relating to public notification, and CAA title I, part C, relating to the prevention of significant deterioration of air quality and visibility protection.

Consultation With Government Officials

Section 121 requires a process for consultation with local governments and Federal Land Managers carrying out NAAQS implementation requirements. EPA finds that the 110(a) submittals from New Jersey, and the cited authority of NJSA 26:2C–8 and 9, meet the requirements of section 110(a)(2)(J) for consultation with government officials.

Public Notification

Section 127 requires that the state plan include measures to effectively notify the public of any NAAQS exceedances, advise the public of health hazards associated with such pollution, and include measures to enhance public awareness of measures that can be taken to prevent exceedances.

New Jersey is a partner participating in EPA's AIRNOW and EnviroFlash Air Quality Alert programs. (See *www.airnow.gov.*) EPA is proposing to find that New Jersey's SIP submittal has met the public notification requirements of section 110(a)(2)(J) for the 1997 8-hour ozone and 1997 and 2006 $PM_{2.5}$ NAAQS. See NJSA 26:2C–9.

PSD

Section 110(a)(2)(J) also requires states to meet applicable requirements of Part C related to prevention of significant deterioration and visibility protection. EPA evaluated this requirement in the context of section 110(a)(2)(C) with respect to permitting (see discussion under (C) (program for enforcement of control measures)). EPA interprets this section 110 provision relating to visibility as not being ''triggered'' by a new NAAQS because the visibility requirements in part C are not changed by a new NAAQS.

New Jersey is currently subject to a PSD FIP, as discussed under (C) (Program for enforcement of control measures). The approvability of a state's PSD program in its entirety is essential to the approvability of the infrastructure SIP with respect to section 110(a)(2)(J). Until the State provides such a program, the New Jersey infrastructure SIP is not approvable with respect to section 110(a)(2)(J). Therefore, EPA proposes to disapprove New Jerseys' infrastructure SIP with respect to the PSD sub-element of 110(a)(2)(J) for the 1997 8-hour ozone and 1997 and 2006 $PM_{2.5}$ NAAQS. However, as noted in sections C and D, above, this disapproval does not impose any sanctions or new FIP obligations.

[4] See Guidance on SIP Elements Required Under Sections 110(a)(l) and (2) for the 2006 24-Hour Fine Particle ($PM_{2.5}$) National Ambient Air Quality Standards (NAAQS), from William T. Harnett, Director, Air Quality Policy Division, Office of Air Quality Planning and Standards, dated September 25, 2009.

K. Air quality and modeling/data: Section 110(a)(2)(K) requires that SIPs provide for air quality modeling for predicting effects on air quality of emissions from any NAAQS pollutant and submission of such data to EPA upon request.

The infrastructure submittals from New Jersey reference regulations that have provisions for performing air-quality modeling, including modeling for attainment plans, permits, and redesignation requests. NJAC 7:27–8.5 and 22.8. EPA proposes to find that the State has adequate authority to perform air quality modeling that fulfills the requirements of section 110(a)(2)(K).

L. Permitting fees: Section 110(a)(2)(L) requires SIPs to require each major stationary source to pay permitting fees to cover the cost of reviewing, approving, implementing and enforcing a permit, until such time as the SIP fee requirement is superseded by EPA's approval of the State's Title V operating permit program. EPA's full approval of the title V program for New Jersey became effective on November 30, 2001. 66 FR 63168 (December 5, 2001). Before EPA can grant full approval, a state must demonstrate the ability to collect adequate fees. New Jersey's title V program included a demonstration that the State will collect a fee from title V sources above the presumptive minimum in accordance with 40 CFR 70.9(b)(2)(i). The State collects sufficient fees to administer its title V permit program. EPA proposes to find that the State has meet the requirements for section 110(a)(2)(L).

M. Consultation/participation by affected local entities: Section 110(a)(2)(M) requires states to provide for consultation and participation in SIP development by local political subdivisions affected by the SIP. EPA proposes to find that the State has adequate authority and procedures that fulfills the requirements of section 110(a)(2)(M). See NJSA 26:2C–8 and 52:14B.

VII. What action is EPA taking?

EPA is proposing to approve New Jersey's submittals as fully meeting the infrastructure requirements for the 1997 8-hour ozone and the 1997 and 2006 $PM_{2.5}$ NAAQS for the following section 110(a)(2) elements and sub-elements: (A), (B), (C) (as it relates to the enforcement of SIPs), (D)(i)(II) prong 4 (visibility), (E)(i), (F), (H), (J) (consultation), (J) (public notification), (K), (L), and (M). EPA is also proposing to find that New Jersey has met the confidentiality requirements of section 110(a)(2)(F) and is proposing to remove 40 CFR 52.1574 and 40 CFR 52.1575.

EPA is proposing to disapprove New Jersey's submittals for the 1997 8-hour ozone and 1997 and 2006 $PM_{2.5}$ NAAQS section 110(a)(2) sub-elements: (C), prong 3 of (D)(i)(II), and (J) as they relate to the State's lack of a state adopted PSD program, as well as (D)(ii), which relates to interstate and international pollution abatement and PSD. However, these disapprovals will not trigger any sanctions or additional FIP obligation since a PSD FIP is already in place.

EPA is proposing to conditionally approve New Jersey's submittals for the 1997 8-hour ozone and 1997 and 2006 $PM_{2.5}$ NAAQS for the following 110(a)(2) elements and sub-elements: E(ii) (conflict of interest provisions), E(iii) (delegations), and for the 1997 8-hour ozone element (G) (emergency powers). New Jersey must commit in writing on or before May 10, 2013 to correct the deficiencies discussed above. New Jersey must then correct the deficiencies and submit them to EPA within one year of EPA's final action on this SIP action. Some of the deficiencies involve providing information that EPA is familiar with and believes currently exists, but was not included in the State's submittal. Should New Jersey provide this information before we take final rulemaking, EPA is also proposing in the alternative to fully approve: Section 110(a)(2)(E)(ii), section 110(a)(2)(E)(iii) and remove 40 CFR 52.1579, and section 110(a)(2)(G).

Under section 110(k)(4) of the Act, EPA may conditionally approve a plan based on a commitment from a State to adopt specific enforceable measures by a date certain, but not later than one year from the date of approval. If EPA conditionally approves the commitment in a final rulemaking action, the State must meet its commitment to complete requirements of each section 110(a)(2) element listed above. If New Jersey fails to do so for any section 110(a)(2) element, our conditional approval of that element will, by operation of law, become a disapproval for New Jersey one year from the date of final approval. EPA will notify the State by letter that this action has occurred. At that time, this commitment will no longer be a part of the approved SIP for New Jersey. EPA subsequently will publish a document in the **Federal Register** notifying the public that the conditional approval automatically converted to a disapproval. If New Jersey meets its commitments within the applicable time frame, the conditionally approved submission will remain a part of the SIP or SIPs until EPA takes final action approving or disapproving the element in question.

If EPA disapproves a State's new submittal, the conditionally approved section 110(a)(2) element will also be disapproved at that time. If EPA approves the submittal, the section 110(a)(2) element will be fully approved in its entirety and replace the conditionally approved 110(a)(2) element in the SIP. Finally, if, based on information received before EPA takes final action on this proposal, EPA determines that it cannot issue a final conditional approval for one or more elements for which EPA has proposed a conditional approval, then EPA will instead issue a disapproval for such elements.

As discussed in section I, above, EPA is not acting on New Jersey's submittal as it relates to nonattainment provisions, the NSR program required by part D in section 110(a)(2)(C) and the measures for attainment required by section 110(a)(2)(I), as part of the infrastructure SIPs because these submittals have been addressed by other SIP revisions which EPA has or will be acting on in other rulemakings.

EPA is soliciting public comments on the issues discussed in this proposal. These comments will be considered before EPA takes final action. Interested parties may participate in the Federal rulemaking procedure by submitting written comments to the EPA Regional Office listed in the **ADDRESSES** section of this **Federal Register**, or by submitting comments electronically, by mail, or through hand delivery or courier following the directions in the **ADDRESSES** section of this **Federal Register**.

VIII. Statutory and Executive Order Reviews

Under the Clean Air Act, the Administrator is required to approve a SIP submission that complies with the provisions of the Act and applicable Federal regulations. 42 U.S.C. 7410(k); 40 CFR 52.02(a). Thus, in reviewing SIP submissions, EPA's role is to approve state choices, provided that they meet the criteria of the Clean Air Act. Accordingly, this action merely approves state law as meeting Federal requirements and does not impose additional requirements beyond those imposed by state law. For that reason, this action:

- Is not a ''significant regulatory action'' subject to review by the Office of Management and Budget under Executive Order 12866 (58 FR 51735, October 4, 1993);
- Does not impose an information collection burden under the provisions of the Paperwork Reduction Act (44 U.S.C. 3501 *et seq.*);

• Is certified as not having a significant economic impact on a substantial number of small entities under the Regulatory Flexibility Act (5 U.S.C. 601 *et seq.*);

• does not contain any unfunded mandate or significantly or uniquely affect small governments, as described in the Unfunded Mandates Reform Act of 1995 (Pub. L. 104–4);

• Does not have Federalism implications as specified in Executive Order 13132 (64 FR 43255, August 10, 1999);

• Is not an economically significant regulatory action based on health or safety risks subject to Executive Order 13045 (62 FR 19885, April 23, 1997);

• Is not a significant regulatory action subject to Executive Order 13211 (66 FR 28355, May 22, 2001);

• Is not subject to requirements of section 12(d) of the National Technology Transfer and Advancement Act of 1995 (15 U.S.C. 272 note) because application of those requirements would be inconsistent with the Clean Air Act; and

• Does not provide EPA with the discretionary authority to address, as appropriate, disproportionate human health or environmental effects, using practicable and legally permissible methods, under Executive Order 12898 (59 FR 7629, February 16, 1994).

In addition, this rule does not have tribal implications as specified by Executive Order 13175 (65 FR 67249, November 9, 2000), because the SIP is not approved to apply in Indian country located in the state, and EPA notes that it will not impose substantial direct costs on tribal governments or preempt tribal law.

List of Subjects in 40 CFR Part 52

Environmental protection, Air pollution control, Incorporation by reference, Intergovernmental relations, Nitrogen dioxide, Ozone, Particulate matter, Reporting and recordkeeping requirements, Volatile organic compounds.

Authority: 42 U.S.C. 7401 *et seq.*

Dated: April 1, 2013.

Judith A. Enck,

Regional Administrator, Region 2.

[FR Doc. 2013–08238 Filed 4–9–13; 8:45 am]

BILLING CODE 6560–50–P

ENVIRONMENTAL PROTECTION AGENCY

40 CFR Part 52

[EPA–R02–OAR–2013–0180, FRL–9800–3]

Approval and Promulgation of Implementation Plans; New York State Ozone Implementation Plan Revision

AGENCY: Environmental Protection Agency (EPA).

ACTION: Proposed rule.

SUMMARY: The Environmental Protection Agency (EPA) is proposing to approve a revision to the New York State Implementation Plan (SIP) for ozone concerning the control of oxides of nitrogen. The proposed SIP revision consists of amendments to Title 6 of the New York Codes, Rules and Regulations Part 200, ''General Provisions,'' Part 212, ''General Process Emission Sources,'' Part 220, ''Portland Cement Plants and Glass Plants,'' and Subpart 227–2, ''Reasonably Available Control Technology (RACT) For Major Facilities of Oxides of Nitrogen (NOx).'' The intended effect of this action is to approve control strategies, required by the Clean Air Act, which will result in emission reductions that will help attain and maintain the national ambient air quality standards for ozone.

DATES: Comments must be received on or before May 10, 2013.

ADDRESSES: Submit your comments, identified by Docket Number EPA–R02–OAR–2013–0180, by one of the following methods:

• *www.regulations.gov:* Follow the on-line instructions for submitting comments.

• *Email: Ruvo.Richard@epa.gov.*

• *Fax:* 212–637–3901.

• *Mail:* Richard Ruvo, Acting Chief, Air Programs Branch, Environmental Protection Agency, Region 2 Office, 290 Broadway, 25th Floor, New York, New York 10007–1866.

• *Hand Delivery:* Richard Ruvo, acting Chief, Air Programs Branch, Environmental Protection Agency, Region 2 Office, 290 Broadway, 25th Floor, New York, New York 10007–1866. Such deliveries are only accepted during the Regional Office's normal hours of operation. The Regional Office's official hours of business are Monday through Friday, 8:30 to 4:30 excluding federal holidays.

Instructions: Direct your comments to Docket No. EPA–R02–OAR–2013–0180. EPA's policy is that all comments received will be included in the public docket without change and may be made available online at *www.regulations.gov,* including any personal information provided, unless the comment includes information claimed to be Confidential Business Information (CBI) or other information whose disclosure is restricted by statute. Do not submit information that you consider to be CBI or otherwise protected through *www.regulations.gov* or email. The *www.regulations.gov* Web site is an ''anonymous access'' system, which means EPA will not know your identity or contact information unless you provide it in the body of your comment. If you send an email comment directly to EPA without going through *www.regulations.gov* your email address will be automatically captured and included as part of the comment that is placed in the public docket and made available on the Internet. If you submit an electronic comment, EPA recommends that you include your name and other contact information in the body of your comment and with any disk or CD–ROM you submit. If EPA cannot read your comment due to technical difficulties and cannot contact you for clarification, EPA may not be able to consider your comment. Electronic files should avoid the use of special characters or any form of encryption, and be free of any defects or viruses. For additional information about EPA's public docket visit the EPA Docket Center homepage at *http://www.epa.gov/epahome/dockets.htm.*

Docket: All documents in the docket are listed in the *http://www.regulations.gov* index. Although listed in the index, some information is not publicly available, e.g., CBI or other information whose disclosure is restricted by statute. Certain other material, such as copyrighted material, will be publicly available only in hard copy. Publicly available docket materials are available either electronically in *http://www.regulations.gov* or in hard copy at the Environmental Protection Agency, Region 2 Office, Air Programs Branch, 290 Broadway, 25th Floor, New York, New York 10007–1866. EPA requests, if at all possible, that you contact the individual listed in the **FOR FURTHER INFORMATION CONTACT** section to view the hard copy of the docket. You may view the hard copy of the docket Monday through Friday, 8:30 a.m. to 4:30 p.m., excluding federal holidays.

FOR FURTHER INFORMATION CONTACT: Kirk J. Wieber (*wieber.kirk@epa.gov*), Air Programs Branch, Environmental Protection Agency, 290 Broadway, 25th Floor, New York, New York 10007–1866, (212) 637–3381.

SUPPLEMENTARY INFORMATION:

Table of Contents

I. What is required by the Clean Air Act (Act) and how does it apply to New York?
A. What is the history and time frame for State Implementation Plan (SIP) submissions?
B. What are the moderate area requirements?
II. What was included in New York's submittals?
III. What is EPA's evaluation of Part 212, ''General Process Emission Sources''?
A. Background
B. What are the new requirements of Part 212?
C. What is EPA's evaluation?
IV. What is EPA's evaluation of Part 220, ''Portland Cement Plants and Glass Plants''?
A. Background
B. What are the new requirements of Part 220?
C. What is EPA's evaluation?
V. What is EPA's evaluation of Part 227–2, ''Reasonably Available Control Technology (RACT) for Major Facilities of Oxides of Nitrogen (NO_X)''?
A. Background
B. What are the new requirements of Part 227–2?
C. What is EPA's evaluation?
VI. What other revisions did New York make?
VII. What is EPA's conclusion?
VIII. What are the consequences if a final conditional approval is converted to a disapproval?
IX. Statutory and Executive Order Reviews

I. What is required by the Clean Air Act (Act) and how does it apply to New York?

A. What is the history and time frame for State Implementation Plan (SIP) submissions?

In 1997, EPA revised the health-based national ambient air quality standards (NAAQS or standard) for ozone, setting it at 0.08 parts per million averaged over an 8-hour period. EPA set the 8-hour ozone standard based on scientific evidence demonstrating that ozone causes adverse health effects at lower ozone concentrations and over longer periods of time than was understood when the pre-existing 1-hour ozone standard was set. EPA determined that the 8-hour standard would be more protective of human health, especially with regard to children and adults who are active outdoors, and individuals with a pre-existing respiratory disease, such as asthma. On April 30, 2004 (69 FR 23858), EPA finalized its attainment/nonattainment designations for areas across the country with respect to the 8-hour ozone standard. These actions became effective on June 15, 2004. The three 8-hour ozone moderate nonattainment areas located in New York State are: the New York-Northern New Jersey-Long Island, NY-NJ-CT nonattainment area; the Poughkeepsie nonattainment area; and the Jefferson County nonattainment area. The New York portion of the New York-Northern New Jersey-Long Island, NY-NJ-CT nonattainment area is composed of the five boroughs of New York City and the surrounding counties of Nassau, Suffolk, Westchester and Rockland. This is collectively referred to as the New York City Metropolitan Area or NYMA. The Poughkeepsie nonattainment area is composed of Dutchess, Orange and Putnam counties.

The April 30, 2004 designations triggered the Act's requirements under section 182(b) for moderate nonattainment areas, including a requirement to submit a demonstration of attainment. EPA notes that on December 7, 2009 (74 FR 63993), EPA determined that the Poughkeepsie area attained the 8-hour ozone standard and on March 25, 2008 (73 FR 15672) EPA determined that Jefferson County attained the 8-hour ozone standard. On June 18, 2012 (77 FR 36163) EPA determined that the New York City Metropolitan Area attained the 8-hour ozone standard.

B. What are the moderate area requirements?

To assist states in meeting the Act's requirements for ozone, EPA released an 8-hour ozone implementation rule in two phases. EPA's Phase 1 8-hour ozone implementation rule, published on April 30, 2004 (69 FR 23951) and referred to as the Phase 1 Rule, specifies that states must submit these attainment demonstrations to EPA by no later than three years from the effective date of designation—that is, submit them by June 15, 2007.[1]

On November 29, 2005, EPA published Phase 2 of the 8-hour ozone implementation rule (70 FR 71612), referred to as the Phase 2 Rule, which addressed the control and state plan obligations that apply to areas designated nonattainment for the 8-hour NAAQS. Among other things, the Phase 1 and Phase 2 Rules outline the SIP requirements and deadlines for various requirements in areas designated as moderate nonattainment. For such areas, reasonably available control technology (RACT) plans were due by September 2006 (40 CFR 51.912(a)(2)).

Both the Phase 1 and Phase 2 rules require that modeling and attainment demonstrations, reasonable further progress plans, reasonably available control measure (RACM) analysis, projection year emission inventories, motor vehicle emissions budgets and contingency measures were all due by June 15, 2007 (40 CFR 51.908(a)).

On July 23, 2010 (75 FR 43066), EPA conditionally approved New York's statewide RACT and RACM SIP revision. EPA conditionally approved the RACT and RACM analyses for the 1997 8-hour ozone NAAQS based on New York's commitment to submit adopted RACT/RACM rules for several source categories by August 31, 2010. On May 28, 2010 (75 FR 29897) and March 8, 2012 (77 FR 13974), EPA approved five New York VOC RACT/RACM rules that New York committed to adopt pursuant to EPA's July 23, 2010 conditional approval. The three NO_X RACT rules that are the subject of this proposed action are the only remaining rules pursuant to EPA's July 23, 2010 conditional approval and New York's commitment to adopt additional RACT/RACM rules.

II. What was included in New York's submittals?

On August 19, 2010 and December 15, 2010, the New York State Department of Environmental Conservation (NYSDEC), submitted to EPA proposed revisions to the SIP, which included State adopted revisions to four regulations contained in Title 6 of the New York Code of Rules and Regulations (6 NYCRR) Part 200, ''General Provisions,'' Part 212, ''General Process Emission Sources,'' Part 220, ''Portland Cement Plants and Glass Plants,'' and Part 227–2, ''Reasonably Available Control Technology (RACT) For Major Facilities of Oxides of Nitrogen (NO_X),'' with effective dates of September 30, 2010, July 11, 2010 and July 8, 2010, respectively. These revisions are applicable statewide and will therefore provide oxides of nitrogen (NO_X) emission reductions statewide and will address, in part, attainment of the 1997 8-hour ozone standard in the NYMA and the RACT and RACM requirements.

[1] On December 22, 2006, the United States Court of Appeals for the District of Columbia Circuit (the Court) vacated the Phase 1 Rule. *South Coast Air Quality Management Dist.* v. *EPA,* 472 F.3d 882 (D.C. Cir. 2006). Subsequently, in *South Coast Air Quality Management Dist.* v. *EPA,* 489 F.3d 1295 (D.C. Cir. 2007), in response to several petitions for rehearing, the Court clarified that the Phase 1 Rule was vacated only with regard to those parts of the rule that had been successfully challenged. The court upheld the portions of the Phase 1 Rule relating to EPA's classification system under subpart 2. The portions of the rule that were vacated do not affect this proposed action.

III. What is EPA's evaluation of Part 212, ''General Process Emission Sources''?

A. Background

The NYSDEC revised 6 NYCRR Part 212, by adding section 212.12, ''Hot mix asphalt production plants,'' to include control requirements for hot mix asphalt production plants. These control requirements will be specifically aimed at reducing NO_X emissions resulting from combustion during the aggregate drying and heating process.

With the exception of section 212.12, NO_X requirements under Part 212 affect only major facilities. Major facilities or major sources are those that have a potential to emit NO_X emissions in excess of 100 tons/yr (upstate) and 25 tons/yr (downstate or in the NYMA.) Most, if not all, hot mix asphalt plants in New York State are minor sources. These new requirements will therefore be targeted primarily at minor sources. Approximately 200 hot mix asphalt production plants exist throughout the State, though not all are currently in service. While some asphalt production plants have consolidated under common ownership, many of these could be considered small businesses. On February 28, 2013, New York submitted a letter to EPA certifying that there are no ''major source'' asphalt production plants located in New York State.

B. What are the new requirements of Part 212?

The new compliance requirements under section 212.12 apply uniformly statewide. Under the proposed requirements, owners and operators of hot mix asphalt production plants must comply with NO_X reduction practices and the possible application of low NO_X burner control technology. Annual burner tune-ups will be required in order to increase the efficiency of the dryer burner. Plants will also be required to implement methods of reducing the moisture content in their aggregate stockpiles, which will result in less drying time and therefore will require less fuel to be burned and less NO_X emissions.

The owners or operators of plants will also be required to analyze the economic feasibility of installing a low NO_X burner [2] when their current burner is due to be replaced (though no later than 2020). In instances where it proves feasible, the installation of a low NO_X burner will be required. The cost effectiveness calculation contained in New York's ''Air Guide 20 Economic and Technical Analysis for Reasonably Available Control Technology'' will be utilized, with a threshold that represents the dollar per ton value of RACT at the time the analysis is done, in order to determine economic feasibility.

C. What is EPA's evaluation?

NO_X Emission Control Requirements and Compliance Dates

Section 212.12 requires facilities to do the following for reducing NO_X emissions; (1) Perform a tune-up on the dryer burner on an annual basis, (2) submit a plan which details the introduction or continuation of methods by which to reduce the moisture content of the aggregate stockpile(s), and (3) analyze the economic feasibility of installing a low NO_X burner when it comes time for their current burner to be replaced. New York requires that ''Air Guide 20 Economic and Technical Analysis for Reasonably Available Control Technology'' will be utilized, with a threshold that represents the dollar per ton value of RACT at the time the analysis is done, in order to determine economic feasibility.

New York amended Part 212 by including new provisions applicable to asphalt production plants that will result in additional reductions in NO_X emissions. Emission reductions required by sections 182(b)(2) and 172(c)(1) of the Act that are used to fulfill in the 1997 ozone SIP, are required for all existing ''major sources,'' see section 182(b)(1)(A)(ii)(II) of the Act. As discussed previously, New York's section 212.12 applies to hot mix asphalt production plants, most which are minor sources. As noted in New York's February 28, 2013 letter, there are no existing major sources of hot mix asphalt production. Therefore, EPA proposes to determine the emission reductions resulting from section 212.12 represent additional reductions in NO_X emissions towards attaining and maintaining the ozone standard.

Part 212 contains the required elements for a federally enforceable rule: emission control requirements, compliance procedures and test methods, compliance dates and record keeping provisions. Therefore, EPA is proposing to approve the revisions to Part 212.

IV. What is EPA's evaluation of Part 220, ''Portland Cement Plants and Glass Plants''?

A. Background

The NYSDEC revised 6 NYCRR Part 220, which is divided into two subparts: 220–1 for portland cement plants; and 220–2 for glass manufacturing plants. In addition to other requirements, the existing regulation imposed RACT requirements on NO_X emissions from portland cement kilns. The NYSDEC revised Part 220 to require updated NO_X RACT for cement kilns at portland cement plants, and to require NO_X RACT for glass furnaces at glass plants. The revisions will apply statewide to major facilities only. Major facilities are those that have a potential to emit NO_X emissions that exceed 100 tons/yr (upstate) and 25 tons/yr (downstate).

The NYSDEC is taking a RACT approach that requires a facility specific analysis. The plant owner or operator will be required to perform a facility specific RACT analysis for emissions of NO_X that includes proposed NO_X RACT emission limit(s), identifies the procedures and monitoring equipment to be used to demonstrate compliance with the proposed NO_X RACT emission limit(s), and includes a schedule for equipment installation. The RACT analysis will be submitted to the NYSDEC for review and approval and subsequently submitted to EPA as a proposed revision to the SIP.

B. What are the new requirements of Part 220?

The revised Subpart 220–1 revisions include the removal of a definition, the addition of several new definitions, and revisions to the RACT requirements for NO_X emissions. Section 220.1 will become section 220–1.1 and will be revised to remove the definition of ''RACT'' and ''Upset Condition.'' Also, the revisions will add definitions for clinker, portland cement kiln, and portland cement plant. Sections 220.2 through 220.5 will become sections 220–1.2 through 220–1.5. These sections contain existing requirements for particulate emissions from existing, new, and modified kilns and clinker coolers, opacity limits for portland cement processes, and particulate emissions from dust dumps.

Section 220.6 will become section 220–1.6 and the existing NO_X RACT requirements will be replaced with new NO_X RACT requirements. The revisions require a portland cement kiln owner or operator to perform a facility specific RACT analysis for emissions of NO_X from the kiln that includes proposed RACT emission limit(s), identifies the

[2] As defined in Subpart 212.1, ''A burner designed to reduce flame turbulence by the mixing of fuel and air and by establishing fuel-rich zones for initial combustion, thereby reducing the formation of nitrogen oxides.''

procedures and monitoring equipment to be used to demonstrate compliance with the proposed RACT emission limit(s), and includes a schedule for equipment installation. The RACT analysis was to be submitted to the NYSDEC by December 1, 2010. RACT, as approved by the NYSDEC, must be implemented by July 1, 2012. Approved RACT determinations will be submitted by the NYSDEC to the EPA for approval as separate SIP revisions. The proposed revisions include a kiln shut down option. The owner or operator of a portland cement kiln may opt to comply with the RACT requirements by shutting down the kiln. An owner or operator choosing this option shall submit an application for a federally enforceable permit modification by December 1, 2010 wherein the owner or operator commits to permanently shut down the furnace by July 1, 2012.

Section 220.8 will become section 220–1.7 and will be revised to require NO_X emissions from portland cement kilns to be continuously monitored. The proposed revisions include specific continuous emissions monitoring, reporting, and recordkeeping requirements.

Proposed Subpart 220–2 is new. This subpart will require NO_X RACT for glass furnaces at glass plants. The requirements of this Subpart apply to any glass plant that is a major facility of NO_X emissions. Definitions of glass melting furnace, glass plants, and glass produced or glass production are included in section 220–2.2.

Section 220–2.3 contains the NO_X RACT requirements. The revisions require a glass melting furnace owner or operator to perform a facility specific RACT analysis for emissions of NO_X from the furnace that includes proposed RACT emission limit(s), identifies the procedures and monitoring equipment to be used to demonstrate compliance with the RACT emission limit(s), and includes a schedule for equipment installation. The RACT analysis will be submitted to the NYSDEC by December 1, 2010. RACT, as approved by the NYSDEC, must be implemented by July 1, 2012. Approved RACT determinations will be submitted by the NYSDEC to the EPA for approval as separate SIP revisions. The proposed revisions include a glass melting furnace shut down option. The owner or operator of a glass melting furnace may opt to comply with the RACT requirements by shutting down the furnace. An owner or operator choosing this option shall submit an application for a federally enforceable permit modification by December 1, 2010 wherein the owner or operator commits to permanently shut down the furnace by July 1, 2012.

The section 220–2.4 revisions require NO_X emissions from glass melting furnaces to be continuously monitored. The revisions include specific continuous emissions monitoring, reporting, and recordkeeping requirements.

C. What is EPA's evaluation?

Subpart 220–1 Portland Cement Plants

It is EPAs understanding that there are three portland cement plants located in New York State that are subject to the RACT provisions of subpart 220–1. These three facilities are also subject to New York's regional haze plan's best available retrofit technologies (BART) provisions pursuant to 6 NYCRR Part 249.

Of the three cement plants, EPA has been informed that one of the facilities (Holcim) will be shutting down operations and surrendering the operating permit for the kiln. Another facility (Lafarge) will be modernizing the existing plant by replacing the two existing long wet kilns with a new short dry kiln and pre-heater pre-calciner tower. The third facility (LeHigh) concluded that SNCR technology is cost effective ($1,145/ton NO_X removed) and will therefore be installing an SNCR. On August 28, 2012 (77 FR 51915), EPA approved these scenarios for each facility as BART determinations pursuant to Part 249. Although EPA believes that the BART determinations approved for these facilities would also constitute RACT, New York is obligated to submit the RACT determinations to EPA as SIP revisions in order to satisfy the subpart 220–1.6(b)(4) RACT requirement and sections 172(c)(1) and 182(b) of the Act.

According to EPA's November 7, 1996 policy memo, entitled ''Approval Options for Generic RACT Rules Submitted to Meet the non-CTG VOC RACT Requirement and Certain NO_X RACT Requirements,'' EPA may fully approve VOC and NO_X RACT regulations provided: (1) The state has submitted a generic rule, and now believes that it has submitted to EPA all the source-specific rules and has submitted a negative declaration that to its best knowledge, there are no remaining unregulated sources, or (2) the generic rule covers only a limited number of sources, with emissions, in the aggregate, that are determined to be de-minimis. In a letter dated February 28, 2013 to EPA, New York commits to submit the applicable single source NO_X RACT determinations to EPA by December 1, 2013.

EPA evaluated the provisions of subpart 220–1 for consistency with the Act, EPA regulations, and EPA policy and proposes to conditionally approve them based on New York submitting the individual single source RACT determinations to EPA by December 1, 2013.

Subpart 220–2 Glass Plants

It is EPA's understanding that there are four glass plants located in New York State. Subpart 220–2 does not identify a specific control strategy or emission limit as RACT for these facilities and requires individual source specific RACT determinations. To date, EPA has not received any of those source specific RACT determinations. However, in a letter dated February 28, 2013 to EPA, New York commits to submit the applicable single source NO_X RACT determinations to EPA by December 1, 2013.

EPA evaluated the provisions of subpart 220–2 for consistency with the Act, EPA regulations, and EPA policy (see EPA's RACT policy memo referenced above) and proposes to conditionally approve them based on New York submitting the individual single source RACT determinations to EPA by December 1, 2013.

V. What is EPA's evaluation of Part 227–2, ''Reasonably Available Control Technology (RACT) for Major Facilities of Oxides of Nitrogen (NO_X)''?

A. Background

New York adopted revisions to Subpart 227–2 for the purpose of imposing more stringent emission limits on major stationary sources of NO_X that contribute to local and regional nonattainment of the 1997 and 2008 ozone standards. The revisions to Subpart 227–2 essentially entail increasing the stringency of emissions limits for six of the source categories and lowering of the size thresholds for two categories of sources. There are also two revisions that will allow subject sources increased flexibility in achieving compliance.

B. What are the new requirements of Part 227–2?

The Subpart 227–2 revisions include the removal of several definitions (to be relocated to Part 200) and revision of other definitions, a change in the application and permitting requirements, a change in emission limits for most boiler categories, a requirement to submit a new RACT proposal for combined cycle combustion turbines, and revisions to the compliance options.

Section 227–2.2 was revised to remove the definitions of boiler, combined cycle combustion turbine, combustion turbine, continuous emissions monitoring system (CEMS) certification protocol, emergency power generating stationary internal combustion engine, preliminary continuous emissions monitoring system plan, simple cycle combustion turbine, and very large boiler. These definitions will be moved to 6 NYCRR Part 200 (preliminary continuous emissions monitoring system plan will be changed to continuous emissions monitoring system plan), as stated above. Also, the revisions will modify the terms mid-size boiler and small boiler. A mid-size boiler will now be defined as ''a boiler with a maximum heat input capacity greater than 25 million Btu per hour and equal to or less than 100 million Btu per hour.'' A small boiler will now be defined as ''a boiler with a maximum heat input capacity equal to or greater than one million Btu per hour and equal to or less than 25 million Btu per hour.''

Section 227–2.3 was revised to specifically require that subject facilities must submit an application for a Title V permit or permit modification (depending on the current facility status). The requirement to submit a compliance plan was removed since this information is now included in the facility's permit application.

Section 227–2.4 was revised to change the presumptive RACT emission limits for very large, large, and mid-size boilers. Combined cycle turbines will be required to perform a case-by-case RACT analysis. Also, the revisions will remove the 500-hour non-ozone season presumptive emission limit exemption for simple cycle combustion turbines.

Section 227–2.5 was revised to include a shutdown option for any subject emission source. The intent to shut down an emission source must be recorded as part of a permit modification prior to January 1, 2012, wherein the owner or operator commits to permanently shut down the emission source prior to December 31, 2014. Section 227–2.5 also allows for additional compliance flexibility via applying for a system averaging plan.

C. What is EPA's evaluation?

NO_X Emission Rates

New York has revised section 227–2.4 (Control requirements) requiring stricter NO_X emission limits on three boiler categories, requiring owners of combined cycle combustion turbines to submit a RACT proposal that the State expects will result in additional NO_X emission reductions, as well as other revisions that are expected to lower NO_X emissions. New York expects that when the stricter control requirements are implemented by the July 1, 2014 compliance date, actual NO_X emissions in the State will be reduced by 28,796 tons per year or a daily reduction of 78.9 tons from 2007 levels. The following summarizes the revised control requirements at section 227–2.4 that are expected to result in NO_X reductions:

- For very large boilers, presumptive NO_X emission limits are lowered to the range of 0.08 to 0.20 pounds per million BTU (lb/mmBTU), depending upon the type fuel and boiler configuration. The new limits represent NO_X reductions in the range of 40% to 88%.
- For large boilers, presumptive NO_X emission limits are lowered to the range of 0.06 to 0.20 lb/mmBTU which equates to NO_X reductions in the range of 50% to 73.3%.
- For mid-size boilers, presumptive NO_X emissions are lowered to the range of 0.05 to 0.20 lb/mmBTU which equates to NO_X reductions in the range of 33% to 50%.
- For small boilers, the upper range of this boiler category is lowered from 50 mmBTU/hr to 25 mmBTU/hr thereby requiring boilers in the range greater than 25 mmBTU/hr up to 50 mmBTU/hr to be reclassified as mid-size boilers thereby requiring these boilers to meet the presumptive emission limits for mid-size boilers. Currently these small boilers only need to conduct an annual tune-up. New York's revised definitions of the terms ''Small boiler'' and ''Mid-size boiler'' are found at sections 227–2.2(b)(8) and 227–2.2(b)(4), respectively, and these revised definitions are acceptable to EPA.
- For small size boilers, the lower limit of this boiler category was 20 mmBTU/hr (10 mmBTU/hr for coal and residual oil-fired sources in the severe ozone nonattainment area) but is now equal to or greater than one mmBTU/hr. Therefore, the additional boilers will need to comply with the section 227–2.4(d) requirement to conduct an annual tune-up.
- For all combined cycle combustion turbines that operate after July 1, 2014, owners or operators must submit a RACT proposal to NYSDEC for approval. 6 NYCRR 227–2.4(e)(3). The State's approved RACT plan would be submitted to EPA for approval as a SIP revision in accordance with section 227–2.3(c).
- New York removed the presumptive emission limit exemption for peaking combustion turbines that operate less than 500 hours during the non-ozone season. These sources must now comply annually with the control requirements at section 227–2.4(e).
- Small combustion turbines and small stationary internal combustion engines are now required to comply with the section 227–2.4(d) requirement to conduct an annual tune-up. New York defines the terms ''Small combustion turbine'' and ''Small stationary internal combustion engine'' at sections 227–2.2(b)(9) and (10), respectively, and these new definitions are acceptable to EPA.

EPA believes that the new presumptive emission limits and other control requirements will result in additional NO_X reductions throughout the State thereby strengthening New York's ozone SIP and will help the State attain and maintain the 1997 ozone standard and help achieve attainment of the 2008 8-hour ozone standard.

Compliance Dates and Flexibility

There are two revisions to Part 227–2 that will allow subject sources increased flexibility in achieving compliance—one allows different owners to engage in a systems averaging plan and the second allows a permanent shutdown by a date certain as a compliance option.

Systems Averaging Plan

New York revised the definition of ''system'' at section 227–2.2(b)(12), as used in the term ''system averaging plan'' in subpart 227–2.5(b), to read as ''a combination of operating emission sources that are located within the same ozone nonattainment area. A system may consist of multiple emission sources at multiple facilities having different owners and/or operators.'' New York verbally confirmed to EPA that the detailed procedures for determining compliance with the averaging plan are included in title V permits of those facilities that choose to make use of this option. In addition, New York's system averaging plan requires that ''every owner or operator of an emission source participating in the system averaging plan is liable for any and all violations of the provisions of this Subpart [i.e., subpart 227–2] by any owner or operator of any emission source participating in the system averaging plan.'' 6 NYCRR 227–2.5(b)(4). New York's averaging provision, 227–2.5(b)(2) further restricts the plan by only allowing averaging of facilities within the ''severe ozone nonattainment area'' but not with facilities inside and outside the nonattainment area. Although EPA has not classified any 8-hour ozone nonattainment areas in New York as severe, New York retained the term ''severe ozone nonattainment area'' to

maintain consistency with existing SIP approved regulations and ''anti-backsliding'' provisions of the Act. These affected counties are the same counties defined by EPA for New York's marginal 2008 8-hour ozone nonattainment area for the New York City Metropolitan area and include the same counties now being maintained for the 1997 8-hour moderate ozone New York City Metropolitan area. Since New York avoids potential confusion by defining the affected counties in the ''severe nonattainment area,'' this is acceptable to EPA.

Shutdown of an Emissions Source

New York provides owners/operators with a new compliance option at section 227–2.5(d) that allows them to comply with the State's NO_X RACT requirements by shutting down an emission source by a date certain. New York requires that, ''The intent to shut down must be recorded as part of a federally enforceable permit modification prior to January 1, 2012, wherein the owner or operator commits to permanently shut down the emission source prior to December 31, 2014.''

New York's revised system averaging plan is acceptable to EPA as it is enforceable through federally enforceable title V permits and it reflects current situations where there could be multiple ownership of a particular facility.

EPA evaluated the provisions of Part 227–2 for consistency with the Act, EPA regulations, and EPA policy and proposes to approve them.

VI. What other revisions did New York make?

New York also made administrative changes to Part 200, ''General Provisions'' which reflect implementation of the Part 212, 220 and 227–2 provisions. The Part 200 revisions also reflect implementation of provisions for three previously approved New York regulations, Part 228, ''Surface Coating Processes, Commercial and Industrial Adhesives, Sealants and Primers,'' Part 234, ''Graphic Arts,'' and Part 241, ''Asphalt Pavement and Asphalt Based Surface Coating,'' (see 77 FR 13974). Specifically, New York made amendments to section 200.1, ''Definitions.'' The section 200.1 amendments add the definitions for the terms boiler, combined cycle combustion turbine, combustion turbine, continuous emissions monitoring system (CEMS) certification protocol, continuous emissions monitoring system plan, emergency power generating stationary internal combustion engine, simple cycle combustion turbine, and very large boiler. These definitions are being included under section 200.1 for consistency due to their use in multiple regulations.

The revisions to Part 200 will also add new references in section 200.9, ''Referenced Material,'' Table 1. The revisions to Table 1 include all documents referenced in the proposed amendments to Parts 212, 220, 227–2 and previously approved Parts 228, 234 and 241. It is important to note that EPA is proposing to approve only those revisions made to Part 200, specifically sections 200.1 and 200.9, as effective January 1, 2011.

VII. What is EPA's conclusion?

EPA has evaluated New York's submittal for consistency with the Act, EPA regulations, and EPA policy. EPA proposes that the revisions made to 6 NYCRR Part 200, ''General Provisions,'' Part 212, ''General Process Emission Sources,'' Part 220, ''Portland Cement Plants and Glass Plants,'' and Part 227–2, ''Reasonably Available Control Technology (RACT) For Major Facilities of Oxides of Nitrogen (NO_X)'' with effective dates of January 1, 2011, September 30, 2010, July 11, 2010 and July 8, 2010, respectively, meet the SIP requirements of the Act. EPA is proposing to: approve sections 200.1 and 200.9; approve Part 212; to conditionally approve Part 220 based on New York's commitment to submit the individual RACT determinations to EPA as SIP revisions by December 1, 2013; and, to approve Part 227–2. These revisions meet the requirements of the Act and EPA's regulations, and are consistent with EPA's guidance and policy. EPA is taking this action pursuant to section 110 and part D of the Act and EPA's regulations.

EPA is proposing a conditional approval of New York's proposed revisions to 6 NYCRR Part 220 based on New York's February 28, 2013 letter, committing to submit the applicable NO_X RACT single source SIPs by December 1, 2013.

Under section 110(k)(4) of the Act, EPA may conditionally approve a plan based on a commitment from the State to adopt specific enforceable measures by a date certain, but not later than 1 year from the date of approval. If EPA conditionally approves the commitment in a final rulemaking action, the State must meet its commitment to adopt the identified source specific SIP revisions. If the State fails to do so, this action will become a disapproval upon the State's failure to meet its commitment. EPA will notify the State by letter that this action has occurred. If the conditional approval converts to a disapproval, the commitment will no longer be a part of the approved New York SIP. Upon notification to the State that the conditional approval has converted to a disapproval, EPA will publish a notice in the **Federal Register** notifying the public that the conditional approval automatically converted to a disapproval. If EPA disapproves the proposed revisions to Part 220, such action will start a sanctions and FIP clock (see section VII). If the State meets its commitment, within the applicable time frame, the conditionally approved submission will remain a part of the SIP. If EPA approves the submittals, the revisions to Part 220 will be fully approved into the SIP in their entirety and the conditional approval removed.

VIII. What are the consequences if a final conditional approval is converted to a disapproval?

For didactical purposes, EPA provides the following discussion regarding the consequences of a final conditional approval converting to a disapproval. EPA does not expect this situation to occur.

The Act provides for the imposition of sanctions and the promulgation of a federal implementation plan (FIP) if states fail to correct any deficiencies identified by EPA in a final disapproval action within certain timeframes.

A. What are the Act's provisions for sanctions?

As mentioned above, if New York does not submit the applicable NO_X RACT single source SIPs by September 1, 2013, EPA's conditional approval converts to a disapproval. If EPA disapproves a required SIP submittal or component of a SIP submittal, section 179(a) provides for the imposition of sanctions unless the deficiency is corrected within 18 months of the final rulemaking of disapproval. The first sanction would apply 18 months after EPA disapproves the SIP submittal. Under EPA's sanctions regulations, 40 CFR 52.31, the first sanction would be 2:1 offsets for sources subject to the new source review requirements under section 173 of the Act. If, six months after the first sanction is imposed, the state has still failed to submit a SIP for which EPA proposes full or conditional approval, the second sanction will apply. The second sanction is a limitation on the receipt of federal highway funds. EPA also has authority under section 110(m) to sanction broader than the affected area as defined in 52.31(a)(3).

B. What federal implementation plan provisions apply if a state fails to submit an approvable plan?

In addition to sanctions, if EPA finds that a state failed to submit the required SIP revision or if EPA disapproves the required SIP revision, or a portion thereof, EPA must promulgate a FIP no later than 2 years from the date of the finding if the deficiency has not been corrected.

IX. Statutory and Executive Order Reviews

Under the Act, the Administrator is required to approve a SIP submission that complies with the provisions of the Act and applicable federal regulations. 42 U.S.C. 7410(k); 40 CFR 52.02(a). Thus, in reviewing SIP submissions, EPA's role is to approve state choices, provided that they meet the criteria of the Act. Accordingly, this proposed action merely approves state law as meeting federal requirements and does not impose additional requirements beyond those imposed by state law. For that reason, this proposed action:

- Is not a ''significant regulatory action'' subject to review by the Office of Management and Budget under Executive Order 12866 (58 FR 51735, October 4, 1993);
- Does not impose an information collection burden under the provisions of the Paperwork Reduction Act (44 U.S.C. 3501 *et seq.*);
- Is certified as not having a significant economic impact on a substantial number of small entities under the Regulatory Flexibility Act (5 U.S.C. 601 *et seq.*);
- Does not contain any unfunded mandate or significantly or uniquely affect small governments, as described in the Unfunded Mandates Reform Act of 1995 (Pub. L. 104–4);
- does not have Federalism implications as specified in Executive Order 13132 (64 FR 43255, August 10, 1999);
- is not an economically significant regulatory action based on health or safety risks subject to Executive Order 13045 (62 FR 19885, April 23, 1997);
- is not a significant regulatory action subject to Executive Order 13211 (66 FR 28355, May 22, 2001);
- is not subject to requirements of Section 12(d) of the National Technology Transfer and Advancement Act of 1995 (15 U.S.C. 272) because application of those requirements would be inconsistent with the Act; and
- does not provide EPA with the discretionary authority to address, as appropriate, disproportionate human health or environmental effects, using practicable and legally permissible methods, under Executive Order 12898 (59 FR 7629, February 16, 1994).

In addition, this proposed action does not have tribal implications as specified by Executive Order 13175 (65 FR 67249, November 9, 2000), because the SIP is not approved to apply in Indian country located in the state, and EPA notes that it will not impose substantial direct costs on tribal governments or preempt tribal law.

List of Subjects in 40 CFR Part 52

Environmental protection, Air pollution control, Hydrocarbons, Incorporation by reference, Intergovernmental relations, Oxides of Nitrogen, Ozone, Reporting and recordkeeping requirements, Volatile organic compounds.

Dated: April 1, 2013.

Judith A. Enck,

Regional Administrator, Region 2.

[FR Doc. 2013–08398 Filed 4–9–13; 8:45 am]

BILLING CODE 6560–50–P

DEPARTMENT OF HEALTH AND HUMAN SERVICES

Centers for Medicare & Medicaid Services

42 CFR Part 411

[CMS–1454–P]

RIN 0938–AR70

Medicare Program; Physicians' Referrals to Health Care Entities With Which They Have Financial Relationships: Exception for Certain Electronic Health Records Arrangements

AGENCY: Centers for Medicare & Medicaid Services (CMS), HHS.

ACTION: Proposed rule.

SUMMARY: This proposed rule would revise the exception to the physician self-referral prohibition for certain arrangements involving the donation of electronic health records items and services. Specifically, it would extend the sunset date of the exception, remove the electronic prescribing capability requirement, and update the provision under which electronic health records technology is deemed interoperable. In addition, we are requesting public comment on other changes we are considering.

DATES: To be assured consideration, comments must be received at one of the addresses provided below, no later than 5 p.m. on June 10, 2013.

ADDRESSES: In commenting, please refer to file code CMS–1454–P. Because of staff and resource limitations, we cannot accept comments by facsimile (FAX) transmission.

You may submit comments in one of four ways (please choose only one of the ways listed):

1. *Electronically.* You may submit electronic comments on this regulation to *http://www.regulations.gov.* Follow the ''Submit a comment'' instructions.

2. *By regular mail.* You may mail written comments to the following address ONLY: Centers for Medicare & Medicaid Services, Department of Health and Human Services, Attention: CMS–1454–P, P.O. Box 8013, Baltimore, MD 21244–8013.

Please allow sufficient time for mailed comments to be received before the close of the comment period.

3. *By express or overnight mail.* You may send written comments to the following address ONLY: Centers for Medicare & Medicaid Services, Department of Health and Human Services, Attention: CMS–1454–P, Mail Stop C4–26–05, 7500 Security Boulevard, Baltimore, MD 21244–1850.

4. *By hand or courier.* Alternatively, you may deliver (by hand or courier) your written comments ONLY to the following addresses prior to the close of the comment period:

a. For delivery in Washington, DC—Centers for Medicare & Medicaid Services, Department of Health and Human Services, Room 445–G, Hubert H. Humphrey Building, 200 Independence Avenue SW., Washington, DC 20201.

(Because access to the interior of the Hubert H. Humphrey Building is not readily available to persons without Federal government identification, commenters are encouraged to leave their comments in the CMS drop slots located in the main lobby of the building. A stamp-in clock is available for persons wishing to retain a proof of filing by stamping in and retaining an extra copy of the comments being filed.)

b. For delivery in Baltimore, MD—Centers for Medicare & Medicaid Services, Department of Health and Human Services, 7500 Security Boulevard, Baltimore, MD 21244–1850.

If you intend to deliver your comments to the Baltimore address, call telephone number (410) 786–9994 in advance to schedule your arrival with one of our staff members.

Comments erroneously mailed to the addresses indicated as appropriate for hand or courier delivery may be delayed and received after the comment period.

For information on viewing public comments, see the beginning of the **SUPPLEMENTARY INFORMATION** section.

FOR FURTHER INFORMATION CONTACT: Michael Zleit, (410) 786–2050.

SUPPLEMENTARY INFORMATION:

Inspection of Public Comments: All comments received before the close of the comment period are available for viewing by the public, including any personally identifiable or confidential business information that is included in a comment. We post all comments received before the close of the comment period on the following Web site as soon as possible after they have been received: *http://www.regulations.gov.* Follow the search instructions on that Web site to view public comments.

Comments received timely will also be available for public inspection as they are received, generally beginning approximately 3 weeks after publication of a document, at the headquarters of the Centers for Medicare & Medicaid Services, 7500 Security Boulevard, Baltimore, Maryland 21244, Monday through Friday of each week from 8:30 a.m. to 4 p.m. To schedule an appointment to view public comments, phone 1–800–743–3951.

Comments received by CMS will be shared with the HHS Office of Inspector General.

I. Executive Summary

A. Purpose of the Regulatory Action

Section 1877 of the Social Security Act (the Act), codified at 42 U.S.C. 1395nn, also known as the physician self-referral statute: (1) prohibits a physician from making referrals for certain designated health services (DHS) payable by Medicare to an entity with which he or she (or an immediate family member) has a financial relationship (ownership interest or compensation arrangement), unless an exception applies; and (2) prohibits the entity from submitting claims to Medicare for those referred services, unless an exception applies. The statute establishes a number of exceptions and grants the Secretary the authority to create additional regulatory exceptions for financial relationships that do not pose a risk of program or patient abuse. Since the original enactment of the statute in 1989, we have published a series of final rules interpreting the statute and promulgating numerous exceptions.

In accordance with this authority, we published an exception to protect certain arrangements involving the provision of interoperable electronic health records software or information technology and training services. The final rule for this exception was published on August 8, 2006 (71 FR 45140) (hereinafter referred to as the August 2006 final rule) and is scheduled to sunset on December 31, 2013 (See 42 CFR 411.357(w)(13)). The purpose of this proposed rule is to update certain aspects of the electronic health records exception and to extend the sunset date.

B. Summary of the Major Provisions

This proposed rule would amend the current exception in at least three ways. First, the proposed rule would update the provision under which electronic health records software is deemed interoperable. Second, we propose to remove the requirement related to electronic prescribing capability from the exception. Third, we propose to extend the sunset date of the exception. In addition to these proposals, we are soliciting public comment on other possible amendments to the exception, including limiting the scope of protected donors, and adding or modifying conditions to limit the risk of data and referral lock-in.

C. Costs and Benefits

The proposed rule would modify an already-existing exception to the physician self-referral statute. This exception permits certain entities to provide technology-related items and services to certain parties to be used to create, maintain, transmit, or receive electronic health records. The proposed modifications to the exception do not impose new requirements on any party. This is not a major rule, as defined at 5 U.S.C. 804(2). It is also not economically significant, because it would not have a significant effect on program expenditures, and there are no additional substantive costs to implement the resulting provisions. The proposed rule would update the provision under which electronic health records software is deemed interoperable, and remove the requirement related to electronic prescribing capability, and extend the exception's expiration date (currently set at December 31, 2013). We expect these proposed changes to continue to facilitate the adoption of electronic health records technology.

II. Background

A. Physician Self-Referral Statute and Exceptions

Section 1877 of the Social Security Act (the Act), 42 U.S.C. 1395nn, also known as the physician self-referral law: (1) prohibits a physician from making referrals for certain designated health services (DHS) payable by Medicare to an entity with which he or she (or an immediate family member) has a financial relationship (ownership interest or compensation arrangement), unless an exception applies; and (2) prohibits the entity from submitting claims to Medicare for those referred services, unless an exception applies. The statute at 42 U.SC. 1395nn(b)(4), establishes a number of exceptions and grants the Secretary of the Department of Health and Human Services (the Secretary) (HHS) the authority to create additional regulatory exceptions for financial relationships that do not pose a risk of program or patient abuse. Since the original enactment of the statute in 1989, we have published a series of final rules interpreting the statute and promulgating numerous exceptions.

B. The Electronic Health Records Items and Services Exception

In the October 11, 2005 **Federal Register** (70 FR 59182), we published a proposed rule (the 2005 proposed rule) that would promulgate two exceptions to the physician self-referral law to address donations of certain electronic health records software and directly related training services, using our authority at section 1877(b)(4) of the Act. One proposed exception would have protected certain arrangements involving donations of electronic health records technology made before the adoption of certification criteria. The other proposed exception would have protected certain arrangements involving nonmonetary remuneration in the form of interoperable electronic health records software certified in accordance with criteria adopted by the Secretary and directly related training services. In the same issue of the **Federal Register** (70 FR 59015), the HHS Office of Inspector General (OIG) proposed similar language to establish a ''safe harbor'' under the Federal anti-kickback statute.

On August 8, 2006 (71 FR 45140), we published a final rule that, among other things, finalized an exception at 42 CFR 411.357(w) [1] (the ''electronic health records exception'') to the physician self-referral prohibition for protecting certain arrangements involving interoperable electronic health records software or information technology and training services. Also, in the August 8, 2006 **Federal Register** (71 FR 45110), the OIG simultaneously published similar final regulations at 42 CFR 1001.952 that, among other things,

[1] For the reasons discussed in more detail in the preamble on August 8, 2006 final rule (71 FR 45140), we abandoned the proposal to have separate pre- and post-interoperability exceptions for electronic health records arrangements.

adopted a single safe harbor under the Federal anti-kickback statute for certain arrangements involving interoperable electronic health records software or information technology and training services. As set forth at 42 CFR 411.357(w)(13), the physician self-referral electronic health records exception is scheduled to sunset on December 31, 2013.

This proposed rule sets forth certain proposed changes to the electronic health records exception to the physician self-referral law. The OIG is proposing almost identical changes to the anti-kickback statute electronic health records safe harbor [2] elsewhere in this issue of the **Federal Register**. We attempted to ensure as much consistency as possible between our proposed changes to the physician self-referral exception and OIG's safe harbor changes, despite the differences in the respective underlying statutes. We intend the final rules to be similarly consistent. Also, because of the close nexus between this proposed rule and OIG's proposed rule, we may consider comments submitted in response to OIG's proposed rule when crafting our final rule. Similarly, OIG may consider comments submitted in response to this proposed rule in crafting its final rule.

II. Provisions of the Proposed Rule

A. The Deeming Provision

Our current electronic health records exception to the physician self-referral law specifies at § 411.357(w)(2) that the donated software must be interoperable at the time it is provided to the physician. As discussed in the March 7, 2013 (78 FR 14795) request for information (RFI), ''HHS envisions an information rich, person-centered, high performance health care system where every health care provider has access to longitudinal data on patients they treat to make evidence-based decisions, coordinate care and improve health outcomes.'' Additionally, as emphasized in this RFI, interoperability will play a critical role in supporting this vision. Interoperability is also an important concept in the context of the electronic health records exception. Although we have long been concerned that parties could use the donation of technology to capture referrals, we have viewed interoperability as a potential mitigating factor, or safeguard, to justify other exception conditions that are less stringent than might otherwise be appropriate in the absence of interoperability. This is because if the donated technology is interoperable, the recipient will be able to use it to transmit electronic health records not only to the donor, but to others, including competitors of the donor, and will not be ''locked in'' to communications with the donor only.[3] For purposes of this exception, ''interoperable'' (as defined at § 411.351) means ''able to communicate and exchange data accurately, effectively, securely, and consistently with different information technology systems, software applications, and networks, in various settings; and exchange data such that the clinical or operational purpose and meaning of the data are preserved and unaltered.'' The current provisions of the electronic health records exception state that for purposes of meeting the condition set forth in § 411.357(w)(2), ''software is deemed to be interoperable if a certifying body recognized by the Secretary has certified the software no more than 12 months prior to the date it is provided to the physician.'' We propose to update two aspects of this deeming provision to reflect the current Office of the National Coordinator for Health Information Technology (ONC) certification program for electronic health record technology.

First, we propose to modify § 411.357(w)(2) to reflect that ONC is responsible for ''recognizing'' certifying bodies, as referenced in this provision.[4] To become a certifying body ''recognized'' by the Secretary, an entity must successfully complete an authorization process established by ONC. This authorization process constitutes Secretary's recognition as a certifying body. Accordingly, we propose to revise the phrase ''recognized by the Secretary'' in the second sentence of paragraph (w)(2) to read ''authorized by the National Coordinator for Health Information Technology.''

Second, we propose to modify the portion of this provision concerning the time period within which the software must have been certified. Currently, the electronic health records exception deeming provision requires that software must have been certified within no more than 12 months prior to the date of donation in order to ensure that products have an up-to-date certification. Subsequent to issuing the final electronic health records exception, ONC developed a regulatory process for adopting certification criteria and standards. That process is anticipated to occur on a 2-year regulatory interval. (For more information, see ONC's September 4, 2012 final rule titled ''Health Information Technology: Standards, Implementation Specifications, and Certification Criteria for Electronic Health Record Technology'', 2014 Edition; Revisions to the Permanent Certification Program for Health Information Technology (77 FR 54163).) Further, some certification criteria could remain unchanged from one edition of electronic health record certification criteria to the next. Thus, the current 12-month timeframe is not in line with the anticipated 2-year regulatory interval and does not account for the fact that some certification criteria may not change from one edition to the next. Therefore, we propose to modify this portion of the exception by removing the 12-month timeframe and substituting a provision that more closely tracks the current ONC certification program. Accordingly, we propose that software would be eligible for deeming if, on the date it is provided to the recipient, it has been certified to any edition of the electronic health record certification criteria that is identified in the then applicable definition of Certified EHR Technology in 45 CFR part 170. For example, for 2013, the applicable definition of Certified EHR Technology identifies both the 2011 and 2014 editions of the electronic health record certification criteria and the 2014 edition. Therefore, in 2013, software certified to meet either the 2011 edition or the 2014 edition could satisfy the exception provision as we propose to modify it. The current definition of Certified EHR Technology applicable for 2014, however, identifies only the 2014 edition. Thus, based on that definition, in 2014, only software certified to the 2014 edition could satisfy our proposed, modified provision. Future modifications to the definition of Certified EHR Technology could result in the identification of other editions to which software could be certified and satisfy our proposed, modified provision. As we stated in the 2006 final rule (71 FR 45156), we understand ''that the ability of software to be interoperable is evolving as technology develops. In assessing whether software is interoperable, we believe the appropriate inquiry is whether the software is as interoperable as feasible given the prevailing state of technology at the time the items or services are provided to the physician recipient.'' We believe our proposed change is consistent with that understanding and our objective of ensuring that products are certified to the current standard of interoperability when they are donated. We seek

[2] 42 CFR 1001.952(y).

[3] See (70 FR 59186) and (71 FR 45155).

[4] See 42 U.S.C. 300jj–11(c)(5).

comment on our proposal, including if removing the 12-month period would impact donations and whether we should consider retaining it as an additional means of determining eligibility under the deeming provision.

B. The Electronic Prescribing Provision

Our current electronic health records exception at § 411.357(w)(11) specifies that the donated software must ''contain [* * *] electronic prescribing capability, either through an electronic prescribing component or the ability to interface with the physician's existing electronic prescribing system that meets the applicable standards under Medicare Part D at the time the items and services are provided.'' In the preamble to the August 2006 final rule (71 FR 45153), we stated that we included ''this requirement, in part, because of the critical importance of electronic prescribing in producing the overall benefits of health information technology, as evidenced by section 101 of the [Medicare Prescription Drug, Improvement, and Modernization Act of 2003 (MMA), Public Law 108–173].'' We also noted at (71 FR 45153), it was ''our understanding that most electronic health records systems already include an electronic prescribing component.''

We continue to believe in the critical importance of electronic prescribing. However, in light of developments since the August 2006 final rule, we do not believe that it is necessary to retain a requirement related to electronic prescribing capability in the electronic health records exception. First, Congress subsequently enacted legislation addressing electronic prescribing. In 2008, Congress passed the Medicare Improvements for Patients and Providers Act of 2008 (MIPPA), Pub. L. 110–275. Section 132 of MIPPA authorized an electronic prescribing incentive program (starting in 2009) for certain types of eligible professionals. Further, in 2009, Congress passed the Health Information Technology for Economic and Clinical Health (HITECH) Act, Title XIII of Division A and Title IV of Division B of the American Recovery and Reinvestment Act of 2009 (ARRA), Pub. L. 111–5. The HITECH Act at 42 U.S.C. 1395w–4(o), 1395ww(n), 1395f(l)(3), and 1396b(t) authorizes us to establish Medicare and Medicaid electronic health record incentive programs for certain eligible professionals, eligible hospitals, and critical access hospitals. The HITECH Act requires that eligible professionals under the Medicare and Medicaid electronic health record incentive programs demonstrate meaningful use of certified electronic health record technology, including the use of electronic prescribing. Second, the industry has made great progress related to electronic prescribing. Recent analysis by ONC notes an increase in the percentage of physicians electronic prescribing via electronic health record technology from 7 percent in 2008 to 48 percent in 2012, reflecting rapid increases over the past few years in the rate of electronic health record-based electronic prescribing capabilities.[5] Furthermore, the rules recently published to implement Stage 2 of the EHR Incentive Programs (77 FR 54198 and 77 FR 53989), continue to encourage physicians' use of electronic prescribing technology.

In light of these developments, we propose to delete the electronic prescribing condition at § 411.357(w)(11).

We believe that there are sufficient alternative policy drivers supporting the adoption of electronic prescribing capabilities. We also note that electronic prescribing technology would remain eligible for donation under the electronic health records exception or under the electronic prescribing exception at 42 CFR 411.357(v). We note that, unlike other provisions in the exception, the electronic prescribing condition was not imposed to satisfy the statutory requirement that regulatory exceptions promulgated under section 1877(b)(4) of the Act pose no risk of program or patient abuse. Rather, the condition was imposed to further the policy of encouraging donations that would produce the overall benefits of health information technology. Accordingly, we do not believe that removing the electronic prescribing condition would pose a risk of program or patient abuse for donations made under this exception.

C. The Sunset Provision

The electronic health records exception is scheduled to sunset on December 31, 2013. In adopting this condition of the electronic health records exception, we acknowledged ''that the need for donations of electronic health records technology should diminish substantially over time as the use of such technology becomes a standard and expected part of medical practice.'' Some have suggested that we extend the sunset date or even remove the sunset provision entirely.

In recent years, electronic health record technology adoption has risen dramatically, largely as a result of the HITECH Act in 2009. For example, see, Farzad Mostashari, M.D., ScM., National Coordinator, ONC, U.S. Department of Health and Human Services, Testimony before the Subcommittee on Technology and Innovation Committee on Science and Technology, available at *http://science.house.gov/sites/republicans.science.house.gov/files/documents/HHRG-112-SY19-WState-FMostashari-20121114.pdf*, and HHS News Release, ''More than 100,000 health care providers paid for using electronic health records,'' June 19, 2012, available at *http://www.hhs.gov/news/press/2012pres/06/20120619a.html;* see also OIG, OEI Report OEI–04–10–00184, ''Memorandum Report: Use of Electronic Health Record Systems in 2011 Among Medicare Physicians Providing Evaluation and Management Services,'' June 2012, available at *https://oig.hhs.gov/oei/reports/oei-04-10-00184.pdf*. However, while the industry has made great progress, use of such technology has not yet been universally adopted nationwide, and continued electronic health record technology adoption remains an important Departmental goal. We continue to believe that, as this goal is achieved, the need for an exception for donations of such technology should continue to diminish over time. Accordingly, we propose to extend the sunset date to December 31, 2016. We selected this date because it corresponds to the last year in which one may receive a Medicare electronic health record incentive payment and the last year in which one may initiate participation in the Medicaid electronic health record incentive program. For more information, see ''CMS Medicare and Medicaid EHR Incentive Payment Milestone Timeline,'' available at *Guidance/Legislation/EHRIncentivePrograms/downloads/EHRIncentProgtimeline508V1.pdf*. As an alternative to this proposed, extended sunset date of December 31, 2016, we are also considering establishing a later sunset date. For example, we are considering extending the sunset date to December 31, 2021, which corresponds to the end of the electronic health records Medicaid incentives. While these sunset dates are associated with specific Medicare and Medicaid electronic health record incentive programs, we recognize that not all health care providers to whom donations can be made are eligible for such incentives. These health care providers include, for example, many in the mental health and behavioral health communities as well as long-term and

[5] State Variation in E-Prescribing Trends in the United States—available at: *http://www.healthit.gov/sites/default/files/us_e-prescribingtrends_onc_brief_4_nov2012.pdf.*

post-acute care facilities. We specifically solicit comment on our proposed extension of the sunset date to December 31, 2016. We also seek comment on whether we should, as an alternative, select a later sunset date and what that date should be.

D. Additional Proposals and Considerations

1. Protected Donors

As we stated in the preamble to the August 2006 final rule (71 FR 45156) for the electronic health records exception, ''[w]e [originally] proposed to limit the scope of protected donors under the electronic health records exception to hospitals, group practices, [prescription drug plan (PDP)] sponsors, and [Medicare Advantage (MA)] organizations, consistent with the MMA-mandated donors for the electronic prescribing exception.'' In the August 2006 final rule (71 FR 45156), we indicated that we selected these donors because they have a ''direct and primary patient care relationship and a central role in the health care delivery infrastructure that would justify protection under the exception for the provision of electronic health records technology that would not be appropriate for other types of providers and suppliers, including providers and suppliers of ancillary services.'' However, in the August 2006 final rule (71 FR 45157), we expanded the exception to permit donations by any DHS entity, stating that such an expansion ''will expedite adoption of electronic records,'' which was an important public policy goal. We also stated (71 FR 45157) that, ''the requirements that donated software be interoperable and that physicians contribute 15 percent to the cost of the donated technology, and the limited duration of the exception * * *, if met, [would] provide adequate protection against program and patient abuse.''

Notwithstanding this conclusion, we have concerns about the potential for abuse of the exception by other types of providers and suppliers (including providers and suppliers of ancillary services who do not have a direct and primary patient care relationship and a central role in the health care delivery infrastructure). The OIG also indicated that it has concerns related to the potential for laboratories and other ancillary service providers to abuse its safe harbor. The OIG has received comments suggesting that abusive donations are being made under the electronic health records safe harbor. For example, some of the responses OIG received to its annual solicitation of safe harbors and special fraud alerts (see the December 28, 2012 **Federal Register** (77 FR 76434)) allege that donors are using the safe harbor to provide referral sources with items and services that appear to support the interoperable exchange of information on their face, but, in practice, lead to data and referral lock-in. Because of the close nexus of our regulations, we believe it is also prudent for us to explore the possibility of such providers and suppliers abusing the exception.

Therefore, we propose to limit the scope of protected donors under the electronic health records exception, with the continued goal of promoting adoption of interoperable electronic health record technology that benefits patient care while reducing the likelihood that donors would misuse electronic health record technology donations to secure referrals. In this regard, we are considering revising the exception to cover only the original MMA-mandated donors: hospitals, group practices, PDP sponsors, and MA organizations. We are considering, and seek comments regarding, whether other individuals or entities with front-line patient care responsibilities across health care settings, such as safety net providers, should be included, and, if so, which ones. Alternatively, we are considering retaining the current definition of protected donors, but excluding specific types of donors. We are considering excluding suppliers of ancillary services associated with a high risk of fraud and abuse, because the donations by such suppliers may be more likely to be motivated by a purpose of securing future business than by a purpose of better coordinating care for beneficiaries across health care settings. In particular, we are considering excluding laboratory companies from the scope of permissible donors as their donations have been the subject of complaints. We are also considering excluding other high risk categories as well, such as durable medical equipment (DME) suppliers and independent home health agencies. We seek comment on the alternatives under consideration, including comments, with supporting reasons, regarding particular types of providers and suppliers that should or should not be protected donors given the goals of the exception.

2. Data Lock-In and Exchange

In the preceding section, we propose to limit the scope of permissible donors as a means to prevent donations that subvert the intent of the exception—because they are used to lock in referrals—from receiving protection under the exception. We are also considering inclusion of new or modified conditions in the exception as an alternative or additional means of achieving that result. We are particularly interested in new or modified conditions that would help achieve two related goals. The first goal is to prevent the misuse of the exception in a way that results in data and referral lock-in. The second, related goal is to encourage the free exchange of data (in accordance with protections for privacy). These goals reflect our interest, which we discussed previously, in promoting the adoption of interoperable electronic health record technology that benefits patient care while reducing the likelihood that donors would misuse electronic health record technology donations to secure referrals. The August 2006 final rule requires donated software to be interoperable at the time it is donated to the physician. The software is deemed interoperable if it is certified as described previously. However, it has been suggested that even when donated software meets the interoperability requirements of the rule, policies and practices sometimes affect the true ability of electronic health record technology items and services to be used to exchange information across organizational and vendor boundaries.[6] We seek comments on what new or modified conditions could be added to the exception for electronic health records to achieve our two goals and whether those conditions, if any, should be in addition to, or in lieu of, our proposal to limit the scope of permissible donors. For example, § 411.357(w)(3) requires, as a condition of the exception that ''[t]he donor (or any person on the donor's behalf) [* * *] not take any action to limit or restrict the use, compatibility, or interoperability of the items or services with other electronic prescribing or electronic health records systems.'' We solicit comment with regard to whether this condition could be modified to reduce the possibility of lock-in.

3. Covered Technology

We received questions concerning whether certain items or services, for example services that enable the interoperable exchange of electronic

[6] For more information on interoperability in health IT, see ''EHR Interoperability'' on the HealthIT.gov Web site at *http://www.healthit.gov/providers-professionals/ehr-interoperability.* For further discussion of interoperability and other health IT issues, see Arthur L. Kellerman and Spencer S. Jones, ANALYSIS & COMMENTARY: What It Will Take to Achieve The As-Yet-Unfulfilled Promises Of Health Information Technology, Health Affairs. January 2013 32:163–68.

health records data, fall within the scope of covered technology under the exception for electronic health records. The answer to such questions depends on the exact items or services that are being donated. In the August 2006 final rule (71 FR 45151), we explained that we interpreted ''software, information technology and training services necessary and used predominantly'' for electronic health records purposes to include the following, by way of example: ''interface and translation software; rights, licenses, and intellectual property related to electronic health records software; connectivity services, including broadband and wireless internet services; clinical support and information services related to patient care (but not separate research or marketing support services); maintenance services; secure messaging (for example, permitting physicians to communicate with patients through electronic messaging); and training and support services (such as access to help desk services).'' It also has been suggested that we modify the regulatory text (that is, § 411.357(w)) of the electronic health record exception to explicitly reflect this interpretation. We believe that the current regulatory text, when read in light of the preamble discussion, is sufficiently clear concerning the scope of covered technology, but we seek input from the public regarding this issue.

III. Collection of Information Requirements

The provisions in this proposed rule would not impose any new or revised information collection, recordkeeping, or disclosure requirements. Consequently, this rule does not need additional Office of Management and Budget review under the authority of the Paperwork Reduction Act of 1995.

IV. Response to Comments

Because of the large number of public comments we normally receive on **Federal Register** documents, we are not able to acknowledge or respond to them individually. We will consider all comments we receive by the date and time specified in the ''DATES'' section of this preamble, and, when we proceed with a subsequent document, we will respond to the comments in the preamble to that document.

V. Regulatory Impact Statement

We have examined the impact of this rule as required by Executive Order 12866 on Regulatory Planning and Review (September 30, 1993), Executive Order 13563 on Improving Regulation and Regulatory Review (January 18, 2011), the Regulatory Flexibility Act (RFA) (September 19, 1980, Pub. L. 96–354), section 1102(b) of the Social Security Act, section 202 of the Unfunded Mandates Reform Act of 1995 (March 22, 1995; Pub. L. 104–4), Executive Order 13132 on Federalism (August 4, 1999) and the Congressional Review Act (5 U.S.C. 804(2)).

Executive Orders 12866 and 13563 direct agencies to assess all costs and benefits of available regulatory alternatives and, if regulation is necessary, to select regulatory approaches that maximize net benefits (including potential economic, environmental, public health and safety effects, distributive impacts, and equity). A regulatory impact analysis (RIA) must be prepared for major rules with economically significant effects ($100 million or more in any 1 year). We believe this proposed rule does not reach the economic threshold for being considered economically significant, and thus, is not considered a major rule. We solicit comment on the assumptions and findings presented in this initial regulatory impact analysis.

The proposed rule would extend the exception's expiration date (currently set at December 31, 2013), update the provision under which electronic health records software is deemed interoperable, and remove the requirement related to electronic prescribing capability. Neither this proposed rule nor the regulations it amends requires any entity to donate electronic health record technology to physicians, but we expect these proposed changes to continue to facilitate the adoption of electronic health record technology by filling a gap rather than creating the primary means by which physicians would adopt this technology.

The summation of the economic impact analysis regarding the effects of electronic health records in the ambulatory setting, that is presented in the August 2006 final rule (71 FR 45164) still pertains to this proposed rule. However, since the August 2006 final rule, several developments have occurred to make us conclude that it is no longer necessary to retain a requirement related to electronic prescribing capability in the electronic health records exception. These developments include: (1) in 2008, Congress passed the Medicare Improvements for Patients and Providers Act of 2008 (MIPPA), Pub. L. 110–275; (2) in 2009, Congress passed the Health Information Technology for Economic and Clinical Health (HITECH) Act, Title XIII of Division A and Title IV of Division B of the American Recovery and Reinvestment Act of 2009 (ARRA), Pub. L. 111–5; and (3) an increase over the past few years in the rate of electronic health record-based electronic prescribing capabilities.

As discussed in more detail earlier in the preamble, section 132 of MIPPA authorized an electronic prescribing incentive program (starting in 2009) for certain types of eligible professionals. The HITECH Act authorizes us to establish Medicare and Medicaid electronic health record incentive programs for certain eligible professionals, eligible hospitals, and critical access hospitals. Also, the HITECH Act requires that eligible professionals under the Medicare and Medicaid electronic health record incentive programs demonstrate meaningful use of certified electronic health record technology, including the use of electronic prescribing. Specifically, the final rule of the Stage 2 meaningful use (September 4, 2012; 77 FR 53968) includes more demanding requirements for electronic prescribing and identifies electronic prescribing as a required core measure. As a result, beginning in calendar year (CY) 2015 an eligible professional risks a reduction in the Medicare Physician Fee schedule amount that will otherwise apply for covered professional services if they are not a meaningful EHR user for an EHR reporting period during that year. Our intent remains to allow physicians not to receive products or services they already own, but rather to receive electronic health record technology that advances their adoption and meaningful use. Lastly, according to ONC, electronic prescribing by physicians using electronic health record technology has increased from 7 percent in December 2008 to approximately 48 percent in June 2012.[7] Furthermore, the rules recently published to implement Stage 2 of the EHR Incentive Programs (77 FR 54198 and 77 FR 53989), continue to encourage physicians' use of electronic prescribing technology. Due to data limitations; however, we are unable to accurately estimate the level of impact the electronic health records exception has contributed to the increase in electronic prescribing. Therefore, we believe as a result of these legislative and regulatory developments advancing in parallel, the increase in the adoption of electronic prescribing using electronic health record technology will continue without

[7] State Variation in E-Prescribing Trends in the United States—available at: *http://www.healthit.gov/sites/default/files/us_e-prescribingtrends_onc_brief_4_nov2012.pdf.*

making it necessary to retain the electronic prescribing capability requirement in the electronic health records exception.

The RFA requires agencies to analyze options for regulatory relief of small entities, if a rule has a significant impact on a substantial number of small entities. For purposes of the RFA, small entities include small businesses, nonprofit organizations, and small governmental jurisdictions. Most hospitals and most other providers and suppliers are small entities, either by nonprofit status or by having revenues of $7.0 million to $34.5 million in any 1 year. Individuals and States are not included in the definition of a small entity. The Secretary has determined that this proposed rule would not have a significant economic impact on a substantial number of small entities.

In addition, section 1102(b) of the Act requires us to prepare a regulatory impact analysis if a rule may have a significant impact on the operations of a substantial number of small rural hospitals. This analysis must conform to the provisions of section 603 of the RFA. For purposes of section 1102(b) of the Act, we define a small rural hospital as a hospital that is located outside of a Metropolitan Statistical Area for Medicare payment regulations and has fewer than 100 beds. The Secretary has determined, that this proposed rule would not have a significant impact on the operations of a substantial number of small rural hospitals.

Section 202 of the Unfunded Mandates Reform Act of 1995 also requires that agencies assess anticipated costs and benefits before issuing any rule whose mandates require spending in any 1 year of $100 million in 1995 dollars, updated annually for inflation. In 2013, that threshold is approximately $141 million. This proposed rule would have no consequential effect on State, local, or tribal governments or on the private sector.

Executive Order 13132 establishes certain requirements that an agency must meet when it promulgates a proposed rule (and subsequent final rule) that imposes substantial direct requirement costs on State and local governments, preempts State law, or otherwise has Federalism implications. Since this regulation does not impose any costs on State or local governments, the requirements of Executive Order 13132 are not applicable.

In accordance with the provisions of Executive Order 12866, this rule was reviewed by the Office of Management and Budget.

List of Subjects for 42 CFR Part 411

Kidney diseases, Medicare, Physician Referral, Reporting and recordkeeping requirements.

For the reasons set forth in the preamble, the Centers for Medicare & Medicaid Services proposes to amend 42 CFR part 411 as set forth below:

PART 411—EXCLUSIONS FROM MEDICARE AND LIMITATIONS ON MEDICARE PAYMENT

■ 1. The authority citation for part 411 continues to read as follows:

Authority: Secs. 1102, 1860D–1 through 1860D–42, 1871, and 1877 of the Social Security Act (42 U.S.C. 1302, 1395w–101 through 1395w–152, 1395hh, and 1395nn).

■ 2. Section 411.357 is amended by:

■ A. Revising paragraph (w)(2).

■ B. Removing and reserving paragraph (w)(11).

■ C. In paragraph (w)(13), removing the date ''December 31, 2013'' and adding the date ''December 31, 2016'' in its place.

The revision reads as follows:

§ 411.357 Exceptions to the referral prohibition related to compensation arrangements.

* * * * *

(w) * * *

(2) The software is interoperable (as defined in § 411.351) at the time it is provided to the physician. For purposes of this paragraph (w), software is deemed to be interoperable if a certifying body authorized by the National Coordinator for Health Information Technology has certified the software to any edition of electronic health record certification criteria identified in the then-applicable definition of Certified EHR Technology in 45 CFR part 170, on the date it is provided to the physician.

* * * * *

(Catalog of Federal Domestic Assistance Program No. 93.773, Medicare—Hospital Insurance; and Program No. 93.774, Medicare—Supplementary Medical Insurance Program)

Dated: January 24, 2013.

Marilyn Tavenner,

Acting Administrator, Centers for Medicare & Medicaid Services.

Approved: March 7, 2013

Kathleen Sebelius,

Secretary, Department of Health and Human Services.

[FR Doc. 2013–08312 Filed 4–8–13; 4:15 pm]

BILLING CODE 4120–01–P

DEPARTMENT OF HEALTH AND HUMAN SERVICES

Office of Inspector General

42 CFR Part 1001

RIN 0936–AA03

Medicare and State Health Care Programs: Fraud and Abuse; Electronic Health Records Safe Harbor Under the Anti-Kickback Statute

AGENCY: Office of Inspector General (OIG), HHS.

ACTION: Proposed rule.

SUMMARY: In this proposed rule, the Office of Inspector General (OIG) proposes to amend the safe harbor regulation concerning electronic health records items and services, which defines certain conduct that is protected from liability under the Federal anti-kickback statute in the Social Security Act (the Act). The proposed amendments include an update to the provision under which electronic health records software is deemed interoperable; removal of the electronic prescribing capability requirement; and extension of the sunset provision. In addition, OIG is requesting public comment on other changes it is considering.

DATES: To assure consideration, comments must be delivered to the address provided below by no later than 5 p.m. Eastern Standard Time on June 10, 2013.

ADDRESSES: In commenting, please reference file code OIG–404–P. Because of staff and resource limitations, we cannot accept comments by facsimile (fax) transmission. However, you may submit comments using one of three ways (no duplicates, please):

1. *Electronically.* You may submit electronically through the Federal eRulemaking Portal at *http://www.regulations.gov.* (Attachments should be in Microsoft Word, if possible.)

2. *By regular, express, or overnight mail.* You may mail your printed or written submissions to the following address: Patrice Drew, Office of Inspector General, Department of Health and Human Services, Attention: OIG–404–P, Room 5541C, Cohen Building, 330 Independence Avenue SW., Washington, DC 20201.

Please allow sufficient time for mailed comments to be received before the close of the comment period.

3. *By hand or courier.* You may deliver, by hand or courier, before the close of the comment period, your

printed or written comments to: Patrice Drew, Office of Inspector General, Department of Health and Human Services, Cohen Building, Room 5541C, 330 Independence Avenue SW., Washington, DC 20201.
Because access to the interior of the Cohen Building is not readily available to persons without Federal Government identification, commenters are encouraged to schedule their delivery with one of our staff members at (202) 619–1368.

Inspection of Public Comments: All comments received before the end of the comment period will be posted on *http://www.regulations.gov* for public viewing. Hard copies will also be available for public inspection at the Office of Inspector General, Department of Health and Human Services, Cohen Building, 330 Independence Avenue SW., Washington, DC 20201, Monday through Friday from 8:30 a.m. to 4 p.m. To schedule an appointment to view public comments, phone (202) 619–1368. Comments received by OIG will be shared with the Centers for Medicare & Medicaid Services (CMS).

FOR FURTHER INFORMATION CONTACT: James A. Cannatti III or Heather L. Westphal, Office of Counsel to the Inspector General, (202) 619–0335.

SUPPLEMENTARY INFORMATION:

Social Security Act Citation	United States Code Citation
1128B	42 U.S.C. 1320a–7b

Executive Summary

A. Purpose of the Regulatory Action

Pursuant to section 14 of the Medicare and Medicaid Patient and Program Protection Act of 1987 and its legislative history, Congress required the Secretary of Health and Human Services (the Secretary) to promulgate regulations setting forth various ''safe harbors'' to the anti-kickback statute, which would be evolving rules that would be periodically updated to reflect changing business practices and technologies in the health care industry. In accordance with this authority, OIG published a safe harbor to protect certain arrangements involving the provision of interoperable electronic health records software or information technology and training services. The final rule for this safe harbor was published on August 8, 2006 (71 FR 45110) and is scheduled to sunset on December 31, 2013 (42 CFR 1001.952(y)(13)). The purpose of this proposed rule is to update certain aspects of the electronic health records safe harbor and to extend the sunset date.

B. Summary of the Major Provisions

This proposed rule would amend the current safe harbor in at least three ways. First, the proposed rule would update the provision under which electronic health records software is deemed interoperable. Second, we propose to remove the requirement related to electronic prescribing capability from the safe harbor. Third, we propose to extend the sunset date of the safe harbor. In addition to these proposals, we are soliciting public comment on other possible amendments to the safe harbor, including limiting the scope of protected donors and adding or modifying conditions to limit the risk of data and referral lock-in.

C. Costs and Benefits

The proposed rule would modify an already-existing safe harbor to the anti-kickback statute. This safe harbor permits certain entities to provide technology-related items and services to certain parties to be used to create, maintain, transmit, or receive electronic health records. Parties may voluntarily seek to comply with safe harbors so that they have assurance that their conduct will not subject them to any enforcement actions under the anti-kickback statute, but safe harbors do not impose new requirements on any party.

This is not a major rule, as defined at 5 U.S.C. 804(2). It is also not economically significant, because it will not have a significant effect on program expenditures, and there are no additional substantive costs to implement the resulting provisions. The proposed rule would update the provision under which electronic health records software is deemed interoperable, remove the requirement related to electronic prescribing capability, and extend the safe harbor's sunset date (currently set at December 31, 2013). We expect these proposed changes to continue to facilitate the adoption of electronic health records technology.

I. Background

A. Anti-Kickback Statute and Safe Harbors

Section 1128B(b) of the Social Security Act (the Act) (42 U.S.C. 1320a–7b(b), the anti-kickback statute) provides criminal penalties for individuals or entities that knowingly and willfully offer, pay, solicit, or receive remuneration in order to induce or reward the referral of business reimbursable under any of the Federal health care programs, as defined in section 1128B(f) of the Act. The offense is classified as a felony and is punishable by fines of up to $25,000 and imprisonment for up to 5 years. Violations of the anti-kickback statute may also result in the imposition of civil monetary penalties (CMP) under section 1128A(a)(7) of the Act (42 U.S.C. 1320a–7a(a)(7)), program exclusion under section 1128(b)(7) of the Act (42 U.S.C. 1320a–7(b)(7)), and liability under the False Claims Act (31 U.S.C. 3729–33).

The types of remuneration covered specifically include, without limitation, kickbacks, bribes, and rebates, whether made directly or indirectly, overtly or covertly, in cash or in kind. In addition, prohibited conduct includes not only the payment of remuneration intended to induce or reward referrals of patients, but also the payment of remuneration intended to induce or reward the purchasing, leasing, or ordering of, or arranging for or recommending the purchasing, leasing, or ordering of, any good, facility, service, or item reimbursable by any Federal health care program.

Because of the broad reach of the statute, concern was expressed that some relatively innocuous commercial arrangements were covered by the statute and, therefore, potentially subject to criminal prosecution. In response, Congress enacted section 14 of the Medicare and Medicaid Patient and Program Protection Act of 1987, Public Law 100–93 (section 1128B(b)(3)(E) of the Act; 42 U.S.C. 1320a–7b(B)(3)(E)), which specifically required the development and promulgation of regulations, the so-called ''safe harbor'' provisions, that would specify various payment and business practices that would not be subject to sanctions under the anti-kickback statute, even though they may potentially be capable of inducing referrals of business under the Federal health care programs. Since July 29, 1991, we have published in the **Federal Register** a series of final regulations establishing ''safe harbors'' in various areas.[1] These OIG safe harbor provisions have been developed ''to limit the reach of the statute somewhat by permitting certain non-abusive arrangements, while encouraging beneficial or innocuous arrangements.'' 56 FR 35952, 35958 (July 29, 1991).

Health care providers and others may voluntarily seek to comply with safe harbors so that they have the assurance that their business practices will not be subject to any enforcement action under the anti-kickback statute, the CMP provision for anti-kickback violations,

[1] 56 FR 35952 (July 29, 1991); 61 FR 2122 (Jan. 25, 1996); 64 FR 63518 (Nov. 19, 1999); 64 FR 63504 (Nov. 19, 1999); 66 FR 62979 (Dec. 4, 2001); 71 FR 45109 (Aug. 8, 2006); and 72 FR 56632 (Oct. 4, 2007).

or the program exclusion authority related to kickbacks. In giving the Department of Health and Human Services (Department or HHS) the authority to protect certain arrangements and payment practices under the anti-kickback statute, Congress intended the safe harbor regulations to be updated periodically to reflect changing business practices and technologies in the health care industry.

B. The Electronic Health Records Safe Harbor

In the October 11, 2005 **Federal Register** (70 FR 59015), we published a notice of proposed rulemaking (the 2005 Proposed Rule) that would promulgate two safe harbors to address donations of certain electronic health records software and directly related training services, using our authority at section 1128B(b)(3)(E) of the Act. *See* 70 FR 59015, 59021 (Oct. 11, 2005). One proposed safe harbor would have protected certain arrangements involving donations of electronic health records technology made before the adoption of certification criteria. The other proposed safe harbor would have protected certain arrangements involving nonmonetary remuneration in the form of interoperable electronic health records software certified in accordance with criteria adopted by the Secretary of HHS (Secretary) and directly related training services. In the same issue of the **Federal Register** (70 FR 59182 (Oct. 11, 2005)), CMS simultaneously proposed similar exceptions to the physician self-referral law.

On August 8, 2006 (71 FR 45110), we published a final rule (the 2006 Final Rule) that, among other things, finalized a safe harbor [2] at 42 CFR 1001.952(y) (the electronic health records safe harbor) for protecting certain arrangements involving interoperable electronic health records software or information technology and training services. In the same issue of the **Federal Register** (71 FR 45140 (Aug. 8, 2006)), CMS simultaneously published similar final regulations at 42 CFR 411.357(w). The electronic health records safe harbor is scheduled to sunset on December 31, 2013. 42 CFR 1001.952(y)(13).

The present proposed rule sets forth certain proposed changes to the electronic health records safe harbor. CMS is proposing almost identical changes to the physician self-referral law electronic health records exception [3] elsewhere in this issue of the **Federal Register**. We attempted to ensure as much consistency as possible between our proposed safe harbor changes and CMS's proposed exception changes, despite the differences in the respective underlying statutes. We intend the final rules to be similarly consistent. Because of the close nexus between this proposed rule and CMS's proposed rule, we may consider comments submitted in response to CMS's proposed rule when crafting our final rule. Similarly, CMS may consider comments submitted in response to this proposed rule in crafting its final rule.

II. Provisions of the Proposed Rule

A. The Deeming Provision

Our current electronic health records safe harbor specifies at 42 CFR 1001.952(y)(2) that the donated software must be ''interoperable at the time it is provided to the recipient.'' As discussed in a recently issued Request for Information (RFI) from the Department, ''HHS envisions an information rich, person-centered, high performance health care system where every health care provider has access to longitudinal data on patients they treat to make evidence-based decisions, coordinate care and improve health outcomes.'' 78 FR 14793, 14795 (Mar. 7, 2013). Additionally, as emphasized in the RFI, interoperability will play a critical role in supporting this vision. Interoperability is also an important concept in the context of the electronic health records safe harbor. Although we have long been concerned that parties could use the offer or donation of technology to capture referrals, we have viewed interoperability as a potential mitigating factor, or safeguard, to justify other safe harbor conditions that are less stringent than might otherwise be appropriate in the absence of interoperability. This is because if the donated technology is interoperable, the recipient will be able to use it to transmit electronic health records not only to the donor, but to others, including competitors of the donor, and will not be ''locked in'' to communications with the donor only. *See* 70 FR 59015, 59023 (Oct. 11, 2005); 71 FR 45110, 45126 (Aug. 8, 2006). For purposes of this safe harbor, ''interoperable'' means ''able to communicate and exchange data accurately, effectively, securely, and consistently with different information technology systems, software applications, and networks, in various settings, and exchange data such that the clinical or operational purpose and meaning of the data are preserved and unaltered.'' Note to paragraph (y) of 42 CFR 1001.952. The current provisions of the electronic health records safe harbor state that for purposes of meeting the condition set forth in subparagraph (y)(2), ''software is deemed to be interoperable if a certifying body recognized by the Secretary has certified the software within no more than 12 months prior to the date it is provided to the recipient.'' 42 CFR 1001.952(y)(2). We propose to update two aspects of this deeming provision to reflect the current Office of the National Coordinator for Health Information Technology (ONC) certification program for electronic health record technology.

First, we propose to modify the provision to reflect that ONC is responsible for ''recognizing'' certifying bodies, as referenced in this provision. *See* 42 U.S.C. 300jj–11(c)(5). To become a certifying body ''recognized'' by the Secretary, an entity must successfully complete an authorization process established by ONC. This authorization process constitutes the Secretary's recognition of a certifying body. Accordingly, we propose to revise the phrase ''recognized by the Secretary'' in the second sentence of subparagraph (y)(2) to read ''authorized by the National Coordinator for Health Information Technology.''

Second, we propose to modify the portion of this provision concerning the time period within which the software must have been certified. Currently, the electronic health records safe harbor deeming provision requires that software must have been certified within no more than 12 months prior to the date of donation in order to ensure that products have an up-to-date certification. Subsequent to issuing the final electronic health records safe harbor, ONC developed a regulatory process for adopting certification criteria and standards. That process is anticipated to occur on a 2-year regulatory interval. (For more information, *see* ONC's September 4, 2012 Final Rule titled ''Health Information Technology: Standards, Implementation Specifications, and Certification Criteria for Electronic Health Record Technology, 2014 Edition; Revisions to the Permanent Certification Program for Health Information Technology'' (77 FR 54163).) Further, some certification criteria could remain unchanged from one edition of the electronic health record certification criteria to the next. Thus, the current 12-month timeframe is

[2] For the reasons discussed in more detail in the preamble to the 2006 Final Rule, we abandoned the proposal to have separate pre- and post-interoperability safe harbors for electronic health records arrangements. *See* 71 FR 45110, 45121 (Aug. 8, 2006).

[3] 42 CFR 411.357(w).

not in line with the anticipated 2-year regulatory interval and does not account for the fact that some certification criteria may not change from one edition to the next. Therefore, we propose to modify this portion of the safe harbor by removing the 12-month timeframe and substituting a provision that more closely tracks the current ONC certification program. Accordingly, we propose that software would be eligible for deeming if, on the date it is provided to the recipient, it has been certified to any edition of the electronic health record certification criteria that is identified in the then-applicable definition of Certified EHR Technology in 45 CFR part 170. For example, for 2013, the applicable definition of Certified EHR Technology identifies both the 2011 and the 2014 editions of the electronic health record certification criteria. Therefore, in 2013, software certified to meet either the 2011 edition or the 2014 edition could satisfy the safe harbor provision as we proposed to modify it. The current definition of Certified EHR Technology applicable for 2014, however, identifies only the 2014 edition. Thus, based on that definition, in 2014, only software certified to the 2014 edition could satisfy our proposed, modified provision. Future modifications to the definition of Certified EHR Technology could result in the identification of other editions to which software could be certified and satisfy our proposed, modified provision. As we stated in the 2006 Final Rule, we understand ''that the ability of software to be interoperable is evolving as technology develops. In assessing whether software is interoperable, we believe the appropriate inquiry is whether the software is as interoperable as feasible given the prevailing state of technology at the time [it] is provided to the recipient.'' 71 FR 45110, 45126 (Aug. 8, 2006). We believe our proposed change is consistent with that understanding and our objective of ensuring that products are certified to the current standard of interoperability when they are donated. We seek comment on our proposal, including if removing the 12-month period will impact donations and whether we should consider retaining it as an additional means of determining eligibility under the deeming provision.

B. The Electronic Prescribing Provision

Our current electronic health records safe harbor specifies at 42 CFR 1001.952(y)(10) that the donated software must ''contain [ ] electronic prescribing capability, either through an electronic prescribing component or the ability to interface with the recipient's existing electronic prescribing system, that meets the applicable standards under Medicare Part D at the time the items and services are provided.'' In the preamble to the 2006 Final Rule, we stated that we included ''this requirement, in part, because of the critical importance of electronic prescribing in producing the overall benefits of health information technology, as evidenced by section 101 of the [Medicare Prescription Drug, Improvement, and Modernization Act of 2003 (MMA), Pub. L. 108–173].'' 71 FR 45110, 45125 (Aug. 8, 2006). As we noted, it was ''our understanding that most electronic health records systems already include an electronic prescribing component.'' *Id.*

We continue to believe in the critical importance of electronic prescribing. However, in light of developments since the 2006 Final Rule, we do not believe that it is necessary to retain a requirement related to electronic prescribing capability in the electronic health records safe harbor. First, Congress subsequently enacted legislation addressing electronic prescribing. In 2008, Congress passed the Medicare Improvements for Patients and Providers Act of 2008 (MIPPA), Pub. L. 110–275. Section 132 of MIPPA authorized an electronic prescribing incentive program (starting in 2009) for certain types of eligible professionals. Further, in 2009, Congress passed the Health Information Technology for Economic and Clinical Health (HITECH) Act, Title XIII of Division A and Title IV of Division B of the American Recovery and Reinvestment Act of 2009 (ARRA), Pub. L. 111–5. The HITECH Act authorizes CMS to establish Medicare and Medicaid electronic health record incentive programs for certain eligible professionals, eligible hospitals, and critical access hospitals. 42 U.S.C. 1395w–4(o), 1395ww(n), 1395f(l)(3), and 1396b(t). The HITECH Act requires that eligible professionals under the Medicare and Medicaid electronic health record incentive programs demonstrate meaningful use of certified electronic health record technology, including the use of electronic prescribing. 42 U.S.C. 1395w–4(o)(2)(A)(i). Second, the industry has made great progress related to electronic prescribing. Recent analysis by ONC notes an increase in the percentage of physicians electronically prescribing via electronic health record technology from 7 percent in 2008 to 48 percent in 2012, reflecting rapid increases over the past few years in the rate of electronic health record-based electronic prescribing capabilities.[4] Furthermore, the regulations recently published to implement Stage 2 of the EHR Incentive Programs continue to encourage physicians' use of electronic prescribing technology. *See* 77 FR 53968, 53989 (Sept. 4, 2012); 77 FR 54163, 54198 (Sept. 4, 2012).

In light of these developments, we propose to delete the electronic prescribing condition at 42 CFR 1001.952(y)(10). We believe that there are sufficient alternative policy drivers supporting the adoption of electronic prescribing capabilities. We also note that electronic prescribing technology would remain eligible for donation under the electronic health records safe harbor or under the electronic prescribing safe harbor at 42 CFR 1001.952(x). Additionally, we considered whether removing this condition would increase the risk of fraud or abuse posed by donations made under the safe harbor; we do not believe that it would.

C. The Sunset Provision

The electronic health records safe harbor is scheduled to sunset on December 31, 2013. In adopting this condition of the electronic health records safe harbor, we acknowledged ''that the need for a safe harbor for donations of electronic health records technology should diminish substantially over time as the use of such technology becomes a standard and expected part of medical practice.'' 71 FR 45110, 45133 (Aug. 8, 2006). Some have suggested that we extend the sunset date or even remove the sunset provision entirely.

In recent years, electronic health record technology adoption has risen dramatically, largely as a result of the HITECH Act in 2009. For example, see Farzad Mostashari, M.D., ScM., National Coordinator, ONC, U.S. Department of Health and Human Services, Testimony before the Subcommittee on Technology and Innovation Committee on Science and Technology, available at *http://science.house.gov/sites/republicans.science.house.gov/files/documents/HHRG-112-SY19-WState-FMostashari-20121114.pdf* and HHS News Release, ''More than 100,000 health care providers paid for using electronic health records,'' June 19, 2012, available at *http://www.hhs.gov/news/press/2012pres/06/20120619a.html*; see also OIG, OEI Report OEI–04–10–00184,

[4] State Variation in E-Prescribing Trends in the United States—available at: *http://www.healthit.gov/sites/default/files/us_e-prescribingtrends_onc_brief_4_nov2012.pdf.*

''Memorandum Report: Use of Electronic Health Record Systems in 2011 Among Medicare Physicians Providing Evaluation and Management Services,'' June 2012, available at *https://oig.hhs.gov/oei/reports/oei-04-10-00184.pdf.* However, while the industry has made great progress, use of such technology has not yet been universally adopted nationwide, and continued electronic health record technology adoption remains an important Departmental goal. We continue to believe that as this goal is achieved, the need for a safe harbor for donations of such technology should continue to diminish over time. Accordingly, we propose to extend the sunset date to December 31, 2016. We selected this date because it corresponds to the last year in which one may receive a Medicare electronic health record incentive payment and the last year in which one may initiate participation in the Medicaid electronic health record incentive program. For more information, see ''CMS Medicare and Medicaid EHR Incentive Payment Milestone Timeline,'' available at *http://www.cms.gov/Regulations-and-Guidance/Legislation/EHRIncentivePrograms/downloads/EHRIncentProgtimeline508V1.pdf.* As an alternative to this proposed extended sunset date of December 31, 2016, we are also considering establishing a later sunset date. For example, we are considering extending the sunset date to December 31, 2021, which corresponds to the end of the electronic health record Medicaid incentives. *See id.* While these sunset dates are associated with specific Medicare and Medicaid electronic health record incentive programs, we recognize that not all health care providers to whom donations can be made are eligible for such incentives. These health care providers include, for example, many in the mental health and behavioral health communities as well as long-term and post-acute care facilities. We specifically solicit comment on our proposed extension of the sunset date to December 31, 2016. We also seek comment on whether we should, as an alternative, select a later sunset date and what that date should be.

D. Additional Proposals and Considerations

1. Protected Donors

As we stated in the preamble to the 2006 Final Rule for the electronic health records safe harbor, ''[w]e [originally] proposed to limit the scope of protected donors under § 1001.952(y) to hospitals, group practices, [prescription drug plan (PDP)] sponsors, and [Medicare Advantage (MA)] organizations, consistent with the MMA-mandated donors for the electronic prescribing safe harbor.'' 71 FR 45110, 45127 (Aug. 8, 2006); *see also* 70 FR 59015, 59023 (Oct. 11, 2005). However, ''[m]indful that broad safe harbor protection may significantly further the important public policy goal of promoting electronic health records, and after carefully considering the recommendations of the commenters, we [ ] concluded that the safe harbor should protect any donor that is an individual or entity that provides patients with health care items or services covered by a Federal health care program and submits claims or requests for payment for those items or services (directly or pursuant to reassignment) to Medicare, Medicaid, or other Federal health care programs (and otherwise meets the safe harbor conditions).'' 71 FR 45110, 45127 (Aug. 8, 2006). Notwithstanding this conclusion, we indicated that ''[w]e remain concerned about the potential for abuse by laboratories, durable medical equipment suppliers, and others, but believe that the safe harbor conditions in the [2006 Final Rule] and the fact that the safe harbor is temporary should adequately address our concerns.'' 71 FR 45110, 45128 (Aug. 8, 2006). We went on to state that ''[w]e intend to monitor the situation. If abuses occur, we may revisit our determination.'' *Id.*

We have received comments suggesting that abusive donations are being made under the electronic health records safe harbor. For example, some responses to our annual solicitation of safe harbors and special fraud alerts allege that donors are using the safe harbor to provide referral sources with items and services that appear to support the interoperable exchange of information on their face, but, in practice, lead to data and referral lock-in. *See, e.g., https://oig.hhs.gov/publications/docs/semiannual/2009/semiannual_fall2009.pdf.*

In light of (1) these comments, (2) our continued concern about the potential for fraud and abuse by certain donors that we articulated in the 2006 Final Rule,[5] and (3) the proposed changes to the electronic health records safe harbor conditions discussed in this proposed rule, we propose to limit the scope of protected donors under the electronic health records safe harbor, with the continued goal of promoting adoption of interoperable electronic health record technology that benefits patient care while reducing the likelihood that donors will misuse electronic health record technology donations to secure referrals. In this regard, we are considering revising the safe harbor to cover only the original MMA-mandated donors: hospitals, group practices, PDP sponsors, and MA organizations. We are considering, and seek comments regarding, whether other individuals or entities with front-line patient care responsibilities across health care settings, such as safety net providers, should be included, and, if so, which ones. Alternatively, we are considering retaining the current definition of protected donors, but excluding specific types of donors. Specifically, we are considering excluding suppliers of ancillary services associated with a high risk of fraud and abuse, because donations by such suppliers may be more likely to be motivated by a purpose of securing future business than by a purpose of better coordinating care for beneficiaries across health care settings. In particular, we are considering excluding laboratory companies from the scope of permissible donors as their donations have been the subject of complaints. We are also considering excluding other high-risk categories, such as durable medical equipment suppliers and independent home health agencies. We seek comment on the alternatives under consideration, including comments, with supporting reasons, regarding particular types of providers and suppliers that should or should not be protected donors given the goals of the safe harbor.

2. Data Lock-In and Exchange

In the preceding section, we propose to limit the scope of permissible donors as a means to prevent donations that subvert the intent of the safe harbor—because they are used to lock in referrals—from receiving safe harbor protection. We are also considering inclusion of new or modified conditions in the safe harbor as an alternative or additional means of achieving that result. We are particularly interested in new or modified conditions that will help achieve two related goals. The first goal is to prevent the misuse of the safe harbor in a way that results in data and referral lock-in. The second, related goal is to encourage the free exchange of data (in accordance with protections for privacy). These goals reflect our interest, which we discussed above, in promoting the adoption of interoperable electronic health record technology that benefits patient care while reducing the likelihood that donors will misuse electronic health record technology

[5] *See* 71 FR 45110, 45128 (Aug. 8, 2006).

donations to secure referrals. The 2006 Final Rule requires donated software to be interoperable at the time it is donated to the recipient. The software is deemed interoperable if it is certified as described above. However, it has been suggested that even when donated software meets the interoperability requirements of the rule, policies and practices sometimes affect the true ability of electronic health record technology items and services to be used to exchange information across organizational and vendor boundaries.[6] We seek comments on what new or modified conditions could be added to the electronic health records safe harbor to achieve our two goals and whether those conditions, if any, should be in addition to, or in lieu of, our proposal to limit the scope of permissible donors. For example, 42 CFR 1001.952(y)(3)requires, as a condition of the safe harbor, that ''[t]he donor (or any person on the donor's behalf) [ ] not take any action to limit or restrict the use, compatibility, or interoperability of the items or services with other electronic prescribing or electronic health records systems.'' We solicit comments with regard to whether this condition could be modified to reduce the possibility of lock-in.

3. Covered Technology

We received questions concerning whether certain items or services, for example services that enable the interoperable exchange of electronic health records data, fall within the scope of covered technology under the electronic health records safe harbor. The answer to such questions depends on the exact items or services that are being donated. In the 2006 Final Rule, we explained that we interpreted the term '' 'software, information technology and training services necessary and used predominantly' for electronic health records purposes to include the following, by way of example: [i]nterface and translation software; rights, licenses, and intellectual property related to electronic health records software; connectivity services, including broadband and wireless Internet services; clinical support and information services related to patient care (but not separate research or marketing support services); maintenance services; secure messaging (*e.g.,* permitting physicians to communicate with patients through electronic messaging); and training and support services (such as access to help desk services).'' 71 FR 45110, 45125 (Aug. 8, 2006). It also has been suggested that we modify the regulatory text of the electronic health records safe harbor to explicitly reflect this interpretation. We believe that the current regulatory text, when read in light of the preamble discussion, is sufficiently clear concerning the scope of covered technology, but we seek input from the public regarding this issue.

III. Regulatory Impact Statement

We have examined the impact of this rule as required by Executive Order 12866 on Regulatory Planning and Review (Sept. 30, 1993); Executive Order 13563 on Improving Regulation and Regulatory Review (Jan. 18, 2011); the Regulatory Flexibility Act (RFA) (Sept. 19, 1980, Pub. L. 96–354, codified at 5 U.S.C. 601 et seq.); section 1102(b) of the Act; section 202 of the Unfunded Mandates Reform Act of 1995 (Mar. 22, 1995; Pub. L. 104–4); Executive Order 13132 on Federalism (August 4, 1999); and the Congressional Review Act (5 U.S.C. 804(2)).

Executive Orders 12866 and 13563 direct agencies to assess all costs and benefits of available regulatory alternatives and, if regulation is necessary, to select regulatory approaches that maximize net benefits (including potential economic, environmental, public health and safety effects, distributive impacts, and equity). A regulatory impact analysis (RIA) must be prepared for major rules with economically significant effects ($100 million or more in any 1 year). We believe this proposed rule does not reach the economic threshold for being considered economically significant and thus is not considered a major rule. We solicit comment on the assumptions and findings presented in this initial regulatory impact analysis.

The proposed rule would update the provision under which electronic health records software is deemed interoperable, remove the requirement related to electronic prescribing capability, and extend the safe harbor's sunset date (currently set at December 31, 2013). Neither this proposed rule nor the regulation it amends requires any entity to donate electronic health record technology, but we expect these proposed changes to continue to facilitate the adoption of electronic health record technology by filling a gap rather than creating the primary means by which this technology will be adopted.

The summation of the economic impact analysis regarding the effects of electronic health records in the ambulatory setting that is presented in the 2006 Final Rule still pertains to this proposed regulation. 71 FR 45110 (Aug. 8, 2006). However, since the 2006 Final Rule, several developments have occurred to make us conclude that it is no longer necessary to retain a requirement related to electronic prescribing capability in the electronic health records safe harbor. These developments include: (1) In 2008, Congress passed the Medicare Improvements for Patients and Providers Act of 2008 (MIPPA), Pub. L. 110–275; (2) in 2009, Congress passed the Health Information Technology for Economic and Clinical Health (HITECH) Act, Title XIII of Division A and Title IV of Division B of the American Recovery and Reinvestment Act of 2009 (ARRA), Pub. L. 111–5; and (3) an increase over the past few years in the rate of electronic health record-based electronic prescribing capabilities.

As discussed in more detail earlier in the preamble, section 132 of MIPPA authorized an electronic prescribing incentive program (starting in 2009) for certain types of eligible professionals. The HITECH Act authorizes CMS to establish Medicare and Medicaid electronic health record incentive programs for certain eligible professionals, eligible hospitals, and critical access hospitals. Also, the HITECH Act requires that eligible professionals under the Medicare and Medicaid electronic health record incentive programs demonstrate meaningful use of certified electronic health record technology, including the use of electronic prescribing. Specifically, the final regulation of the Stage 2 meaningful use (77 FR 53968 (Sept. 4, 2012)) includes more demanding requirements for electronic prescribing and identifies electronic prescribing as a required core measure. As a result, beginning in CY 2015 an eligible professional risks a reduction in the Medicare Physician Fee Schedule amount that will otherwise apply for covered professional services if they are not a meaningful EHR user for an EHR reporting period during that year. Our intent remains to allow potential recipients not to receive products or services they already own, but rather to receive electronic health record technology that advances its adoption and use. Lastly, according to ONC, electronic prescribing by physicians using electronic health record technology has increased from 7 percent

[6] For more information on interoperability in health IT, *see* ''EHR Interoperability'' on the HealthIT.gov Web site at *http://www.healthit.gov/providers-professionals/ehr-interoperability*. For further discussion of interoperability and other health IT issues, *see* Arthur L. Kellermann and Spencer S. Jones, *ANALYSIS & COMMENTARY: What It Will Take to Achieve The As-Yet-Unfulfilled Promises Of Health Information Technology,* Health Aff. January 2013 32:163–68.

in December 2008 to approximately 48 percent in June 2012.[7] Furthermore, the regulations recently published to implement Stage 2 of the EHR Incentive Programs continue to encourage physicians' use of electronic prescribing technology. 77 FR 53968, 53989 (Sept. 4, 2012); 77 FR 54163, 54198 (Sept. 4, 2012). Due to data limitations, however, we are unable to accurately estimate the level of impact the electronic health records safe harbor has contributed to the increase in electronic prescribing. Therefore, we believe as a result of these legislative and regulatory developments advancing in parallel, the increase in the adoption of electronic prescribing using electronic health record technology will continue without making it necessary to retain the electronic prescribing capability requirement in the electronic health records safe harbor.

The RFA requires agencies to analyze options for regulatory relief of small entities, if a rule has a significant impact on a substantial number of small entities. For purposes of the RFA, small entities include small businesses, nonprofit organizations, and small governmental jurisdictions. Most hospitals and most other providers and suppliers are small entities, either by nonprofit status or by having revenues of $7.0 million to $34.5 million in any 1 year. Individuals and States are not included in the definition of a small entity. The Secretary has determined that this proposed rule would not have a significant economic impact on a substantial number of small entities.

In addition, section 1102(b) of the Act requires us to prepare a regulatory impact analysis if a rule may have a significant impact on the operations of a substantial number of small rural hospitals. This analysis must conform to section 603 of the RFA. For purposes of section 1102(b) of the Act, we define a small rural hospital as a hospital that is located outside a Metropolitan Statistical Area for Medicare payment regulations and has fewer than 100 beds. The Secretary has determined that this proposed rule would not have a significant impact on the operations of a substantial number of small rural hospitals.

Section 202 of the Unfunded Mandates Reform Act of 1995 also requires that agencies assess anticipated costs and benefits before issuing any rule whose mandates require spending in any 1 year of $100 million in 1995 dollars, updated annually for inflation. In 2013, that threshold is approximately $141 million. This rule will have no consequential effect on State, local, or tribal governments or on the private sector.

Executive Order 13132 establishes certain requirements that an agency must meet when it promulgates a proposed rule (and subsequent final rule) that imposes substantial direct requirement costs on State and local governments, preempts State law, or otherwise has Federalism implications. Since this regulation does not impose any costs on State or local governments, the requirements of Executive Order 13132 are not applicable.

In accordance with Executive Order 12866, this regulation was reviewed by the Office of Management and Budget.

IV. Paperwork Reduction Act

This document does not impose information collection and recordkeeping requirements. Consequently, it need not be reviewed by the Office of Management and Budget under the authority of the Paperwork Reduction Act of 1995.

List of Subjects in 42 CFR Part 1001

Administrative practice and procedure, Fraud, Grant programs—Health, Health facilities, Health professions, Maternal and child health, Medicaid, Medicare, Social Security.

Accordingly, 42 CFR part 1001 is proposed to be amended as set forth below:

PART 1001—[AMENDED]

■ 1. The authority citation for part 1001 continues to read as follows:

Authority: 42 U.S.C. 1302, 1320a–7, 1320a–7b, 1395u(j), 1395u(k), 1395w–104(e)(6), 1395y(d), 1395y(e), 1395cc(b)(2)(D), (E) and (F), and 1395hh; and sec. 2455, Pub. L. 103–355, 108 Stat. 3327 (31 U.S.C. 6101 note).

■ 2. Section 1001.952 is amended by revising the introductory text, paragraph (y) introductory text, and paragraphs (y)(2) and (y)(13), and by removing and reserving paragraph (y)(10).

The revisions read as follows:

§ 1001.952 Exceptions.

The following payment practices shall not be treated as a criminal offense under section 1128B of the Act and shall not serve as the basis for an exclusion:

* * * * *

(y) *Electronic health records items and services.* As used in section 1128B of the Act, ''remuneration'' does not include nonmonetary remuneration (consisting of items and services in the form of software or information technology and training services) necessary and used predominantly to create, maintain, transmit, or receive electronic health records, if all of the following conditions are met:

* * * * *

(2) The software is interoperable at the time it is provided to the recipient. For purposes of this subparagraph, software is deemed to be interoperable if a certifying body authorized by the National Coordinator for Health Information Technology has certified the software to any edition of the electronic health record certification criteria identified in the then-applicable definition of Certified EHR Technology in 45 CFR part 170, on the date it is provided to the recipient.

* * * * *

(13) The transfer of the items and services occurs, and all conditions in this paragraph (y) have been satisfied, on or before December 31, 2016.

* * * * *

Dated: January 22, 2013.

Daniel R. Levinson,

Inspector General.

Approved: March 7, 2013.

Kathleen Sebelius,

Secretary.

[FR Doc. 2013–08314 Filed 4–8–13; 4:15 pm]

BILLING CODE 4152–01–P

[7] State Variation in E-Prescribing Trends in the United States—available at: *http://www.healthit.gov/sites/default/files/us_e-prescribingtrends_onc_brief_4_nov2012.pdf.*

FEDERAL COMMUNICATIONS COMMISSION

47 CFR Part 15

[ET Docket No. 13–49; FCC 13–22]

Unlicensed National Information Infrastructure (U–NII) Devices in the 5 GHz Band

AGENCY: Federal Communications Commission.

ACTION: Proposed rule.

SUMMARY: This document proposes to amend the Commission's rules governing the operation of Unlicensed National Information Infrastructure (U–NII) devices in the 5 GHz band. The Commission has gained much experience with U–NII devices since it first made spectrum available in the 5 GHz band for U–NII in 1997. The Commission believes that the time is now right to revisit the rules. The initiation of this proceeding satisfies the requirements of the ''Middle Class Tax Relief and Job Creation Act of 2012'' which requires the Commission to begin a proceeding to modify the rules to

allow unlicensed U–NII devices to operate in the 5350–5470 MHz band. The Commission believes that an increase in capacity gained from 195 megahertz of additional spectrum, combined with the ease of deployment and operational flexibility provided by its U–NII rules would continue to foster the development of new and innovative unlicensed devices, and increase wireless broadband access and investment.

DATES: Comments must be filed on or before May 28, 2013, and reply comments must be filed on or before June 24, 2013.

FOR FURTHER INFORMATION CONTACT: Aole Wilkins, Office of Engineering and Technology, (202) 418–2406, email: *Aole.Wilkins@fcc.gov,* TTY (202) 418–2989.

ADDRESSES: You may submit comments, identified by ET Docket No. 13–49, by any of the following methods:

■ *Federal Communications Commission's Web site: http://fjallfoss.fcc.gov/ecfs2/.* Follow the instructions for submitting comments.

■ *Mail:* Aole Wilkins, Office of Engineering and Technology, Room 7–A431, Federal Communications Commission, 445 12th SW., Washington, DC 20554.

■ *People with Disabilities:* Contact the FCC to request reasonable accommodations (accessible format documents, sign language interpreters, CART, etc.) by email: *FCC504@fcc.gov* or phone: 202–418–0530 or TTY: 202–418–0432.

For detailed instructions for submitting comments and additional information on the rulemaking process, see the **SUPPLEMENTARY INFORMATION** section of this document.

SUPPLEMENTARY INFORMATION: This is a summary of the Commission's *Notice of Proposed Rule Making,* ET Docket No. 13–49; FCC 13–22, adopted February 20, 2013, and released February 20, 2013. The full text of this document is available for inspection and copying during normal business hours in the FCC Reference Center (Room CY–A257), 445 12th Street SW., Washington, DC 20554. The complete text of this document also may be purchased from the Commission's copy contractor, Best Copy and Printing, Inc., 445 12th Street SW., Room, CY–B402, Washington, DC 20554. The full text may also be downloaded at: *www.fcc.gov.*

Pursuant to §§ 1.415 and 1.419 of the Commission's rules, 47 CFR 1.415, 1.419, interested parties may file comments and reply comments on or before the dates indicated on the first page of this document. Comments may be filed using the Commission's Electronic Comment Filing System (ECFS). *See Electronic Filing of Documents in Rulemaking Proceedings,* 63 FR 24121 (1998).

■ *Electronic Filers:* Comments may be filed electronically using the Internet by accessing the ECFS: *http://fjallfoss.fcc.gov/ecfs2/.*

■ *Paper Filers:* Parties who choose to file by paper must file an original and one copy of each filing. If more than one docket or rulemaking number appears in the caption of this proceeding, filers must submit two additional copies for each additional docket or rulemaking number.

Filings can be sent by hand or messenger delivery, by commercial overnight courier, or by first-class or overnight U.S. Postal Service mail. All filings must be addressed to the Commission's Secretary, Office of the Secretary, Federal Communications Commission.

■ All hand-delivered or messenger-delivered paper filings for the Commission's Secretary must be delivered to FCC Headquarters at 445 12th St. SW., Room TW–A325, Washington, DC 20554. The filing hours are 8:00 a.m. to 7:00 p.m. All hand deliveries must be held together with rubber bands or fasteners. Any envelopes and boxes must be disposed of *before* entering the building.

■ Commercial overnight mail (other than U.S. Postal Service Express Mail and Priority Mail) must be sent to 9300 East Hampton Drive, Capitol Heights, MD 20743.

■ U.S. Postal Service first-class, Express, and Priority mail must be addressed to 445 12th Street SW., Washington DC 20554.

People with Disabilities: To request materials in accessible formats for people with disabilities (braille, large print, electronic files, audio format), send an email to *fcc504@fcc.gov* or call the Consumer & Governmental Affairs Bureau at 202–418–0530 (voice), 202–418–0432 (tty).

Summary of Notice of Proposed Rulemaking

1. By the Notice of Proposed Rulemaking (NPRM), the Commission proposes to amend part 15 of its rules governing the operation of Unlicensed National Information Infrastructure (U–NII) devices in the 5 GHz band. U–NII devices are unlicensed intentional radiators that operate in the frequency bands 5.15–5.35 GHz and 5.47–5.825 GHz, and which use wideband digital modulation techniques to provide a wide array of high data rate mobile and fixed communications for individuals, businesses, and institutions. Since the Commission first made available spectrum in the 5 GHz band for U–NII in 1997, it has gained much experience with these devices. The Commission believes that the time is now right to revisit the part 15 rules, and, in the *NPRM,* proposes to modify certain technical requirements for U–NII devices to ensure that these devices do not cause harmful interference and thus can continue to operate in the 5 GHz band and make broadband technologies available for consumers and businesses.

2. The Commission also seeks comment on making available an additional 195 megahertz of spectrum in the 5.35–5.47 GHz and 5.85–5.925 GHz bands for U–NII use. This could increase the spectrum available to unlicensed devices in the 5 GHz band by approximately 35 percent and would represent a significant increase in the spectrum available for unlicensed devices across the overall radio spectrum. The initiation of this proceeding satisfies the requirements of section 6406 (a) of the ''Middle Class Tax Relief and Job Creation Act of 2012'' which requires the Commission to begin a proceeding to modify part 15 of title 47, Code of Federal Regulations, to allow unlicensed U–NII devices to operate in the 5350–5470 MHz band. The Commission believes that an increase in capacity gained from 195 megahertz of additional spectrum, combined with the ease of deployment and operational flexibility provided by its U–NII rules would continue to foster the development of new and innovative unlicensed devices, and increase wireless broadband access and investment.

Background

3. Part 15 of the Commission's rules permits the operation of radio frequency devices without issuing individual licenses to operators of these devices. The Commission's part 15 rules are designed to ensure that there is a low probability that these devices will cause harmful interference to other users of the same or adjacent spectrum. Typically, unlicensed devices operate at very low power over relatively short distances, and often employ various techniques, such as dynamic spectrum access or listen-before-talk protocols, to reduce the interference risk to others as well as themselves. The primary operating condition for unlicensed devices is that the operator must accept whatever interference is received and must correct whatever interference it causes. Should harmful interference occur, the operator is required to

immediately correct the interference problem or cease operation.

4. In 1997, the Commission made available 300 megahertz of spectrum at 5.15–5.25 GHz (referred to hereinafter as U–NII–1), 5.25–5.35 GHz (referred to hereinafter as U–NII–2A), and 5.725–5.825 GHz (referred to hereinafter as U–NII–3) for use by a new category of unlicensed equipment, called U–NII devices which are regulated under part 15, Subpart E of the Commission's rules. In 2003, the Commission made an additional 255 megahertz of spectrum available in the 5.47–5.725 GHz (referred to hereinafter as U–NII–2C) for U–NII devices. These actions align the frequency bands used by U–NII devices in the United States with the frequency bands used by U–NII devices in other parts of the world, thus decreasing development and manufacturing costs by allowing for the same products to be used in most parts of the world.

5. The U–NII–1 band is allocated on a primary basis to the Aeronautical Radionavigation Service for both Federal and non-Federal operations and on a primary basis for Fixed Satellite Service (Earth-to–space) for non-Federal operations. The U–NII–2A band is allocated on a primary basis to the Earth Exploration Satellite (active), Radiolocation, and Space Research (active) Services for Federal operation, and for non-Federal operation on a secondary basis.

6. The U–NII–2C band is allocated on a primary basis to the Radiolocation Service for Federal operation. The sub-band at 5.47–5.65 GHz band is allocated on a primary basis to the Radiolocation Service for non-Federal operation, and on a primary basis to the Maritime Radionavigation Service for both Federal and non-Federal operations. The 5.47–5.570 GHz band segment is allocated on a primary basis to the Earth Exploration-Satellite (active) and Space Research (active) Services for Federal operation and on the secondary basis for non-Federal operation. The 5.6–5.65 GHz band segment is allocated on a primary basis to the Meteorological Aids Service for both Federal and non-Federal operations. The band segment at 5.65–5.725 GHz is allocated on a secondary basis to the Amateur Radio Service for non-Federal operation.

7. The U–NII–3 band is allocated on a primary basis to the Radiolocation Service for Federal operation, and is allocated on a secondary basis to the Amateur Radio Service for non-Federal operation.

8. In early 2009, Federal Aviation Administration (FAA) reported interference to their Terminal Doppler Weather Radar (TDWR) that operates within the 5.60–5.65 GHz band. Early field studies performed by the National Telecommunications and Information Administration's (NTIA's) Institute for Telecommunications Sciences (ITS) and FAA staff indicated the interference sources were unlicensed U–NII devices that incorporated dynamic frequency selection (DFS), from different manufacturers, and operated in the same frequency band as these Federal radar systems.

9. The Commission brought together all of the principal parties including NTIA, FAA, industry participants and the FCC's Enforcement Bureau and Office of Engineering and Technology to analyze the interference situation. Based on these investigations, the Commission has taken actions to mitigate the interference situation, including issuing enforcement advisories to heighten users' awareness of TDWR interference issues, and the Office of Engineering and Technology has placed conditions on U–NII device certifications to curtail the interference risk. The Commission also has sent enforcement teams to work with FAA staff in the field, and has taken enforcement actions against operators of U–NII devices that caused interference to TDWR installations including issuing Letters of Inquiry and Notices of Apparent Liability for Forfeitures to operators found to be causing interference. Most of these interference cases were caused by devices not certified for operation in the U–NII–2C band, which includes the 5.6–5.65 GHz band used by the TDWRs. Instead, these devices had been certified for operation in the U–NII–3 band, either as U–NII devices under § 15.407 of the Commission's rules or as digitally modulated intentional radiators under § 15.247 of the Commission's rules, and which were operating at high power levels in elevated locations. The Commission's investigations found that most U–NII devices are manufactured to enable operation across a wide range of frequencies, extending down into the 4–GHz bands and up to almost 6 GHz. In many cases, the interference was caused by third parties modifying software configurations to enable operation in frequency bands other than those for which the device had been certified but without meeting the technical requirements for operation in those frequency bands. There was also an issue with devices that employed frame based architectures that allowed operators to reconfigure the talk/listen ratio of their devices.

10. In recent years, there has been an industry wide push to increase the amount of spectrum available for unlicensed use. In June 2010, the President issued an Executive Memorandum that encouraged the Commission to work closely with the Department of Commerce, through NTIA, to make available a total of 500 megahertz for commercial mobile and fixed wireless broadband use by the year 2020. The FCC's 2010 National Broadband Plan recommended that the Commission make available 500 megahertz of new spectrum for wireless broadband within 10 years. In analyzing the need for broadband spectrum, the Commission also concluded that nearly 300 megahertz of spectrum is needed by 2014, and that making available additional spectrum for mobile broadband would create value in excess of $100 billion through avoidance of unnecessary costs.

11. In addition, Congress has enacted legislation that addresses unlicensed use of the 5 GHz band. The Spectrum Act requires the Commission to begin a proceeding to modify part 15 title 47, Code of Federal Regulations (CFR), to allow unlicensed U–NII devices to operate in the 5.35–5.47 GHz band (referred to hereinafter as U–NII–2B) no later than 1 year after the date of the enactment of the Act if, in consultation with the Assistant Secretary of Commerce (i.e., the NTIA Administrator), it determines that licensees will be protected by technical solutions and that the primary mission of Federal spectrum users in the band will not be compromised by the introduction of unlicensed devices in this band.

12. The Spectrum Act also requires NTIA, in consultation with the Department of Defense and other impacted agencies, to conduct a study evaluating known and proposed spectrum sharing technologies and the risks to Federal users if unlicensed U–NII devices were allowed to operate in the U–NII–2B band as well as in the 5.85–5.925 GHz band (referred to hereinafter as U–NII–4). NTIA was required to publish a report on the U–NII–2B band no later than 8 months after the date of enactment of the Spectrum Act and a report on the 5.85–5.925 GHz band (referred to hereinafter as U–NII–4) no later than 18 months after the date of enactment of the Spectrum Act. NTIA published a report (hereinafter referred to as ''NTIA 5 GHz Report'') on both the U–NII–2B and U–NII–4 bands on January 25, 2013.

Notice of Proposed Rulemaking

13. In the NPRM, the Commission took the first steps towards ensuring the U–NII bands continue to meet the demand for broadband spectrum, while ensuring protection of authorized

operations, by proposing modifications to the part 15 rules. In particular, the Commission is proposing to align the provisions for operation of digitally modulated devices in the 5.725–5.85 GHz band, now permitted under § 15.247 of its rules, with the rules for the U–NII–3 band under § 15.407. This will expand the U–NII–3 band by 25 megahertz and provide consistent rules across 125 megahertz of spectrum. The Commission also seeks comment on aligning the power limits and permissible location for operations in the U–NII–1 and U–NII–2A bands to permit the introduction of a new generation of wireless devices in 200 megahertz of contiguous spectrum.

14. The Commission also addresses ways to ensure compliance with its rules across all of the U–NII bands and, in particular, the U–NII–2A and U–NII–2C bands to curtail interference to incumbent Federal operations (e.g. TDWR installations). The Commission seeks comment on various ways to prevent unlawful modification and operation of unlicensed devices in the U–NII bands as well as compliance issues that are likely to arise as the Commission moves toward wider bandwidth systems operating across multiple U–NII bands. Although some of the methods discussed would ensure that manufacturers and users comply with the Commission's requirements across any of the U–NII band segments, the Commission also seeks comment on some techniques that may be useful mainly in curtailing interference to incumbent Federal operations, such as Terminal Doppler Weather radar (TDWR) installations, in the U–NII–2A and U–NII–2C bands, such as geo-location and database registration, unwanted emissions limits, and guard band requirements. The Commission also seeks comment on several issues specific to the U–NII–2A and U-NII–2C bands regarding DFS functionality, the sensing threshold for co-channel operation, and revised DFS measurement procedures. The Commission asks that commenters address the benefits of adopting any of the proposals in the NPRM as well as the costs to do so, and that they weigh and compare the benefits and costs in each case. This assessment should address which costs should be borne by U–NII device manufacturers, U–NII device operators or other third parties, as appropriate.

15. In the *NPRM,* the Commission also seeks comment on modifying part 15 Subpart E of the Commission's rules governing the operation of U–NII devices to make available an additional 195 megahertz of spectrum in the 5.350–5.470 GHz (U–NII–2B) and 5.850–5.925 GHz (U–NII–4) bands. This would increase the spectrum available to unlicensed devices in the 5 GHz band by nearly 35 percent and would represent a significant increase in spectrum available for unlicensed operations. Finally, The Commission seeks comment on transition periods for requiring compliance with any modified rules that the Commission ultimately adopts in this proceeding.

A. The Current U–NII Bands

1. Unlicensed Operations in the U–NII–3 Band

16. The Commission believes that now is an appropriate time to review its rules to eliminate the disparity and decrease the complexity associated with interpreting its rules for digitally modulated devices operating in the U–NII–3 band under § 15.407 and in the 5.725–5.85 GHz band under § 15.247 The Commission believes the changes proposed will ensure compliance with requirements designed to protect authorized services in the U–NII bands, simplify the Commission's authorization procedures, and reduce certification cost for manufacturers of these devices. The spectrum ecosystem has changed considerably since the Commission allowed the certification of ''digitally modulated'' devices. For example, the standards for wireless broadband devices are now capable of producing data rates in excess of 1 Gbits/s. In addition, devices are now able to utilize advances in antenna technology that allow the multiple data streams to be transmitted over multiple antennas. This provides an opportunity for the Commission to reflect on recent industry developments and propose new rules that have the potential to increase consistency in the process of certifying 5 GHz wireless broadband devices, while continuing to protect authorized services.

17. The Commission is proposing two changes that will eliminate the disparity in its rules for 5.7 GHz digitally modulated devices. First, the Commission proposes to extend the upper edge of the U–NII–3 band from 5.825 GHz to 5.85 GHz to match the amount of spectrum available for digitally modulated devices under § 15.247. The Commission believes that this change would eliminate the complexity and costs associated with multiple rule part certifications for these devices which are technically similar. Adopting this proposal would not increase the potential for harmful interference because this 25 megahertz segment is already available for devices certified under § 15.247. The Commission seeks comment on the potential benefits of expanding the U–NII–3 band to include an additional 25 megahertz of spectrum at the upper band edge. The Commission invites comment on whether there are cost advantages of this proposal. The Commission asks that commenter's assessment of adopting the proposal weigh and compare the benefits and costs to do so. This assessment should address which costs should be borne by U–NII device manufacturers, U–NII device operators or other third parties, as appropriate.

18. Second, the Commission proposes to consolidate all equipment authorizations for digitally modulated devices in the 5.725–5.85 GHz band under the U–NII rules, while maintaining many of the technical rules that currently make equipment authorization under § 15.247 more attractive for equipment manufacturers. The Commission also proposes to remove the 5.725–5.85 GHz band for digital modulation devices from § 15.247. By doing this, the Commission will ensure that all digitally modulated equipment, which is technically similar, operates under a single rule part using identical technical rules. The Commission proposes to modify § 15.407 for digitally modulated devices and it seeks comment on all of these proposed rule changes. The Commission invites comment on the benefits of adopting any of the proposed rule changes below as well as the costs to do so. The Commission asks that commenter's assessment of adopting the proposals weigh and compare the benefits and costs to do so. This assessment should address which costs should be borne by U–NII device manufacturers, U–NII device operators or other third parties, as appropriate.

19. *Frequency Band.* Section 15.247 allows operation throughout the 5.725–5.85 GHz band, while § 15.407 allows operation only in the 5.725–5.825 GHz band. The extra 25 megahertz of spectrum that is allowed under § 15.247 provides incentive for device manufacturers to certify devices under that rule rather than under § 15.407. The Commission proposes to expand the frequency band of operation in § 15.407 to include the 5.825–5.85 GHz band. This will allow U–NII–3 devices to operate across the full range of spectrum that can currently be accessed by digitally modulated devices under § 15.247.

20. *Power.* Section 15.247 allows 1 Watt of total peak conducted power (alternate measurement procedures are permitted), whereas § 15.407 limits

maximum conducted output power to the lesser of 1 Watt or 17 dBm + 10 log B (in MHz, alternate measurement procedure in § 15.247 is required). In addition to the 1 watt power limit, there is a separate power spectral density (PSD) limit in both §§ 15.247 and 15.407 such that 1 Watt of total power is available only when the 6-dB bandwidth is 500 kilohertz or more under § 15.247 and when the 26-dB bandwidth is 20 megahertz or more under § 15.407. Because the Commission is trying to accommodate digitally modulated devices that are currently permitted under both rules, the Commission proposes to remove the bandwidth dependent term (i.e., remove 17 + 10 log B) from § 15.407 so that the power limit will be 1 Watt. The Commission does not believe removing the variable power limit in § 15.407 would increase any potential for interference, because under current rules manufacturers are able to certify equipment that uses up to 1 Watt of power under § 15.247.

21. *Power Spectral Density.* Section 15.247 requires a maximum PSD of 8 dBm/3 kHz (33 dBm/MHz), whereas § 15.407 requires a maximum PSD of 17 dBm/MHz. The only difference between these two PSD limits is the bandwidth at which the 1 Watt total power, rather than the PSD, becomes the limiting factor. Specifically, § 15.247 allows a higher PSD when the device emission bandwidth is between 0.5 to 20 megahertz. Above 20 megahertz emission bandwidth, the 1 Watt power limit becomes the limiting parameter, and PSD is the same for both §§ 15.247 and 15.407. The Commission proposes to modify § 15.407 to require the PSD limit used in § 15.247 (i.e., 8 dBm/3 kHz (33 dBm/MHz)), so that digitally modulated devices designed to meet this limit will continue to comply with the new PSD requirement in § 15.407. This will ease the transition of all digitally modulated devices in the 5.725–5.85 GHz band to authorization and compliance under § 15.407. The only change for digitally modulated devices will occur when emission bandwidth is between 500 kilohertz and 20 megahertz. High-bandwidth devices like those typically used in U–NII applications will still be limited by 1 Watt total power, and thus the proposed change in PSD limits would not increase the risk of any potential interference. However, the Commission does realize that limiting the PSD to 8 dBm/kHz (33 dBm/MHz) would result in a PSD that is higher than the total power limit of 1 watt (30dBm). In addition, the Commission realizes that requiring devices that employ wider bandwidths to utilize a measurement bandwidth of 3 kHz may unnecessarily increase the time that it takes to complete measurement tests. The Commission seeks comment on whether it should increase the measurement bandwidth to 1 megahertz to reduce the complexity in measurement tests. The Commission notes that changing the measurement bandwidth would promote consistency within the U–NII rules. Should the Commission consider implementing a different PSD limit and measure this limit across differing bandwidths, e.g. 500 kHz or 100 kHz measurement bandwidths?

22. *Emission Bandwidth.* Section 15.247 requires a minimum 6-dB bandwidth of 500 kilohertz. No minimum or maximum bandwidth is required under § 15.407, but the emission bandwidth is defined and measured as the 26-dB down points of the U–NII signal and is used to determine the total power allowed under that rule. Because the Commission is proposing to eliminate the bandwidth-dependent limit on total power, the Commission proposes to modify § 15.407 to eliminate the 26-dB bandwidth requirement and to add the minimum 6-dB bandwidth requirement from § 15.247.

23. *Antenna Gain.* Under § 15.247, the assumed antenna gain is 6 dBi, with a 1 dB reduction in power required for every 1 dB that the antenna gain exceeds 6 dBi. For fixed point-to-point systems, no power reduction is required. Section 15.407 assumes the same antenna gain of 6 dBi, with 1 dB reduction in power required for every 1 dB that gain exceeds 6 dBi. For fixed point-to-point systems, a 1 dB reduction in power is required for every 1 dB that gain exceeds 23 dBi. The only difference between the two rule parts is the maximum antenna gain that can be deployed without a penalty in transmitter power. The Commission proposes to apply the more stringent 23 dBi maximum antenna gain that is currently required under § 15.407. The Commission believes that using the more stringent antenna gain requirement will ensure that there is no increase in the potential for interference from unlicensed devices operating under the new combined rule parts.

24. *Unwanted Emissions.* Section 15.247(d) requires 20 dB of attenuation (30 dB if the alternate measurement procedure detailed in § 15.247(b)(3) is used). In restricted bands, emissions must meet the § 15.209 general emission limits. Section 15.407 requires unwanted emissions to be below −17 dBm/MHz within 10 megahertz of the band edge, and below −27 dBm/MHz beyond 10 megahertz of the band edge. Also, all emissions below 1 GHz must comply with the § 15.209 general emission limits. The unwanted emission limits in § 15.407 are somewhat more restrictive than those in § 15.247. Because unwanted emission can be reduced without affecting the utility of the device, and because using the more stringent unwanted emissions requirement will ensure that there is no increase in the potential for interference from unlicensed devices operating under the new combined rule parts, the Commission is proposing that the more restrictive limits in § 15.407 be required for digitally modulated devices.

25. *Peak to Average Ratio.* Section 15.407 contains a requirement to maintain a peak-to-average ratio of no more than 13 dB across any 1 megahertz band, whereas § 15.247 does not contain any peak-to-average ratio requirement. The Commission believes that using the more stringent peak-to-average requirement will ensure that there is no increase in the potential for interference from unlicensed devices operating under the new combined rule parts, thus the Commission is proposing to keep the peak-to-average ratio requirement that is currently in § 15.407.

2. Unlicensed Operations in the U–NII–1 Band

26. The Commission adopted technical rules for the U–NII–1 band in 1997 that it believed would provide sufficient flexibility for the introduction of a variety of short-range communication devices within localized indoor settings. Although that vision was reasonable at the time, the Commission finds that today—over 15 years since those rules were adopted—the wireless device market has changed dramatically and the assumptions made in 1997 may not be valid for today's market. Unlicensed communication links are included in a wide variety of devices which are increasingly mobile or portable in nature, not easily limited to indoor locations, and often needing more power to link with other networks at farther locations.

27. At the same time, the Commission must protect incumbent authorized services, both Federal and non-Federal. A global network of satellite systems in non-geostationary satellite orbit (NGSO) in the mobile satellite service (MSS) operates feeder links in the U–NII–1 band. These NGSO/MSS feeder links require co-channel interference protection. The Commission also needs to consider the potential for interference to services in the bands immediately

adjacent to the U–NII–1 band. Microwave landing systems operate below 5.15 GHz, and the Commission has proposed to add an allocation for Aeronautical Mobile Telemetry at 5.091–5.15 GHz.

28. The Commission seeks comment on whether the rules for the U–NII–1 band should be modified to harmonize with the rules for the U–NII–2A band in three areas. Specifically, the Commission seeks comment on whether it should increase the power limits to those applicable in the U–NII–2A band, i.e., 250 mW with a maximum EIRP of 30 dBm with 6 dBi antenna gain. The Commission also invites comment on whether the rules for the U–NII–1 band should be modified to increase the PSD limits to those applicable in the U–NII–2A band, i.e., 11 dBm/MHz. Finally, the Commission seeks comment on whether the rules for the U–NII–1 band should be modified to eliminate the restriction on outdoor operation, and, if the Commission were to do so, whether it should allow outdoor operation only under the current power and PSD limits for the band or under the limits now permitted only in the U–NII–2 bands. The Commission believes that these changes would permit a new generation of wireless devices to be developed in the U–NII bands, particularly if industry develops wider bandwidth devices that would operate across multiple U–NII band segments. Harmonizing the power and use conditions across the lower 200 megahertz of U–NII spectrum would likely permit the introduction of a wide-range of new broadband products capable of operating at higher data rates than is now possible. The Commission seeks comment on these assumptions, and on the potential impacts to incumbent services, including any suggestions for mitigating interference.

29. The Commission also seek comment on whether the rules for the U–NII–1 band should be modified to harmonize with the rules for the U–NII–3 band to: (a) increase the power limits to 1 W with a maximum EIRP of 36 dBm with 6 dBi antenna gain; (b) increase the PSD limits to 17 dBm; and (c) limit out-of-band emissions to an EIRP of −27 dBm/MHz and (d) eliminate the restriction on outdoor operation. The Commission believes that these changes would permit for wider bandwidth devices that would not rely on contiguous spectrum under new Wi-Fi standards, and would permit the introduction of more outdoor access points for broadband use. The Commission seeks comment on these assumptions, and on the potential impacts to incumbent services, including any suggestions for mitigating interference.

30. The Commission invites comment on the benefits of adopting either of these approaches as well as the costs of doing so. The Commission asks that commenter's assessment of adopting either approach weigh and compare the benefits and costs to do so. This assessment should address which costs should be borne by U–NII device manufacturers, U–NII device operators or other third parties, as appropriate.

3. Ensuring Compliance With the Rules for the U–NII Bands

31. The Commission's Enforcement Bureau working cooperatively with the FAA has been successful in finding and resolving a large number of interference cases. In some cases, equipment that met the Commission's certification standards nonetheless caused interference, due to a variety of factors such as the configuration of the transmitter, its height and azimuth relative to the TDWR, and the device's failure to detect and avoid the radar signal. In many cases, however, the Commission staff found that the interfering devices were not certified or otherwise were not compliant with the Commission's rules. For example, the Commission found that devices that were certified as digital devices under § 15.247 for operation in the 5.725–5.850 GHz band had been unlawfully modified to transmit in the U–NII–2C band without demonstrating compliance with the DFS and TPC requirements for those bands. Typically, these modifications are made by operators of the devices, but manufacturers have produced equipment that is easily modified, especially through software changes, to permit devices to operate in non-compliant modes. The Enforcement Bureau is continuing to take action against companies for operating devices that cause interference to the TDWRs. The Commission notes that, while the TDWRs have been the focus of Commission investigations, DFS was designed to protect all incumbent radar operations and modification of devices as described poses a risk of interference to more than just TDWRs.

32. Interference studies conducted by NTIA and the FAA indicate that there may be some potential for interference from U–NII devices operating in frequencies occupied by or adjacent to radar systems. In its Third Technical Report regarding the interference into the TDWRs, NTIA explores frequency separations, distance separations, and maximum U–NII emissions limits needed to preclude harmful interference into the TDWR. The report analyzes the distances at which U–NII transmissions can be expected to routinely interfere with TDWR receivers. U–NII devices on rooftops, towers, and other high points that are 153 m to 305 m (500 to 1000 ft.) above ground level, as NTIA observed in San Juan, PR, will interfere with a TDWR mainbeam at distances within 25 km to 41 km (16 mi to 25 mi), respectively, of a TDWR station. The report also specifies frequency separations necessary to protect TDWR from interference due to unwanted emissions from U–NII devices.

33. As a result of its ongoing discussions with NTIA, FAA and industry representatives, as well as the results of investigations conducted by the Commission, NTIA and FAA, and, the Office of Engineering and Technology has provided applicants for certification a representative way for demonstrating that their U–NII devices should not cause harmful interference to TDWR installations operating in the U–NII–2C band and accordingly can be authorized for manufacture and use. Specifically, OET has advised applicants that it will approve such devices upon assurance by the applicant that: (a) U–NII devices may not operate co-frequency with TDWR operations at 5.6–5.65 GHz; (b) grantee will provide owners, operators and installers of these devices with instructions that a master or client device within 35 km of a TDWR location must be separated by at least 30 megahertz (center-to-center) from the TDWR operating frequency and procedures for registering the devices in an industry-sponsored database; (c) the device does not include configuration controls to change the frequency of operation to any frequency other than those specified in the grant of certification; and (d) the device's software configurations do not allow for ad hoc networking, country code selection, or other mode of operation that would disable the DFS functionality of the U–NII device.

34. The interference cases the Commission has seen to date raise serious concerns with ensuring compliance with the Commission's rules in the U–NII-2C band, but there are other circumstances that also make this an opportune time for the Commission to consider compliance issues across the 5 GHz U–NII bands. For example, unlicensed wireless broadband device manufactures are now designing devices employing wider bandwidths (e.g., IEEE 802.11ac standard currently in development) using transmitters that are capable of operating across two or more U–NII bands. When devices are designed to operate across multiple frequency

bands, the Commission's rules require that applicants demonstrate compliance with the rules for each of the individual frequency bands in which they intend to operate in order to be certified for operation in each band.

35. The Commission expects that more and more devices with even wider bandwidths will continue to be introduced in the 5 GHz band in the not too distant future as a result of new technical standards. The introduction of wider bandwidths under the IEEE 802.11ac standard presents complex issues for emissions testing to demonstrate compliance with the various requirements in the different U–NII bands. The Office of Engineering and Technology has published two guidance documents addressing these issues for testing of devices designed under this new standard as well as ''pre-ac'' devices, taking into account the current rules that permit authorization of digitally modulated devices under both §§ 15.407 and 15.247.

36. The Commission, NTIA, and the FAA have been working with manufacturers of U–NII devices and the WISPA to fully understand the causes of interference to TDWR systems and to identify ways to mitigate and significantly reduce the likelihood of interference. The Commission believes the rules proposed herein, in addition to continuing enforcement efforts, will enable us to achieve this goal while allowing U–NII devices to continue to operate successfully in the 5 GHz band.

37. Wireless networking devices that operate within the 5 GHz band typically have similar operational parameters, so that a device certified for operation in any one of the 5 GHz frequency bands, whether a U–NII band or not, can be easily tuned to another frequency band in the same spectrum range through software modifications. The Commission's experience with these devices shows that some of these devices are designed so that end-users can modify them to operate in bands for which they are not certified and thus do not meet the specific requirements intended to protect sensitive incumbent services. For example, in some recent interference cases investigated by the Commission's Enforcement Bureau, operators of devices certified under § 15.247 were tuned down into the U–NII–2C frequency band and operated with a higher gain antenna than what is permitted by the Commission's U–NII rules. The modification of devices in this manner resulted in both in-band and out-of-band emissions that were far in excess of what § 15.407 allows in the U–NII–2C band. Such unlawful modification and operation of these devices could considerably increase the distance at which these non-compliant devices cause harmful interference to incumbent services. The Commission believes that its proposals, discussed to authorize all digitally modulated devices under identical rules in a modified § 15.407 will allow the Commission to more effectively and efficiently address interference risk to incumbent operations in the U–NII–2C and U–NII–3 bands.

38. The Commission believes that it should consider additional steps to further reduce the likelihood of interference not only to TDWR systems but to all other incumbent services in the 5 GHz bands as more composite and wideband devices are introduced across the 5 GHz band. The Commission recognizes that one of the difficulties in ensuring compliance with its current rules comes from the fact that these devices can easily be re-configured by operators modifying the software that controls the device's operational parameters, such as frequency band. This makes it difficult for the Commission not only to ensure compliance with its rules but also to enforce those rules.

39. Because the current and future use of the 5 GHz bands is heavily reliant on the successful implementation of the Commission's technical rules, the Commission proposes to require that manufacturers implement security features in any digitally modulated device capable of operating in the U–NII bands, so that third parties are not able to reprogram the devices to operate outside the parameters for which the device was certified. The Commission proposes and seeks comment on adopting this safeguard regardless of whether or how it modifies § 15.247 or § 15.407. The Commission is particularly concerned that U–NII devices—which are not certified under the rules as software defined radios (SDRs) and thus may lack safeguards that are required for certified SDRs—may nevertheless be susceptible to manipulation by third parties who can modify the operating parameters of country code, frequency range, modulation type, maximum output power or the circumstances under which the transmitter has been approved. Specifically, the Commission seeks comment on whether it should require manufacturers to make it difficult for third parties to reprogram the embedded transmitter chip in certified devices. For example, should the Commission require that manufacturers ensure that modifying or reconfiguring firmware or software will make a device inoperable in certain bands? The Commission also seeks comment on whether it should require U–NII devices to transmit identifying information so that, in the event interference to authorized users occurs, the Commission can identify the source of interference and its location. What type of information should be transmitted and in what format?

40. Although the Commission believes that requiring manufacturers to secure the software in their radios to prevent modifications by third parties provides a clear public benefit in ensuring that these devices comply with the rules as more devices are introduced and the number of users increases, the Commission recognizes that this requirement will add some cost to these devices. The Commission seeks comment on the proposals discussed, particularly information on the costs to manufacturers for implementing them. The Commission invites comment on the benefits of adopting these proposals as well as the costs to do so. The Commission asks that commenter's assessment of adopting the proposals weigh and compare the benefits and costs to do so. This assessment should address which costs should be borne by U–NII device manufacturers, U–NII device operators or other third parties, as appropriate.

41. The Commission believes that its proposals to modify the technical rules in the U–NII–3 band, along with its proposal to enhance the security requirements of all U–NII devices, would have prevented most of the interference cases that the Commission has observed to date. The Commission also notes, however, that the NTIA Third Technical Report and its own discussions with NTIA, FAA and industry representatives have identified additional techniques that could mitigate in-band and adjacent band interference to incumbents. These include using a database registration process combined with geo-location technology to determine whether there is any potential interference to radar systems such as the TDWR; limiting the unwanted emission levels of the U–NII devices; or increasing the sensing frequency range (e.g., detection bandwidth) of U–NII devices operating in the U–NII–2A and U–NII–2C bands. These other techniques, could supplement or replace the assurances (described in paragraph 45 of the NPRM) that OET has accepted from certification applicants on an ad-hoc basis as sufficient to address interference concerns that might otherwise warrant denial of equipment certification requests for U–NII devices in the U–NII–2C band. The Commission

also observes that these techniques would place responsibility on users, rather than on manufacturers, for mitigating interference. The Commission invites comment on whether the security requirements it is proposing to place on U–NII devices, along with the more stringent unwanted emission limits that it is proposing for devices that would previously have been certified under § 15.247, are sufficient to protect incumbent radar operations, including TDWR installations, from interference, or whether the Commission should further modify its rules to require implementation of other techniques. In particular, the Commission seeks comment on the likely effectiveness of each technique discussed in reducing the incidence of interference to TDWR systems or other incumbent operations by ensuring compliance with and in facilitating enforcement of its rules. The Commission invites comment on whether any of these techniques would be beneficial in protecting other incumbents from interference, not only in the U–NII–2C band but also in other segments of the 5 GHz band. The Commission invites comment on the benefits of adopting any of the methods discussed as well as the costs to do so. The Commission asks that commenters' assessment of adopting any of the methods weigh and compare the benefits and costs to do so. This assessment should address which costs should be borne by U–NII device manufacturers, U–NII device operators or other third parties, as appropriate.

42. *Geo-Location/Database:* The NTIA Third Technical Report specifies the frequency separations and distance separations needed to preclude interference from U–NII devices into the TDWR under the study conditions used for NTIA's investigation. The separation requirements differ for the various types of devices, but, in general, as the frequency separation increases the required separation distance between the U–NII devices and the TDWR decreases. For example, with main-beam coupling and ±30 megahertz of frequency separation from 20 megahertz-wide 802.11-based U–NII devices operating at an EIRP of 17 dBm, a TDWR needs a protection distance of 11 km. For 40 megahertz-wide 802.11 devices with a frequency separation of ±30 megahertz, the distance is 35 km; that distance is reduced to 15 km at a frequency separation of 50 megahertz above the center frequency and 10 km below the center frequency with a 50 megahertz frequency separation. As noted, the Office of Engineering and Technology has implemented these geographic and frequency separations as part of its equipment authorization program. Industry representatives have recommended to Commission staff that the Commission should implement these protections for high power point-to-point systems, and have argued that no additional limits or requirements are necessary for lower power, indoor systems. The Commission seeks comment on whether it should require these geographic and frequency separations from TDWR and other Federal radars operating in the U–NII–2C band for high power outdoor U–NII devices authorized for operation in this band. How should the Commission define and distinguish outdoor versus indoor U–NII devices, or high power versus low power U–NII devices? How would the Commission enforce compliance with these distinctions?

43. One way to implement frequency and distance separation requirements is to require geo-location and database registration. Because the TDWR locations are known and somewhat limited in number, implementation of geo-location and database registration might be very straightforward and easy to accomplish. With this interference avoidance method, the location of an unlicensed device could be determined by a professional installer or by using geo-location technology such as GPS incorporated within the device. Using either of these methods, a user could determine from either an internal or external database whether the unlicensed device is located far enough from the TDWR to avoid causing harmful interference; if not, it could transmit on a frequency farther away from the TDWR's center frequency. CSMAC, for example, recommends implementing a Dynamic Database approach to device authorization. On a going-forward basis, devices and systems sharing a band would be ''connected'' devices and a geo-location/database approach could enforce permission and terms-of-use updates on an automated basis. The concept of database-enabled cognitive radios can lend itself to many applications, including ultimately sharing spectrum with Federal users. As noted, a voluntary database has been implemented by WISPA, which disseminates the location of TDWR to WISPs and encourages operators that install devices within 35 km or the line-of-sight of a TDWR, to operate at least 30 megahertz away from the TDWR operation frequencies. WISPA has also agreed to voluntarily provide a database where WISPs can register the locations of the outdoor transmitters that they use. The Commission seeks comment on whether, given the limited number of TDWR locations, a geo-location/database approach could be effectively implemented and maintained for numerous U–NII devices that would operate in the 5.6–5.65 GHz band. How will this approach protect other incumbent operations?

44. The Commission recognizes that its rules already require radar avoidance via the DFS mechanism. The Commission further recognizes that requiring the implementation of a database for TDWR could increase the complexity of U–NII devices if the Commission were to require that they include a geo-location capability. Alternatively, the Commission could modify its rules to specifically require professional installation and permit manufacturers to pass on this cost to the user of the device. In addition, a database for registering TDWR locations and, perhaps, U–NII device users and locations as well would entail some cost to establish and maintain. The Commission seeks comment on what the cost would be to implement geo-location/database protection, what the requirements should be, and how to define ''professional installation.'' The Commission also seeks comment on whether requiring the implementation of both DFS and geo-location interference protection mechanisms would be overly burdensome for equipment manufacturers and whether it is necessary to require both. Are there alternative approaches that can be implemented to protect the incumbent radar systems? Because higher power outdoor devices (such as those used by Wireless Internet Service Providers) in the U–NII–2C band have a greater potential to cause harmful inference as compared to lower power consumer type devices, the Commission requests comment on whether a geo-location/database requirement should apply only to those devices or to lower power indoor U–NII devices as well.

45. *Unwanted emission limits.* Emissions outside of the U–NII device's occupied bandwidth may have the potential to cause harmful interference into TDWR. Aside from increasing frequency separation or distance separation, U–NII devices may avoid causing interference by lowering the emissions on the radar's fundamental frequency. This equates to lowering all emissions from U–NII devices at the frequencies outside of the device's operating bandwidth. The Commission seeks comment as to whether TPC also contributes to reductions in unwanted emissions. For example, if the TPC

function reduces the fundamental power level by 1 dB, is there a corresponding 1 dB reduction in unwanted emissions?

46. NTIA's report details the measurements and analysis that determine the power levels at which TDWR receivers experience interference from U–NII emissions at an interference-to-noise (I/N) ratio of −8 dB. In its report, NTIA finds that the maximum allowable co-channel interference power that can be received in the TDWR without exceeding the I/N level of −8 dB is shown to be −119 dBm/MHz at the antenna terminals. This equates, for example, to a mainbeam-to-mainbeam interference power density of 43 dBm/MHz between TDWR and U–NII transmitters at a distance of 8 km, or an interference power density of −22 dBm/MHz when the mainbeam of the U–NII device is in the TDWR sidelobe at a distance of 2 km. These power density thresholds are a function of separation distance between TDWR receivers and U–NII transmitters as well as the receive antenna gain of the TDWR in the direction of the U–NII transmitter.

47. The Commission's existing rules for the U–NII–2C band specify that the peak power spectral density shall not exceed 11 dBm in any 1 megahertz band. If transmitting antennas of directional gain greater than 6 dBi are used, both the maximum conducted output power and the peak power spectral density must be reduced by the amount in dB that the directional gain of the antenna exceeds 6 dBi. These rules implicitly allow a maximum EIRP of 17 dBm/MHz in the U–NII–2C band. Additionally, for devices operating within the U–NII–2C band, the Commission's rules specify that all emissions transmitted outside of the U–NII–2C band shall not exceed an EIRP of −27 dBm/MHz. The Commission recognizes, based on NTIA's report, that these two limits may not be sufficient to protect the TDWR from adjacent channel emissions from U–NII devices. Accordingly, the Commission seeks comment on whether requiring new unwanted emission limits for U–NII devices operating in the U–NII–2A and UNII–2C bands is appropriate and whether the Commission should modify its emission limits to reflect NTIA's findings.

48. If the Commission were to impose new limits on U–NII devices, as suggested, the Commission believes that different limits can be set for lower power indoor and higher power outdoor devices. For indoor devices, the Commission believes that setting an out-of-channel emissions limit of −27dBm/MHz maximum EIRP may be appropriate because building materials would likely further attenuate these emissions. When measured outside of the building, the emissions from an indoor device would likely drop to a level that would appear as no more than −41dbm/MHz. An out-of-channel emissions limit of −41 dBm/MHz for outdoor devices may be appropriate as well. The Commission seeks comment on modifying its rules to adopt these out-of-channel limits for indoor versus outdoor U–NII devices, including how the Commission should define the terms ''indoor'' and ''outdoor'', and how different operating requirements for indoor versus outdoor operations can be accommodated through the Commission's equipment authorization and the Commission's enforcement procedures.

49. As an alternative, if the Commission determines that reductions in unwanted emissions are necessary, the Commission could allow outdoor devices to operate with an out-of-channel emissions limit of −27 dBm/MHz peak EIRP as long as the separation distance between the device and the TDWR is at least 53 km. Should the Commission impose this new out-of-channel limit based on the maximum power levels of the devices rather than whether a device is based indoor or outdoor? For instance, the Commission recognizes that lower power device devices provide short-range communications, such as those between computing devices within a very local area and therefore pose less of a potential risk to TDWR operations. Higher power devices, however, are intended to be used in an outdoor environment for longer-range communications. The Commission seeks comment on the assumptions made in its analysis.

50. *Sensing.* If the Commission decides to require that a U–NII device move more than 30 megahertz in frequency from the TDWR, one way to enable this is to require the U–NII device to sense for radar in the channels adjacent to its occupied bandwidth. This will ensure that the unwanted emissions from U–NII devices are placed far enough away in frequency from the TDWR fundamental frequency to preclude harmful interference. The Commission seeks comment on this alternative approach.

51. The DFS mechanism is designed to avoid co-channel interference to the TDWR by dynamically detecting radar signals and avoiding co-channel operation with those systems. The efficacy of the DFS mechanism is dependent upon the U–NII device's ability to detect and avoid a radar pulse within a region of its occupied bandwidth. Specifically, the current measurement procedures require that a U–NII device sense for radar across 80 percent of its occupied bandwidth. With respect to the remaining 20 percent, the Commission does not require sensing in a 10 percent region above or below the occupied bandwidth. The Commission recognizes that currently implementation of the sensing bandwidth will ensure co-channel interference protection only when the radar signal falls within 80 percent of the U–NII device's occupied bandwidth. Therefore, it is possible for the U–NII device to transmit on the same frequency as the radar when the radar signal falls within the 20 percent of occupied bandwidth that does not require sensing. When the radar signal falls within the region of occupied bandwidth that does not require sensing, the U–NII device will continue to transmit. This could result in simultaneous and overlapping transmissions from the U–NII device and the TDWR, which would increase the potential for harmful interference.

52. In addition, NTIA's Third Technical Report suggests that adjacent channel interference is possible when the frequency separation between the radar and the U–NII device is less than a specified amount. For example, when a radar signal falls outside of the sensing bandwidth and occupied bandwidth, and is within 30 megahertz from the U–NII devices' fundamental frequency, the unwanted emissions from the U–NII devices could still cause harmful interference to the TDWR. If the Commission requires that U–NII devices sense for radar on the frequencies immediately adjacent to the occupied bandwidth, the Commission would ensure that the fundamental frequency is more than 30 megahertz away from the radar.

53. The Commission seeks comment on whether it should implement a rule requiring that U–NII devices sense for radar signals at or exceeding 100 percent of its occupied bandwidth, or whether the Commission should continue to reference this, as it does now, as part of the U–NII measurement procedures. The Commission believes that expanding the sensing bandwidth will prevent the co-channel operations between U–NII devices and radars receiver and thus will reduce the potential for harmful interference. The Commission also invites comment on the technical difficulty and cost of implementing this capability in U–NII devices.

4. The U–NII–2A and U–NII–2C Bands

54. DFS is an essential element allowing U–NII devices to share the U-NII-2A and U–NII–2C bands successfully with vital government and military radar systems. As the Commission has gained experience with these devices and the implementation of DFS in the field, it is proposing changes in three areas to improve the utility and reliability of this function, thus ensuring that incumbent services in these bands are protected from interference. These changes include lowering the permitted PSD for lower power devices that use the relaxed sensing threshold, and modifying the Bin-1 radar simulating waveform used in the measurement procedures. The Commission believes that these changes will reduce the potential for co-channel interference to the TDWR and other radar systems. The Commission is also proposing to remove the uniform channel loading requirement found in the U–NII measurement procedures.

55. *DFS Functionality.* To be certified for operation in the U–NII–2A and U–NII–2C bands, devices must include a DFS radar detection function. In its field investigations, the Commission's Enforcement Bureau found that certain models of devices certified for use in these bands were designed so that users could disable the DFS mechanism by setting the device's operating mode to ''Compliance test.'' In other cases, the device's DFS mechanism could be turned off by manually changing the ''Country Code'' for the device. If the DFS mechanism is not active, the device could transmit on an active radar channel and cause harmful interference. The Commission therefore proposes that manufacturers prevent the DFS mechanism from being disabled in devices certified to operate in the U–NII–2A and U–NII–2C bands. The Commission also proposes that U–NII devices certified to operate in these bands must be operated with the DFS function on.

56. Recently, the Office of Engineering and Technology has had to clarify which types of U–NII devices are required to demonstrate compliance with the DFS requirement. The Commission knows that many U–NII devices operate in a master-client configuration, i.e., the master device controls the operational parameters of the client devices. Typically, DFS-enabled master devices would include both the radar sensing and DFS functions, but new configurations are being designed. For example, radios can operate in a network configuration with the sensing function distributed among various ''client'' devices. Also, some radios are designed so that they can communicate directly with each other, rather than through a control point, and thus they could function as either a ''master'' that initiates a network or as a ''client'' device within the network. The Commission proposes that any U–NII device that is subject to the DFS requirements in § 15.407 that is capable of initiating a network must have radar detection functionality and must be approved with that capability.

57. The Commission believes that responsible operation of U–NII devices in these bands is a joint responsibility of both manufacturers and users. The Commission seeks comment on these proposals regarding DFS functionality as well as information on costs to implement them. The Commission also invites comment on whether the DFS requirement has limited in any way the types of applications that have been or could be implemented in the U–NII–2A and U–NII–2C bands, particularly if wider bandwidth devices are deployed in this spectrum. The Commission invites comment on the benefits of adopting this proposal as well as the costs to do so. The Commission asks that commenters' assessments of adopting the proposal weigh and compare the benefits and costs to doing so. This assessment should address which costs should be borne by U–NII device manufacturers, U–NII device operators or other third parties, as appropriate.

58. *Sensing Threshold for Co-channel operation:* The current rules require that the DFS mechanism continuously monitor the device's environment for the presence of radar, both prior to and during operation. The Commission further requires that U–NII devices certified under the rules use two detection thresholds to ascertain whether radar signals were present. The required threshold levels are:

(a) 62 dBm for lower power devices with a maximum EIRP less than 200 mW (23 dBm), and (b) −64 dBm for higher power devices with a maximum EIRP between 200 mW (23 dBm) and 1 W (30 dBm), averaged over 1 μs. The Commission also requires that the conducted peak power spectral density shall not exceed 11 dBm in any 1 megahertz band. If transmitting antennas of directional gain greater than 6 dBi are used, the Commission requires that both the maximum conducted output power and the power spectral density be reduced by the amount in dB that the directional gain of the antenna exceeds 6 dBi. Thus, the implicit limit on the EIRP spectral density is 17 dBm in any 1 megahertz band.

59. The lower power U–NII devices are permitted to use the relaxed sensing threshold because the range at which these devices can potentially cause interference is reduced and thus they are allowed to operate closer to the radar. In order to ensure that interference potential does not increase with the use of the relaxed sensing threshold, the Commission believes that applying a reduction in EIRP spectral density for devices that use the −62 dBm sensing threshold is appropriate. The Commission proposes that devices must operate with both an EIRP of less than 200 mW (23 dBm), and an EIRP spectral density of less than 10 dBm/MHz (10 mW/MHz), in order to use the relaxed sensing detection threshold of −62 dBm. Devices that do not meet the proposed EIRP and EIRP spectral density requirements must use the −64 dBm sensing threshold. The proposed changes will further enhance protection for radars from co-channel interference by reducing both the range and the in-band spectral density emissions of the U–NII device. The Commission seeks comment on this proposal, including the cost to manufacturers to implement it. The Commission notes that a reduction in the EIRP spectral density limit would be consistent with recent actions taken by European Telecommunications Standards Institute (ETSI). Specifically, ETSI chose to restrict a device's use of the relaxed sensing threshold by reducing both the EIRP and the EIRP spectral density by 7 dB to 23 dBm (200 mW) and 10 dBm/MHz (10 mW/MHz), respectively. The Commission invites comment on the benefits of adopting this proposal as well as the costs to do so. The Commission asks that commenter's assessment of adopting the proposal weigh and compare the benefits and costs to do so. This assessment should address which costs should be borne by U–NII device manufacturers, U–NII device operators or other third parties, as appropriate.

60. *Measurement and Testing Procedures.* Under § 2.947(a) of the rules, the Commission will accept data that is measured in accordance with (1) procedures or standards set forth in bulletins or reports prepared by the Commission's Office of Engineering and Technology (OET), (2) procedures or standards that are acceptable to the Commission and are published by a national engineering society, or (3) any other measurement procedure acceptable to the Commission. With respect to the first option, OET's most recent bulletin on measurement procedures for U–NII devices with DFS

capabilities was published in 2006. NTIA has recommended modifications to these 2006 measurement procedures, to further enhance protection for the TDWR. The Commission invites interested parties to comment on these modifications to the measurement procedures, which are set forth in Appendix B of the NPRM, and to propose any additional modifications that are appropriate. Consistent with the Commission's rules and prior practice, the Office of Engineering and Technology will evaluate comments on the recommended changes to the measurement procedures and will issue updated measurement procedures in the future as needed.

61. The Commission's current rules and measurement procedures require that the DFS function provide a uniform spreading of loading over all available channels. The measurement procedure further explains this provision by stating that ''Uniform Channel Spreading'' is the spreading of U–NII devices operating over the DFS bands to avoid dense clusters of devices operating on the same channel. Some manufacturers comply with this requirement by using random channel selection, but the Commission believes that similar benefits could be obtained by manual selection of channels and may actually result in better spectrum usage at a given location. In particular, the Commission notes that enhanced spectrum use may be possible when devices use a very high bandwidth and the number of usable channels is small. The Commission also notes that the trend for U–NII devices is to operate with ever wider bandwidths. Operation over wider bandwidths causes U–NII energy to be spread throughout the frequency band in which the device is operating, rather than concentrated in a narrow bandwidth. This potentially makes the uniform channel spreading requirement unnecessary. The Commission proposes to remove the ''Uniform Channel Spreading'' requirement from the rules and measurement procedures. The Commission also proposes to permit either random channel selection or manual selection of the initial channel. For example, should the Commission permit a device to create a master list of available channels that it would use if they continue to be available? The Commission seeks comment on whether these changes will, in any way, negatively impact spectrum reuse or potentially increase interference to incumbent users. In addition, the Commission's measurement procedures require that system testing be performed with an MPEG test file that streams full motion video at 30 frames per second for channel loading. Experience certifying U–NII devices has indicated that not all U–NII devices are designed for video transmission or support the specific coding format, and so other methods of channel loading are used. The Commission seeks comment on whether specifying video streaming as the preferred channel loading method for compliance measurements is as appropriate today as it was when the measurement procedures were created, or whether the channel loading requirement in the Commission's test procedures should be specified in a more general manner so as only to specify that measurements be conducted with the device under test operating in a loaded condition. The Commission seeks comments on how it should specify alternate means of channel loading for measurement purposes. Additionally, the Commission seeks comment on the effects of wider U–NII device bandwidths on channel loading requirements.

B. Future Unlicensed Operations at 5 GHz

62. The 5.35–5.47 GHz (U–NII–2B) and 5.85–5.925 GHz (U–NII–4) bands have great potential for fostering ongoing technological innovation, expanding broadband access, and encouraging competitive entry. The additional spectrum also would expand opportunities for innovative spectrum access models by creating new avenues for opportunistic and unlicensed use of spectrum and increasing research into new spectrum technologies. Creating ways to access spectrum under a variety of new models, including unlicensed uses, increases opportunity for entrepreneurs and other new market entrants to develop wireless innovations that may not have otherwise been possible under licensed spectrum models.

63. These bands currently are used for various Federal and non-Federal services, and the Spectrum Act requires that the Commission begin a proceeding to modify the part 15 rules to permit unlicensed devices in the U–NII–2B band if, in consultation with NTIA, it determines that licensed users will be protected by technical solutions and that the primary mission of Federal spectrum users will not be compromised by the introduction of unlicensed devices in these bands. Thus, the Commission's goal in this proceeding is to promote efficient use of radio spectrum through spectrum sharing. As part of this collaborative effort and as required by the Spectrum Act, NTIA has published a report, prepared in consultation with Department of Defense and other impacted Federal agencies, evaluating spectrum-sharing technologies and the risk to Federal users of unlicensed operations in the U–NII–2B and U–NII–4 bands.

64. The Commission explores the potential for future unlicensed operations in the 5 GHz band, incumbent operations in the U–NII–2B and U–NII–4 bands, and the technical requirements and sharing technologies and techniques that could be used to protect Federal and non-Federal incumbent operations. The Commission also invites comments on the NTIA 5 GHz Report itself, including its underlying assumptions and risk assessments.

1. Future Unlicensed Operations at 5 GHz

65. The current U–NII bands are already being used for a variety of different commercial uses such as wireless internet services, cordless phone, scientific and medical applications, etc. In this proceeding, the Commission seeks comment on what types of uses could be deployed in the U–NII–2B and U–NII–4 bands, used either independently of the current U–NII bands or in conjunction with them. The Commission is interested in knowing how companies of different types might deploy U–NII devices, what types of services they might offer, and where they might deploy them. The Commission is particularly interested in gathering information on ongoing industry standards activity and international efforts to harmonize uses of the 5 GHz band to make more efficient use of the 5 GHz spectrum.

66. The Commission knows, for example, that unlicensed and licensed broadband networks often complement one another in important ways. The availability of unlicensed Wi-Fi networks in many locations enables licensed wireless providers to take data traffic off of their networks, thus reducing network congestion and delivering a better overall quality of service. Wi-Fi technology also can be ''networked'' to provide wider geographic coverage and, when configured this way, may be used by some service providers in offering broadband service.

67. The introduction of the IEEE 802.11ac standard, can open new windows to wireless broadband for many users. The deployment of wide channel bandwidths with higher data rates in the 5 GHz band can help meet the challenge that rapid growth in

demand has posed for the wireless industry which has called for more spectrum to increase network capacity. The new standard has the potential to create new avenues for opportunistic use of spectrum in diverse broadband services. Some forecasts predict that in 2015, shipments of mobile phones with embedded Wi-Fi are projected to approach 800 million and by the same time 100 percent of mobile hotspot shipments will be 802.11ac enabled. Infonetics forecasts the global carrier Wi-Fi equipment market to grow significantly at least through 2016, when it will hit $2.1 billion. The Commission seeks comment on how the introduction of this new standard might be implemented in the U NII bands and how these developments should inform the Commission's consideration of technical requirements for these bands and sharing technologies and techniques. The Commission also invites comment on whether some technologies or techniques, such as DFS, might limit the types of applications that could be implemented in the U–NII bands, particularly if wider bandwidth devices are deployed in this spectrum.

68. Also, at the 2012 World Radio Conference, the United States along with other countries agreed that the next World Radio Conference in 2015 (WRC–15) should consider additional spectrum allocations to the mobile service for the development of terrestrial mobile broadband applications. In preparation for WRC–15, the International Telecommunications Union initiated spectrum sharing studies that consider possible expansion of the existing international allocations to the mobile services in the 5 GHz band which are used primarily by the radio local area network (RLAN) devices. The Commission seeks comment on how these activities should inform the Commission's consideration of technical requirements for these bands and sharing technologies and techniques in the following paragraphs. The Commission also seeks comment on importance and benefits of harmonization between the Commission's U–NII rules and the international radio regulations.

2. Incumbent Services in the U–NII–2B Band

69. The 5.35–5.47 GHz band is allocated on a primary basis to the Earth Exploration Satellite, Space Research, and Radiolocation Services for Federal operations and on a secondary basis for non-Federal operations. The 5.35–5.46 GHz band segment is allocated on a primary basis to the Aeronautical Radionavigation Service for both Federal and non-Federal operations. The 5.46–5.47 GHz band segment is allocated on a primary basis to the Radionavigation Service for both Federal and non-Federal operations.

a. Overview of Federal Systems

70. *RADAR Systems.* The DoD uses the 5.35–5.47 GHz band for a wide variety of ground-based, shipborne, and airborne radars. These military radars have the operational capability to tune across the entire 5.25–5.725 GHz frequency range and can operate on a fixed frequency or can employ frequency hopping techniques. In the past, these radars have operated on or near military installations. However, situations may arise where these radars have to be used more widely in support of homeland security. One of the areas of concern in assessing interference to military radars stems from future radar deployments and the expanding role of military radars in support of homeland defense. This expanded role could result in a requirement to deploy military radars in cities and metropolitan areas where unlicensed devices will have their highest usage. In addition to DoD, several other agencies operate radar systems in the band. The Coast Guard operates shipborne radars, which are vital sensors for safe navigation of waterways. NASA uses this band for test and launch range instrumentation radars to track rockets, missiles, satellites, launch vehicles, and other targets. NOAA operates radar systems in this band on ''Hurricane Hunter'' aircraft. The Department of Energy operates radar systems and associated transponders in the band at two test ranges in the United States.

71. *Spaceborne Altimeter Radar Systems.* NASA, in joint ventures with the French agency, Centre National d'Etudes Spatiales (CNES), operates a space-based altimeter system in the 5.14–5.46 GHz band that is used to obtain measurements of the Earth's ocean surface height.

72. *Earth Exploration Satellite.* Synthetic aperture radar (SAR) systems in the 5.35–5.47 GHz band perform space-based observations and measurements of surface topography, soil moisture, and sea surface height. The higher quality data collected using wideband SARs allow scientists to gain new insights into the prediction of climatic changes. These wideband SARs also provide the higher resolution necessary for commercial applications, such as high-resolution surface mapping. Canada operates an Earth exploration-satellite, known as RADARSAT, in the 5.35–5.47 GHz band to provide mission critical data in support of national security, public safety, law enforcement, and civilian applications in Canada and the United States. These applications include disaster management, response and recovery for safety of life, ice monitoring, surveillance, hydrology, mapping, and geology, safety of navigation, agriculture, and forestry. For example, the United States Coast Guard International Ice Patrol uses RADARSAT data operationally to detect and track icebergs.

73. *Unmanned aircraft systems (UAS).* DoD utilizes this band for the testing and operation of unmanned aircraft system (UAS) datalinks from aircraft-to-ground and from ground-to-aircraft. The command link, a ground data terminal transmitter, operates at 5.625–5.85 GHz and the return link (UAS transmitter) transmits at 5.25–5.475 GHz. The Army, Navy, and Air Force operate UASs in the 5 GHz frequency range for intelligence, surveillance, and reconnaissance; combat search and rescue; and real-time full-motion video for target development. The Department of Homeland Security also operates UASs in this band for drug interdiction and border surveillance operations. In addition, NASA also operates a limited number of systems in the 5.35–5.47 GHz band that are used for downlink transmissions of data to ground control receivers.

b. Overview of Non-Federal Systems

74. The types of Federal and non-Federal systems in the 5.35–5.47 GHz band are similar except that non-Federal users in the Earth Exploration Satellite, Space Research, and Radiolocation Services operate on a secondary basis. Broadcast and media entities use radars operating in the 5.35–5.47 GHz band for tracking storms and providing weather radar information to the public via news and weather reporting. Weather radars are employed by broadcasters throughout the USA and used to detect supercell storms capable of developing tornados and severe weather. Local TV stations throughout the country utilize 5.35–5.47 GHz band providing viewers with weather maps, weather pictures, and informing the public on a range of local and regional weather warnings. Part 90 of FCC rules permit the operation of weather radar services in the 5.35–5.47 GHz band.

3. Incumbent Services in the U–NII–4 Band

75. The 5.85–5.925 GHz band is allocated on a primary basis to the Radiolocation Service for Federal operations and to the Fixed Satellite

(Earth to space) and Mobile Services for non-Federal operations. This band is also allocated on a secondary basis to the Amateur Service for non-Federal operations.

a. Overview of Federal Systems

76. The radars that operate in the 5.825–5.925 GHz band are primarily military surveillance and test range instrumentation systems and can be either mobile or transportable. In addition to the DoD operation, NASA, NOAA, and Department of Energy operate radar systems in the 5.85–5.925 GHz band throughout the United States.

b. Overview of Non-Federal Systems

77. *Fixed Satellite Services (FSS).* The C-band is divided into a heavily-used ''conventional'' segment (3.7–4.2 GHz downlink and 5.925–6.425 GHz uplink) and a lightly-used ''extended'' segment (3.6–3.7 GHz downlink and 5.85–5.925 GHz and 6.425–7.075 GHz uplink). The non-Federal fixed-satellite service allocation in the extended C-band FSS (5.85–5.925 GHz) is limited to international inter-continental systems and is subject to case-by-case electromagnetic compatibility analysis. Earth stations in stationary locations communicate uplink with geostationary satellites such as Intelsat, Inmarsat, JCSAT–2, Mabuhay, New Skies, and Galaxy. The earth stations and satellites use directional antennas which, along with the separation between the satellites, prevent interference with earth stations communicating with adjacent satellites. The FSS operations in the 5.85–5.925 GHz band are authorized under Part 25 of the FCC rules.

78. The FSS is widely used to provide a variety of commercial services domestically and internationally. For example, the FSS supports video distribution both on point-to-point basis and point-to-multipoint bases. The FSS also provides network services consisting of ''backbone'' capacity for point-to-point trunking for voice, data or Internet traffic; backhaul of communications services; and redundancy and restoration of communications services when other primary technologies fail. Further, the FSS is used to provide corporate, government, and military voice and data communications, as well as broadband and video services directly to the home.

79. *Intelligent Transportation Service (ITS).* The non-Federal Mobile allocation is limited to Dedicated Short Range Communications Service (DSRC) systems operating in the Intelligent Transportation System radio service. ITS is a national program aimed at using state-of-the-art communications system to make travel more efficient, safer and convenient for motorists, transit riders, commercial vehicle operators and public safety providers. Through the use of technologies such as roadside and/or overhead Variable Message Signs, Closed Circuit TV, Highway Advisory Radio transmitters, traffic counter loops and Transcom's System for Managing Incidents and traffic flow monitors, real-time traffic information is collected and conveyed to the traveling public. This multi-modal information then allows motorists to make smarter choices about how, when and where to travel.

80. DSRC is a wireless ITS system designed for automotive use. In October 1999, the FCC allocated 75 megahertz of spectrum in the 5.85–5.925GHz band for DSRC to be used by ITS. DSRC is a two-way short- to- medium-range wireless communications capability that permits very high data transmission critical in communications-based active safety applications. DSRC which involves vehicle-to-vehicle (V2V) and vehicle-to-infrastructure (V2I) communications can save lives by warning drivers of an impending dangerous condition or event in time to take corrective or evasive actions. Vehicle safety applications that use V2V and V2I communications need secure, wireless interface dependability in extreme weather conditions, and short time delays; all of which are facilitated by DSRC. FCC grants licenses for state and regional transportation agencies to operate DSRC roadside units, while DSRC onboard units are licensed by rule under Part 95.

81. *Amateur Radio.* Amateur service stations are permitted to transmit in the 5.85–5.925 GHz frequency segment on a secondary basis. Operation of these stations in this frequency segment must not cause harmful interference to, and must accept interference from, authorized stations in the fixed-satellite (earth to space) and mobile services (DSRC) and also stations authorized by other nations in the fixed service. The FCC does not have detailed information on use of this band by amateur service stations.

4. Technical Requirements for U–NII–2B and U–NII–4 Bands

82. The technical requirements for U–NII devices operating in the U–NII–2B and U–NII–4 bands will depend ultimately on a determination of the types of unlicensed operations that can be supported while maintaining interference protection to incumbent Federal and non-Federal users. Nonetheless, the Commission believes that because the types of incumbent services across the 5 GHz spectrum share similar characteristics, the technical requirements for unlicensed devices also could share similar characteristics.

83. *U–NII–2B Band.* The U–NII–2B band falls between the existing U–NII–2A and U–NII–2C bands. Most significantly, all three bands are allocated for Federal Earth Exploration Satellite, Space Research and Radiolcoation Services on a primary basis, and sensitive services such as Federal radar systems operate across all three bands. This suggests that U–NII devices could likely operate under the same technical framework specified in rule § 15.407 in all three bands ranging from 5.25–5.725 GHz. Thus, U–NII devices could operate across 475 megahertz either indoors or outdoors under the following power and emission limits: maximum output power limit is the lesser of 250 milliwatts and 11dBm+10 Log (B), where B is 26 dB emission bandwidth; antenna gain requirement is 6 dBi for non-point to-point systems and 23 dBi for point-to-point system; and power and power spectral density reduction is applied if the antenna gain exceeds these values. The maximum power spectral density should not exceed 11 dBm in any 1 megahertz band, and the out-of-band emission limit shall not exceed an EIRP limit of -27 dBm/MHz. The out-of-channel emissions limit for an outdoors device should not exceed -41 dBm/MHz. The Commission invites comment on these technical parameters for U–NII–2B devices.

84. *U–NII–4 Band.* The U–NII–4 band is situated 25 megahertz above the U–NII–3 band. A primary Federal allocation for Radiolocation Services and a non-Federal secondary allocation for Amateur Services range across the U–NII–3 and U–NII–4 bands, including the 25 megahertz located between them at 5.825-5.85 GHz. This suggests that U–NII devices should operate under the same framework and technical requirements specified in § 15.407 in all three bands ranging from 5.725–5.925 GHz. The Commission proposes that the U–NII–3 rules be applied to the upper adjacent 25 megahertz band segment at 5.825-5.85 GHz. If the Commission adopts this proposal, it believes that the same framework and technical requirements specified in § 15.407 should apply across the expanded U–NII–3 and the U–NII–4 bands. Thus, U–NII devices could operate across 200 megahertz either indoors or outdoors under the following power and emission limits: maximum output power limit is the lesser of 1Watt and 17dBm+10 Log (B) where B is 26 dB emission

bandwidth; antenna gain requirements is 6 dBi for non-point to-point systems and 23 dBi for point-to-point systems; and power and power spectral density reduction is applied if the antenna gain exceeds these values. The maximum power spectral density should not exceed 17 dBm in any 1 megahertz band, and out-of-band emissions within the frequency range from the band edge to 10 megahertz above or below the band edge should not exceed an EIRP limit of −17 dBm/MHz, and for frequencies 10 megahertz or greater, the emissions should not exceed an EIRP of −27 dBm/MHz. The Commission invites comment on these technical parameters for U–NII–4 devices.

85. *Spectrum Sensing/DFS and TPC.* The rules require that U–NII devices operating in the U NII-2A and U–NII–2C bands employ Dynamic Frequency Selection (DFS) in order to avoid causing interference to Federal radar systems. The Commission seeks comment whether and how to integrate a DFS algorithm into U–NII–2B and U–NII–4 bands. What are the advantages and/or disadvantages of utilizing DFS in these bands? What are the technical challenges of DFS technology implementation in the U–NII–2B and U–NII–4 bands? What changes are necessary in the existing DFS model to mitigate possible interference with incumbent radar system in the new bands? What radar parameters/signal detection threshold should be used for DFS to avoid assigning the occupied radar channel to U–NII device? If the U–NII device would have to perform sensing outside its occupied bandwidth (adjacent channel sensing), what would be the technical and cost implications of such deployment? Should the radar signal detection be sensed by base/fix stations, mobile stations or all? Are there technical solutions other than DFS that would prevent interference to Federal radar systems? Could database access offer any benefits for providing access to this spectrum while protecting incumbent services against harmful interference?

86. The signal detection technology currently used by U–NII–2A and U–NII–2C DFS devices senses radar signals whose parameters (such as pulsewidth, pulse repetition interval, and the number of pulses per burst) are well-known and can be used to improve signal detection. To improve range resolution and accuracy, some radar systems operating in the U–NII–2B and U–NII–4 bands employ short (sub-microsecond) pulse widths. The smallest pulsewidth used in the development of the existing U–NII DFS regulations was 1 microsecond. A narrower radar pulsewidth used in conjunction with the higher data rates associated with the 802.11ac standard could affect a device's ability to detect pulsed radar signals. The Commission seeks comment on the ability of signal sensing spectrum-sharing technologies to detect sub-microsecond pulses and whether the current DFS mechanism would protect the current and future radars that employ sub-microsecond pulses. Are there other detection mechanisms that could be considered?

87. In addition, some fielded and in-development radar systems in the U–NII–2B and U–NII–4 bands include low-power modes or are designed to avoid detection to meet their mission requirements. The Commission seeks comment on whether DFS or any other spectrum-sharing technology would be capable of protecting such radar systems from possible interference.

88. Finally, what measures should be taken to protect non-radar systems that operate in the U–NII–2B and U–NII–4 bands and what is the cost implication for manufacturers, vendors and consumers? The Commission seeks comment on what types of sharing technology or techniques could be used to protect non-radar systems, such as the DSRCS which includes both road side units (RSU-fixed) and on board units (OBU-mobile) operating under a primary allocation. For example, U–NII signal detection technologies used for DFS may not be able to detect signals from incumbents other than radar systems. Could U–NII devices detect signals from both DSRC fixed and mobile stations? The Commission seeks comments on evolving technologies that may help to detect non-radar signals and to protect those operations from harmful interference.

5. NTIA 5 GHz Report

89. NTIA has published a report of its initial study on the potential for U–NII devices to share the U–NII–2B and U–NII–4 bands with incumbent Federal operations. The report includes an initial evaluation of known and proposed spectrum-sharing technologies and also completed a high-level evaluation of the risk to Federal users if the Commission allows U–NII devices to operate in the U–NII–2B and U–NII–4 bands.

90. NTIA, in collaboration with the Federal agency members of the Policy and Plans Steering Group (PPSG), developed a work plan for evaluating the risks to Federal systems operating in the U–NII–2B and U–NII–4 bands. The plan outlined the technical and operational information necessary to perform the evaluation. Several Federal agencies also conducted preliminary electromagnetic compatibility and interference analyses to begin to quantify risks to their systems. NTIA also used input from industry stakeholders related to their projected technical and deployment parameters for U–NII devices, and reviewed domestic and international technical studies used in the development of the existing U–NII regulations in performing their study. For the study, NTIA assumed that the FCC's existing U–NII TPC and DFS regulations would be extended to the U–NII–2B and U–NII–4 bands, and that the Federal agencies will not have to alter their systems or operations to accommodate U–NII devices. The report concludes that additional analysis is needed to determine the feasibility of introducing U–NII devices into these two bands and includes a tentative schedule and milestones for quantitative study consistent with the ongoing work for WRC–15.

91. The Commission seeks comments on all aspects of the NTIA 5 GHz Report, particularly the spectrum sharing technologies and risk analysis described in the following paragraphs.

a. Spectrum Sensing Technologies

92. The report addresses three spectrum sharing technologies that might be used as reference models in the U–NII–2B and U–NII–4 bands. These are classified as sensing based, geo-location based, and beaconing/pilot channel technologies.

93. *Sensing based technology.* Sensing based spectrum sharing approaches enable radio devices to identify unused spectrum by assessing and determining current use of a particular frequency through, for example, transmitter detection, cooperative sensing, or interference detection. Transmitter detection is the capability of determining if a signal from another transmitter is using a frequency nearby by correlating a known signal with an unknown signal (matched filter detection), measuring signal energy (signal detection), or utilizing statistical means. Cooperative sensing incorporates information about the spectral environment from multiple sensing devices to accurately determine if spectrum is in use. Interference detection refers to sensing changes in the local noise floor to determine if additional traffic can be tolerated by primary users.

94. *Geo-Location based technology.* This approach requires the development of a database infrastructure that contains information about incumbent spectrum users which, when used in combination

with a geo-location system (e.g., the Global Positioning System (GPS)) and an interference-free location-data communications link, provides a mechanism to facilitate spectrum sharing with incumbents operating at fixed or known locations with known technical parameters. Geo-location spectrum-sharing technologies can be used in conjunction with a well maintained updated database to define geographic areas where device operation will and will not be permitted, or where limitations should be placed on the operating parameters to enable spectrum sharing.

95. *Beaconing/pilot channel technology.* In a beacon spectrum sharing approach, a new entrant's transceiver must have the ability to receive a control signal sent continuously by incumbent systems at times when transmissions by the new entrant are permitted. The new entrant may not commence transmissions if beacon signals are not received. If any beacon signal is present but then stops while the new entrant is transmitting, transmissions must cease within a specified time interval. The beacons could be a radio frequency signal sent by incumbents on designated control frequencies, or they may be signals received over a physical connection such as fiber, copper, or coaxial cable. Transmission by the new entrant would cease if any beacon signal suffers from unfavorable propagation conditions or the physical connection is lost such that the beacon signals are not properly received by the new entrant. In other words, if the new entrant cannot hear the beacon signal, it must cease transmission.

b. Risk Analysis

96. The NTIA 5 GHz Report provides an overview of the risk elements to each type of Federal operation and suggests some mitigation strategies associated with each risk element for further investigation.

97. *Description of risk elements in U–NII–2B band.* The report indicates that changes in radar signal parameters may impact U–NII device detection of radar and changes in U–NII device deployment and technical parameters may result in harmful interference into radar systems. The report also emphasizes that the current U–NII regulations may introduce hidden node interference and may not adequately protect current and future radar systems while changes in the existing U–NII DFS detection parameters, including channel response time, may not sufficiently shield current and future radar systems from serious degradation. The report extends the risk element to the U–NII devices operating on an adjacent channel and states this may cause harmful interference into radar systems. The report also specifies that the radar receiver interference protection criteria used to develop existing U–NII DFS regulations may not address low-level interference effects.

98. The report states that the existing U–NII signal detection technologies may not be capable of detecting UAS signals because the existing U–NII regulations were not developed to detect such signals (there is no UAS signal in the bands governed by the existing U–NII regulations) and changes to U–NII DFS detection parameters may not protect UAS operations from performance degradation. The report also points out that existing U–NII regulations were not developed to protect spaceborne receivers. The report also states that the density of U–NII devices is one of the key parameters in determining the amount of potential interference to the incumbent Federal systems.

99. *Description of risk elements in U–NII–4 band.* The report cites the same risks to radar systems operating in the U–NII–4 band as it cites for the U–NII–2B band discussed above. The report also states that the existing U–NII signal detection technologies may not be capable of detecting DSRC signals because the existing U–NII regulations were not originally developed to detect such signals (there is no DSRC signal in the bands governed by the existing U–NII regulations) and changes to U–NII DFS detection parameters may not protect DSRC operations from performance degradation.

C. Other Issues

1. Miscellaneous Rule Modifications

100. The Commission also believes that there are a number of other changes that need to be considered to simplify and clarify part 15 of the rules. The Commission's analysis revealed several sections of the rules that reference procedures or provisions that are no longer in use and therefore, may no longer be necessary. The Commission has also identified sections of the rules that need to be updated with minor revisions.

2. Transition Periods

101. The Commission proposes to establish a 12-month timetable after the effective date of any new or modified rules that the Commission eventually decides to adopt in this proceeding for manufacturers to produce U–NII devices that comply with new or modified rules. The Commission also proposes to establish a 2 year timetable after the effective date of any new or modified rules for requiring that any U–NII devices manufactured in or imported into the United States for sale comply with the new or modified rules. The Commission believes that a 12-month transition period should provide sufficient time for manufacturers to design equipment that complies with any new or modified rules and to obtain equipment certification. Therefore, the Commission would provide transitional provisions in its rules to allow for the certification of U–NII devices under the current rules for up to 12 months after the new or modified rules are published in the **Federal Register**. Beginning 12 months after the effective date of the new or modified rules, equipment certification could no longer be obtained for U–NII devices that do not meet the new requirements. However, until the end of the 2 year transition period, the Commission would permit Class II permissive changes for equipment certified prior to the 12-month transition date as well as their continued manufacture, marketing, installation, and importation. After the end of the 2-year transition period, Class II permissive changes for such devices would not be permitted nor would their manufacture, marketing, installation, or importation. The Commission finds that these requirements would facilitate the transition to new requirements without unduly impairing the availability or cost of U–NII devices or imposing undue burdens on manufacturers, translation services providers, or the public. Comments are requested on these proposed transition provisions.

102. The Commission also proposes that U–NII devices that are already installed or in use should be grandfathered for the life of the equipment. Requiring the immediate upgrade or replacement of existing U–NII devices would be a financial burden on operators of these devices. The Commission believes that grandfathering equipment that is installed and operating will ensure that entities will be permitted to operate their existing U–NII devices until replacement is necessary or desired due to age, malfunction, or other concerns. The Commission seeks comments on this proposal.

Initial Regulatory Flexibility Analysis

103. As required by the Regulatory Flexibility Act of 1980, as amended (RFA), the Commission has prepared this present Initial Regulatory Flexibility Analysis (IRFA) of the possible significant economic impact on small entities by the policies and rules

proposed in this Notice of Proposed Rule Making (NPRM). Written public comments are requested on this IRFA. Comments must be identified as responses to the IRFA and must be filed by the deadlines specified in the NPRM for comments. The Commission will send a copy of this NPRM, including this IRFA, to the Chief Counsel for Advocacy of the Small Business Administration (SBA). In addition, the NPRM and IRFA (or summaries thereof) will be published in the **Federal Register**.

A. Need for, and Objectives of, the Proposed Rules

104. This NPRM proposes to amend part 15 of the FCC's rules governing the operation of unlicensed National Information Infrastructure (U–NII) devices in the 5 GHz band. U–NII devices are unlicensed intentional radiators that operate in the frequency bands 5150–5350 MHz and 5470–5825 MHz that use wideband digital modulation techniques to provide a wide array of high data rate mobile and fixed communications for individuals, businesses, and institutions. The NPRM proposes to modify certain technical requirements for U–NII devices to ensure that these devices can continue to operate successfully while protecting incumbent spectrum users.

B. Legal Basis

105. This action is authorized under Sections 1, 4(i), 302, 303(f) and (r), 332, and 337 of the Communications Act of 1934, as amended, 47 U.S.C. 1, 4(i), 154(i), 302, 303(f) and (r), 332, 337.

C. Description and Estimate of the Number of Small Entities to Which the Proposed Rule Will Apply

106. The RFA directs agencies to provide a description of, and, where feasible, an estimate of, the number of small entities that may be affected by the rules adopted herein. The RFA generally defines the term ''small entity'' as having the same meaning as the terms ''small business,'' ''small organization,'' and ''small governmental jurisdiction.'' In addition, the term ''small business'' has the same meaning as the term ''small business concern'' under the Small Business Act. A ''small business concern'' is one which: (1) Is independently owned and operated; (2) is not dominant in its field of operation; and (3) satisfies any additional criteria established by the Small Business Administration (SBA).

107. *Radio and Television Broadcasting and Wireless Communications Equipment Manufacturing.* The Census Bureau defines this category as follows: ''This industry comprises establishments primarily engaged in manufacturing radio and television broadcast and wireless communications equipment. Examples of products made by these establishments are: transmitting and receiving antennas, cable television equipment, GPS equipment, pagers, cellular phones, mobile communications equipment, and radio and television studio and broadcasting equipment.'' The SBA has developed a small business size standard for Radio and Television Broadcasting and Wireless Communications Equipment Manufacturing, which is: all such firms having 750 or fewer employees. According to Census Bureau data for 2007, there were a total of 939 establishments in this category that operated for part or all of the entire year. Of this total, 912 had less than 500 employees and 17 had more than 1000 employees. Thus, under that size standard, the majority of firms can be considered small.

D. Description of Projected Reporting, Record Keeping, and Other Compliance Requirements

108. The NPRM proposes to establish a 12-month timetable after the effective date of any new or modified rules that we eventually decide to adopt in this proceeding for manufacturers to produce U–NII devices that comply with new or modified rules. We also propose to establish a 2-year timetable after the effective date of any or modified rules for requiring that any U–NII devices manufactured in or imported into the United States for sale comply with the new or modified rules. We believe that a 12-month transition period should provide sufficient time for manufacturers to design equipment that complies with any new or modified rules and to obtain equipment certification. Therefore, we would provide transitional provisions in our rules to allow for certification of U–NII devices under the current rules for up to 12 months after the new or modified rules are published in the **Federal Register**. Beginning 12 months after the effective date of the new or modified rules, equipment certification could no longer be obtained for U–NII devices that do not meet the new requirements. However, until the end of the 2-year transition period, we would permit Class II permissive changes for equipment certified prior to the 12-month transition date as well as their continued manufacture, marketing, installation, and importation. After the end of the 2-year transition period, Class II permissive changes for such devices would not be permitted nor would their manufacture, marketing, installation, or importation. We find that these requirements would facilitate the transition to new requirements without unduly impairing the availability or cost of U–NII devices or imposing undue burdens on manufacturers, translation services providers, or the public.

E. Steps Taken To Minimize Significant Economic Impact on Small Entities, and Significant Alternatives Considered

109. The RFA requires an agency to describe any significant alternatives that it has considered in reaching its proposed approach, which may include the following four alternatives (among others): (1) The establishment of differing compliance or reporting requirements or timetables that take into account the resources available to small entities; (2) the clarification, consolidation, or simplification of compliance or reporting requirements under the rule for small entities; (3) the use of performance, rather than design, standards; and (4) an exemption from coverage of the rule, or any part thereof, for small entities.

110. The proposals contained in this Notice of Proposed Rulemaking (NPRM) are aimed at improving the sharing of the spectrum between U–NII devices and other spectrum users. This NPRM proposes to amend Part 15 of our rules governing the operation of Unlicensed National Information Infrastructure (U–NII) devices in the 5 GHz band. U–NII devices are unlicensed intentional radiators that operate in the frequency bands 5.15–5.35 GHz and 5.47–5.825 GHz, and which use wideband digital modulation techniques to provide a wide array of high data rate mobile and fixed communications for individuals, businesses, and institutions. Since the Commission first made available spectrum in the 5 GHz band for U–NII in 1997, we have gained much experience with these devices. We believe that the time is now right for us to revisit our rules, and, in this NPRM, we propose to modify certain technical requirements for U NII devices to ensure that these devices do not cause harmful interference and thus can continue to operate in the 5 GHz band and make broadband technologies available for consumers and businesses.

111. We also seek comment on making available an additional 195 megahertz of spectrum in the 5.35–5.47 GHz and 5.85–5.925 GHz bands for U–NII use. This could increase the spectrum available to unlicensed devices in the 5 GHz band by approximately 35 percent and would represent a significant increase in the

spectrum available for unlicensed devices across the overall radio spectrum. The initiation of this proceeding satisfies the requirements of § 6406 (a) of the ''Middle Class Tax Relief and Job Creation Act of 2012'' which requires the Commission to begin a proceeding to modify part 15 of title 47, Code of Federal Regulations, to allow unlicensed U–NII devices to operate in the 5350–5470 MHz band. We believe that an increase in capacity gained from 195 megahertz of additional spectrum, combined with the ease of deployment and operational flexibility provided by our U–NII rules, would continue to foster the development of new and innovative unlicensed devices, and increase wireless broadband access and investment.

F. Federal Rules That May Duplicate, Overlap, or Conflict With the Proposed Rule

112. None.

Ordering Clauses

113. Pursuant to sections 1, 4(i), 7(a), 301, 303(f), 303(g), 303(r), and 307(e) of the Communications Act of 1934, as amended, 47 U.S.C. 151, 154(i), 157(a), 301, 303(f), 303(g), 303(r), and 307(e), and section 6406(a) of the Middle Class Tax Relief and Job Creation Act of 2012, Public Law 112–96, § 6406(a), 126 Stat. 156, 231 (2012), the Notice of Proposed Rule Making *is adopted.*

114. The Commission's Consumer and Governmental Affairs Bureau, Reference Information Center, *shall send* a copy of the *Notice of Proposed Rule Making,* including the Initial Regulatory Flexibility Analysis, to the Chief Counsel for Advocacy of the Small Business Administration.

List of Subjects in 47 CFR Part 15

Communications equipment.

Federal Communications Commission.

Marlene H. Dortch,

Secretary.

For the reasons discussed in the preamble, the Federal Communications Commission proposes to amend 47 CFR part 15 as follows:

PART 15—RADIO FREQUENCY DEVICES

■ 1. The authority citation for Part 15 continues to read as follows:

Authority: 47 U.S.C. 154, 302a, 303, 304, 307, 336, 544a, and 549.

■ 2. Section 15.215 is amended by adding a second sentence to paragraph (c) to read as follows:

§ 15.215 Additional provisions to the general radiated emission limitations.

* * * * *

(c) * * * In the case of intentional radiators operating under the provisions of Subpart E, the emission bandwidth may span across multiple frequency bands identified in that Subpart. * * *

■ 3. Section 15.247 is amended by:

■ a. Revising the first sentence of paragraphs (a)(2) and (b)(3);

■ b. Removing paragraphs (b)(4)(i) through (iii);

■ c. Revising paragraph (c)(1)(ii) and the last sentence of paragraph (f) to read as follows:

§ 15.247 Operation within the bands 902–928 MHz, 2400–2483.5 MHz, and 5725–5850 MHz.

* * * * *

(a) * * *

(2) Systems using digital modulation techniques may operate in the 902–928 MHz, and 2400–2483.5 MHz bands. * * *

(b) * * *

(3) For systems using digital modulation in the 902–928 MHz, and 2400–2483.5 MHz bands: 1 Watt. * * *

* * * * *

(c) * * *

(1) * * *

(ii) Frequency hopping systems operating in the 5725–5850 MHz band that are used exclusively for fixed, point-to-point operations may employ transmitting antennas with directional gain greater than 6 dBi without any corresponding reduction in transmitter conducted output power.

* * * * *

(f) * * * The power spectral density conducted from the intentional radiator to the antenna due to the digital modulation operation of the hybrid system, with the frequency hopping operation turned off, shall not be greater than 8 dBm in any 3 kHz band during any time interval of continuous transmission.

* * * * *

■ 4. Section 15.403 is amended by revising paragraph (m) to read as follows:

§ 15.403 Definitions.

* * * * *

(m) *Maximum Power Spectral Density.* The maximum power spectral density is the maximum power in the specified measurement bandwidth, within the U–NII device operating band.

* * * * *

■ 5. Section 15.407 is amended by:

■ a. Revising paragraphs (a)(3) through (6) and (b)(4);

■ b. Redesignating paragraphs (f) through (h) as paragraphs (g) through (i), and;

■ c. Adding new paragraph (f) and paragraph (j) to read as follows:

§ 15.407 General technical requirements.

(a) * * *

(3) For the band 5.725–5.850 GHz, the maximum conducted output power over the frequency band of operation shall not exceed 1 W. In addition, the maximum power spectral density shall not exceed 8 dBm in any 3–kHz band. If transmitting antennas of directional gain greater than 6 dBi are used, both the maximum conducted output power and the maximum power spectral density shall be reduced by the amount in dB that the directional gain of the antenna exceeds 6 dBi. However, fixed point-to-point U–NII devices operating in this band may employ transmitting antennas with directional gain up to 23 dBi without any corresponding reduction in the transmitter peak output power or maximum power spectral density. For fixed, point-to-point U–NII transmitters that employ a directional antenna gain greater than 23 dBi, a 1 dB reduction in peak transmitter power and maximum power spectral density for each 1 dB of antenna gain in excess of 23 dBi would be required. Fixed, point-to-point operations exclude the use of point-to-multipoint systems, omnidirectional applications, and multiple collocated transmitters transmitting the same information. The operator of the U–NII device, or if the equipment is professionally installed, the installer, is responsible for ensuring that systems employing high gain directional antennas are used exclusively for fixed, point-to-point operations.

Note To Paragraph (a)(3): The Commission strongly recommends that parties employing U–NII devices to provide critical communications services should determine if there are any nearby Government radar systems that could affect their operation.

(4) The maximum conducted output power must be measured over any interval of continuous transmission using instrumentation calibrated in terms of an rms-equivalent voltage.

(5) The maximum power spectral density is measured as a conducted emission by direct connection of a calibrated test instrument to the equipment under test. If the device cannot be connected directly, alternative techniques acceptable to the Commission may be used. Measurements are made over a bandwidth of 1 MHz or the 26-dB emission bandwidth of the device, whichever is less. A resolution bandwidth less than the measurement bandwidth can be used, provided that the measured power is integrated to

show total power over the measurement bandwidth. If the resolution bandwidth is approximately equal to the measurement bandwidth, and much less than the emission bandwidth of the equipment under test, the measured results shall be corrected to account for any difference between the resolution bandwidth of the test instrument and its actual noise bandwidth.

(6) The ratio of the maximum peak excursion of the modulation envelope (measured in a 1 MHz bandwidth using a peak hold function) to the maximum power spectral density during an interval of continuous transmission (measured in a 1 MHz bandwidth) shall not exceed 13 dB. Each of the two maxima shall be separately determined across the full emission bandwidth. If the emission bandwidth is less than 1 MHz, the measurement may be performed in a resolution bandwidth narrower than 1 MHz but wider than or equal to the emission bandwidth.

(b) * * *

(4) For transmitters operating in the 5.725–5.850 GHz band: all emissions within the frequency range from the band edge to 10 MHz above or below the band edge shall not exceed an e.i.r.p. of −17 dBm/MHz; for frequencies 10 MHz or greater above or below the band edge, emissions shall not exceed an e.i.r.p. of −27 dBm/MHz.

* * * * *

(f) Within the 5.725–5.85 GHz band, the minimum 6 dB bandwidth of U–NII devices shall be at least 500 kHz.

* * * * *

(j) All U–NII Devices must contain security features to protect against modification of software by unauthorized parties.

[FR Doc. 2013–08033 Filed 4–9–13; 8:45 am]

BILLING CODE 6712–01–P

FEDERAL COMMUNICATIONS COMMISSION

47 CFR Part 73

[MB Docket No. 13–316; RM–11693; DA 13–52]

Radio Broadcasting Services; Matagorda, TX

AGENCY: Federal Communications Commission.

ACTION: Proposed rule.

SUMMARY: In this document the Commission requests comment on a petition filed by Tejas Broadcasting Ltd., LLP (''Petitioner''), licensee of FM Station KMJR, Channel 252C2, Odem, Texas. Petitioner proposes to amend the FM Table of Allotments by substituting Channel 291A for vacant Channel 252A, at Matagorda. The proposal is part of a contingently filed ''hybrid'' application and rule making petition. Channel 291A can be allotted at Matagorda, Texas, in compliance with the Commission's minimum distance separation requirements, at city reference coordinates of 28–41–25 NL and 95–58–02 WL, without site restriction. Concurrence by the Government of Mexico is required because Matagorda, Texas, is located within 320 kilometers (199 miles) of the U.S.-Mexican border. *See* Supplementary Information *infra.*

DATES: Comments must be filed on or before April 22, 2013, and reply comments must be filed on or before May 7, 2013.

ADDRESSES: You may submit comments, identified by MB Docket No 13–52, by any of the following methods:

- *Federal Communications Commission's Web site: http://fjallfoss.fcc.gov/ecfs2/.* Follow the instructions for submitting comments.
- *People with disabilities:* Contact the FCC to request reasonable accommodations (accessible format documents, sign language interpreters, CART, etc.) by email: *FCC504@fcc.gov* or phone: 202–418–0530 or TTY: 202–418–0432.

For detailed instructions for submitting comments and additional information of the rulemaking process, see the **SUPPLEMENTARY INFORMATION** sections of this document. In addition to filing comments with the FCC, interested parties should serve counsel for petitioner as follows: Robert B. Jacobi, Esq., Cohn and Marks LLP, 1920 N Street NW., Suite 300, Washington, DC 20036.

FOR FURTHER INFORMATION CONTACT: Deborah A. Dupont, Media Bureau (202) 418–7072.

SUPPLEMENTARY INFORMATION: This is a synopsis of the Commission's *Notice of Proposed Rule Making,* MB Docket No. 13–52, adopted February 28, 2013, and released March 1, 2013. The full text of this Commission decision is available for inspection and copying during normal business hours in the FCC Reference Information Center (Room CY–A257), 445 12th Street SW., Washington, DC 20554. The complete text of this decision may also be purchased from the Commission's copy contractor, Best Copy and Printing, Inc., 445 12th Street SW., Room CY–B402, Washington, DC 20554, (800) 378–3160, or via the company's Web site, *www.bcpiweb.com.* This document does not contain proposed information collection requirements subject to the Paperwork Reduction Act of 1995, Public Law 104–13. In addition, therefore, it does not contain any proposed information collection burden ''for small business concerns with fewer than 25 employees,'' pursuant to the Small Business Paperwork Relief Act of 2002, Public Law 107–198, *see* 44 U.S.C. 3506(c)(4).

The Provisions of the Regulatory Flexibility Act of 1980 do not apply to this proceeding. Members of the public should note that from the time a Notice of Proposed Rule Making is issued until the matter is no longer subject to Commission consideration or court review, all *ex parte* contacts are prohibited in Commission proceedings, such as this one, which involve channel allotments. *See* 47 CFR 1.1204(b) for rules governing permissible *ex parte* contacts.

For information regarding proper filing procedures for comments, *see* 47 CFR 1.415 and 1.420.

List of Subjects in 47 CFR Part 73

Radio, Radio broadcasting.

Federal Communications Commission.

Nazifa Sawez,

Assistant Chief, Audio Division, Media Bureau.

For the reasons discussed in the preamble, the Federal Communications Commission proposes to amend 47 CFR Part 73 as follows:

PART 73—RADIO BROADCAST SERVICES

■ 1. The authority citation for part 73 continues to read as follows:

Authority: 47 U.S.C. 154, 303, 334, 336 and 339.

§ 73.202 [Amended]

■ 2. Section 73.202(b), the Table of FM Allotments under Texas, is amended by removing 252A and adding 291A at Matagorda.

[FR Doc. 2013–08282 Filed 4–9–13; 8:45 am]

BILLING CODE 6712–01–P

Notices

Federal Register

Vol. 78, No. 69

Wednesday, April 10, 2013

This section of the FEDERAL REGISTER contains documents other than rules or proposed rules that are applicable to the public. Notices of hearings and investigations, committee meetings, agency decisions and rulings, delegations of authority, filing of petitions and applications and agency statements of organization and functions are examples of documents appearing in this section.

DEPARTMENT OF AGRICULTURE

Agency Information Collection Activities; Revision and Extension of Approved Collection; Comment Request: Generic Clearance for the Collection of Qualitative Feedback on Agency Service Delivery

April 4, 2013.

AGENCY: Animal and Plant Health Inspection Service, Department of Agriculture.

ACTION: 30-Day notice of submission of information collection approval from the Office of Management and Budget and request for comments.

SUMMARY: As part of a Federal Government-wide effort to streamline the process to seek feedback from the public on service delivery, the Department of Agriculture (USDA), Animal and Plant Health Inspection Service (APHIS) has submitted a Generic Information Collection Request (Generic ICR): ''Generic Clearance for the Collection of Qualitative Feedback on Agency Service Delivery'' to OMB for approval under the Paperwork Reduction Act (PRA) (44 U.S.C. 3501 et. seq.).

DATES: Comments must be submitted May 10, 2013.

ADDRESSES: Written comments may be submitted to the Desk Officer for Agriculture, Office of Information and Regulatory Affairs, Office of Management and Budget, New Executive Office Building, Washington, DC 20503; *OIRA_Submission@OMB.EOP.GOV* or fax (202) 395–5806 and to Departmental Clearance Office, USDA, OCIO, Mail Stop 7602, Washington, DC 20250–7602.

FOR FURTHER INFORMATION CONTACT: To request additional information, please contact Ruth Brown (202) 720–8958 or Charlene Parker (202) 720–8681.

SUPPLEMENTARY INFORMATION:

Title: Generic Clearance for the Collection of Qualitative Feedback on Agency Service Delivery

Abstract: The information collection activity will garner qualitative customer and stakeholder feedback in an efficient, timely manner, in accordance with the Administration's commitment to improving service delivery. By qualitative feedback we mean information that provides useful insights on perceptions and opinions, but are not statistical surveys that yield quantitative results that can be generalized to the population of study. This feedback will provide insights into customer or stakeholder perceptions, experiences and expectations, provide an early warning of issues with service, or focus attention on areas where communication, training or changes in operations might improve delivery of products or services. These collections will allow for ongoing, collaborative and actionable communications between the Agency and its customers and stakeholders. It will also allow feedback to contribute directly to the improvement of program management.

Feedback collected under this generic clearance will provide useful information, but it will not yield data that can be generalized to the overall population. This type of generic clearance for qualitative information will not be used for quantitative information collections that are designed to yield reliably actionable results, such as monitoring trends over time or documenting program performance. Such data uses require more rigorous designs that address: the target population to which generalizations will be made, the sampling frame, the sample design (including stratification and clustering), the precision requirements or power calculations that justify the proposed sample size, the expected response rate, methods for assessing potential non-response bias, the protocols for data collection, and any testing procedures that were or will be undertaken prior fielding the study. Depending on the degree of influence the results are likely to have, such collections may still be eligible for submission for other generic mechanisms that are designed to yield quantitative results.

The Agency received no comments in response to the 60-day notice published in the **Federal Register** of August 9, 2012 (77 FR 47590).

Animal and Plant Health Inspection Service—0579–0377

Current Actions: Revision and Extension of Currently Approved Collection.

Type of Review: Revision and Extension.

Affected Public: Individuals and Households, Businesses and Organizations, State, Local or Tribal Government.

Average Expected Annual Number of activities: 29.

Respondents: 17,000.

Annual responses: 17,000.

Frequency of Response: Once per request.

Average minutes per response: 0.25.

Burden hours: 17,500.

An agency may not conduct or sponsor, and a person is not required to respond to, a collection of information unless it displays a currently valid Office of Management and Budget control number.

Ruth Brown,

Departmental Information Collection Clearance Officer.

[FR Doc. 2013–08240 Filed 4–9–13; 8:45 am]

BILLING CODE 3410–34–P

DEPARTMENT OF AGRICULTURE

Food Safety and Inspection Service

[Docket No. FSIS–2013–0015]

Notice of Request for Extension of a Currently Approved Information Collection (Registration Requirements)

AGENCY: Food Safety and Inspection Service, USDA.

ACTION: Notice and request for comments.

SUMMARY: In accordance with the Paperwork Reduction Act of 1995 and Office of Management and Budget (OMB) regulations, the Food Safety and Inspection Service (FSIS) is announcing its intention to request extension of an information collection for business registration requirements because the information collection approval is scheduled to expire on June 30, 2013.

DATES: Comments on this notice must be received on or before June 10, 2013.

ADDRESSES: FSIS invites interested persons to submit comments on this

notice. Comments may be submitted by one of the following methods:

• *Federal eRulemaking Portal:* This Web site provides the ability to type short comments directly into the comment field on this Web page or attach a file for lengthier comments. Go to *http://www.regulations.gov.* Follow the on-line instructions at that site for submitting comments.

• *Mail, including CD–ROMs, etc.:* Send to Docket Clerk, U.S. Department of Agriculture, Food Safety and Inspection Service, Patriots Plaza 3, 1400 Independence Avenue SW., Mailstop 3782, Room 8–163A, Washington, DC 20250–3700.

• *Hand- or courier-delivered submittals:* Deliver to Patriots Plaza 3, 355 E. Street SW., Room 8–163A, Washington, DC 20250–3700.

Instructions: All items submitted by mail or electronic mail must include the Agency name and docket number FSIS–2013–0015. Comments received in response to this docket will be made available for public inspection and posted without change, including any personal information, to *http://www.regulations.gov.*

Docket: For access to background documents or comments received, go to the FSIS Docket Room at Patriots Plaza 3, 355 E. Street, Room 8–164, Washington, DC 20250–3700 between 8:00 a.m. and 4:30 p.m., Monday through Friday.

FOR FURTHER INFORMATION CONTACT: John O'Connell, Paperwork Reduction Act Coordinator, Food Safety and Inspection Service, USDA, 1400 Independence Avenue SW., Room 6065, South Building, Washington, DC 20250; Telephone: (202) 720–0345.

SUPPLEMENTARY INFORMATION:

Title: Registration Requirements.

Type of Request: Extension of an approved information collection.

OMB Control Number: 0583–0128.

Expiration Date: 6/30/2013.

Abstract: FSIS has been delegated the authority to exercise the functions of the Secretary of Agriculture (7 CFR 2.18, 2.53) as specified in the Federal Meat Inspection Act (FMIA) (21 U.S.C. 601, *et seq.*) and the Poultry Products Inspection Act (PPIA) (21 U.S.C. 451, *et seq.*). FSIS protects the public by verifying that meat and poultry products are wholesome, not adulterated, and properly marked, labeled, and packaged.

FSIS is planning to request an extension of an approved information collection addressing paperwork requirements for business registration requirements because the OMB approval will expire on June 30, 2013. Provisions of the FMIA (21 U.S.C. 643) and the PPIA (21 U.S.C. 460 (c)) prohibit any person, firm, or corporation from engaging in commerce as a meat or poultry products broker; renderer; animal food manufacturer; wholesaler of livestock or poultry carcasses or parts; or public warehouseman storing such articles in or for commerce, or from engaging in the business of buying, selling, or transporting in commerce, or importing any dead, dying, or disabled or diseased livestock or poultry or parts of the carcasses of livestock or poultry that died otherwise than by slaughter, unless it has registered its business with FSIS as required by the regulations. An official establishment that conducts any of these activities does not have to register (9 CFR 320.5(c) and 381.179(c)). (An official establishment is a slaughtering, cutting, canning, or other food processing establishment where inspection is maintained under the meat and poultry regulations (9 CFR Subchapters A, D, and E).)

According to the regulations (9 CFR 320.5 and 381.179), parties required to register with FSIS must do so by submitting a form (FSIS Form 5020–1, Registration of Meat and Poultry Handlers) and must provide current and correct information to FSIS, including their name, the address of all locations at which they conduct the business that requires them to register, and all trade or business names under which they conduct these businesses. In addition, parties required to register with FSIS must do so within 90 days after they begin to engage in any of the businesses that require registration. They must also notify FSIS in writing when information on the form changes.

FSIS has made the following estimates based upon an information collection assessment:

Estimate of Burden: FSIS estimates that it will take respondents an average of 10 minutes to complete and submit this form to FSIS.

Respondents: Brokers, renderers, animal food manufacturers, wholesalers, public warehousemen, meat and poultry handlers.

Estimated No. of Respondents: 600.

Estimated No. of Annual Responses per Respondent: 1.

Estimated Total Annual Burden on Respondents: 100 hours.

Copies of this information collection assessment can be obtained from John O'Connell, Paperwork Reduction Act Coordinator, Food Safety and Inspection Service, USDA, 1400 Independence Avenue SW., Room 6065, South Building, Washington, DC 20250; Telephone: (202) 720–0345.

Comments are invited on: (a) Whether the proposed collection of information is necessary for the proper performance of FSIS's functions, including whether the information will have practical utility; (b) the accuracy of FSIS's estimate of the burden of the proposed collection of information, including the validity of the methodology and assumptions used; (c) ways to enhance the quality, utility, and clarity of the information to be collected; and (d) ways to minimize the burden of the collection of information, including through the use of appropriate automated, electronic, mechanical, or other technological collection techniques, or other forms of information technology. Comments may be sent both to FSIS, at the addresses provided above, and to the Desk Officer for Agriculture, Office of Information and Regulatory Affairs, Office of Management and Budget, Washington, DC 20253.

Responses to this notice will be summarized and included in the request for OMB approval. All comments will also become a matter of public record.

USDA Nondiscrimination Statement

The U.S. Department of Agriculture (USDA) prohibits discrimination in all its programs and activities on the basis of race, color, national origin, gender, religion, age, disability, political beliefs, sexual orientation, and marital or family status. (Not all prohibited bases apply to all programs.) Persons with disabilities who require alternative means for communication of program information (Braille, large print, audiotape, etc.) should contact USDA's Target Center at 202–720–2600 (voice and TTY).

To file a written complaint of discrimination, write USDA, Office of the Assistant Secretary for Civil Rights, 1400 Independence Avenue SW, Washington, DC 20250–9410 or call 202–720–5964 (voice and TTY). USDA is an equal opportunity provider and employer.

Additional Public Notification

FSIS will announce this notice online through the FSIS Web page located at *http://www.fsis.usda.gov/regulations_&_policies/Federal_Register_Notices/index.asp.*

FSIS will also make copies of this **Federal Register** publication available through the FSIS Constituent Update, which is used to provide information regarding FSIS policies, procedures, regulations, **Federal Register** notices, FSIS public meetings, and other types of information that could affect or would be of interest to constituents and stakeholders. The Update is communicated via Listserv, a free electronic mail subscription service for

industry, trade groups, consumer interest groups, health professionals, and other individuals who have asked to be included. The Update is also available on the FSIS Web page. In addition, FSIS offers an electronic mail subscription service which provides automatic and customized access to selected food safety news and information. This service is available at *http://www.fsis.usda.gov/News_&_Events/Email_Subscription/*. Options range from recalls to export information to regulations, directives and notices. Customers can add or delete subscriptions themselves, and have the option to password protect their accounts.

Done at Washington, DC on: April 5, 2013.

Alfred V. Almanza,

Administrator.

[FR Doc. 2013–08403 Filed 4–9–13; 8:45 am]

BILLING CODE 3410–DM–P

DEPARTMENT OF AGRICULTURE

Forest Service

Information Collection: Annual Wildfire Summary Report

AGENCY: Forest Service, USDA.

ACTION: Notice; request for comment.

SUMMARY: In accordance with the Paperwork Reduction Act of 1995, the Forest Service is seeking comments from all interested individuals and organizations on the extension of a currently approved information collection; Annual Wildfire Summary Report.

DATES: Comments must be received in writing on or before June 10, 2013 to be assured of consideration. Comments received after that date will be considered to the extent practicable.

ADDRESSES: Comments concerning this notice should be addressed to Tim Melchert, Fire and Aviation Management, National Interagency Fire Center, USDA Forest Service, 3833 S. Development Avenue, Boise, ID, 83705.

Comments also may be submitted via facsimile to 208–387–5375 or by email to: *tmelchert@fs.fed.us.*

The public may inspect comments received at National Interagency Fire Center, 3833 S. Development Avenue, Boise, ID 83705 during normal business hours. Visitors are encouraged to call ahead to 208–387–5604 to facilitate entry to the building.

FOR FURTHER INFORMATION CONTACT: Tim Melchert, Fire and Aviation Manager, National Interagency Fire Center, 208–387–5887.

Individuals who use TDD may call the Federal Relay Service (FRS) at 1–800–877–8339, 24 hours a day, every day of the year, including holidays.

SUPPLEMENTARY INFORMATION: *Title:* Annual Wildfire Summary Report.

OMB Number: 0596–0025.

Expiration Date of Approval: July 31, 2013.

Type of Request: Extension of a currently approved collection.

Abstract: The Cooperative Forestry Assistance Act of 1978 (16 U.S.C. 2101 (note) Sec. 10) requires the Forest Service to collect information about wildfire suppression efforts by state and local firefighting agencies in support of congressional funding requests for the Forest Service State and Private Forestry Cooperative Fire Program. The program provides supplemental funding for state and local firefighting agencies. The Forest Service works cooperatively with state and local firefighting agencies to support their fire suppression efforts.

State fire marshals and state forestry officials use form FS–3100–8 (Annual Wildfire Summary Report) to report information to the Forest Service regarding state and local wildfire suppression efforts. The Forest Service is unable to assess the effectiveness of the State and Private Forestry Cooperative Fire Program without this information. Forest Service managers evaluate the information to determine if the Cooperative Fire Program funds used by state and local fire agencies have improved fire suppression capabilities. The Forest Service shares the information with Congress as part of the annual request for funding for this program.

The information collected includes the number of fires responded to by state or local firefighting agencies within a fiscal year, as well as the following information pertaining to such fires:

- Fire type (timber, structural, or grassland);
- Size (in acres) of the fires;
- Cause of fires (lightning, campfires, arson, etc.); and
- Suppression costs associated with the fires.

The data gathered is not available from any other sources.

Estimate of Burden per Response: 30 minutes.

Type of Respondents: State fire marshals or State forestry officials.

Estimated Annual Number of Respondents: 56.

Estimated Annual Number of Responses per Respondent: 1.

Estimated Total Annual Burden on Respondents: 28 hours.

Comment is invited on: (1) Whether this collection of information is necessary for the stated purposes and the proper performance of the functions of the Agency, including whether the information will have practical or scientific utility; (2) the accuracy of the Agency's estimate of the burden of the collection of information, including the validity of the methodology and assumptions used; (3) ways to enhance the quality, utility, and clarity of the information to be collected; and (4) ways to minimize the burden of the collection of information on respondents, including the use of automated, electronic, mechanical, or other technological collection techniques or other forms of information technology.

All comments received in response to this notice, including names and addresses when provided, will be a matter of public record. Comments will be summarized and included in the request for Office of Management and Budget approval.

Dated: April 2, 2013.

Paul Reis,

Associate Deputy Chief, State & Private Forestry.

[FR Doc. 2013–08296 Filed 4–9–13; 8:45 am]

BILLING CODE 3410–11–P

DEPARTMENT OF AGRICULTURE

Forest Service

Media Outlets for Publication of Legal and Action Notices in the Southern Region

AGENCY: Forest Service, USDA.

ACTION: Notice.

SUMMARY: Deciding Officers in the Southern Region will publish notice of decisions subject to administrative appeal or objection under 36 CFR parts 215, 218 and 219 in the legal notice section of the newspapers listed in the **SUPPLEMENTARY INFORMATION** section of this notice. The Southern Region consists of Alabama, Kentucky, Georgia, Tennessee, Florida, Louisiana, Mississippi, Virginia, West Virginia, Arkansas, Oklahoma, North Carolina, South Carolina, Texas, Puerto Rico. As provided in 36 CFR part 215.5, 218.7 and Appendix A to 36 CFR 219.35 the public shall be advised through **Federal Register** notice, of the newspaper of record to be utilized for publishing legal notice of decisions. Newspaper publication of notice of decisions is in addition to direct notice of decisions to those who have requested it and to those who have participated in project

planning. Responsible Officials in the Southern Region will also publish notice of proposed actions under 36 CFR part 215.5 and 218.24 in the newspapers that are listed in the **SUPPLEMENTARY INFORMATION** section of this notice. As provided in 36 CFR part 215.5, the public shall be advised, through **Federal Register** notice, of the newspaper of record to be utilized for publishing notices on proposed actions. Additionally, the Deciding Officers in the Southern Region will publish notice of the opportunity to object to a proposed authorized hazardous fuel reduction project under 36 CFR part 218.32 or developing, amending or revising land management plans under 36 CFR 219 in the legal notice section of the newspapers listed in the **SUPPLEMENTARY INFORMATION** section of this notice.

DATES: Use of these newspapers for purposes of publishing legal notice of decisions subject to appeal under 36 CFR 215 and Appendix A to 36 CFR 219.35, notices of proposed actions under 36 CFR part 215, and notices of the opportunity to object under 36 CFR 218 and 36 CFR 219 shall begin the first day after the date of this publication.

FOR FURTHER INFORMATION CONTACT: James W. Bennett, Regional Appeal Coordinator, Southern Region, Planning, 1720 Peachtree Road, NW., Atlanta, Georgia 30309, Phone: 404/347–2788.

SUPPLEMENTARY INFORMATION: Deciding Officers in the Southern Region will give legal notice of decisions subject to appeal under Appendix A to 36 CFR 219.35, the Responsible Officials in the Southern Region will give notice of decisions subject to appeal under 36 CFR part 215 and opportunity to object to a proposed authorized hazardous fuel reduction project under 36 CFR part 218 or developing, amending or revising land management plans under 36 CFR 219 in the following newspapers which are listed by Forest Service administrative unit. Responsible Officials in the Southern Region will also give notice of proposed actions under 36 CFR part 215.5 in the following newspapers of record which are listed by Forest Service administrative unit. The timeframe for comment on a proposed action shall be based on the date of publication of the notice of the proposed action in the newspaper of record. The timeframe for appeal shall be based on the date of publication of the legal notice of the decision in the newspaper of record for 36 CFR 215 and Appendix A to 36 CFR 219.35. The timeframe for an objection shall be based on the date of publication of the legal notice of the opportunity to object for projects subject to 36 CFR part 218 or 36 CFR part 219.

Where more than one newspaper is listed for any unit, the first newspaper listed is the newspaper of record that will be utilized for publishing the legal notice of decisions and calculating timeframes. Secondary newspapers listed for a particular unit are those newspapers the Deciding Officer/Responsible Official expects to use for purposes of providing additional notice.

The following newspapers will be used to provide notice.

Southern Region

Regional Forester Decisions:

Affecting National Forest System lands in more than one Administrative unit of the 15 in the Southern Region, *Atlanta Journal-Constitution,* published daily in Atlanta, GA. Affecting National Forest System lands in only one Administrative unit or only one Ranger District will appear in the newspaper of record elected by the National Forest, National Grassland, National Recreation Area, or Ranger District as listed below.

National Forests in Alabama, Alabama

Forest Supervisor Decisions:

Affecting National Forest System lands in more than one Ranger District of the 6 in the National Forests in Alabama, *Montgomery Advertiser,* published daily in Montgomery, AL. Affecting National Forest System lands in only one Ranger District will appear in the newspaper of record elected by the Ranger District as listed below.

District Ranger Decisions:

Bankhead Ranger District: *Northwest Alabamian,* published bi-weekly (Wednesday & Saturday) in Haleyville, AL

Conecuh Ranger District: *The Andalusia Star News,* published daily (Tuesday through Saturday) in Andalusia, AL

Oakmulgee Ranger District: *The Tuscaloosa News,* published daily in Tuscaloosa, AL

Shoal Creek Ranger District: *The Anniston Star,* published daily in Anniston, AL

Talladega Ranger District: *The Daily Home,* published daily in Talladega, AL

Tuskegee Ranger District: *Tuskegee News,* published weekly (Thursday) in Tuskegee, AL

Chattahoochee-Oconee National Forest, Georgia

Forest Supervisor Decisions:

The Times, published daily in Gainesville, GA

District Ranger Decisions:

Blue Ridge Ranger District: *The News Observer* (newspaper of record) published bi-weekly (Tuesday & Friday) in Blue Ridge, GA

North Georgia News, (newspaper of record) published weekly (Wednesday) in Blairsville, GA

The Dahlonega Nuggett, (secondary) published weekly (Wednesday) in Dahlonega, GA

Towns County Herald, (secondary) published weekly (Thursday) in Hiawassee, GA

Conasauga Ranger District: *Daily Citizen,* published daily in Dalton, GA

Chattooga River Ranger District: *The Northeast Georgian,* (newspaper of record) published bi-weekly (Tuesday & Friday) in Cornelia, GA

Clayton Tribune, (newspaper of record) published weekly (Thursday) in Clayton, GA

The Toccoa Record, (secondary) published weekly (Thursday) in Toccoa, GA

White County News, (secondary) published weekly (Thursday) in Cleveland, GA

Oconee Ranger District: *Eatonton Messenger,* published weekly (Thursday) in Eatonton, GA

Cherokee National Forest, Tennessee

Forest Supervisor Decisions:

Knoxville News Sentinel, published daily in Knoxville, TN

District Ranger Decisions:

Unaka Ranger District: *Greeneville Sun,* published daily (except Sunday) in Greeneville, TN

Ocoee-Hiwassee Ranger District: *Polk County News,* published weekly (Wednesday) in Benton, TN

Tellico Ranger District: *Monroe County Advocate & Democrat,* published tri-weekly (Wednesday, Friday, and Sunday) in Sweetwater, TN

Watauga Ranger District: *Johnson City Press,* published daily in Johnson City, TN

Daniel Boone National Forest, Kentucky

Forest Supervisor Decisions:

Lexington Herald-Leader, published daily in Lexington, KY

District Ranger Decisions:

Cumberland Ranger District: *The Morehead News,* published bi-weekly (Tuesday and Friday) in Morehead, KY London Ranger District: *The Sentinel-Echo,* published tri-weekly (Monday, Wednesday, and Friday) in London, KY

Redbird Ranger District: *Manchester Enterprise,* published weekly (Thursday) in Manchester, KY

Stearns Ranger District: *McCreary County Record,* published weekly (Tuesday) in Whitley City, KY

El Yunque National Forest, Puerto Rico

Forest Supervisor Decisions:

El Nuevo Dia, published daily in Spanish in San Juan, PR

Puerto Rico Daily Sun, published daily in English in San Juan, PR

National Forests in Florida, Florida

Forest Supervisor Decisions:

The Tallahassee Democrat, published daily in Tallahassee, FL

District Ranger Decisions:

Apalachicola Ranger District: *Calhoun-Liberty Journal,* published weekly (Wednesday) in Bristol, FL

Lake George Ranger District: *The Ocala Star Banner,* published daily in Ocala, FL

Osceola Ranger District: *The Lake City Reporter,* published daily (Monday–Saturday) in Lake City, FL

Seminole Ranger District: *The Daily Commercial,* published daily in Leesburg, FL

Wakulla Ranger District: *The Tallahassee Democrat,* published daily in Tallahassee, FL

Francis Marion & Sumter National Forests, South Carolina

Forest Supervisor Decisions:

The State, published daily in Columbia, SC

District Ranger Decisions:

Andrew Pickens Ranger District: *The Daily Journal,* published daily (Tuesday through Saturday) in Seneca, SC

Enoree Ranger District: *Newberry Observer,* published tri-weekly (Monday, Wednesday, and Friday) in Newberry, SC

Long Cane Ranger District: *Index-Journal,* published daily in Greenwood, SC

Wambaw Ranger District: *Post and Courier,* published daily in Charleston, SC

Witherbee Ranger District: *Post and Courier,* published daily in Charleston, SC

George Washington and Jefferson National Forests, Virginia and West Virginia

Forest Supervisor Decisions:

Roanoke Times, published daily in Roanoke, VA

District Ranger Decisions:

Clinch Ranger District: *Coalfield Progress,* published bi-weekly (Tuesday and Friday) in Norton, VA

North River Ranger District: *Daily News Record,* published daily (except Sunday) in Harrisonburg, VA

Glenwood-Pedlar Ranger District: *Roanoke Times,* published daily in Roanoke, VA

James River Ranger District: *Virginian Review,* published daily (except Sunday) in Covington, VA

Lee Ranger District: *Shenandoah Valley Herald,* published weekly (Wednesday) in Woodstock, VA

Mount Rogers National Recreation Area: *Bristol Herald Courier,* published daily in Bristol, VA

Eastern Divide Ranger District: *Roanoke Times,* published daily in Roanoke, VA

Warm Springs Ranger District: *The Recorder,* published weekly (Thursday) in Monterey, VA

Kisatchie National Forest, Louisiana

Forest Supervisor Decisions:

The Town Talk, published daily in Alexandria, LA

District Ranger Decisions:

Calcasieu Ranger District: *The Town Talk,* (newspaper of record) published daily in Alexandria, LA

The Leesville Daily Leader, (secondary) published daily in Leesville, LA

Caney Ranger District: *Minden Press Herald,* (newspaper of record) published daily in Minden, LA

Homer Guardian Journal, (secondary) published weekly (Wednesday) in Homer, LA

Catahoula Ranger District: *The Town Talk,* published daily in Alexandria, LA

Kisatchie Ranger District: *Natchitoches Times,* published daily (Tuesday thru Friday and on Sunday) in Natchitoches, LA

Winn Ranger District: *Winn Parish Enterprise,* published weekly (Wednesday) in Winnfield, LA

Land Between The Lakes National Recreation Area, Kentucky and Tennessee

Area Supervisor Decisions:

The Paducah Sun, published daily in Paducah, KY

National Forests in Mississippi, Mississippi

Forest Supervisor Decisions:

Clarion-Ledger, published daily in Jackson, MS

District Ranger Decisions:

Bienville Ranger District: *Clarion-Ledger,* published daily in Jackson, MS

Chickasawhay Ranger District: *Clarion-Ledger,* published daily in Jackson, MS

Delta Ranger District: *Clarion-Ledger,* published daily in Jackson, MS

De Soto Ranger District: *Clarion Ledger,* published daily in Jackson, MS

Holly Springs Ranger District: *Clarion-Ledger,* published daily in Jackson, MS

Homochitto Ranger District: *Clarion-Ledger,* published daily in Jackson, MS

Tombigbee Ranger District: *Clarion-Ledger,* published daily in Jackson, MS

National Forests in North Carolina, North Carolina

Forest Supervisor Decisions:

The Asheville Citizen-Times, published Wednesday thru Sunday, in Asheville, NC

District Ranger Decisions:

Appalachian Ranger District: *The Asheville Citizen-Times,* published Wednesday thru Sunday, in Asheville, NC

Cheoah Ranger District: *Graham Star,* published weekly (Thursday) in Robbinsville, NC

Croatan Ranger District: *The Sun Journal,* published daily in New Bern, NC

Grandfather Ranger District: *McDowell News,* published daily in Marion, NC

Nantahala Ranger District: *The Franklin Press,* published bi-weekly (Tuesday and Friday) in Franklin, NC

Pisgah Ranger District: *The Asheville Citizen-Times,* published Wednesday thru Sunday, in Asheville, NC

Tusquitee Ranger District: *Cherokee Scout,* published weekly (Wednesday) in Murphy, NC

Uwharrie Ranger District: *Montgomery Herald,* published weekly (Wednesday) in Troy, NC

Ouachita National Forest, Arkansas and Oklahoma

Forest Supervisor Decisions:

Arkansas Democrat-Gazette, published daily in Little Rock, AR

District Ranger Decisions:

Caddo-Womble Ranger District: *Arkansas Democrat-Gazette,* published daily in Little Rock, AR

Jessieville-Winona-Fourche Ranger District: *Arkansas Democrat-Gazette,* published daily in Little Rock, AR

Mena-Oden Ranger District: *Arkansas Democrat-Gazette,* published daily in Little Rock, AR

Oklahoma Ranger District (Choctaw; Kiamichi; and Tiak): *McCurtain Daily Gazette,* published daily in Idabel, OK

Poteau-Cold Springs Ranger District: *Arkansas Democrat-Gazette,* published daily in Little Rock, AR

Ozark-St. Francis National Forests, Arkansas

Forest Supervisor Decisions:

The Courier, published daily (Tuesday through Sunday) in Russellville, AR

District Ranger Decisions:

Bayou Ranger District: *The Courier,* published daily (Tuesday through Sunday) in Russellville, AR
Boston Mountain Ranger District: *Southwest Times Record,* published daily in Fort Smith, AR
Buffalo Ranger District: *The Courier,* published daily (Tuesday through Sunday) in Russellville, AR
Magazine Ranger District: *Southwest Times Record,* published daily in Fort Smith, AR
Pleasant Hill Ranger District: *Johnson County Graphic,* published weekly (Wednesday) in Clarksville, AR
St. Francis National Forest: *The Daily World,* published daily (Sunday through Friday) in Helena, AR
Sylamore Ranger District: *Stone County Leader,* published weekly (Wednesday) in Mountain View, AR

National Forests and Grasslands in Texas, Texas

Forest Supervisor Decisions:
The Lufkin Daily News, published daily in Lufkin, TX

District Ranger Decisions:
Angelina National Forest: *The Lufkin Daily News,* published daily in Lufkin, TX
Caddo & LBJ National Grasslands: *Denton Record-Chronicle,* published daily in Denton, TX
Davy Crockett National Forest: *The Lufkin Daily News,* published daily in Lufkin, TX
Sabine National Forest: *The Lufkin Daily News,* published daily in Lufkin, TX
Sam Houston National Forest: *The Courier,* published daily in Conroe, TX

Dated: April 3, 2013.

Jerome Thomas,

Deputy Regional Forester.

[FR Doc. 2013–08345 Filed 4–9–13; 8:45 am]

BILLING CODE 3410–11–P

DEPARTMENT OF AGRICULTURE

Forest Service

New Ski Area Water Rights Clause

AGENCY: Forest Service, USDA.

ACTION: Notice of meeting; request for public input.

SUMMARY: There will be three open houses, one in Denver, Colorado; one in Salt Lake City, Utah; and one in Lake Tahoe, California, to provide initial public input on a new water rights clause for ski area permits issued by the Forest Service. There will be several stations at the open houses that will remain open from 4:00 p.m. to 6:30 p.m.; there will be no presentations by the Forest Service. The open houses will allow the public to provide comments and suggestions that the Forest Service will consider in developing a new ski area water rights clause. There will be another opportunity for the public to comment when the proposed clause is published in the **Federal Register** for public notice and comment.

DATES: The open houses will be held in Denver, Colorado, on April 16, 2013, from 4:00 p.m. to 6:30 p.m.; in Salt Lake City, Utah, on April 17, 2013, from 4:00 p.m. to 6:30 p.m.; and in Lake Tahoe, California, on April 18, 2013, from 4:00 p.m. to 6:30 p.m.

ADDRESSES: The open houses will be held at the offices of the U.S. Fish and Wildlife Service, 134 Union Boulevard, first floor conference room, in Lakewood, Colorado, on April 16, 2013; at the offices of the Utah Department of Natural Resources, 1594 West North Temple, Suite 3710, in Salt Lake City, Utah, on April 17, 2013; and the offices of the Forest Service's Lake Tahoe Basin Management Unit, 35 College Drive, in South Lake Tahoe, California, on April 18, 2013.

FOR FURTHER INFORMATION CONTACT: Loren Kroenke, Winter Sports Program Manager, Recreation, Heritage, and Volunteer Resources Staff, at 801–975–3793. Individuals who use telecommunication devices for the deaf may call the Federal Information Relay Service at 800–877–8339 between 8:00 a.m. and 8:00 p.m., Eastern Daylight Time, Monday through Friday.

Dated: April 4, 2013.

Leslie A. C. Weldon,

Deputy Chief, National Forest System.

[FR Doc. 2013–08391 Filed 4–9–13; 8:45 am]

BILLING CODE 3410–11–P

COMMISSION ON CIVIL RIGHTS

Sunshine Act Meeting

AGENCY: United States Commission on Civil Rights.

ACTION: Notice of Briefing and Business Meeting.

DATE AND TIME: Friday, April 19, 2013; 9:30 a.m. EST.

PLACE: 1331 Pennsylvania Ave NW., Suite 1150, Washington, DC 20425.

Briefing Agenda—9:30 a.m.–11:15 a.m.

This briefing is open to the public.
Topic: *Increasing Compliance with Section 7 of the NVRA.*

I. Introductory Remarks by Chairman
II. Panel Discussion—State Government Officials & Litigators Speakers' Remarks and Questions from Commissioners
III. Adjourn Briefing

Meeting Agenda—11:15 a.m.

I. Approval of Agenda
II. Office of General Counsel—Training on Online Filing of OGE Form 278
III. Program Planning
- Update on the Sex Trafficking: A Gender-Based Violation of Civil Rights briefing
- Update on the Federal Civil Rights Engagement with Arab & Muslim Communities Post 9/11 briefing
- Update on the Assessing the Impact of Criminal Background Checks and the Equal Employment Opportunity Commission's Conviction Records Policy on the Employment of Black and Hispanic Workers briefing
- Update on the Regulatory and Other Barriers to Entrepreneurship that Impede Business Start-Ups Briefing
- Update on the Reconciling Non-Discrimination Principles with Civil Liberties briefing
- Update on the Adequate Protection of the Civil Rights of Veterans and Service Members Briefing

IV. Management and Operations
- Consideration of Changes to Business Meeting Calendar for August and September 2013
- Discussion re: the Chief of RPCU position
- Discussion re: delegation of authority to the Chief of the RPCU to approve SAC project proposals
- Update on Budget and Personnel issues from the Office of Management & Budget

V. Approval of State Advisory Committee Appointment Slates
- Illinois
- Mississippi
- New Jersey
- South Dakota
- Utah

VI. Adjourn Meeting

CONTACT PERSON FOR FURTHER INFORMATION: Lenore Ostrowsky, Acting Chief, Public Affairs Unit (202) 376–8591.

Hearing-impaired persons who will attend the meeting and require the services of a sign language interpreter should contact Pamela Dunston at (202) 376–8105 or at *signlanguage@usccr.gov* at least seven business days before the scheduled date of the meeting.

Dated: April 8, 2013.

TinaLouise Martin,

Director of Management/Human Resources.

[FR Doc. 2013–08533 Filed 4–8–13; 4:15 pm]

BILLING CODE 6335–01–P

DEPARTMENT OF COMMERCE

Foreign-Trade Zones Board

[Order No. 1894]

Grant of Authority for Subzone Status, Hemlock Semiconductor Corporation, (Polysilicon), Hemlock, Michigan

Pursuant to its authority under the Foreign-Trade Zones Act of June 18, 1934, as amended (19 U.S.C. 81a–81u), the Foreign-Trade Zones Board (the Board) adopts the following Order:

Whereas, the Foreign-Trade Zones Act provides for ''* * * the establishment * * * of foreign-trade zones in ports of entry of the United States, to expedite and encourage foreign commerce, and for other purposes,'' and authorizes the Foreign-Trade Zones Board to grant to qualified corporations the privilege of establishing foreign-trade zones in or adjacent to U.S. Customs and Border Protection ports of entry;

Whereas, the Board's regulations (15 CFR part 400) provide for the establishment of special-purpose subzones when existing zone facilities cannot serve the specific use involved, and when the activity results in a significant public benefit and is in the public interest;

Whereas, the City of Flint, grantee of Foreign-Trade Zone 140, has made application to the Board for authority to establish a special-purpose subzone with certain manufacturing authority at the polysilicon manufacturing facility of Hemlock Semiconductor Corporation, located in Hemlock, Michigan (FTZ Docket 61–2011, filed 10–5–2011);

Whereas, notice inviting public comment has been given in the **Federal Register** (76 FR 63282, 10–12–2011; 76 FR 76934, 12–9–2011; 76 FR 81475, 12–28–2011; 77 FR 21082, 4–9–2012; 77 FR 30500, 5–23–2012) and the application has been processed pursuant to the FTZ Act and the Board's regulations; and

Whereas, the Board adopts the findings and recommendations of the examiner's report, and finds that the requirements of the FTZ Act and the Board's regulations would be satisfied, and that the proposal would be in the public interest if subject to the restriction and condition below;

Now, therefore, the Board hereby grants authority for subzone status for activity related to the manufacturing of polysilicon at the facility of Hemlock Semiconductor Corporation, located in Hemlock, Michigan (Subzone 140C), as described in the application and **Federal Register** notice, subject to the FTZ Act and the Board's regulations, including Section 400.13, and further subject to a restriction prohibiting admission of foreign status silicon metal subject to an antidumping or countervailing duty order and to a condition that the company shall submit supplemental reporting data, as specified by the Executive Secretary, for the purpose of monitoring by the FTZ staff.

Signed at Washington, DC, this 2nd day of April 2013.

Paul Piquado,

Assistant Secretary of Commerce for Import Administration, Alternate Chairman, Foreign-Trade Zones Board.

Attest:

Andrew McGilvray,

Executive Secretary.

[FR Doc. 2013–08230 Filed 4–9–13; 8:45 am]

BILLING CODE 3510–DS–P

DEPARTMENT OF COMMERCE

Bureau of Industry and Security

In the Matter of: Andro Telemi, a/k/a Andre Telimi, a/k/a Andre Telemi; 8868 Bluffdale Drive, La Tuna Canyon, CA 91352; Order Denying Export Privileges

On November 30, 2012, in the U.S. District Court, Northern District of Illinois, Andro Telemi, a/k/a Andre Telimi, a/k/a Telemi (''Telemi'') was convicted of violating Section 38 of the Arms Export Control Act (22 U.S.C. 2778 (2006 & Supp. IV 2010)) (''AECA''). Specifically, Telemi was convicted of knowingly and willfully attempting to export from the United States to Iran, defense articles designated on the United States Munitions List, namely, 10 connector adapters, without first having obtained the required license or other approval for such export. Telemi was sentenced to five years of probation with the first six months served under home confinement, 500 hours of community service, a fine of $10,000 and a $100 assessment. Telemi is also listed on the U.S. Department of State Debarred List.

Section 766.25 of the Export Administration Regulations (''EAR'' or ''Regulations'') [1] provides, in pertinent part, that ''[t]he Director of the Office of Exporter Services, in consultation with the Director of the Office of Export Enforcement, may deny the export privileges of any person who has been convicted of a violation of the Export Administration Act (''EAA''), the EAR, or any order, license or authorization issued thereunder; any regulation, license, or order issued under the International Emergency Economic Powers Act (50 U.S.C. 1701–1706); 18 U.S.C. 793, 794 or 798; section 4(b) of the Internal Security Act of 1950 (50 U.S.C. 783(b)), or section 38 of the Arms Export Control Act (22 U.S.C. 2778).'' 15 CFR 766.25(a); *see also* Section 11(h) of the EAA, 50 U.S.C. app. 2410(h). The denial of export privileges under this provision may be for a period of up to 10 years from the date of the conviction. 15 CFR 766.25(d); *see also* 50 U.S.C. app. 2410(h). In addition, Section 750.8 of the Regulations states that the Bureau of Industry and Security's Office of Exporter Services may revoke any Bureau of Industry and Security (''BIS'') licenses previously issued in which the person had an interest in at the time of his conviction.

I have received notice of Telemi's conviction for violating the AECA, and have provided notice and an opportunity for Telemi to make a written submission to BIS, as provided in Section 766.25 of the Regulations. I have not received a submission from Telemi. Based upon my review and consultations with BIS's Office of Export Enforcement, including its Director, and the facts available to BIS, I have decided to deny Telemi's export privileges under the Regulations for a period of 10 years from the date of Telemi's conviction. I have also decided to revoke all licenses issued pursuant to the Act or Regulations in which Telemi had an interest at the time of his conviction.

Accordingly, it is hereby *ordered:*

I. Until November 30, 2022, Andro Telemi, a/k/a Andre Telimi, a/k/a Andre Telemi (''Telemi'') with a last known address at: 8868 Bluffdale Drive, La Tuna Canyon, CA 91352, and when acting for or on behalf of Telemi, his representatives, assigns, agents or employees (the ''Denied Person''), may not, directly or indirectly, participate in any way in any transaction involving any commodity, software or technology (hereinafter collectively referred to as ''item'') exported or to be exported from the United States that is subject to the Regulations, including, but not limited to:

A. Applying for, obtaining, or using any license, License Exception, or export control document;

[1] The Regulations are currently codified in the Code of Federal Regulations at 15 CFR parts 730–774 (2012). The Regulations issued pursuant to the Export Administration Act (50 U.S.C. app. §§ 2401–2420 (2000)) (''EAA''). Since August 21, 2001, the EAA has been in lapse and the President, through Executive Order 13222 of August 17, 2001 (3 CFR, 2001 Comp. 783 (2002)), which has been extended by successive Presidential Notices, the most recent being that of August 15, 2012 (77 FR 49699 (August 16, 2012)), has continued the Regulations in effect under the International Emergency Economic Powers Act (50 U.S.C. 1701, *et seq.* (2006 & Supp. IV 2010)).

B. Carrying on negotiations concerning, or ordering, buying, receiving, using, selling, delivering, storing, disposing of, forwarding, transporting, financing, or otherwise servicing in any way, any transaction involving any item exported or to be exported from the United States that is subject to the Regulations, or in any other activity subject to the Regulations; or

C. Benefitting in any way from any transaction involving any item exported or to be exported from the United States that is subject to the Regulations, or in any other activity subject to the Regulations.

II. No person may, directly or indirectly, do any of the following:

A. Export or reexport to or on behalf of the Denied Person any item subject to the Regulations;

B. Take any action that facilitates the acquisition or attempted acquisition by the Denied Person of the ownership, possession, or control of any item subject to the Regulations that has been or will be exported from the United States, including financing or other support activities related to a transaction whereby the Denied Person acquires or attempts to acquire such ownership, possession or control;

C. Take any action to acquire from or to facilitate the acquisition or attempted acquisition from the Denied Person of any item subject to the Regulations that has been exported from the United States;

D. Obtain from the Denied Person in the United States any item subject to the Regulations with knowledge or reason to know that the item will be, or is intended to be, exported from the United States; or

E. Engage in any transaction to service any item subject to the Regulations that has been or will be exported from the United States and which is owned, possessed or controlled by the Denied Person, or service any item, of whatever origin, that is owned, possessed or controlled by the Denied Person if such service involves the use of any item subject to the Regulations that has been or will be exported from the United States. For purposes of this paragraph, servicing means installation, maintenance, repair, modification or testing.

III. After notice and opportunity for comment as provided in Section 766.23 of the Regulations, any other person, firm, corporation, or business organization related to Telemi by affiliation, ownership, control or position of responsibility in the conduct of trade or related services may also be subject to the provisions of this Order if necessary to prevent evasion of the Order.

IV. This Order does not prohibit any export, reexport, or other transaction subject to the Regulations where the only items involved that are subject to the Regulations are the foreign-produced direct product of U.S.-origin technology.

V. This Order is effective immediately and shall remain in effect until November 30, 2022.

VI. In accordance with Part 756 of the Regulations, Telemi may file an appeal of this Order with the Under Secretary of Commerce for Industry and Security. The appeal must be filed within 45 days from the date of this Order and must comply with the provisions of Part 756 of the Regulations.

VII. A copy of this Order shall be delivered to the Telemi. This Order shall be published in the **Federal Register**.

Issued this 2nd day of April 2013.

Bernard Kritzer,

Director, Office of Exporter Services.

[FR Doc. 2013–08274 Filed 4–9–13; 8:45 am]

BILLING CODE P

DEPARTMENT OF COMMERCE

Bureau of Industry and Security

In the Matter of: Liem Duc Huynh, a/k/a Duc Huynh, 2905 South Elm, Broken Arrow, OK 74012; Order Denying Export Privileges

On April 17, 2012, in the U.S. District Court, Central District of California, Liem Duc Huynh (''Huynh'') was convicted of violating Section 38 of the Arms Export Control Act (22 U.S.C. 2778 (2006 & Supp. IV 2010)) (''AECA''). Specifically, Huynh was convicted of aiding and abetting and willfully exporting Generation 3 Night Vision Goggles, defense articles listed on the United States Munitions List, from the United States to Vietnam, without first obtaining from the U.S. Department of State a license or written authorization for such export. Huynh was sentenced to one day of prison, (credit for time served), followed by three years of supervised release and a $1,500 fine. Huynh is also listed on the U.S. Department of State Debarred List.

Section 766.25 of the Export Administration Regulations (''EAR'' or ''Regulations'') [1] provides, in pertinent part, that ''[t]he Director of the Office of Exporter Services, in consultation with the Director of the Office of Export Enforcement, may deny the export privileges of any person who has been convicted of a violation of the Export Administration Act (''EAA''), the EAR, or any order, license or authorization issued thereunder; any regulation, license, or order issued under the International Emergency Economic Powers Act (50 U.S.C. 1701–1706); 18 U.S.C. 793, 794 or 798; section 4(b) of the Internal Security Act of 1950 (50 U.S.C. 783(b)), or section 38 of the Arms Export Control Act (22 U.S.C. 2778).'' 15 CFR 766.25(a); *see also* Section 11(h) of the EAA, 50 U.S.C. app. § 2410(h). The denial of export privileges under this provision may be for a period of up to 10 years from the date of the conviction. 15 CFR 766.25(d); *see also* 50 U.S.C. app. § 2410(h). In addition, Section 750.8 of the Regulations states that the Bureau of Industry and Security's Office of Exporter Services may revoke any Bureau of Industry and Security (''BIS'') licenses previously issued in which the person had an interest in at the time of his conviction.

I have received notice of Huynh's conviction for violating the AECA, and have provided notice and an opportunity for Huynh to make a written submission to BIS, as provided in Section 766.25 of the Regulations. I have not received a submission from Huynh. Based upon my review and consultations with BIS's Office of Export Enforcement, including its Director, and the facts available to BIS, I have decided to deny Huynh's export privileges under the Regulations for a period of 10 years from the date of Huynh's conviction. I have also decided to revoke all licenses issued pursuant to the Act or Regulations in which Huynh had an interest at the time of his conviction.

Accordingly, *it is hereby*

Ordered

I. Until April 17, 2022, Liem Duc Huynh (''Huynh''), with a last known address at: 2905 South Elm, Broken Arrow, OK 74012, and when acting for or on behalf of Huynh, his representatives, assigns, agents or employees (the ''Denied Person''), may not, directly or indirectly, participate in any way in any transaction involving any commodity, software or technology

[1] The Regulations are currently codified in the Code of Federal Regulations at 15 CFR parts 730–774 (2012). The Regulations issued pursuant to the Export Administration Act (50 U.S.C. app. §§ 2401–2420 (2000)) (''EAA''). Since August 21, 2001, the EAA has been in lapse and the President, through Executive Order 13222 of August 17, 2001 (3 CFR, 2001 Comp. 783 (2002)), which has been extended by successive Presidential Notices, the most recent being that of August 15, 2012 (77 Fed. Reg. 49699 (August 16, 2012)), has continued the Regulations in effect under the International Emergency Economic Powers Act (50 U.S.C. 1701, *et seq.* (2006 & Supp. IV 2010)).

(hereinafter collectively referred to as ''item'') exported or to be exported from the United States that is subject to the Regulations, including, but not limited to:

A. Applying for, obtaining, or using any license, License Exception, or export control document;

B. Carrying on negotiations concerning, or ordering, buying, receiving, using, selling, delivering, storing, disposing of, forwarding, transporting, financing, or otherwise servicing in any way, any transaction involving any item exported or to be exported from the United States that is subject to the Regulations, or in any other activity subject to the Regulations; or

C. Benefitting in any way from any transaction involving any item exported or to be exported from the United States that is subject to the Regulations, or in any other activity subject to the Regulations.

II. No person may, directly or indirectly, do any of the following:

A. Export or reexport to or on behalf of the Denied Person any item subject to the Regulations;

B. Take any action that facilitates the acquisition or attempted acquisition by the Denied Person of the ownership, possession, or control of any item subject to the Regulations that has been or will be exported from the United States, including financing or other support activities related to a transaction whereby the Denied Person acquires or attempts to acquire such ownership, possession or control;

C. Take any action to acquire from or to facilitate the acquisition or attempted acquisition from the Denied Person of any item subject to the Regulations that has been exported from the United States;

D. Obtain from the Denied Person in the United States any item subject to the Regulations with knowledge or reason to know that the item will be, or is intended to be, exported from the United States; or

E. Engage in any transaction to service any item subject to the Regulations that has been or will be exported from the United States and which is owned, possessed or controlled by the Denied Person, or service any item, of whatever origin, that is owned, possessed or controlled by the Denied Person if such service involves the use of any item subject to the Regulations that has been or will be exported from the United States. For purposes of this paragraph, servicing means installation, maintenance, repair, modification or testing.

III. After notice and opportunity for comment as provided in Section 766.23 of the Regulations, any other person, firm, corporation, or business organization related to Huynh by affiliation, ownership, control or position of responsibility in the conduct of trade or related services may also be subject to the provisions of this Order if necessary to prevent evasion of the Order.

IV. This Order does not prohibit any export, reexport, or other transaction subject to the Regulations where the only items involved that are subject to the Regulations are the foreign-produced direct product of U.S.-origin technology.

V. This Order is effective immediately and shall remain in effect until April 17, 2022.

VI. In accordance with Part 756 of the Regulations, Huynh may file an appeal of this Order with the Under Secretary of Commerce for Industry and Security. The appeal must be filed within 45 days from the date of this Order and must comply with the provisions of Part 756 of the Regulations.

VII. A copy of this Order shall be delivered to the Huynh. This Order shall be published in the **Federal Register**.

Issued this 2nd day of April 2013.

Bernard Kritzer,

Director, Office of Exporter Services.

[FR Doc. 2013–08272 Filed 4–9–13; 8:45 am]

BILLING CODE P

DEPARTMENT OF COMMERCE

Bureau of Industry and Security

Emerging Technology and Research Advisory Committee; Notice of Partially Closed Meeting

The Emerging Technology and Research Advisory Committee (ETRAC) will meet on April 25 and 26, 2013, 8:30 a.m., Room 3884, at the Herbert C. Hoover Building, 14th Street between Pennsylvania and Constitution Avenues NW., Washington, DC. The Committee advises the Office of the Assistant Secretary for Export Administration on emerging technology and research activities, including those related to deemed exports.

Agenda

Thursday, April 25

Open Session: 8:30 a.m.–11:30 a.m.

1. Opening Remarks.
2. Panel Discussion on Deemed Exports.
3. Emerging Technologies—Results from the Conference: Impact of Export Controls on Higher Education and Scientific Institutions—March 26–27, 2013, at the University of Pennsylvania.
4. Intelligence and National Security Alliance Innovations Showcase Program.

Closed Session: 1:30 p.m.–4:00 p.m.

Discussion of matters determined to be exempt from the provisions relating to public meetings found in 5 U.S.C. app. 2 §§ 10(a)(1) and 10(a)(3).

The Assistant Secretary for Administration, with the concurrence of the delegate of the General Counsel, formally determined on October 4, 2012, pursuant to Section 10(d) of the Federal Advisory Committee Act, as amended, that the portion of the meeting dealing with matters the of which would be likely to frustrate significantly implementation of a proposed agency action as described in 5 U.S.C. 552b(c)(9)(B) shall be exempt from the provisions relating to public meetings found in 5 U.S.C. app. 2 §§ 10(a)1 and 10(a)(3). The remaining portions of the meeting will be open to the public.

Friday, April 26

Open Session: 8:30 a.m.–3:30 p.m.

1. Discussion on status of the Export Control Reform Initiatives.
2. Basic Research and Emerging Technologies.
3. Emerging Technologies and Export Controls-NASA Tech Briefs.
4. Emerging Technologies Implications for Industry-University Collaborations.
5. Upcoming Committee tasks.

The open sessions will be accessible via teleconference to 40 participants on a first come, first serve basis. To join the conference, submit inquiries to Ms. Yvette Springer at *Yvette.Springer@bis.doc.gov* no later than, April 18, 2013.

A limited number of seats will be available for the public session. Reservations are not accepted. To the extent that time permits, members of the public may present oral statements to the Committee. The public may submit written statements at any time before or after the meeting. However, to facilitate the distribution of public presentation materials to the Committee members, the Committee suggests that presenters forward the public presentation materials prior to the meeting to Ms. Springer via email.

For more information, call Yvette Springer at (202) 482–2813.

Dated: April 4, 2013.

Yvette Springer,

Committee Liaison Officer.

[FR Doc. 2013–08313 Filed 4–9–13; 8:45 am]

BILLING CODE 3510–JT–P

DEPARTMENT OF COMMERCE

National Oceanic and Atmospheric Administration

RIN 0648–XC615

Supplemental Draft Environmental Impact Statement for Effects of Oil and Gas Activities in the Arctic Ocean

AGENCY: National Marine Fisheries Service (NMFS), National Oceanic and Atmospheric Administration (NOAA), Commerce.

ACTION: Extension of comment period.

SUMMARY: On March 29, 2013, notice was published in the **Federal Register** that NMFS had released for public comment the ''Supplemental Draft Environmental Impact Statement (DEIS) for the Effects of Oil and Gas Activities in the Arctic Ocean.'' Based on a written request received by NMFS, the public comment period for this DEIS has been extended by 30 days.

DATES: All comments and written statements must be postmarked no later than Thursday, June 27, 2013.

ADDRESSES: The Supplemental DEIS is available for review online at *http://www.nmfs.noaa.gov/pr/permits/eis/arctic.htm.* You may submit comments on this document, identified by NOAA–NMFS–2013–0054, by any of the following methods:

- *Electronic Submission:* Submit all electronic public comments via the Federal e-Rulemaking Portal *www.regulations.gov.* To submit comments via the e-Rulemaking Portal, enter NOAA–NMFS–2013–0054 in the keyword search. Locate the document you wish to comment on from the resulting list and click on the ''Comment Now'' icon on the right of that line.
- *Mail:* Office of Protected Resources, 1315 East-West Highway, Room 13115, Silver Spring, MD 20910
- *Fax:* (301) 713–0376, Attn: Candace Nachman
- *Public Hearings:* Oral and written comments will be accepted during the upcoming public meetings.

Instructions: Comments must be submitted by one of the above methods to ensure that the comments are received, documented, and considered by NMFS. Comments sent by any other method, to any other address or individual, or received after the end of the comment period, may not be considered. All comments received are a part of the public record and will generally be posted for public viewing on *www.regulations.gov* without change. All personal identifying information (e.g., name, address, etc.) submitted voluntarily by the sender will be publicly accessible. Do not submit confidential business information, or otherwise sensitive or protected information. NMFS will accept anonymous comments (enter ''N/A'' in the required fields if you wish to remain anonymous). Attachments to electronic comments will be accepted in Microsoft Word or Excel or Adobe PDF file formats only.

FOR FURTHER INFORMATION CONTACT: Candace Nachman, Jolie Harrison, or Michael Payne, Office of Protected Resources, NMFS, at (301) 427–8401.

SUPPLEMENTARY INFORMATION: Additional information on the content of the Supplemental DEIS can be found in the Notice of Availability (78 FR 19212, March 29, 2013).

Dated: April 5, 2013.

Helen M. Golde,

Acting Director, Office of Protected Resources, National Marine Fisheries Service.

[FR Doc. 2013–08365 Filed 4–9–13; 8:45 am]

BILLING CODE 3510–22–P

DEPARTMENT OF COMMERCE

National Oceanic and Atmospheric Administration

RIN 0648–XC588

Marine Mammals; File No. 17344

AGENCY: National Marine Fisheries Service (NMFS), National Oceanic and Atmospheric Administration (NOAA), Commerce.

ACTION: Notice; receipt of application.

SUMMARY: Notice is hereby given that Samuel Wasser, Ph.D., University of Washington, Department of Biology, P.O. Box 351800, Seattle, WA 98195, has applied in due form for a permit to conduct research on killer whales (*Orcinus orca*).

DATES: Written, telefaxed, or email comments must be received on or before May 10, 2013.

ADDRESSES: The application and related documents are available for review by selecting ''Records Open for Public Comment'' from the *Features* box on the Applications and Permits for Protected Species (APPS) home page, *https://apps.nmfs.noaa.gov,* and then selecting File No. 17344 from the list of available applications.

These documents are also available upon written request or by appointment in the following offices:

Permits and Conservation Division, Office of Protected Resources, NMFS, 1315 East-West Highway, Room 13705, Silver Spring, MD 20910; phone (301) 427–8401; fax (301) 713–0376; and

Northwest Region, NMFS, 7600 Sand Point Way NE., BIN C15700, Bldg. 1, Seattle, WA 98115–0700; phone (206) 526–6150; fax (206) 526–6426.

Written comments on this application should be submitted to the Chief, Permits and Conservation Division, at the address listed above. Comments may also be submitted by facsimile to (301) 713–0376, or by email to *NMFS.Pr1Comments@noaa.gov.* Please include the File No. in the subject line of the email comment.

Those individuals requesting a public hearing should submit a written request to the Chief, Permits and Conservation Division at the address listed above. The request should set forth the specific reasons why a hearing on this application would be appropriate.

FOR FURTHER INFORMATION CONTACT: Carrie Hubard or Jennifer Skidmore, (301) 427–8401.

SUPPLEMENTARY INFORMATION: The subject permit is requested under the authority of the Marine Mammal Protection Act of 1972, as amended (MMPA; 16 U.S.C. 1361 *et seq.*), the regulations governing the taking and importing of marine mammals (50 CFR part 216), the Endangered Species Act of 1973, as amended (ESA; 16 U.S.C. 1531 *et seq.*), and the regulations governing the taking, importing, and exporting of endangered and threatened species (50 CFR 222–226).

The applicant requests a permit to study killer whales of the endangered Eastern North Pacific Southern Resident stock in waters of Washington, including the San Juan Islands and Puget Sound. The objective of the research is to use noninvasive physiological and genetic measures to examine the impacts of the three major threats to this stock: (1) Reduced prey ability; (2) excessive exposures to environmental contaminants; and (3) disturbance from private and commercial vessel traffic. The primary research method is the collection of opportunistic fecal samples, which would be scooped from the water column and then analyzed for genetics, hormones, and contaminants. Each year, the entire population of Southern Resident killer whales (currently estimated at 87 individuals) would be

approached up to six times for photo-identification and fecal sampling. Fifteen killer whales of the Eastern North Pacific transient stock may also be approached annually for the same activities. The permit would be valid for five years.

In compliance with the National Environmental Policy Act of 1969 (42 U.S.C. 4321 *et seq.*), an initial determination has been made that the activity proposed is categorically excluded from the requirement to prepare an environmental assessment or environmental impact statement.

Concurrent with the publication of this notice in the **Federal Register**, NMFS is forwarding copies of the application to the Marine Mammal Commission and its Committee of Scientific Advisors.

Dated: March 26, 2013.

Helen M. Golde,

Acting Director, Office of Protected Resources, National Marine Fisheries Service.

[FR Doc. 2013–08363 Filed 4–9–13; 8:45 am]

BILLING CODE 3510–22–P

COMMITTEE FOR PURCHASE FROM PEOPLE WHO ARE BLIND OR SEVERELY DISABLED

Procurement List; Additions and Deletions; Recissions

AGENCY: Committee for Purchase From People Who Are Blind or Severely Disabled.

ACTION: Rescission of Previous Procurement List Decision.

SUMMARY: The Committee for Purchase From People Who Are Blind or Severely Disabled (Committee) is providing notice of a rescission of its previous Procurement List decision adding ''Eyewear'' as described in the Notice in the **Federal Register** of October 26, 2012.

FOR FURTHER INFORMATION CONTACT: Barry S. Lineback, Director, Business Operations, 1401 S. Clark St., Suite 10800, Arlington, VA, Telephone: (703) 603–2118; FAX 703–603–0655 or email *CMTEFedReg@abilityone.gov*.

SUPPLEMENTARY INFORMATION: Federal Register Notice of Friday, October 26, 2012 (77 FR 65365–65366), ''Procurement List: Additions'', announced that the Committee had approved adding ''Eyewear'' products to the Procurement List (PL) with ''*Effective Date:* November 26, 2012'' specified. By **Federal Register** Notice of December 11, 2012 (77 FR 73620—73621), the Committee announced that it was suspending the effective date of the addition of the ''Eyewear'' products in order to reexamine whether it had all appropriate information for consideration when the Committee made its original decision to add the eyewear products to the PL. As a result of this reconsideration, the Committee is rescinding its original decision and thereby the Notice of the addition of the following listed products from the PL, effective upon publication of this Notice:

Eyewear

NSN: 6650–00–NIB–0009—Single Vision, Plastic, Clear
NSN: 6650–00–NIB–0010—Flat Top 28, Bifocal, Plastic, Clear
NSN: 6650–00–NIB–0011—Flat Top 35, Bifocal, Plastic, Clear
NSN: 6650–00–NIB–0012—Round 25, Round 28 Bifocal, Plastic, Clear
NSN: 6650–00–NIB–0013—Flat Top 7x28, Trifocal, Plastic, Clear
NSN: 6650–00–NIB–0014—Flat Top 8x35, Trifocal, Plastic, Clear
NSN: 6650–00–NIB–0015—Progressives, Plastic, Clear
NSN: 6650–00–NIB–0016—SV, Aspheric, Lenticular, Plastic, Clear
NSN: 6650–00–NIB–0017—FT/Round, Aspheric, Lenticular, Plastic, Clear
NSN: 6650–00–NIB–0018—Bifocal, Executive, Plastic, Clear
NSN: 6650–00–NIB–0019—Single Vision, Glass, Clear
NSN: 6650–00–NIB–0020—Flat Top 28, Bifocal, Glass, Clear
NSN: 6650–00–NIB–0021—Flat Top 35, Bifocal, Glass, Clear
NSN: 6650–00–NIB–0022—Flat Top 7x28, Trifocal, Glass, Clear
NSN: 6650–00–NIB–0023—Flat Top 8x35, Trifocal, Glass, Clear
NSN: 6650–00–NIB–0024—Progressives, Glass, Clear
NSN: 6650–00–NIB–0025—Executive, Bifocal, Glass, Clear
NSN: 6650–00–NIB–0026—Single Vision, Polycarbonate, Clear
NSN: 6650–00–NIB–0027—Flat Top 28, Bifocal, Polycarbonate, Clear
NSN: 6650–00–NIB–0028—Flat Top 35, Bifocal, Polycarbonate, Clear
NSN: 6650–00–NIB–0029—Flat Top 7x28, Trifocal, Polycarbonate, Clear
NSN: 6650–00–NIB–0030—Flat Top 8x35, Trifocal, Polycarbonate, Clear
NSN: 6650–00–NIB–0031—Progressives (VIP, Adaptar, Freedom, Image), Polycarbonate
NSN: 6650–00–NIB–0032—Single Vision, Plastic, Clear
NSN: 6650–00–NIB–0033—Flat Top 28, Bifocal, Plastic, Clear
NSN: 6650–00–NIB–0034—Flat Top 35, Bifocal, Plastic, Clear
NSN: 6650–00–NIB–0035—Round 25 and 28, Bifocal, Plastic, Clear
NSN: 6650–00–NIB–0036—Flat Top 7x28, Trifocal, Plastic, Clear
NSN: 6650–00–NIB–0037—Flat Top 8x35, Trifocal, Plastic, Clear
NSN: 6650–00–NIB–0038—Progressives, Plastic, Clear
NSN: 6650–00–NIB–0039—SV, Aspheric, Lenticular, Plastic, Clear
NSN: 6650–00–NIB–0040—FT or round aspheric lenticular, Plastic, Clear
NSN: 6650–00–NIB–0041—Bifocal, Executive, Plastic, Clear
NSN: 6650–00–NIB–0042—Single Vision, Glass, Clear
NSN: 6650–00–NIB–0043—Flat Top 28, Bifocal, Glass, Clear
NSN: 6650–00–NIB–0044—Flat Top 35, Bifocal, Glass, Clear
NSN: 6650–00–NIB–0045—Flat Top 7x28, Trifocal, Glass, Clear
NSN: 6650–00–NIB–0046—Flat Top 8x35, Trifocal, Glass, Clear
NSN: 6650–00–NIB–0047—Progressives (VIP, Adaptar, Freedom), Glass, Clear
NSN: 6650–00–NIB–0048—Bifocal, Executive, Glass, Clear
NSN: 6650–00–NIB–0049—Single Vision, Polycarbonate, Clear
NSN: 6650–00–NIB–0050—Flat Top 28, Polycarbonate, Clear
NSN: 6650–00–NIB–0051—Flat Top 35, Bifocal, Polycarbonate, Clear
NSN: 6650–00–NIB–0052—Flat Top 7x28, Trifocal, Polycarbonate, Clear
NSN: 6650–00–NIB–0053—Flat Top 8x35, Trifocal, Polycarbonate, Clear
NSN: 6650–00–NIB–0054—Lenses, Progressives (VIP, Adaptar, Freedom, Image), Polycarbonate
NSN: 6650–00–NIB–0055—Transition, Plastic, CR–39
NSN: 6650–00–NIB–0056—Photochromatic/Transition, (Polycarbonate Material)
NSN: 6650–00–NIB–0057—Photogrey (glass only)
NSN: 6650–00–NIB–0058—High Index transition (CR 39)
NSN: 6650–00–NIB–0059—Anti-reflective Coating (CR 39 and polycarbonate)
NSN: 6650–00–NIB–0060—Ultraviolet Coating (CR 39)
NSN: 6650–00–NIB–0061—Polarized Lenses (CR 39)
NSN: 6650–00–NIB–0062—Slab-off (polycarbonate, CR 39: trifocal and bifocal
NSN: 6650–00–NIB–0063—High Index (CR–39)
NSN: 6650–00–NIB–0064—Prism (up to 6 diopters no charge) >6 diopters/diopter
NSN: 6650–00–NIB–0065—Diopter + or − 9.0 and above
NSN: 6650–00–NIB–0066—Lenses, oversize eye, greater than 58, excluding progressive
NSN: 6650–00–NIB–0067—Hyper 3 drop SV, multifocal (CR 39)
NSN: 6650–00–NIB–0068—Add powers over 4.0
NSN: 6650–00–NIB–0069—Plastic or Metal

Coverage: C-List for 100% of the requirements of Veterans Integrated Service Networks (VISNs) 1, 3, 4, 5, 6, 7 and 8 as aggregated by the Service Area Office East, Veterans Health Administration, Department of Veterans Affairs, Pittsburgh, PA.

NPA: Winston-Salem Industries for the Blind, Inc., Winston-Salem, NC

Contracting Activity: Department of Veterans Affairs Service Area Organization East, Pittsburgh, PA

Through earlier Committee decisions that have not been rescinded, the VA's

requirements for VISNs 2, 7, and Port Richey, FL remain on the PL.

Barry S. Lineback,

Director, Business Operations.

[FR Doc. 2013–08256 Filed 4–9–13; 8:45 am]

BILLING CODE 6353–01–P

DEPARTMENT OF DEFENSE

Office of the Secretary

Defense Advisory Committee on Military Personnel Testing; Notice of Federal Advisory Committee Meeting

AGENCY: Under Secretary of Defense for Personnel and Readiness, DoD.

ACTION: Meeting notice.

SUMMARY: Under the provisions of the Federal Advisory Committee Act of 1972 (5 U.S.C., Appendix, as amended), the Government in the Sunshine Act of 1976 (5 U.S.C. 552b, as amended), and 41 CFR 102–3.150, the Department of Defense announces that the following Federal advisory committee meeting of the Defense Advisory Committee on Military Personnel Testing will take place.

DATES: Thursday, May 9, 2013, from 9:00 a.m. to 4:00 p.m. and Friday, May 10, 2013, from 9:00 a.m. to 12:00 p.m.

ADDRESSES: The meeting will be held at the Pine Inn, Ocean Avenue, between Lincoln and Monte Verde Street, Carmel, California.

FOR FURTHER INFORMATION CONTACT: Committee's Designated Federal Officer or Point of Contact: Dr. Jane M. Arabian, Assistant Director, Accession Policy, Office of the Under Secretary of Defense (Personnel and Readiness), Room 3D1066, The Pentagon, Washington, DC 20301–4000, telephone (703) 697–9271.

SUPPLEMENTARY INFORMATION: Purpose of the Meeting: The purpose of the meeting is to review planned changes and progress in developing computerized tests for military enlistment.

Agenda: The agenda includes an overview of current enlistment test development timelines and planned research for the next 3 years.

Public's Accessibility to the Meeting: Pursuant to 5 U.S.C. 552b and 41 CFR 102–3.140 through 102–3.165, and the availability of space, this meeting is open to the public. Persons desiring to make oral presentations or submit written statements for consideration at the Committee meeting must contact Dr. Jane M. Arabian at the address or telephone number in **FOR FURTHER INFORMATION CONTACT** no later than May 1, 2013.

Dated: April 5, 2013.

Aaron Siegel,

Alternate OSD Federal Register Liaison Officer, Department of Defense.

[FR Doc. 2013–08395 Filed 4–9–13; 8:45 am]

BILLING CODE 5001–06–P

DEPARTMENT OF DEFENSE

Department of the Navy

Meeting of the Board of Advisors to the Presidents of the Naval Postgraduate School and Naval War College, Naval Postgraduate School Subcommittee

AGENCY: Department of the Navy, DoD.

ACTION: Notice of Partially Closed Meeting.

SUMMARY: Pursuant to the provisions of the Federal Advisory Committee Act (Pub. L. 92–463, as amended), notice is hereby given that the following meeting of the aforementioned subcommittee will be held. The executive session of this meeting from 9:00 a.m. to 11:30 a.m. on April 25, 2013, will involve premature disclosure of information that is likely to significantly frustrate implementation of proposed agency actions, and disclosure of information of a personal nature that would constitute an invasion of privacy. For this reason, the executive session of this meeting will be closed to the public.

DATES: The meeting will be held on Wednesday, April 24, 2013, from 8:00 a.m. to 4:30 p.m. and on Thursday, April 25, 2013, from 8:00 a.m. to 4:30 p.m. Pacific Time Zone. All sessions with the exception of the executive session on April 25, 2013, from 9:00 a.m. to 11:30 a.m. are open to the public.

ADDRESSES: The meeting will be held at the Naval Postgraduate School, Ingersoll Hall, Room 361, 1 University Circle, Monterey, CA.

FOR FURTHER INFORMATION CONTACT: Ms. Jaye Panza, Naval Postgraduate School, Monterey, CA 93943–5001, telephone number 831–656–2514.

SUPPLEMENTARY INFORMATION: The purpose of the meeting is to elicit the advice of the Board on the Naval Service's Postgraduate Education Program and the collaborative exchange and partnership between the Naval Postgraduate School (NPS) and the Air Force Institute of Technology. The board examines the effectiveness with which the NPS is accomplishing its mission. To this end, the board will inquire into the curricula; instruction; physical equipment; administration; state of morale of the student body, faculty, and staff; fiscal affairs; and any other matters relating to the operation of the NPS as the board considers pertinent. In particular, the subcommittee will hear and discuss with NPS leadership the recently issued report on NPS by the Department of the Navy Inspector General. The subcommittee will review the NPS plans for addressing the deficiencies and recommendations cited in the IG report and provide advice to NPS leaders. The subcommittee will also through the Board of Advisors (BOA) to the Presidents of NPS and Naval War College report on progress to the Secretary of the Navy. The Board will meet in closed executive session on Thursday, April 25, 2013 from 9:00 a.m. to 11:30 a.m. in accordance with the provision set forth in section 552b(c) of Title 5 U.S.C. Topics to be discussed are: (a) Inspection Recommendations from the Naval Inspector General and potential actions in response, led by Assistant Secretary of the Navy, Manpower and Reserve Affairs; and (b) nominations for Board vacancies. The closed session will disclose information that is likely to significantly frustrate implementation of proposed agency actions. With respect to filling Board vacancies this portion will include disclosure of information of a personal nature that would constitute an unwarranted invasion of personal privacy. Individuals without a Department of Defense government/CAC card require an escort at the meeting location. For access, information, or to send written comments regarding the NPS Subcommittee contact Ms. Jaye Panza, Designated Federal Officer, Naval Postgraduate School, 1 University Circle, Monterey, CA 93943–5001 or by fax 831–656–3145 by April 23, 2013.

Dated: April 5, 2013.

C.K. Chiappetta,

Lieutenant Commander, Office of the Judge Advocate General, U.S. Navy, Federal Register Liaison Officer.

[FR Doc. 2013–08340 Filed 4–9–13; 8:45 am]

BILLING CODE 3810–FF–P

DEPARTMENT OF ENERGY

Orders Granting Authority To Import and Export Natural Gas, To Export Liquefied Natural Gas, To Export Compressed Natural Gas, Vacating Prior Authority and Denying Request for Rehearing During January 2013

	FE Docket Nos.
SABINE PASS LIQUEFACTION, LLC	10–111–LNG
TENASKA WASHINGTON PARTNERS, L.P.	11–160–NG
CHEVRON U.S.A. INC.	12–113–LNG
MAIN PASS ENERGY HUB, LLC	12–114–LNG
IRVING OIL COMMERCIAL GP	12–164–NG
XPRESS NATURAL GAS LLC	12–168–CNG
MERRILL LYNCH COMMODITIES CANADA, ULC	12–169–NG
GAS NATURAL PUERTO RICO INC.	12–170–LNG
ENN CANADA CORPORATION	12–172–LNG
SELKIRK COGEN PARTNERS L.P.	12–173–NG
PANGEA LNG (NORTH AMERICA) HOLDINGS, LLC	12–174–LNG
VITOL INC.	12–176–NG
EXELON GENERATION COMPANY, LLC	12–181–NG
HUSKY MARKETING AND SUPPLY COMPANY	12–182–NG
DOMINION COVE POINT LNG, LP	12–187–LNG
DYNEGY MARKETING AND TRADE, LLC	13–02–NG
PROGAS USA INC.	13–03–NG

AGENCY: Office of Fossil Energy, Department of Energy (DOE).

ACTION: Notice of orders.

SUMMARY: The Office of Fossil Energy (FE) of the Department of Energy gives notice that during January 2013, it issued orders granting authority to import and export natural gas and liquefied natural gas and vacating prior authority. These orders are summarized in the attached appendix and may be found on the FE Web site at *http://www.fossil.energy.gov/programs/gasregulation/authorizations/Orders-2012.html.* They are also available for inspection and copying in the Office of Fossil Energy, Office of Natural Gas Regulatory Activities, Docket Room 3E–033, Forrestal Building, 1000 Independence Avenue SW., Washington, DC 20585, (202) 586–9478. The Docket Room is open between the hours of 8:00 a.m. and 4:30 p.m., Monday through Friday, except Federal holidays.

Issued in Washington, DC, on March 25, 2013.

John A. Anderson,

Manager, Natural Gas Regulatory Activities, Office of Oil and Gas Global Security and Supply, Office of Fossil Energy.

Appendix—DOE/FE Orders Granting Import/Export Authorizations

Order No.	Date issued	FE Docket No.	Authorization holder	Description of action.
3213	01/02/13	12–164–NG	Irving Oil Commercial GP	Order granting blanket authority to export natural gas to Canada.
3214	01/02/13	12–169–NG	Merrill Lynch Commodities Canada, ULC.	Order granting blanket authority to export natural gas to Canada.
3215	01/02/13	12–170–LNG	Gas Natural Puerto Rico Inc.	Order granting blanket authority to import LNG from various international sources by vessel.
3216	01/02/13	12–172–LNG	ENN Canada Corporation	Order granting blanket authority to export natural gas to Canada by truck.
3217	01/02/13	12–173–NG	Selkirk Cogen Partners L.P.	Order granting blanket authority to import/export natural gas from/to Canada.
3218	01/02/13	12–181–NG	Exelon Generation Company, LLC.	Order granting blanket authority to import and export natural gas from and to Canada.
3219	01/02/13	12–182–NG	Husky Marketing and Supply Company.	Order granting blanket authority to import and export natural gas from and to Canada.
3220	01/04/13	12–114–LNG	Main Pass Energy Hub, LLC	Order granting long-term multi-contract authority to export LNG by vessel from the MPEH Deepwater Port to Free Trade Agreement nations.
3221	01/04/13	12–113–LNG	Chevron U.S.A. Inc.	Order granting blanket authority to export previously imported LNG by vessel.
3222	01/08/13	12–168–CNG	Xpress Natural Gas LLC	Order granting long-term multi-contract authority to export compressed natural gas by truck to Canada.
3054–A	01/09/13	11–160–NG	Tenaska Washington Partners, L.P.	Order vacating blanket authority to import natural gas from Canada.
3223	01/18/13	12–187–NG	Dominion Cove Point LNG, LP.	Order granting blanket authority to import LNG from various international sources by vessel.
3224	01/18/13	13–02–NG	Dynegy Marketing and Trade, LLC.	Order granting blanket authority to import/export natural gas from/to Canada.
3225	01/18/13	13–03–NG	ProGas USA Inc.	Order granting blanket authority to import/export natural gas from/to Canada.
3226	01/18/13	12–176–NG	Vitol Inc.	Order granting blanket authority to import/export natural gas from/to Canada, to import LNG from various international sources by vessel, and to export LNG to Canada by vessel and truck.

Order No.	Date issued	FE Docket No.	Authorization holder	Description of action.
2961–B	01/30/13	10–111–LNG	Sabine Pass Liquefaction, LLC.	Opinion and Order denying request for rehearing of Order denying motion for late intervention, dismissing request for rehearing of Order 2961–A, and dismissing motion for a stay pendent lite.
3227	01/30/13	12–174–LNG	Pangea LNG (North America) Holdings, LLC.	Order granting long-term multi-contract authority to export LNG by vessel from the proposed South Texas LNG Terminal to Free Trade Agreement nations.

[FR Doc. 2013–08354 Filed 4–9–13; 8:45 am]

BILLING CODE 6450–01–P

DEPARTMENT OF ENERGY

Orders Granting Authority to Import and Export Natural Gas, To Import Liquefied Natural Gas, To Export Liquefied Natural Gas, and Vacating Prior Authority During February 2013

	FE Docket Nos.
J.P. MORGAN COMMODITIES CANADA CORPORATION	12–151–LNG
SEMPRA LNG MARKETING, LLC	12–155–LNG
DTE GAS COMPANY	12–175–NG
MAGNOLIA LNG, LLC	12–183–LNG
TC RAVENSWOOD, LLC	12–185–NG
TOTAL GAS & POWER NORTH AMERICA, INC.	13–01–NG
RESOLUTE FP US INC.	13–05–NG
GAS NATURAL APROVISIONAMIENTOS SDG, S.A.	13–07–LNG
SOCIETE GENERALE ENERGY INC.	13–08–NG
SOCIETE GENERALE ENERGY CORP.	13–09–NG
FREEPOINT COMMODITIES LLC	13–10–NG
PLANET ENERGY CORP.	13–13–NG
STATOIL NATURAL GAS LLC	13–14–LNG
PACIFICORP	13–16–NG
CARGILL, INCORPORATED	13–17–NG
EXCELERATE ENERGY GAS MARKETING, LIMITED PARTNERSHIP	13–19–LNG
ROYAL BANK OF CANADA	13–21–NG
AECO GAS STORAGE PARTNERSHIP	13–22–NG
OMIMEX CANADA, LTD.	13–23–NG

AGENCY: Office of Fossil Energy, Department of Energy (DOE).

ACTION: Notice of orders.

SUMMARY: The Office of Fossil Energy (FE) of the Department of Energy gives notice that during February 2013, it issued orders granting authority to import and export natural gas and liquefied natural gas and vacating prior authority. These orders are summarized in the attached appendix and may be found on the FE Web site at *http://www.fossil.energy.gov/programs/gasregulation/authorizations/Orders-2012.html.* They are also available for inspection and copying in the Office of Fossil Energy, Office of Natural Gas Regulatory Activities, Docket Room 3E–033, Forrestal Building, 1000 Independence Avenue SW., Washington, DC 20585, (202) 586–9478. The Docket Room is open between the hours of 8:00 a.m. and 4:30 p.m., Monday through Friday, except Federal holidays.

Issued in Washington, DC, on March 25, 2013.

John A. Anderson,

Manager, Natural Gas Regulatory Activities, Office of Oil and Gas Global Security and Supply, Office of Fossil Energy.

Appendix—DOE/FE Orders Granting Import/Export Authorizations

Order No.	Date issued	FE Docket No.	Authorization holder	Description of action
3228	02/12/13	12–175–NG	DTE Gas Company	Order granting blanket authority to import/export natural gas from/to Canada and vacating prior Orders 3062 and 2902.
3229	02/12/13	13–05–NG	Resolute FP US Inc.	Order granting blanket authority to import/export natural gas from/to Canada.
3230	02/12/13	13–10–NG	Freepoint Commodities LLC	Order granting blanket authority to import/export natural gas from/to Canada/Mexico, to import LNG from Canada/Mexico by truck, to export LNG to Canada/Mexico by vessel and truck, and to import LNG from various international sources by vessel.
3231	02/13/13	12–155–LNG	Sempra LNG Marketing, LLC	Order granting blanket authority to export previously imported LNG by vessel.

Order No.	Date issued	FE Docket No.	Authorization holder	Description of action
3232	02/19/13	12–185–NG	TC Ravenswood, LLC	Order granting blanket authority to import/export natural gas from/to Canada.
3233	02/19/13	13–07–LNG	Gas Natural Aprovisionamientos SDG, S.A.	Order granting blanket authority to import LNG from various international sources by vessel.
3234	02/19/13	13–13–NG	Planet Energy Corp.	Order granting blanket authority to import/export natural gas from/to Canada.
3235	02/19/13	13–16–NG	Pacificorp	Order granting blanket authority to import/export natural gas from/to Canada.
3236	02/19/13	12–113–LNG	Excelerate Energy Gas Marketing, Limited Partnership.	Order granting blanket authority to import LNG from various international sources by vessel.
3237	02/19/13	13–21–NG	Royal Bank of Canada	Order granting blanket authority to import/export natural gas from/to Canada.
3238	02/19/13	13–23–NG	Omimex Canada, Ltd.	Order granting blanket authority to import natural gas from Canada.
3239	02/20/13	13–01–NG	Total Gas & Power North America, Inc.	Order granting blanket authority to import/export natural gas from/to Canada, to import LNG from various international sources by vessel.
3240	02/20/13	13–08–NG	Societe Generale Energy Inc.	Order granting blanket authority to import/export natural gas from/to Canada/Mexico, to import LNG from Canada/Mexico by truck, to export LNG to Canada/Mexico by vessel and truck, and to import LNG from various international sources by vessel.
3241	02/20/13	13–09–NG	Societe Generale Energy Corp.	Order granting blanket authority to import/export natural gas from/to Canada/Mexico, to import LNG from Canada/Mexico by truck, to export LNG to Canada/Mexico by vessel and truck, and to import LNG from various international sources by vessel.
3242	02/20/13	13–14–LNG	Statoil Natural Gas LLC	Order granting blanket authority to import LNG from various international sources by vessel.
3243	02/20/13	13–17–NG	Cargill, Incorporated	Order granting blanket authority to import/export natural gas from/to Canada/Mexico, to import LNG from Canada/Mexico by truck, to export LNG to Canada/Mexico by vessel and truck, and to import LNG from various international sources by vessel.
3244	02/20/13	13–22–NG	AECO Gas Storage Partnership.	Order granting blanket authority to import/export natural gas from/to Canada.
3245	02/27/13	12–183–LNG	Magnolia LNG, LLC	Order granting long-term multi-contract authority to export LNG by vessel from the proposed Magnolia LNG Terminal in Lake Charles, Louisiana to Free Trade Agreement nations.
3246	02/27/13	12–151–LNG	J.P. Morgan Commodities Canada Corporation.	Order granting long-term authority to export LNG to Canada.

[FR Doc. 2013–08358 Filed 4–9–13; 8:45 am]

BILLING CODE 6450–01–P

DEPARTMENT OF ENERGY

Update on Reimbursement for Costs of Remedial Action at Active Uranium and Thorium Processing Sites

AGENCY: Department of Energy.

ACTION: Notice of the Title X claims during fiscal year (FY) 2013.

SUMMARY: In light of fiscal uncertainties facing the Department of Energy (DOE) and the passing of the Consolidated and Further Continuing Appropriations Act, 2013 (Public Law 113–6), funds are not currently available for reimbursement for cleanup work performed by licensees at eligible uranium and thorium processing sites in accordance with Title X of the Energy Policy Act of 1992 (Public Law 102–486). However, licensees may submit their claims for cleanup work with the understanding that DOE is not able to perform audits on the claims or provide licensees with reimbursements unless sufficient funds become available. If licensees do not submit claims in FY 2013, they can do so the following year. In order to keep an accurate account of claims, DOE will continue to provide an annual status report or report letter on reimbursements to licensees of eligible uranium and thorium processing sites. If licensees submit claims in FY 2013, those licensees are not required to resubmit those same claims in later years.

DATES: If claims are submitted during FY 2013 for cleanup work, the closing date is October 1, 2013. All reimbursements are subject to the availability of funds from congressional appropriations.

ADDRESSES: Claims should be forwarded by certified or registered mail, return receipt requested, to U.S. Department of Energy, Office of Legacy Management, Attn: Tracy Plessinger, Title X Coordinator, 2597 Legacy Way, Grand Junction, Colorado 81503. Two copies of the claim should be included with each submission.

FOR FURTHER INFORMATION CONTACT: Contact Theresa Kliczewski at (202) 586–3301 of the U.S. Department of Energy, Office of Environmental Management, Office of Disposition Planning & Policy.

SUPPLEMENTARY INFORMATION: DOE published a final rule under 10 CFR Part 765 in the **Federal Register** on May 23, 1994, (59 FR 26714) to carry out the requirements of Title X of the Energy Policy Act of 1992 (sections 1001–1004 of Public Law 102–486, 42 U.S.C. 2296a *et seq.*) and to establish the procedures for eligible licensees to submit claims for reimbursement. DOE amended the final rule on June 3, 2003, (68 FR 32955) to adopt several technical and

administrative amendments (e.g., statutory increases in the reimbursement ceilings). Title X requires DOE to reimburse eligible uranium and thorium licensees for certain costs of decontamination, decommissioning, reclamation, and other remedial action incurred by licensees at active uranium and thorium processing sites to remediate byproduct material generated as an incident of sales to the United States Government. To be reimbursable, costs of remedial action must be for work which is necessary to comply with applicable requirements of the Uranium Mill Tailings Radiation Control Act of 1978 (42 U.S.C. 7901 *et seq.*) or, where appropriate, with requirements established by a State pursuant to a discontinuance agreement under section 274 of the Atomic Energy Act of 1954 (42 U.S.C. 2021). Claims for reimbursement must be supported by reasonable documentation as determined by DOE in accordance with 10 CFR part 765. Funds for reimbursement will be provided from the Uranium Enrichment Decontamination and Decommissioning Fund established at the Department of Treasury pursuant to section 1801 of the Atomic Energy Act of 1954 (42 U.S.C. 2297g). Payment or obligation of funds shall be subject to the requirements of the Anti-Deficiency Act (31 U.S.C. 1341).

Authority: Section 1001–1004 of Pub. L. 102–486, 106 Stat. 2776 (42 U.S.C. 2296a *et seq.*).

Issued in Washington DC on April 4, 2013.

Mark Senderling,

Director, Office of Disposition Planning & Policy, Office of Environmental Management.

[FR Doc. 2013–08355 Filed 4–9–13; 8:45 am]

BILLING CODE 6450–01–P

DEPARTMENT OF ENERGY

Federal Energy Regulatory Commission

Combined Notice of Filings

Take notice that the Commission has received the following Natural Gas Pipeline Rate and Refund Report filings:

Filings Instituting Proceedings

Docket Numbers: RP13–777–000.
Applicants: Tallgrass Interstate Gas Transmission, L.
Description: Neg Rate 2013–04–2 Anadarko NC NRA to be effective 4/4/2013.
Filed Date: 4/2/13.
Accession Number: 20130402–5062.
Comments Due: 5 p.m. ET 4/15/13.

Docket Numbers: RP13–778–000.
Applicants: Millennium Pipeline Company, LLC.
Description: Negotiated Rate & Non-Conforming Agmt—WPXs, MMGS, SW Energy to be effective 5/1/2013.
Filed Date: 4/2/13.
Accession Number: 20130402–5157.
Comments Due: 5 p.m. ET 4/15/13.

Any person desiring to intervene or protest in any of the above proceedings must file in accordance with Rules 211 and 214 of the Commission's Regulations (18 CFR 385.211 and 385.214) on or before 5:00 p.m. Eastern time on the specified comment date. Protests may be considered, but intervention is necessary to become a party to the proceeding.

The filings are accessible in the Commission's eLibrary system by clicking on the links or querying the docket number.

eFiling is encouraged. More detailed information relating to filing requirements, interventions, protests, and service can be found at: *http://www.ferc.gov/docs-filing/efiling/filing-req.pdf.* For other information, call (866) 208–3676 (toll free). For TTY, call (202) 502–8659.

Dated: April 3, 2013.

Nathaniel J. Davis, Sr.,

Deputy Secretary.

[FR Doc. 2013–08344 Filed 4–9–13; 8:45 am]

BILLING CODE 6717–01–P

DEPARTMENT OF ENERGY

Federal Energy Regulatory Commission

Combined Notice of Filings #1

Take notice that the Commission received the following electric corporate filings:

Docket Numbers: EC13–87–000.
Applicants: BlackRock, Inc.
Description: Request for Reauthorization and Extension of Blanket Authorizations Under Section 203 of the Federal Power Act and Request for Expedited Consideration of BlackRock, Inc.
Filed Date: 4/1/13.
Accession Number: 20130401–5338.
Comments Due: 5 p.m. ET 4/22/13.

Docket Numbers: EC13–88–000.
Applicants: Lease Plan North America, LLC.
Description: Application of Lease Plan North America, LLC for Authorization Under Section 203 of the Federal Power Act, Requests for Confidential Treatment and Waivers, and Request for Expedited Consideration.
Filed Date: 4/2/13.
Accession Number: 20130402–5065.
Comments Due: 5 p.m. ET 4/23/13.

Take notice that the Commission received the following electric rate filings:

Docket Numbers: ER10–3117–001; ER10–1093–002; ER10–1097–002.
Applicants: Lea Power Partners, LLC, Delaware City Refining Company, LLC, PBF Power Marketing LLC.
Description: Supplement to Lea Power Partners, LLC's January 7, 2013 Updated Market Power Analysis and Order No. 697 Compliance Filing.
Filed Date: 4/2/13.
Accession Number: 20130402–5076.
Comments Due: 5 p.m. ET 4/23/13.

Docket Numbers: ER10–3193–002.
Applicants: Brooklyn Navy Yard Cogeneration Partners.
Description: Brooklyn Navy Yard Cogeneration Partners, L.P. submits FERC MBR Tariff to be effective 4/3/2013.
Filed Date: 4/2/13.
Accession Number: 20130402–5068.
Comments Due: 5 p.m. ET 4/23/13.

Docket Numbers: ER11–3417–004; ER10–2895–007; ER11–2292–006; ER11–3942–005; ER11–2293–006; ER10–2917–007; ER11–2294–006; ER12–2447–004; ER10–2918–008; ER12–199–007; ER10–2920–007; ER10–1900–005; ER11–3941–005; ER10–2921–007; ER10–2922–007; ER10–3048–005; ER10–2966–007.
Applicants: Alta Wind VIII, LLC, Bear Swamp Power Company LLC, Brookfield Energy Marketing, Inc, Brookfield Energy Marketing, LP, Brookfield Energy Marketing US LLC, Brookfield Power Piney & Deep Creek LLC, Brookfield Renewable Energy Marketing US, LLC, Brookfield Smoky Mountain Hydropower LLC, Carr Street Generating Station, L.P., Coram California Development, LP, Erie Boulevard Hydropower, L.P., FPL Energy Maine Holdings, LLC, Granite Reliable Power, LLC, Great Lakes Hydro America, LLC, Hawks Nest Hydro LLC, Longview Fibre Paper and Packaging, Inc., Rumford Falls Hydro LLC.
Description: Notice of Change in Status of the Brookfield Companies.
Filed Date: 4/1/13.
Accession Number: 20130401–5335.
Comments Due: 5 p.m. ET 4/22/13.

Docket Numbers: ER12–337–001.
Applicants: Mississippi Power Company.
Description: Mississippi Power Company submits 2011 MRA Rate Case Compliance Filing to be effective 4/1/2012.
Filed Date: 4/1/13.
Accession Number: 20130401–5311.
Comments Due: 5 p.m. ET 4/22/13.

Docket Numbers: ER13–685–003.
Applicants: Public Service Company of New Mexico.
Description: Compliance Filing Docket ER13–685 to be effective N/A.
Filed Date: 4/1/13.
Accession Number: 20130401–5278.
Comments Due: 5 p.m. ET 4/22/13.

Docket Numbers: ER13–687–002.
Applicants: Public Service Company of New Mexico.
Description: Compliance Filing Docket ER13–687 to be effective N/A.
Filed Date: 4/1/13.
Accession Number: 20130401–5281.
Comments Due: 5 p.m. ET 4/22/13.

Docket Numbers: ER13–690–002.
Applicants: Public Service Company of New Mexico.
Description: Compliance Filing in Docket ER13–690 to be effective 8/2/2013.
Filed Date: 4/1/13.
Accession Number: 20130401–5284.
Comments Due: 5 p.m. ET 4/22/13.

Docket Numbers: ER13–996–000.
Applicants: ATO Power, Inc.
Description: Amendment to February 27, 2013 Petition of ATO Power, Inc.
Filed Date: 3/8/13.
Accession Number: 20130308–5051.
Comments Due: 5 p.m. ET 4/9/13.

Docket Numbers: ER13–1220–000.
Applicants: Duquesne Light Company, PJM Interconnection, L.L.C.
Description: Duquesne submits new OATT Attachment H–17C to be effective 6/1/2013.
Filed Date: 4/1/13.
Accession Number: 20130401–5283.
Comments Due: 5 p.m. ET 4/22/13.

Docket Numbers: ER13–1221–000.
Applicants: Mississippi Power Company.
Description: Mississippi Power Company submits MRA 24 Rate Case Filing to be effective 4/1/2013.
Filed Date: 4/1/13.
Accession Number: 20130401–5313.
Comments Due: 5 p.m. ET 4/22/13.

Docket Numbers: ER13–1222–000.
Applicants: NV Energy, Inc.
Description: OATT Revisions to Attachment N—LGIA and Attachment O—SGIA Compliance filing to be effective 3/1/2013.
Filed Date: 4/2/13.
Accession Number: 20130402–5002.
Comments Due: 5 p.m. ET 4/23/13.

Docket Numbers: ER13–1223–000.
Applicants: PJM Interconnection, L.L.C.
Description: PJM Interconnection, L.L.C. submits Notice of Cancellation of Original SA No. 3078 in Docket No. ER12–108–000 to be effective 3/8/2013.
Filed Date: 4/2/13.
Accession Number: 20130402–5050.
Comments Due: 5 p.m. ET 4/23/13.

Docket Numbers: ER13–1224–000.
Applicants: PJM Interconnection, L.L.C.
Description: PJM Interconnection, L.L.C. submits Notice of Cancellation of Wholesale Market Participant Service Agreement No. 2213.
Filed Date: 4/2/13.
Accession Number: 20130402–5052.
Comments Due: 5 p.m. ET 4/23/13.

Docket Numbers: ER13–1225–000.
Applicants: Midwest Independent Transmission System Operator, Inc.
Description: Midwest Independent Transmission System Operator, Inc. submits 04–02–2013 Sch 43B DTE SSR Agreement to be effective 10/1/2012.
Filed Date: 4/2/13.
Accession Number: 20130402–5092.
Comments Due: 5 p.m. ET 4/23/13.

Docket Numbers: ER13–1226–000.
Applicants: Midwest Independent Transmission System Operator, Inc.
Description: Midwest Independent Transmission System Operator, Inc. submits 04–02–2013 SA 6501 DTE SSR Agreement to be effective 10/1/2012.
Filed Date: 4/2/13.
Accession Number: 20130402–5093.
Comments Due: 5 p.m. ET 4/23/13.

The filings are accessible in the Commission's eLibrary system by clicking on the links or querying the docket number.

Any person desiring to intervene or protest in any of the above proceedings must file in accordance with Rules 211 and 214 of the Commission's Regulations (18 CFR 385.211 and 385.214) on or before 5:00 p.m. Eastern time on the specified comment date. Protests may be considered, but intervention is necessary to become a party to the proceeding.

eFiling is encouraged. More detailed information relating to filing requirements, interventions, protests, service, and qualifying facilities filings can be found at: *http://www.ferc.gov/docs-filing/efiling/filing-req.pdf.* For other information, call (866) 208–3676 (toll free). For TTY, call (202) 502–8659.

Dated: April 2, 2013.

Nathaniel J. Davis, Sr.,

Deputy Secretary.

[FR Doc. 2013–08343 Filed 4–9–13; 8:45 am]

BILLING CODE 6717–01–P

FEDERAL COMMUNICATIONS COMMISSION

Federal Advisory Committee Act; Advisory Committee on Diversity for Communications in the Digital Age

AGENCY: Federal Communications Commission.

ACTION: Notice of public meeting.

SUMMARY: In accordance with the Federal Advisory Committee Act, this notice advises interested persons that the Federal Communications Commission's (FCC) Advisory Committee on Diversity for Communications in the Digital Age (''Diversity Committee''). The Committee's mission is to provide recommendations to the Commission regarding policies and practices that will further enhance diversity in the telecommunications and related industries. In particular, the Committee will focus primarily on lowering barrier to entry for historically disadvantaged men and women, exploring ways in which to ensure universal access to and adoption of broadband, and creating an environment that enables employment of a diverse workforce within the telecommunications and related industries. The Committee will be charged with gathering the data and information necessary to formulate meaningful recommendations for these objectives.

DATES: Thursday, April 25 at 2:00 p.m.

ADDRESSES: Federal Communications Commission, Room TW–C305 (Commission Meeting Room), 445 12th Street SW., Washington, DC 20554.

FOR FURTHER INFORMATION CONTACT: Barbara Kreisman, 202–418–1605 *Barbara.Kreisman@FCC.gov.*

SUPPLEMENTARY INFORMATION: At this meeting the current committee structure and other organizational matters will be discussed. The goals and approaches of the advisory group will be discussed, including the substantive direction further recommendations should consider. Committee reports may be submitted.

Members of the general public may attend the meeting. The FCC will attempt to accommodate as many people as possible. However, admittance will be limited to seating availability. The public may submit written comments before the meeting to: Barbara Kreisman, the FCC's Designated Federal Officer for the Diversity Committee by email: *Barbara.Kreisman@fcc.gov* or U.S. Postal Service Mail (Barbara Kreisman, Federal Communications Commission,

Room 2–A665, 445 12th Street SW., Washington, DC 20554).

Open captioning will be provided for this event. Other reasonable accommodations for people with disabilities are available upon request. Requests for such accommodations should be submitted via email to *fcc504@fcc.gov* or by calling the Consumer & Governmental Affairs Bureau at (202) 418–0530 (voice), (202) 418–0432 (tty). Such requests should include a detailed description of the accommodation needed. In addition, please include a way we can contact you if we need more information. Please allow at least five days advance notice; last minute requests will be accepted, but may be impossible to fill.

Additional information regarding the Diversity Committee can be found at *www.fcc.gov/DiversityFAC.*

Federal Communications Commission.

Barbara A. Kreisman,

Chief, Video Division, Media Bureau.

[FR Doc. 2013–08283 Filed 4–9–13; 8:45 am]

BILLING CODE 6712–01–P

FEDERAL COMMUNICATIONS COMMISSION

[AU Docket No. 13–53; DA 13–323]

Tribal Mobility Fund Phase I Auction Scheduled for October 24, 2013; Comment Sought on Competitive Bidding Procedures for Auction 902 and Certain Program Requirements

AGENCY: Federal Communications Commission.

ACTION: Notice.

SUMMARY: In this document, the Commission's Wireless Telecommunications and Wireline Competition Bureaus announce a reverse auction to award up to $50 million in one-time Tribal Mobility Fund Phase I support scheduled to commence on October 24, 2013. This document also seeks comment on competitive bidding procedures for Auction 902 and certain program requirements.

DATES: Comments are due on or before May 10, 2013, and Reply comments are due on or before May 24, 2013.

ADDRESSES: All filings in response to this public notice must refer to AU Docket No. 13–53. The Wireless Telecommunications Bureau and Wireline Competition Bureau strongly encourage interested parties to file comments electronically, and request that an additional copy of all comments and reply comments be submitted electronically to the following address: *auction902@fcc.gov.* To the extent that commenters identify census blocks for removal and/or addition to the list of potentially eligible census blocks, the Bureaus request that such lists be filed in MS Excel format through the Auction 902 email box. Comments may be submitted by any of the following methods:

- *Electronic Filers:* Federal Communications Commission's Web site: *http://fjallfoss.fcc.gov/ecfs2/.* Follow the instructions for submitting comments.
- *Paper Filers:* Parties who choose to file by paper must file an original and one copy of each filing. Filings can be sent by hand or messenger delivery, by commercial overnight courier, or by first-class or overnight U.S. Postal Service mail. All filings must be addressed to the Commission's Secretary, Attn: WTB/ASAD, Office of the Secretary, Federal Communications Commission.
- All hand-delivered or messenger-delivered paper filings for the Commission's Secretary must be delivered to FCC Headquarters at 445 12th Street SW., Room TW–A325, Washington, DC 20554. The filing hours are 8 a.m. to 7 p.m. Eastern Time. All hand deliveries must be held together with rubber bands or fasteners. Any envelopes and boxes must be disposed of *before* entering the building.
- Commercial overnight mail (other than U.S. Postal Service Express Mail and Priority Mail) must be sent to 9300 East Hampton Drive, Capitol Heights, MD 20743.
- U.S. Postal Service first-class, Express, and Priority mail must be addressed to 445 12th Street SW., Washington, DC 20554.
- *People with Disabilities:* Contact the FCC to request reasonable accommodations (accessible format documents, sign language interpreters, CART, etc.) by email: *FCC504@fcc.gov* or phone: 202–418–0530 or TTY: 202–418–0432.

FOR FURTHER INFORMATION CONTACT: *Wireless Telecommunications Bureau, Auctions and Spectrum Access Division:* For Tribal Mobility Fund Phase I questions: Patricia Robbins at (202) 418–0660; for auction process questions: Lisa Stover at (717) 338–2868. *Wireline Competition Bureau, Telecommunications Access Policy Division:* For general universal service questions: Alex Minard at (202) 418–7400. *Consumer and Governmental Affairs Bureau, Office of Native Affairs and Policy:* For questions regarding Tribal lands and Tribal governments: Geoffrey Blackwell at (202) 418–3629 or Irene Flannery at (202) 418–1307.

SUPPLEMENTARY INFORMATION: This is a summary of the *Auction 902 Comment Public Notice* released on March 29, 2013. The complete text of the *Auction 902 Comment Public Notice,* including attachments and related Commission documents, is available for public inspection and copying from 8:00 a.m. to 4:30 p.m. Eastern Time (ET) Monday through Thursday or from 8:00 a.m. to 11:30 a.m. ET on Fridays in the FCC Reference Information Center, 445 12th Street SW., Room CY–A257, Washington, DC 20554. The *Auction 902 Comment Public Notice* and related Commission documents also may be purchased from the Commission's duplicating contractor, Best Copy and Printing, Inc. (BCPI), 445 12th Street SW., Room CY–B402, Washington, DC 20554, telephone 202–488–5300, fax 202–488–5563, or you may contact BCPI at its Web site: *http://www.BCPIWEB.com.* When ordering documents from BCPI, please provide the appropriate FCC document number, for example, DA 13–323 for the *Auction 902 Comment Public Notice.* The *Auction 902 Comment Public Notice* and related documents also are available on the Internet at the Commission's Web site: *http://wireless.fcc.gov/auctions/902/,* or by using the search function for AU Docket No. 13–53 on the Commission's Electronic Comment Filing System (ECFS) Web page at *http://www.fcc.gov/cgb/ecfs/.*

I. Introduction and Summary

1. The Wireless Telecommunications and Wireline Competition Bureaus (the Bureaus) announce a reverse auction to award up to $50 million in one-time Tribal Mobility Fund Phase I support and seek comment on auction procedures and certain related programmatic issues. This auction is scheduled to begin on October 24, 2013, and is designated as Auction 902.

2. Tribal Mobility Fund Phase I will provide one-time support to deploy mobile voice and broadband services to unserved Tribal lands, which have significant telecommunications deployment and connectivity challenges. Auction 902 will award high-cost universal service support through reverse competitive bidding, as envisioned by the Commission in the *USF/ICC Transformation Order,* 76 FR 73830, November 29, 2011 and 76 FR 81562, December 28, 2011. Auction 902 will award one-time support to carriers that commit to provide 3G or better mobile voice and broadband services on Tribal lands where such services are unavailable, based on the bids that will maximize the population covered by new mobile services without exceeding

the budget of $50 million. Because the objective of this auction is to maximize the expansion of advanced services with the available funds, winning bids will generally be those that would achieve the deployment of such services for relatively lower levels of support.

3. Many of the pre-auction processes and bidding procedures for this auction will be similar to those used in the Commission's first auction of universal service support, Auction 901, which were modeled on those regularly used for the Commission's spectrum license auctions. In Auction 902, support for Tribal lands generally will be awarded on the same terms and subject to the same rules as general Mobility Fund Phase I support with a few exceptions tailored to address the unique needs of communities on Tribal lands. Specifically, unlike general Mobility Fund Phase I, for which the number of units in a given unserved census block were calculated according to the number of road miles in that block, for Tribal Mobility Fund Phase I, the number of units in a given census block will be the population of that block. The Commission concluded in the *USF/ICC Transformation Order* that a population-based metric is appropriate for the Tribal Mobility Fund Phase I auction. The population-based coverage unit is the basic unit that will be used to determine the winners in Auction 902 and to measure compliance with the applicable performance requirements.

4. Throughout this document, the term per-pop means per population (or per person) within a given geographic area. The terms 3G, 3G or better, current generation, and advanced are used interchangeably in this document to refer to mobile wireless services that provide voice telephony service on networks that also provide services such as Internet access and email. Areas without 3G or better services and the population within them are referred to as unserved. This document refers to awarding or selecting awardees by auction for simplicity of expression. Each party that becomes a winning bidder in the auction must file an application for support. Only after review of the application to confirm compliance with all the applicable requirements will a winning bidder become authorized to receive support.

5. In the *Auction 902 Comment Public Notice,* the Bureaus propose and seek comment on: (1) Identifying geographic areas eligible for support; (2) determining the basic auction design, whether and how to aggregate eligible areas for bidding, and how awardees will be selected; and (3) establishing certain other bidding procedures, including information disclosure procedures and methodologies for calculating auction and performance default payments. The Bureaus will announce final procedures and other important information such as application deadlines and other dates related to Auction 902 after considering comments provided in response to the *Auction 902 Comment Public Notice,* pursuant to governing statutes and Commission rules.

II. Background

6. In the *USF/ICC Transformation Order,* the Commission comprehensively reformed and modernized the universal service system to help ensure the universal availability of fixed and mobile communication networks capable of providing voice and broadband services where people live, work, and travel. The Commission's universal service reforms include a commitment to fiscal responsibility, accountability, and the use of market-based mechanisms, such as competitive bidding, to provide more targeted and efficient support than in the past. For the first time, the Commission established a universal service support mechanism dedicated exclusively to mobile services—the Mobility Fund.

7. Tribal Mobility Fund Phase I will provide up to $50 million in one-time support to address gaps in mobile services by supporting the build-out of current- and next-generation mobile networks on Tribal lands where these networks are unavailable. This support will be awarded by reverse auction with the objective of maximizing the population covered in eligible unserved areas on Tribal lands within the established budget. The support offered under Tribal Mobility Fund Phase I is in addition to any ongoing support provided under existing high-cost universal service program mechanisms.

8. *Applicant Eligibility.* The *USF/ICC Transformation Order* established application, performance, and other requirements for Mobility Fund Phase I, including Tribal Mobility Fund Phase I. In order to participate in an auction for Tribal Mobility Fund Phase I support, an applicant must be designated as an eligible telecommunications carrier (ETC) for the areas on which it wishes to bid or, if it is a Tribally-owned or -controlled entity, have a pending application for ETC designation for the relevant areas within the boundaries of the Tribal land associated with the Tribe that owns or controls the entity. A Tribally-owned or -controlled entity must have its application for ETC designation pending at the relevant short-form application deadline. The ETC designation must cover a sufficient portion of the bidding area to allow the applicant to satisfy the applicable performance requirements. A Tribal entity that wins support in Auction 902 while its ETC petition is pending must receive an ETC designation prior to support being authorized and disbursed. Allowing a Tribally-owned or -controlled entity to participate at auction while its ETC petition is pending in no way prejudges the ultimate decision on its pending ETC petition. An applicant for Auction 902 must also demonstrate that it has access to the spectrum necessary to satisfy the applicable performance requirements. The requirement that parties have access to spectrum applies equally to all parties, including Tribally-owned or -controlled entities.

9. Because of the lead time necessary to receive designation as an ETC and to acquire access to spectrum, prospective applicants that need to do so are strongly encouraged to initiate both processes as soon as possible in order to increase the likelihood that they will be eligible to participate in Auction 902. Carriers subject to the jurisdiction of a state in which they seek designation should petition that state's commission for designation as an ETC to provide voice service. Carriers not subject to the jurisdiction of the relevant state commission should petition the Commission for designation as an ETC. The Commission has established a framework for determining whether a state commission or the Commission itself has jurisdiction to designate ETCs on Tribal lands. First, a carrier serving Tribal lands must petition the Commission for a determination on whether the state has jurisdiction over the carrier. The Commission then determines whether the carrier is subject to the jurisdiction of a state commission or whether it is subject to a Tribal authority given the Tribal interests involved. In the latter case, the Commission has jurisdiction to designate the carrier as an ETC and will proceed to consider the merits of the carrier's petition for designation. The Bureaus have provided guidance on existing requirements for filing an ETC application with the Commission in a separate public notice: *Eligible Telecommunications Carrier Designation for Participation in Mobility Fund Phase I,* 77 FR 14012. Petitions for designation as an ETC should be filed in WC Docket No. 09–197 and WT Docket No. 10–208, and should not be filed in the docket for Auction 902, AU Docket No. 13–53. The Bureaus adopted a

protective order limiting access to proprietary and confidential information that may be filed in WC Docket No. 09–197 and WT Docket No. 10–208 in connection with petitions filed for designation as an ETC for purposes of participation in any Mobility Fund auction.

10. In addition, an Auction 902 applicant must certify that it is financially and technically capable of providing 3G or better service. An applicant seeking to use the 25 percent bidding credit preference for Tribally-owned or -controlled providers must certify that it is a Tribally-owned or -controlled entity and identify the applicable Tribe and Tribal land in its application. To ensure that Tribal Mobility Fund Phase I support meets the Commission's public interest objectives, recipients will be subject to a variety of obligations, including performance, coverage, collocation, voice and data roaming requirements, and Tribal engagement obligations. Among other things, winning bidders will be required either to deploy 3G service within two years, or 4G service within three years, after the date on which it is authorized to receive support. Those seeking to participate in the auction must file a short-form application by a deadline to be announced, providing information and certifications as to their qualifications to receive support. After the close of the auction, winning bidders must submit a detailed long-form application and procure an irrevocable stand-by Letter (or Letters) of Credit (LOC) to secure the Commission's financial commitment, along with an opinion letter from counsel.

11. *Auction Process Overview.* In the *USF/ICC Transformation Order,* the Commission delegated authority to the Bureaus to implement Tribal Mobility Fund Phase I, including the authority to prepare for and conduct an auction and administer program details. The *Auction 902 Comment Public Notice* focuses on establishing the procedures and processes needed to conduct Auction 902 and administer Tribal Mobility Fund Phase I. Parties responding to the *Auction 902 Comment Public Notice* should be familiar with the details of the *USF/ICC Transformation Order* and the process established for the Commission's first auction of Mobility Fund Phase I support (Auction 901), which serve as the foundation for the process the Bureaus propose here. After reviewing the comments requested by the *Auction 902 Comment Public Notice,* the Bureaus will release a public notice detailing final procedures for Auction 902. That public notice will be released so that potential applicants will have adequate time to familiarize themselves with the specific procedures that will govern the auction and with the obligations of support, including rates and coverage requirements that the Bureaus address in the *Auction 902 Comment Public Notice.* The *Auction 902 Comment Public Notice* summarizes the topics on which the Bureaus seek comment. The Bureaus ask that commenters advocating for particular procedures provide input on the costs and benefits of those procedures.

12. *Areas Eligible for Mobility Fund Support.* To assure that support is being used in areas that are not covered by current or next generation mobile networks, the *USF/ICC Transformation Order* provides that the Bureaus will identify areas currently without such services on a census block basis, and publish a list of census blocks deemed eligible for Tribal Mobility Fund Phase I support. A list of potentially eligible census blocks, as well as the population associated with each, can be found at: *http://wireless.fcc.gov/auctions/902/.* The Bureaus seek comment on various issues regarding the census blocks identified as potentially eligible. The Bureaus will finalize which areas are eligible for support in a public notice establishing final procedures for Auction 902.

13. *Auction Design and Bidding Procedures.* In the *USF/ICC Transformation Order,* the Commission concluded that distributing support through a reverse auction would be the best way to achieve its goal of maximizing consumer benefits with the funds available for Phase I of the Mobility Fund and adopted general competitive bidding rules for that purpose. As envisioned by the Commission, parties seeking support will compete in Auction 902 by indicating the amount of support they need to meet the requirements of Tribal Mobility Fund Phase I in the eligible areas on which they bid. The Commission indicated that a single-round sealed bid auction format would be most appropriate for Tribal Mobility Fund Phase I, but left the final determination to the Bureaus. Based on the Bureaus' analysis of the Mobility Fund Phase I auction results and the opportunity for the Bureaus to refine the auction format for the purposes of Auction 902, which will offer support for fewer eligible areas than Auction 901, the Bureaus now seek further comment on the auction format for Tribal Mobility Fund Phase I. As in the Mobility Fund Phase I auction, the Bureaus propose to award support to maximize advanced services to eligible census blocks that can gain 3G or better mobile services under the Tribal Mobility Fund Phase I budget. In this case, however, the Bureaus will measure coverage based on population rather than road miles. Under the auction design options discussed in the *Auction 902 Comment Public Notice,* bidders would compete not only against other carriers that may be bidding for support in the same areas, but also against carriers bidding for support in other areas nationwide.

14. The list of potentially eligible areas the Bureaus released in connection with the *Auction 902 Comment Public Notice* contains 5,554 census blocks, which have an average area of approximately 2.1 square miles and may be smaller than the minimum areas for which carriers seeking support are likely to want to extend service. Thus, carriers bidding for support are likely to bid on groups of census blocks. To address this need to aggregate census blocks for bidding while maintaining a manageable auction process, the Bureaus propose an aggregation approach and seek comment on any alternative approaches.

15. The Bureaus seek comment on whether to establish any maximum acceptable bid amounts or reserve amounts. In addition, consistent with recent practice in spectrum license auctions and Auction 901, the Bureaus propose to withhold, until after the close of bidding, information from applicants' short-form applications regarding their interest in particular eligible census blocks. The Bureaus seek comment on this proposal.

16. *Post-Auction Procedures.* At the conclusion of the auction, each winning bidder will be required to file an in-depth long-form application to demonstrate that it qualifies for Tribal Mobility Fund Phase I support. The long-form application must include information regarding the winning bidder's ownership, eligibility to receive support, eligibility for a Tribal entity bidding credit, if relevant, and network construction details. An applicant's claim of eligibility for the bidding credit available to Tribally-owned or -controlled providers is subject to review to verify the facts underlying the claim of ownership or control. Winning bidders must also certify that they will offer service in supported areas at rates comparable to those for similar services in urban areas. In the *Auction 902 Comment Public Notice,* the Bureaus describe and seek comment on a proposed standard for demonstrating compliance with this requirement. A winning bidder will be liable for an auction default payment if the bidder

fails to timely file the long-form application, is found ineligible, is disqualified, or otherwise defaults for any reason. In addition, a winning bidder that fails to meet certain obligations will be liable for a performance default payment. Accordingly, winning bidders will be required to provide an irrevocable stand-by LOC in an amount equal to the amount of support, plus an additional amount which would serve as a performance default payment if necessary. The Bureaus seek comment on how to establish auction and performance default payments.

17. *Tribal Engagement.* Any bidder winning support for areas within Tribal lands (any bidder winning support in Auction 902) must notify the appropriate Tribal governments of its winning bid no later than five business days after being identified by public notice as a winning bidder. Thereafter, at the long-form application stage and in annual reports, a bidder winning support in Auction 902 will be required to certify that it has substantively engaged appropriate Tribal officials regarding certain minimum discussion topics and provide a summary of the results of such engagement. Appropriate Tribal government officials are elected or duly authorized government officials of federally recognized American Indian Tribes and Alaska Native Villages. In the instance of the Hawaiian Home Lands, this engagement must occur with the State of Hawaii Department of Hawaiian Home Lands and Office of Hawaiian Affairs. A copy of the certification and summary must be sent to the appropriate Tribal officials when it is sent to the Commission. A winning bidder's engagement with the applicable Tribal governments must consist, at a minimum, of discussion regarding: (1) a needs assessment and deployment planning with a focus on Tribal community anchor institutions; (2) feasibility and sustainability planning; (3) marketing services in a culturally sensitive manner; (4) rights of way processes, land use permitting, facilities siting, environmental and cultural preservation review processes; and (5) compliance with Tribal business and licensing requirements.

III. Areas Eligible For Tribal Mobility Fund Support

A. Identifying Eligible Unserved Census Blocks

18. In the *USF/ICC Transformation Order,* the Commission decided to target Mobility Fund Phase I support, including Tribal Mobility Fund Phase I support, to census blocks without 3G or better service, and determined that Mosaik Solutions (Mosaik) (formerly known as American Roamer) data is the best available data source for determining the availability of such service. Accordingly, the Bureaus have identified potentially eligible blocks on Tribal lands using census blocks from the 2010 Census and the most recently available Mosaik data, from January 2013.

19. The Bureaus identified census blocks within Tribal lands using 2010 Census data. Tribal lands include any federally recognized Indian tribe's reservation, pueblo or colony, including former reservations in Oklahoma, Alaska Native regions established pursuant to the Alaska Native Claims Settlement Act, and Indian Allotments, as well as Hawaiian Home Lands—areas held in trust for native Hawaiians by the state of Hawaii, pursuant to the Hawaiian Homes Commission Act, as amended. Tribal lands in Alaska, i.e., the Annette Island Reserve and areas where federally recognized Alaska Native villages are located within the Alaska Native regions, were identified using 2010 Census data identifying the Annette Island Reserve and Alaska Native village statistical areas.

20. The Bureaus then used geographic information system (GIS) software to determine whether the Mosaik data shows 3G or better wireless coverage at the centroid of each census block. The Bureaus use the term centroid to refer to the internal point (latitude/longitude) of a census block polygon. The Bureaus used ArcGIS software from Esri to determine whether the Mosaik data showed 3G or better coverage at each block's centroid. The following technologies were considered 3G or better: EV–DO, EV–DO Rev A, UMTS/HSPA, HSPA+, WiMAX, and LTE. If the Mosaik data did not show such coverage, the block was determined to be potentially eligible for Tribal Mobility Phase I support. Because support will be awarded based on the bids that will maximize the population covered by new mobile services, any of these census blocks without population were excluded. The Bureaus then excluded any blocks that, during the Auction 901 challenge process, were determined to be served or to be ineligible for Mobility Fund Phase I support because a provider had made a regulatory commitment to provide 3G or better wireless service or had received a funding commitment from a federal executive department or agency in response to the provider's commitment to provide 3G or better wireless service in that area. In addition, the Bureaus identified those census blocks that were the subject of winning bids in Auction 901. Any census block that was the subject of a winning bid in Auction 901 and for which support is authorized at the conclusion of the Auction 901 long-form application review will not be eligible for Tribal Mobility Fund Phase I support. If prior to the release of the list of eligible census blocks the Bureaus determine that any of the identified winning bids from Auction 901 cannot be authorized, but would otherwise be eligible for Auction 902, then such eligible blocks will be made available.

21. Pursuant to the *USF/ICC Transformation Order,* the Bureaus will also make ineligible for support any additional census blocks for which, notwithstanding the absence of 3G service, any provider has made a regulatory commitment to provide 3G or better wireless service, or has received a funding commitment from a federal executive department or agency in response to the carrier's commitment to provide 3G or better wireless service. Such federal funding commitments may have been made under, but are not limited to, the Broadband Technology Opportunities Program and the Broadband Initiatives Program. Furthermore, the Commission established certain bidder-specific restrictions. Specifically, each applicant for Tribal Mobility Fund Phase I support is required to certify that it will not seek support for any areas in which it had made a public commitment to deploy 3G or better wireless service by December 31, 2012. In determining whether an applicant had made such a public commitment, the Bureaus anticipate that they would consider any public statement made with some specificity as to both geographic area and time period. This restriction will not prevent a bidder from seeking and receiving support for an unserved area for which another provider had made such a public commitment.

22. Attachment A–1 released with the *Auctions 902 Comment Public Notice* provides a summary of the list of potentially eligible census blocks. For each state and territory, Attachment A–1 provides the total number of potentially eligible census blocks and the total number of tracts, counties, Tribal lands, and proposed aggregated bidding areas. For each state and territory, Attachment A–1 also provides the total population, area, and road miles of the potentially eligible blocks. Attachment A–2 released with the *Auction 902 Comment Public Notice* provides a list of the proposed aggregated bidding areas. For each area, Attachment A–2 provides the state, county, and Tribal land; the number of

potentially eligible blocks; and the total population, area, and road miles of those blocks. Due to the large number of potentially eligible blocks, the complete list of the individual blocks will be provided in electronic format only, available as a separate Attachment A file at *http://wireless.fcc.gov/auctions/902/*. For each potentially eligible block, individually identified by its Federal Information Processing Series (FIPS) code, the Attachment A file provides the population, area, and road miles of the block; and the associated state, county, tract, Tribe, Tribal land, and proposed aggregated bidding area.

23. If commenters think certain blocks included in the list should not be eligible for support, they should indicate which blocks and provide supporting evidence. Similarly, if commenters think certain blocks not included in the list should be eligible for support, they should indicate which blocks and provide supporting evidence. In particular, the Bureaus note that, in the *USF/ICC Transformation Order,* the Commission required all wireless competitive ETCs in the high-cost program to review the list of eligible census blocks for the purpose of identifying any areas for which they have made a regulatory commitment to provide 3G or better service or received a federal executive department or agency funding commitment in exchange for their commitment to provide 3G or better service. The Bureaus will entertain challenges to the list of potentially eligible census blocks only in the form of comments to the *Auctions 902 Comment Public Notice.* The Commission concluded in the *USF/ICC Transformation Order* that more extended pre-auction review could cause undue delay in making one-time Phase I support available. Further, the Commission decided that providing for post-auction challenges would inject uncertainty and delay into the process. Commenters identifying census blocks for removal and/or addition to the Bureaus' list of potentially eligible census blocks are encouraged to provide detailed information in support of their views. In making such determinations for Auction 901, the Bureaus found demonstrations of coverage to be more credible and convincing where they were supported by maps, discussions of drive tests, explanation of methodologies for determining coverage, and certifications by one or more individuals as to the veracity of the material provided. In light of the population-based metric used to determine the number of unserved units for Tribal Mobility Fund Phase I, drive tests used to demonstrate coverage may be conducted by means other than automobiles on roads. Providers may demonstrate coverage of an area with a statistically significant number of tests in the vicinity of residences being covered. For Auction 901, the Bureaus did not make changes to potentially eligible areas based on submissions making assertions of coverage without any supporting evidence.

24. Based on a review of the comments and any related information, the Bureaus will provide a list of the specific census blocks eligible for support in Auction 902 when it releases the public notice announcing procedures for Auction 902. In addition to providing files containing this final list of census blocks and related data, the Bureaus anticipate providing an interactive mapping interface for this information on the Commission Web site. This interface could aid bidders in matching up their own information on the geographic areas in which they are interested with the blocks available in the auction. The files and/or the interactive mapping interface will also provide data such as associated population and area. The Bureaus anticipate that the file formats and the interactive mapping interface will be very similar to those provided for Auction 901. If potential bidders believe that the Bureaus should not provide the same types of files and interactive mapping interface as those provided for Auction 901, or that the Bureaus should provide additional information or other tools, they should submit detailed comments describing the types of files, information, or tools requested and explaining the reasons for the request.

B. Establishing Unserved Population-Based Units

25. In Auction 902, the Bureaus will use population as the basis for calculating the number of units in each eligible census block for purposes of comparing bids and measuring the performance of Tribal Mobility Fund Phase I support recipients. To establish the population associated with each census block eligible for Tribal Mobility Fund Phase I support, the Bureaus will use the 2010 Census data made available by the Census Bureau. The Attachment A file at *http://wireless.fcc.gov/auctions/902/* includes the population for each potentially eligible census block.

26. The Bureaus propose to include as eligible only those unserved census blocks where there is a population greater than zero. The Bureaus seek comment on this proposal.

IV. Establishing Auction Procedures

A. Auction Design

27. The Bureaus discuss and seek comment on which auction design is most appropriate. The Bureaus also discuss related auction design options, including aggregation approaches, the coverage requirement, and awardee determination. The Bureaus ask for input on these approaches and options, and request that commenters explain how their suggestions will promote the Commission's objective in Tribal Mobility Fund Phase I of maximizing, within the $50 million budget, the population with newly available 3G or better service.

i. Reverse Auction Design

28. The Bureaus seek comment on which reverse auction design would be the most appropriate for the Tribal Mobility Fund Phase I auction. In the Notice of Proposed Rulemaking for Mobility Fund Phase I, the Commission proposed a single-round auction format to disburse funds. A variety of commenters supported a format with more than one round of bidding, arguing that multiple rounds would maximize the benefits of the program through more informed bidding and more competitive bidding. In the *USF/ICC Transformation Order,* the Commission indicated that a single-round sealed bid auction format would be most appropriate for Mobility Fund Phase I, but left the final determination to the Bureaus. For the general Mobility Fund Phase I auction, the Bureaus decided to implement a single-round auction format because they believed that the circumstances favoring a multiple-round auction, i.e., when there are strong interactions among items and when bidders are unsure as to the market value of the item, were not significant enough in Auction 901 to outweigh the Bureaus' concerns about the complexity it would add to the auction. For the purposes of Auction 902, the Bureaus seek comment on whether they should adopt a single-round or a multiple-round reverse auction design.

29. *Single-Round Auction.* Under a single-round approach, during the single bidding round, each bid submitted by a bidder would indicate a per-pop support price at which the bidder is willing to meet the Bureaus' requirements to cover the population in eligible blocks covered by the bid. One advantage of the single-round format is that it would be simple and quick. The Bureaus seek comment on whether a single-round approach would allow bidders to make informed bid decisions

and to submit competitive bids. The purpose of the Tribal Mobility Fund Phase I auction mechanism is to identify whether and, if so, at what price providers are willing to extend advanced mobile coverage over unserved areas in exchange for a one-time support payment. Absent strategic behavior, these bid decisions largely depend upon internal cost structures, private assessments of risk, and other factors related to the providers' specific circumstances. Thus, the Bureaus seek comment on whether the bid amounts of other auction participants are likely to contain information that will significantly affect an individual bidder's own cost assessments, and whether bidders would prefer to have the opportunity to react to the bids of others.

30. *Multiple-Round Auction.* In the particular context of the Tribal Mobility Fund Phase I, the Bureaus seek further comment on whether an alternative auction design might be appropriate for Auction 902. In particular, the Bureaus seek comment on whether they should use a multiple-round auction given the knowledge gained from the Mobility Fund Phase I auction and the smaller number of eligible areas, the likely fewer participants, and the smaller budget. Observing the variation in Auction 901 winning bids, potential bidders in Auction 902 are likely to realize the potential gain from strategically shading up their bids to be just low enough to be accepted, but no lower. Calculating the optimal bid in this situation can be difficult, imposing a burden on bidders, and may result in relatively low-cost providers losing because they miscalculated. This difficulty can be mitigated in a multiple-round auction, such as a descending clock auction, because it does not provide the same opportunity for strategic behavior. The Bureaus seek comment on whether it would be easier for bidders to formulate a successful bid strategy in a multiple-round auction such as a descending clock auction. If commenters support a multiple-round design, the Bureaus seek comment on which design would be most appropriate for Auction 902. Possibilities could include a descending clock auction (in which winning bidders could all be paid the same amount per-pop) and a descending simultaneous multiple round format. Because the Tribal Mobility Fund Phase I auction is smaller in scale, with fewer eligible areas, than the Mobility Fund Phase I auction, the relative benefits of a single-round auction design in terms of simplicity of implementation and time to completion are likely reduced relative to a multiple-round format.

ii. Census Blocks and Aggregations

31. The Commission determined that the census block should be the minimum geographic building block for which support is provided, but left to the Bureaus the task of deciding how to facilitate bidding on aggregations of eligible census blocks. Some aggregation of census blocks may be necessary because census blocks are numerous and can be quite small. The 5,554 census blocks potentially eligible for support under Tribal Mobility Fund Phase I have an average area of approximately 2.1 square miles. The Bureaus believe that on average these blocks are much smaller than the average area covered by a single cell site, which is likely to be the minimum incremental geographic area of expanded coverage with Tribal Mobility Fund Phase I support. The Bureaus propose bidding procedures that will define biddable items consisting of certain aggregations of eligible census blocks and for this purpose suggest using census tracts and Tribal land boundaries.

32. *Aggregation of census blocks by tracts and Tribal lands.* The Bureaus seek comment on an approach that would require bidding on biddable items consisting of predefined aggregations of eligible census blocks. For purposes of bidding, all eligible census blocks would be grouped by the tracts in which they are located. In the case of tracts with more than one Tribal land, the blocks in that tract would be grouped by Tribal land. Bidders would bid by these aggregated areas, not on individual blocks.

33. Under this approach, for each aggregated area that a bidder bids on, the bidder would indicate a per-unit price to cover the population in the eligible census blocks within that area. The auction would assign support to awardees equal to the per-pop rate of their bid multiplied by the population associated with the eligible census blocks within the aggregated area as shown in the information that will be provided by the Bureaus prior to the auction. Under this approach, bidders would be able to bid on multiple aggregated areas and win support for any or all of them.

34. The Bureaus release with the *Auction 902 Comment Public Notice* a list of 5,554 census blocks that would be considered potentially eligible under their criteria. These blocks are located within 258 Census tracts and 292 Tribal lands. If the Bureaus bundled these unserved blocks into tracts and parts of tracts within different Tribal lands for bidding, there would be 417 aggregated areas. One goal in suggesting aggregated areas for this purpose is to create biddable geographic areas closer in scale to minimum buildout areas than census blocks would be. This approach would make it less important that bidders have the ability to place all-or-nothing package bids than would be the case if the basic bidding units were individual census blocks. Further, this approach would lend itself to a simpler method of determining winning bids.

35. In the *USF/ICC Transformation Order,* the Commission noted that because census blocks in Alaska are so much larger on average than census blocks elsewhere, the Bureaus should consider permitting bidding on individual census blocks in Alaska, a suggestion the Bureaus adopted for Mobility Fund Phase I. Under the tract and Tribal land aggregation method proposed, however, the size of the biddable items in Alaska would be similar to those in other states. Therefore, the Bureaus propose and seek comment on using the same aggregation of blocks into biddable items in Alaska as they do elsewhere.

36. The Bureaus ask whether commenters believe that further packaging of the predefined aggregations would be helpful. If so, they should explain the specific need for package bidding and their proposed approach. For example, could such a need be met by allowing bidding on a package of all of the tracts and parts of tracts within a Tribal land? The Bureaus also seek comment on whether a multiple round format, such as a descending clock auction, could facilitate aggregation by allowing bidders to shift bids if outbid on a piece of a group of areas they were seeking to serve.

37. *Coverage requirement.* Under this approach, awardees would be required to provide voice and broadband service meeting the established minimum standards over at least 75 percent of the population associated with the eligible blocks in each aggregated area for which they receive support. The required minimum standards for service will depend on whether a winning bidder elects to deploy 3G or 4G service. This coverage requirement would apply to the total population in the eligible census blocks in each predefined aggregated area on which bids are based. Pursuant to the *USF/ICC Transformation Order,* awardees meeting the minimum coverage requirement could receive their winning bid amount for that population and for any additional population covered in

excess of the 75 percent minimum, up to 100 percent of the population associated with the unserved blocks, subject to the rules on disbursement of support. Because Census data does not specify how population is distributed within a census block, the Bureaus seek comment on how to determine whether the coverage requirement is met. If a provider demonstrates new coverage over the entirety of an eligible census block, the Bureaus can assume coverage of the entire population of that census block. However, the Bureaus seek input on how to evaluate the population served by new coverage where a provider demonstrates new coverage over part of an eligible census block. Should the Bureaus use the area covered and assume that the population is evenly distributed? For example, if an awardee covered 75% of the area, the Bureaus would conclude that the awardee was covering 75% of the population. The Bureaus seek comment on this and other methods.

iii. Determining Awardees

38. *Single-Round Auction.* To determine awardees in a single-round auction under the Bureaus' proposed aggregation approach, the auction system would rank all bids from lowest to highest based on the per-pop bid amount, and assign support first to the lowest per-pop bid. The auction system would continue to assign support to the next lowest per-pop bids in turn, as long as support had not already been assigned for that geographic area, and would continue until the sum of support funds of the winning bids was such that no further winning bids could be supported given the funds available. When calculating how much of the budget remains, for each winning bid the auction system will multiply the per-pop rate bid by the total population in the uncovered blocks. This is because an awardee may receive support for up to 100 percent of the population in the blocks for which it receives support. Ties among identical bids in the same amount for covering the same aggregated area would be resolved by assigning a random number to each bid and then assigning support to the tied bid with the highest random number. A bidder would be eligible to receive support for each of its winning bids equal to the per-pop rate of a winning bid multiplied by the population in the eligible census blocks covered by the bid, subject to meeting the obligations associated with receiving support. For bidders claiming eligibility for the bidding credit available to Tribally-owned or -controlled providers, the auction system would reduce the Tribal entity's bid amount by 25 percent for the purpose of comparing it to other bids, thus increasing the likelihood that Tribally-owned and -controlled entities would receive funding.

39. Because using the ranking method would likely result in monies remaining available from the budget after identifying the last lowest per-pop bid that does not exceed the funds available, the Bureaus seek comment on what to do in these circumstances. If the Bureaus use an approach similar to that used for Auction 901, they would continue to consider bids in order of per-pop bid amount while skipping bids that would require more support than is available. The Bureaus would award such bids as long as funds are available. The Bureaus seek comment on this approach and others. Alternatives could include, for example, not awarding any further support; awarding support as long as the per-pop bid amount does not exceed the last bid by more than twenty percent; or, if there is a set of tied bids all of which cannot be supported, awarding support to that combination of bids that will most nearly exhaust the remaining funds.

40. *Multiple-Round Auction.* If commenters support a multiple-round design, the Bureaus seek comment on appropriate methods for determining awardees under proposed auction design alternatives. In a descending clock auction format, for example, the auction system would announce a per-pop price, and bidders would submit bids for the eligible areas they would cover. If the cost of accepting those bids (population in the areas bid on times the per-pop price) exceeds the budget, the price would be lowered. In each round bidders would be required to satisfy an activity requirement, providing an incentive for consistent bidding throughout the auction. Rounds would continue until the cost of accepting all current bids was below the budget.

41. One issue that must be addressed is the case of more than one bid for the same area, since the Bureaus propose to award only one subsidy per area. A possible solution would be to continue running the clock in those areas where there are multiple bids until only one bid remains. If the clock were initially stopped when the budget requirement was just met, continuing to run the clock in the areas with multiple bids would result in not spending all the funds. The Bureaus seek comment on how to address this overshooting. Possible solutions may include permitting intra-round bids that allow bidders to indicate their change in supply at specified prices between the opening and closing prices in each round.

B. Auction Information Procedures

42. Under the Commission's rules on competitive bidding for high-cost universal service support adopted in the *USF/ICC Transformation Order,* the Bureaus have discretion to limit public disclosure of certain bidder-specific application and bidding information until after the auction, as they do in the case of spectrum license auctions. Consistent with practice in recent spectrum license auctions and in Auction 901, the Bureaus propose to conduct Auction 902 using procedures for limited information disclosure. The Bureaus propose to withhold, until after the close of bidding and announcement of auction results, the public release of information from bidders' short-form applications regarding their interest in particular eligible census blocks. If a single-round auction is used, the Bureaus also propose not to reveal any information that may reveal the identities of bidders placing bids and taking other bidding-related actions. If the Bureaus decide to implement a descending simultaneous multiple round or descending clock auction, they may wish to release additional information about bidding-related actions during the auction, and the Bureaus seek comment on what information should be released under alternative auction design proposals. After the close of bidding, bidders' area selections, bids, and any other bidding-related actions and information would be made publicly available. The Bureaus seek comment on their proposal to implement limited information procedures in Auction 902.

C. Auction Structure

i. Bidding Period

43. The Bureaus will conduct Auction 902 over the Internet. For the single round of bidding in Auction 901, the Bureaus did not provide a telephonic bidding option. In Commission spectrum license auctions, telephonic bidding has served as a backup to on-line bidding. The Bureaus seek comment on whether telephonic bidding should be available in Auction 902, particularly if they use a multiple-round format.

44. The start time for bidding will be announced in a public notice to be released at least one week before the start of the auction. The Bureaus seek comment on this proposal.

ii. Information Relating to Auction Delay, Suspension, or Cancellation

45. For Auction 902, the Bureaus propose that, by public notice or by announcement during the auction, the Bureaus may delay, suspend, or cancel the auction in the event of natural disaster, technical failures, administrative or weather necessity, evidence of an auction security breach or unlawful bidding activity, or for any other reason that affects the fair and efficient conduct of competitive bidding. In such cases, the Bureaus, in their sole discretion, may elect to resume the auction or cancel the auction in its entirety. Network interruption may cause the Bureaus to delay or suspend the auction. The Bureaus emphasize that exercise of this authority would be solely within the discretion of the Bureaus. The Bureaus seek comment on this proposal.

D. Bidding Procedures

i. Maximum Bids and Reserve Prices

46. Under the Commission's rules on competitive bidding for high-cost universal service support adopted in the *USF/ICC Transformation Order,* the Bureaus have discretion to establish maximum acceptable per-unit bid amounts and reserve amounts, separate and apart from any maximum opening bids.

47. The Bureaus concluded that for Auction 901, a reserve price was not needed to guard against unreasonably high winning bids because cross-area competition for support from a budget that was not likely to cover support for all of the areas receiving bids would constrain the bid amounts. The Bureaus seek comment on whether any maximum acceptable per-unit bid amounts, reserve amounts, or maximum opening bid amounts would be appropriate for Auction 902. Although the $50 million budget available for Auction 902 is less than the $300 million budget available for Auction 901, the number of eligible census blocks is also significantly lower in this auction. Will cross-area competition for support adequately constrain bid amounts? The Bureaus further seek comment on what methods should be used to calculate reserve prices and/or maximum or minimum bids if they are adopted. Commenters are advised to support their claims with valuation analyses and suggested amounts or formulas. The Bureaus also seek comment on the appropriate policy if, at the reserve price, less than the full budget is exhausted.

ii. Bid Removal

48. For Auction 902, the Bureaus propose and seek comment on bid removal procedures. In the case of a single-round auction, the Bureaus propose that before the end of the single round of bidding, a bidder would have the option of removing any bid it has placed. By removing selected bids, a bidder may effectively undo any of its bids placed within the single round of bidding. Once the single round of bidding ends, a bidder may no longer remove any of its bids. For multiple-round auction designs, the Bureaus seek comment on potential bid removal mechanisms and whether bidders should be permitted to withdraw bids from previous rounds and, if so, subject to what limitations.

E. Default Payments

49. In the *USF/ICC Transformation Order,* the Commission determined that a winning bidder in a reverse auction for high-cost universal service support that defaults on its bid or on its performance obligations will be liable for a default payment. Bidders selected by the auction process to receive support have a binding obligation to file a post-auction long-form application, by the applicable deadline and consistent with other requirements of the long-form application process, and failure to do so will constitute an auction default. Likewise, an auction default occurs when a winning bidder is found ineligible to be a recipient of support or is disqualified or has its long-form application dismissed for any reason. In addition, the Mobility Fund Phase I rules provide that the failure, by any winning bidder authorized to receive support, to meet its minimum coverage requirement or adequately comply with quality of service or any other requirements will constitute a performance default. The Bureaus have delegated authority to determine in advance of Auction 902 the methodologies for determining the auction and performance default payments. The Bureaus seek comment on how to calculate the auction default payments that will be applicable for Auction 902. The Bureaus note that neither an auction default nor a performance default would result in a change to the set of awardees originally selected by the auction mechanism.

i. Auction Default Payment

50. As noted in the *USF/ICC Transformation Order,* failure to fulfill auction obligations, including those undertaken prior to the award of any support funds, may undermine the stability and predictability of the auction process and impose costs on the Commission and the Universal Service Fund (USF). To safeguard the integrity of the Tribal Mobility Fund Phase I auction, the Bureaus seek comment on an appropriate payment for auction defaults, which occur if a bidder selected by the auction mechanism does not become authorized to receive support after the close of the bidding, e.g., fails to timely file a long-form application, is found ineligible to be a recipient of support or is disqualified, or has its long-form application dismissed for any reason. An auction default could occur at any time between the close of the bidding and the authorization of support for each of the winning bidders. For example, an auction default would occur if a winning bidder failed to file its long-form application by the announced deadline. Similarly, an auction default could occur later in the long-form application review process if a winning bidder that timely filed its long-form application is determined to be ineligible to be a recipient of support or is disqualified.

51. In determining what size payment would be appropriate for a bidder that defaults in the auction, the Bureaus' goals are to ensure the stability and predictability of the auction process by deterring insincere or uninformed bidding without establishing such a high amount as to unduly deter participation in the auction. Such a decision must be made in light of the procedures established for the auction, including auction design. According to the Commission's rules, if the auction default payment is determined as a percentage of the defaulted bid amount, the default payment will not exceed 20 percent of the total defaulted bid. The Bureaus propose to use a rate of five percent of the total defaulted bid. The Bureaus would apply the percentage to the total amount of support based on the bid amount for the geographic area covered by the defaulted bid(s). The Bureaus believe that this amount, below the maximum percentage, will protect against the costs to the Commission and the USF of auction defaults and provide bidders sufficient incentive to fully inform themselves of the obligations associated with participation in the Tribal Mobility Fund Phase I program and to commit to fulfilling those obligations. Under this method of calculating the default payment, bidders would be aware ahead of time of the exact amount of their potential liability based on their bids. The Bureaus note that this proposal is the same percentage instituted for Auction 901.

52. The Bureaus seek comment on this proposal. The Bureaus ask commenters to assess whether their proposal to use an auction default payment percentage of five percent will be adequate to deter insincere or uninformed bidding, and safeguard against costs to the Commission and the USF that may result from such auction defaults, without unduly discouraging auction participation, particularly given that liability for the auction default payment will be imposed without regard to the intentions or fault of any specific defaulting bidder. Are there any circumstances unique to bids to serve Tribal lands that should be considered in the analysis? The Bureaus also seek comment on whether they should use an alternative methodology, such as basing the auction default payment on the difference between the defaulted bid and the next best bid(s) to cover the same population as without the default. Commenters advocating such an approach should explain with specificity how such an approach might work under the options the Bureaus present for auction design. In addition, the Bureaus seek comment on whether, prior to bidding, all applicants for Auction 902 should be required to furnish a bond or place funds on deposit with the Commission in the amount of the maximum anticipated auction default payment. The Bureaus ask for specific input on whether a bond or deposit would be preferable for this purpose and on methodologies for anticipating the maximum auction default payment.

ii. Performance Default Payment

53. Pursuant to the Mobility Fund Phase I rules adopted in the *USF/ICC Transformation Order,* a winning bidder will be subject to a performance default payment if, after it is authorized to receive support, it fails to meet its minimum coverage requirement, other service requirements, or any other condition of Tribal Mobility Fund Phase I support. In addition to being liable for a performance default payment, the recipient will be required to repay the Mobility Fund all of the support it has received and, depending on the circumstances involved, could be disqualified from receiving any additional Tribal Mobility Fund, general Mobility Fund, or other USF support. The Bureaus may obtain its performance default payment and repayment of a recipient's Tribal Mobility Fund Phase I support by drawing upon the irrevocable stand-by LOC that winning bidders will be required to provide.

54. The Bureaus propose to assess a 10 percent default payment where a winning bidder fails to satisfy its performance obligations or any of the requirements and conditions for the support. The percentage would be applied to the total amount of support based on the bid amount for the geographic area covered by the defaulted bid(s). Under this proposal, the LOC would include an additional 10 percent based on the total level of support for which a winning bidder is eligible. In determining what size payment would be appropriate for a performance default, the Bureaus' goals are to ensure the stability and predictability of the auction process by deterring insincere or uninformed bidding without establishing such a high amount as to unduly deter participation in the auction. While both auction defaults and performance defaults may threaten the integrity of the auction process and impose costs on the Commission and the USF, an auction default occurs earlier in the process and may permit an earlier alternative use of the funds that were assigned to the defaulted bid, consistent with the purposes of the universal service program. Thus, the Bureaus believe that the amount of a performance default payment should be higher than the amount of the auction default payment. The Bureaus proposed, and adopted, a 10 percent performance default penalty for Auction 901. The Bureaus seek comment on their proposal for calculating the performance default payment. Will a performance default payment of 10 percent of the total amount of support for which the winning bidder defaults be effective in ensuring that those authorized to receive support will be capable of meeting their obligations and protect against costs to the Commission and the USF, without unduly discouraging auction participation? Are there any circumstances unique to provisioning service to Tribal lands that should be considered in the Bureaus' analysis?

F. Reasonably Comparable Rates

55. *Reasonably Comparable Rates.* Tribal Mobility Fund Phase I recipients must certify that they offer service in areas with support at consumer rates that are within a reasonable range of rates for similar service plans offered by mobile wireless providers in urban areas. Recipients will be subject to this requirement for five years after the date of award of support. Recipients must offer service plans in supported areas that meet the public interest obligations specified in the Commission's Mobility Fund rules and that include a stand-alone voice service plan. The Commission delegated authority to the Bureaus to specify how support recipients could demonstrate compliance with this rate certification. The Commission directed the Bureaus to develop surveys of voice and broadband rates generally that should be completed before the later phases of the Connect America Fund and the Mobility Fund. In order to offer Mobility Fund Phase I support at the earliest time feasible, however, the Commission recognized that the Bureaus might have to implement an approach to the reasonably comparable rates requirement without being able to rely upon the information that will be collected through the surveys. The Bureaus propose to do so in implementing Tribal Mobility Fund Phase I.

56. The Bureaus propose that recipients of Tribal Mobility Fund Phase I support may demonstrate compliance with the reasonably comparable rates requirement in the same manner as recipients of general Mobility Fund Phase I support. The Bureaus propose that a supported provider must demonstrate that its required stand-alone voice plan, and one service plan that offers data services, if it offers such plans, are (1) substantially similar to a service plan offered by at least one mobile wireless service provider in an urban area, and (2) offered at or below the rate for the matching urban service plan. The Bureaus note that any provider that itself offers the same service plan for the same rate in a supported area and in an urban area would be able to meet this requirement. The Bureaus seek comment on this proposal and any alternatives. Commenters offering alternatives to the Bureaus' proposal should address the feasibility of implementing their alternatives in advance of the deadlines for parties to participate in competitive bidding for Tribal Mobility Fund Phase I support. In addition, the Bureaus request that commenters describe the costs and benefits associated with the position they advocate. Adopting this approach for purposes of Tribal Mobility Fund Phase I does not prejudge the approach to be taken with respect to Phase II of the Mobility Fund or the Connect America Fund generally. The Bureaus note that in line with the approach in Auction 901, they do not propose to adopt an urban rate floor for recipients of Tribal Mobility Fund Phase I support.

57. For purposes of Tribal Mobility Fund Phase I, any rate equal to or less than the highest rate charged for a matching service in an urban area would be reasonably comparable to, i.e., within a reasonable range of, rates for

similar service in urban areas. Under this approach, the supported party must offer services at rates within the range but that do not exceed one particular rate that is presumed to be a part of that range. Previously, rates for supported services in high-cost, insular and rural areas served by non-rural carriers were presumed to be reasonably comparable to urban rates nationwide if they fell below the national rate benchmark, which was set at two standard deviations above the average urban rate as reported in an annual rate survey published by the Wireline Competition Bureau. Thus, while the approaches differ, both serve to assure that rates for supported services are reasonably comparable to rates in urban areas. Urban areas are generally served by multiple and diverse providers offering a range of rates and service offerings in competition with one another. Consequently, the Bureaus presume that even the highest rate would qualify as being within a reasonable range of rates for similar service in urban areas, because the rates for the matching urban services reflect the effects of competition in the urban area. Should the Bureaus require additional information to validate this assumption? For example, should an urban service used for matching be required to have a certain number of subscribers or percentage of the relevant market in order to demonstrate its market acceptance? A supported provider using its own urban rates would have little trouble making such a demonstration. However, would other supported providers find the range of urban plans with publicly available subscriber data by plan too limited? Are there alternative criteria that urban plans should meet before their rates may be used for comparison? Do the Bureaus need to be concerned that recipients may seek to game this standard by using an urban rate for comparison that does not reflect a true market rate? How can the Bureaus address any such concerns?

58. The Bureaus would retain discretion to consider whether and how variable rate structures should be taken into account. For example, should a supported stand-alone voice plan that offers 1,000 minutes a month for $50 and additional minutes at $0.08 per minute be considered more expensive than a plan in an urban area that offers 2,000 minutes a month for $100 and additional minutes at $0.10 per minute? There may be circumstances under which data plans with equivalent prices-per-unit match each other even if there are other differences in the plans. The Bureaus propose to address such issues on a case-by-case basis and welcome comment on how to address such circumstances.

59. To provide recipients with flexibility to tailor their offerings to consumer demand while complying with the rule, the Bureaus propose that they deem a Tribal Mobility Fund Phase I support recipient compliant with the terms of the required certification if it can demonstrate that its rates for services satisfy the requirements, and if it provides supporting documentation. The Bureaus seek comment on all aspects of this proposal, in particular whether it meets the goal of assuring that supported services are provided at rates reasonably comparable to those in urban areas, while allowing recipients to have appropriate flexibility in structuring their offerings. The Bureaus also seek comment on any potential alternatives. For example, is there a readily available set of benchmark urban rates for mobile voice and broadband service that the Bureaus could use with respect to Tribal Mobility Fund Phase I?

60. *Urban Areas.* For purposes of this requirement, the Bureaus propose defining urban area as one of the 100 most populated CMAs in the United States. A list of the top 100 CMAs by population is included in Attachment B of the *Auction 902 Comment Public Notice.* Multiple providers currently serve these areas—99.2 percent of the population in these markets is covered by between four to six operators—offering a range of different service plans at prices generally constrained by the numerous providers. Are there other definitions of urban area that commenters believe the Bureaus should consider for purposes of this requirement?

61. The Bureaus propose to make a specific exception for supported parties serving Alaska in light of the distinct character of Alaska and the related costs of providing service, and in line with the approach adopted for Auction 901. The Bureaus propose that supported parties in Alaska may demonstrate comparability by comparison with rates offered in the CMA for Anchorage, Alaska. In this regard, the Bureaus note that the Anchorage, Alaska CMA has a population of over 250,000 and four wireless providers, which indicates that, while reflecting the particular challenges of offering service in Alaska, competition for customers there could act to keep rates for offered services reasonable.

V. Ex Parte Rules

62. This proceeding shall be treated as a permit-but-disclose proceeding in accordance with the Commission's *ex parte* rules. Persons making *ex parte* presentations must file a copy of any written presentation or a memorandum summarizing any oral presentation within two business days after the presentation (unless a different deadline applicable to the Sunshine period applies). Persons making oral *ex parte* presentations are reminded that memoranda summarizing the presentation must (1) list all persons attending or otherwise participating in the meeting at which the *ex parte* presentation was made, and (2) summarize all data presented and arguments made during the presentation. If the presentation consisted in whole or in part of the presentation of data or arguments already reflected in the presenter's written comments, memoranda, or other filings in the proceeding, the presenter may provide citations to such data or arguments in his or her prior comments, memoranda, or other filings (specifying the relevant page and/or paragraph numbers where such data or arguments can be found) in lieu of summarizing them in the memorandum. Documents shown or given to Commission staff during *ex parte* meetings are deemed to be written *ex parte* presentations and must be filed consistent with 47 CFR 1.1206(b). In proceedings governed by 47 CFR 1.49(f) or for which the Commission has made available a method of electronic filing, written *ex parte* presentations and memoranda summarizing oral *ex parte* presentations, and all attachments thereto, must be filed through the electronic comment filing system available for that proceeding, and must be filed in their native format. Participants in this proceeding should familiarize themselves with the Commission's *ex parte* rules.

Federal Communications Commission.

Gary D. Michaels,

Deputy Chief, Auctions and Spectrum Access Division, WTB.

[FR Doc. 2013–08402 Filed 4–9–13; 8:45 am]

BILLING CODE 6712–01–P

FEDERAL MARITIME COMMISSION

Notice of Agreements Filed

The Commission hereby gives notice of the filing of the following agreements under the Shipping Act of 1984. Interested parties may submit comments on the agreements to the Secretary, Federal Maritime Commission, Washington, DC 20573, within ten days of the date this notice appears in the **Federal Register**. Copies of the

agreements are available through the Commission's Web site (*www.fmc.gov*) or by contacting the Office of Agreements at (202) 523–5793 or *tradeanalysis@fmc.gov*.

Agreement No.: 012057–009.

Title: CMA CGM/Maersk Line Space Charter, Sailing and Cooperative Working Agreement Asia to USEC and PNW-Suez/PNW & Panama Loops.

Parties: A.P. Moller-Maersk A/S and CMA CGM S.A.

Filing Party: Mark J. Fink, Esq.; Cozen O'Connor; 1627 I Street NW., Suite 1100; Washington, DC 20006.

Synopsis: The amendment would adjust the number of vessels to be provided, increase the size of those vessels, and adjust the space allocations of the parties accordingly.

Agreement No.: 012116–002.

Title: NYK/Hanjin/Yang Ming/Evergreen Americas North South Service Vessel Sharing Agreement.

Parties: Evergreen Line Joint Service Agreement; Hanjin Shipping Co., Ltd; Nippon Yusen Kaisha; and Yang Ming Marine Transport Corp.

Filing Party: Jacob K. Lee; NYK Line (North America) Inc.; 300 Lighting Way, 5th Floor; Secaucus, NJ 07094.

Synopsis: The amendment adds Yang Ming Marine Transport Corp. and removes Hyundai Merchant Marine Co., Ltd from the agreement.

Agreement No.: 012199.

Title: NYK/Hanjin/Hyundai Americas North South Service Slot Charter Agreement.

Parties: Nippon Yusen Kaisha; Hanjin Shipping Co., Ltd.; and Hyundai Merchant Marine Co., Ltd.

Filing Party: Jacob K. Lee; NYK Line (North America) Inc.; 300 Lighting Way, 5th Floor; Secaucus, NJ 07094.

Synopsis: The agreement authorizes NYK and Hanjin to charter slots to Hyundai on the ANS service in the trade between the East Coast of North America (New York to Florida range) and the East Coast of Brazil.

Agreement No.: 012200.

Title: The G6/Zim Transpacific Vessel Sharing Agreement.

Parties: American President Lines, Ltd. and APL Co. Pte, Ltd. (Operating as one Party); Hapag-Lloyd AG; Hyundai Merchant Marine Co., Ltd.; Mitsui O.S.K. Lines, Ltd.; Nippon Yusen Kaisha; and Orient Overseas Container Line, Limited.; and Zim Integrated Shipping Services Limited.

Filing Party: David F. Smith, Esq.; Cozen O'Connor; 1627 I Street NW., Suite 1100; Washington, DC 20006.

Synopsis: The agreement authorizes the parties to share vessels in the trade between ports in North Asia, South Asia, Middle East (including the Persian Gulf region), Spain, Italy, Egypt, Panama, Jamaica, and Canada, on the one hand, and U.S. East Coast ports via the Panama and Suez canals, on the other hand, as well as ports and points served via such U.S. and foreign ports.

Agreement No.: 012201.

Title: WWL/K-Line Space Charter Agreement.

Parties: Wallenius Wilhelmsen Logistics AS and Kawasaki Kisen Kaisha, Ltd.

Filing Party: John P. Meade, Esq.; General Counsel; K- Line America, Inc.; 6009 Bethlehem Road, Preston, MD 21655.

Synopsis: The agreement authorizes K-Line to charter space on WWL vessels in the trade between the U.S. East Coast and China.

Agreement No.: 012202.

Title: The G6/ELJSA Slot Exchange Agreement.

Parties: American President Lines, Ltd. and APL Co. Pte, Ltd. (Operating as one Party); Hapag-Lloyd AG; Hyundai Merchant Marine Co., Ltd.; Mitsui O.S.K. Lines, Ltd.; Nippon Yusen Kaisha; Orient Overseas Container Line, Limited.; and Evergreen Line Joint Service Agreement.

Filing Party: David F. Smith, Esq.; Cozen O'Connor; 1627 I Street NW., Suite 1100; Washington, DC 20006.

Synopsis: The agreement authorizes the parties to exchange slots in the trade between Vietnam, China (including Hong Kong), Singapore, Spain, and Sri Lanka, on the one hand, and the U.S. Atlantic Coast, on the other hand.

Agreement No.: 012203.

Title: The HMM/HLAG Slot Exchange Agreement.

Parties: Hyundai Merchant Marine Co., Ltd. and Hapag-Lloyd Aktiengesellschaft.

Filing Party: David F. Smith, Esq.; Cozen O'Connor; 1627 I Street NW., Suite 1100; Washington, DC 20006.

Synopsis: The agreement authorizes Hyundai to charter space to Hapag-Lloyd in the trade between the U.S. West Coast on the one hand, and China and South Korea, on the other hand. The agreement also authorizes the parties to enter into arrangements related to the chartering of such space.

By Order of the Federal Maritime Commission.

Dated: April 5, 2013.

Karen V. Gregory,

Secretary.

[FR Doc. 2013–08384 Filed 4–9–13; 8:45 am]

BILLING CODE P

FEDERAL MARITIME COMMISSION

Ocean Transportation Intermediary License Applicants

The Commission gives notice that the following applicants have filed an application for an Ocean Transportation Intermediary (OTI) license as a Non-Vessel-Operating Common Carrier (NVO) and/or Ocean Freight Forwarder (OFF) pursuant to section 19 of the Shipping Act of 1984 (46 U.S.C. 40101). Notice is also given of the filing of applications to amend an existing OTI license or the Qualifying Individual (QI) for a licensee.

Interested persons may contact the Office of Ocean Transportation Intermediaries, Federal Maritime Commission, Washington, DC 20573, by telephone at (202) 523–5843 or by email at *OTI@fmc.gov*.

American Cargocare, Inc. (NVO & OFF), 17100 Pioneer Blvd., Suite 255, Artesia, CA 90701, Officers: Nicholas L. Pullen, President (QI), Samakchai Tantisaree, Vice President, Application Type: New NVO & OFF License.

Dey Cargo Corporation dba Orient Grace Container Line (NVO & OFF), 510 Plaza Drive, Suite 1210, Atlanta, GA 30349, Officers: John J. Laird, Secretary (QI), Debra A. Watmore, President, Application Type: QI Change.

First Coast Cargo Group, Inc. (NVO & OFF), 5587 Commonwealth Avenue, Jacksonville, FL 32254, Officers: Dewey E. Painter, Chief Operations Officer (QI), Rosemary Myers, CEO, Application Type: New NVO & OFF License.

Full Hull Logistics, LLC (NVO & OFF), 17890 Cedarwood Drive, Riverside, CA 92803, Officers: Stanley J. Jozwiak, President (QI), Deborah Jozwiak, Vice President, Application Type: New NVO & OFF License.

Global Logistic Solution Center, LLC (NVO), 16520 Bake Parkway, Suite 150, Irvine, CA 92618, Officers: Mamdouh S. Mokhtar, Member (QI), Mohamed Hegazy, President, Application Type: New NVO License.

Graceworld Incorporation (NVO & OFF), 14023 Crenshaw Blvd., Suite 6, Hawthorne, CA 90250, Officers: Tracey Strine, CFO (QI), Ugochukwu O. Ene, President, Application Type: New NVO & OFF License.

ILE Global LLC (NVO & OFF), 181 S. Franklin Avenue, Suite 601, Valley Stream, NY 11581, Officers: Victor Pezzelato, Vice President (QI), Orit Horn, Managing Member, Application Type: Add NVO Service.

Intergroup Consolidators Inc. (NVO & OFF), 11119 NW 122nd Street, Medley, FL 33178, Officer: Raul E. Rodriguez, President (QI), Application Type: QI Change.

Morgan USA Logistics Inc (NVO), 16 Birchwood Park Drive, Syosset, NY 11791, Officer: Kit Hui, President (QI), Application Type: New NVO License.

Nema, Inc. (NVO & OFF), 2750 Breckinridge Blvd., Suite 100, Duluth, GA 30096, Officers: Christopher J. Reilly, Vice President (QI), Neal Baines, Chairman of the Board, Application Type: New NVO & OFF License.

Point Global Logistics, LLC (OFF), 157 Wilson Road, Fairview, NC 28730, Officers: Gustavo Kolmel, President (QI), Patricia Kolmel, Secretary, Application Type: New OFF License.

Seahorse Forwarding Ltd (NVO & OFF), One Euclid Road, Fort Lee, NJ 07024, Officers: Mary C. Sullivan, Vice President (QI), Chi W. Tang, President, Application Type: New NVO & OFF License.

Speedway USA, Inc. (NVO), 16210 S. Maple Avenue, Gardena, CA 90248, Officers: Han C. Kim, Secretary, (QI), Tae Y. Wi, President, Application Type: New NVO License.

Transcon Shipping Co., Inc. dba American Patriot Lines dba Transworld Shipping (NVO), 8616 La Tijera Blvd., Suite 401, Los Angeles, CA 90045, Officers: Terrence P. Lynch, President (QI), Dong H. Lee, Director, Application Type: Deleting Trade Names American Patriot Lines and Transworld Shipping.

WI Global Link Inc (OFF), 1940 NW 119th Street, Suite 801, Miami, FL 33167, Officers: Haydn Mitchell, Vice President (QI), Helen Mitchell, President, Application Type: New OFF License.

Dated: April 5, 2013.

By the Commission.

Karen V. Gregory,

Secretary.

[FR Doc. 2013–08388 Filed 4–9–13; 8:45 am]

BILLING CODE 6730–01–P

FEDERAL MARITIME COMMISSION

Ocean Transportation Intermediary License Reissuances

The Commission gives notice that the following Ocean Transportation Intermediary license has been reissued pursuant to section 19 of the Shipping Act of 1984 (46 U.S.C. 40101).

License No.: 016816N.

Name: Green Integrated Logistics, Inc.

Address: 16210 South Maple Avenue, Gardena, CA 90248.

Date Reissued: March 14, 2013.

Vern W. Hill,

Director, Bureau of Certification and Licensing.

[FR Doc. 2013–08386 Filed 4–9–13; 8:45 am]

BILLING CODE 6730–01–P

FEDERAL MARITIME COMMISSION

Ocean Transportation Intermediary License Revocations

The Commission gives notice that the following Ocean Transportation Intermediary licenses have been revoked pursuant to section 19 of the Shipping Act of 1984 (46 U.S.C. 40101) effective on the date shown.

License No.: 13355N.

Name: Oceanic Bridge International, Inc.

Address: 18725 East Gale Avenue, Suite 233, City of Industry, CA 91748.

Date Revoked: March 26, 2013.

Reason: Voluntary Surrender of License.

License No.: 022076NF.

Name: KT Logistics, Inc.

Address: 3470 W. 9th Street, Suite A, Upland, CA 91786.

Date Revoked: March 4, 2013.

Reason: Voluntary Surrender of License.

Vern W. Hill,

Director, Bureau of Certification and Licensing.

[FR Doc. 2013–08387 Filed 4–9–13; 8:45 am]

BILLING CODE 6730–01–P

FEDERAL MINE SAFETY AND HEALTH REVIEW COMMISSION

Sunshine Act Meeting

April 5, 2013.

TIME AND DATE: 10:00 a.m., Thursday, April 25, 2013.

PLACE: The Richard V. Backley Hearing Room, Room 511N, 1331 Pennsylvania Avenue NW., Washington, DC 20004 (entry from F Street entrance).

STATUS: Open.

MATTERS TO BE CONSIDERED: The Commission will consider and act upon the following in open session:*Mach Mining, LLC* v.*Secretary of Labor,*Docket No. LAKE 2009–324.(Issues include whether the Administrative Law Judge erred in concluding that the partial blocking of an escapeway did not constitute an ''unwarrantable failure to comply.'')

Any person attending this meeting who requires special accessibility features and/or auxiliary aids, such as sign language interpreters, must inform the Commission in advance of those needs. Subject to 29 CFR 2706.150(a)(3) and § 2706.160(d).

CONTACT PERSON FOR MORE INFO: Jean Ellen (202) 434–9950/(202) 708–9300 for TDD Relay/1–800–877–8339 for toll free.

Emogene Johnson,

Administrative Assistant.

[FR Doc. 2013–08449 Filed 4–8–13; 11:15 am]

BILLING CODE 6735–01–P

FEDERAL RESERVE SYSTEM

Agency Information Collection Activities: Announcement of Board Approval Under Delegated Authority and Submission to OMB

AGENCY: Board of Governors of the Federal Reserve System.

SUMMARY: Background. Notice is hereby given of the final approval of proposed information collections by the Board of Governors of the Federal Reserve System (Board) under OMB delegated authority, per 5 CFR 1320.16 (OMB Regulations on Controlling Paperwork Burdens on the Public). Board-approved collections of information are incorporated into the official OMB inventory of currently approved collections of information. Copies of the Paperwork Reduction Act Submission, supporting statements and approved collection of information instrument(s) are placed into OMB's public docket files. The Federal Reserve may not conduct or sponsor, and the respondent is not required to respond to, an information collection that has been extended, revised, or implemented on or after October 1, 1995, unless it displays a currently valid OMB control number.

FOR FURTHER INFORMATION CONTACT: Federal Reserve Board Clearance Officer, Cynthia Ayouch, Division of Research and Statistics, Board of Governors of the Federal Reserve System, Washington, DC 20551 (202) 452–3829. Telecommunications Device for the Deaf (TDD) users may contact (202) 263–4869, Board of Governors of the Federal Reserve System, Washington, DC 20551.

OMB Desk Officer, Shagufta Ahmed, Office of Information and Regulatory Affairs, Office of Management and Budget, New Executive Office Building, Room 10235, 725 17th Street, NW.,Washington, DC 20503.

Final approval under OMB delegated authority of the extension for three years, without revision, of the following reports:

1. *Report title:* Notice of Branch Closure.

Agency form number: FR 4031.

OMB control number: 7100–0264.

Frequency: On Occasion.

Reporters: State member banks.

Estimated annual reporting hours: 224 hours.

Estimated average hours per response: Reporting requirements, 2 hours; Disclosure requirements, customer mailing, 0.75 hours and posted notice, 0.25 hours; and Recordkeeping requirements, 8 hours.

Number of respondents: Reporting requirements, 72; Disclosure requirements, customer mailing, 72 and posted notice, 72; and Recordkeeping requirements, 1.

General description of report: This information collection is mandatory pursuant to Section 42(a)(1) of the Federal Deposit Insurance Act (FDI Act) (12 U.S.C. 1831r–l(a)(1)). The Federal Reserve does not consider individual respondent data to be confidential. However, a state member bank may request confidential treatment pursuant to exemption b(4) of the Freedom of Information Act (5 U.S.C.552(b)(4)).

Abstract: The mandatory reporting, recordkeeping, and disclosure requirements regarding the closing of any branch of an insured depository institution are imposed by section 228 of the FDI Act of 1991. There is no reporting form associated with the reporting portion of this information collection; state member banks notify the Federal Reserve by letter prior to closing a branch. The Federal Reserve uses the information to fulfill its statutory obligation to supervise state member banks.

Current Actions: On January 22, 2013, the Federal Reserve published a notice in the **Federal Register** (78 FR 4410) requesting public comment for 60 days on the extension, without revision, of the FR 4031. The comment period for this notice expired on March 25, 2013. The Federal Reserve did not receive any comments.

2. *Report title:* Reports Related to Securities Issued by State Member Banks as Required by Regulation H.

Agency form number: Reg H–1.

OMB control number: 7100–0091.

Frequency: Annually, Quarterly, and on occasion.

Reporters: State member banks.

Estimated annual reporting hours: 352 hours.

Estimated average hours per response: 5.17 hours.

Number of respondents: 4.

General description of report: This information collection is mandatory pursuant to sections 12(i) and 23(a)(1) of the Securities Exchange Act of 1934 (15 U.S.C. 781(i) and 78w (a)(1)) and Regulation H (12 CFR 208.36). The information collected is not given confidential treatment. However, a state member bank make request that a report or document not be disclosed to the public and be held confidential by the Federal Reserve, (12 CFR 208.36(d). All such requests for confidential treatment will be determined on an *ad hoc* basis.

Abstract: The Federal Reserve's Regulation H requires certain state member banks to submit information relating to their securities to the Federal Reserve on the same forms that bank holding companies and nonbank entities use to submit similar information to the Securities and Exchange Commission. The information is primarily used for public disclosure and is available to the public upon request.

Current Actions: On January 22, 2013, the Federal Reserve published a notice in the **Federal Register** (78 FR 4410) requesting public comment for 60 days on the extension, without revision, of the Reg H–1. The comment period for this notice expired on March 25, 2013. The Federal Reserve did not receive any comments.

Final approval under OMB delegated authority of the extension for three years, with revision, of the following survey:

Report title: Senior Credit Officer Opinion Survey on Dealer Financing Terms.

Agency form number: FR 2034.

OMB control number: 7100–0325.

Frequency: Up to six times a year.

Reporters: U.S. banking institutions and U.S. branches and agencies of foreign banks.

Estimated annual reporting hours: 450 hours.

Estimated average hours per response: 3 hours.

Number of respondents: 25.

General description of report: This information collection would be voluntary (12 U.S.C. 225a, 248(a)(2), 1844(c), and 3105(c)(2)) and would be given confidential treatment (5 U.S.C. 552(b)(4)).

Abstract: This voluntary survey collects qualitative and limited quantitative information from senior credit officers at responding financial institutions on (1) stringency of credit terms, (2) credit availability and demand across the entire range of securities financing and over-the-counter derivatives transactions, and (3) the evolution of market conditions and conventions applicable to such activities up to six times a year. Given the Federal Reserve's interest in financial stability, the information this survey collects is critical to the monitoring of credit markets and capital market activity. Aggregate survey results are made available to the public on the Federal Reserve Board Web site.[1] In addition, selected aggregate survey results may be published in *Federal Reserve Bulletin* articles and in the annual Monetary Policy Report to the Congress.

Current Actions: On January 28, 2013, the Federal Reserve published a notice in the **Federal Register** (78 FR 5803) requesting public comment for 60 days on the extension, with revision, of the FR 2034. The comment period for this notice expired on March 29, 2013. The Federal Reserve did not receive any comments. The revisions will be implemented as proposed effective with the June 2013 survey.

Board of Governors of the Federal Reserve System, April 4, 2013.

Margaret McCloskey Shanks,

Deputy Secretary of the Board.

[FR Doc. 2013–08264 Filed 4–9–13; 8:45 am]

BILLING CODE 6210–01–P

FEDERAL RESERVE SYSTEM

Change in Bank Control Notices; Acquisitions of Shares of a Bank or Bank Holding Company

The notificants listed below have applied under the Change in Bank Control Act (12 U.S.C. 1817(j)) and § 225.41 of the Board's Regulation Y (12 CFR 225.41) to acquire shares of a bank or bank holding company. The factors that are considered in acting on the notices are set forth in paragraph 7 of the Act (12 U.S.C. 1817(j)(7)).

The notices are available for immediate inspection at the Federal Reserve Bank indicated. The notices also will be available for inspection at the offices of the Board of Governors. Interested persons may express their views in writing to the Reserve Bank indicated for that notice or to the offices of the Board of Governors. Comments must be received not later than April 26, 2013.

A. Federal Reserve Bank of Chicago (Colette A. Fried, Assistant Vice President) 230 South LaSalle Street, Chicago, Illinois 60690–1414:

1. *Leland E. Boren,* Upland, Indiana, to acquire additional voting shares of Independent Alliance Banks, Inc., and thereby indirectly control IAB Financial Bank, both of Fort Wayne, Indiana.

[1] See *http://www.federalreserve.gov/econresdata/releases/scoos.htm*

Board of Governors of the Federal Reserve System, April 5, 2013.

Margaret McCloskey Shanks,

Deputy Secretary of the Board.

[FR Doc. 2013–08376 Filed 4–9–13; 8:45 am]

BILLING CODE 6210–01–P

FEDERAL RESERVE SYSTEM

Change in Bank Control Notices; Acquisitions of Shares of a Savings and Loan Holding Company

The notificants listed below have applied under the Change in Bank Control Act (12 U.S.C. 1817(j)) and the Board's Regulation LL (12 CFR part 238) to acquire shares of a savings and loan holding company. The factors that are considered in acting on the notices are set forth in paragraph 7 of the Act (12 U.S.C. 1817(j)(7)).

The notices are available for immediate inspection at the Federal Reserve Bank indicated. The notices also will be available for inspection at the offices of the Board of Governors. Interested persons may express their views in writing to the Reserve Bank indicated for that notice or to the offices of the Board of Governors. Comments must be received not later than April 26, 2013.

A. Federal Reserve Bank of Dallas (E. Ann Worthy, Vice President) 2200 North Pearl Street, Dallas, Texas 75201–2272:

1. *John C. Landers,* Houston, Texas, individually and as co-trustee of the Brittney Reimert Family Share Trust, the Chelsea Reimert Family Share Trust, and the Jeffery Reimert Family Share Trust, all of Houston, Texas, to acquire additional voting shares of Friendswood Capital Corporation, Webster, Texas, and thereby indirectly obtain control of Texan Bank, Sugar Land, Texas.

Board of Governors of the Federal Reserve System, April 5, 2013.

Margaret McCloskey Shanks,

Deputy Secretary of the Board.

[FR Doc. 2013–08375 Filed 4–9–13; 8:45 am]

BILLING CODE 6210–01–P

FEDERAL RESERVE SYSTEM

Formations of, Acquisitions by, and Mergers of Bank Holding Companies

The companies listed in this notice have applied to the Board for approval, pursuant to the Bank Holding Company Act of 1956 (12 U.S.C. 1841 *et seq.*) (BHC Act), Regulation Y (12 CFR part 225), and all other applicable statutes and regulations to become a bank holding company and/or to acquire the assets or the ownership of, control of, or the power to vote shares of a bank or bank holding company and all of the banks and nonbanking companies owned by the bank holding company, including the companies listed below.

The applications listed below, as well as other related filings required by the Board, are available for immediate inspection at the Federal Reserve Bank indicated. The applications will also be available for inspection at the offices of the Board of Governors. Interested persons may express their views in writing on the standards enumerated in the BHC Act (12 U.S.C. 1842(c)). If the proposal also involves the acquisition of a nonbanking company, the review also includes whether the acquisition of the nonbanking company complies with the standards in section 4 of the BHC Act (12 U.S.C. 1843). Unless otherwise noted, nonbanking activities will be conducted throughout the United States.

Unless otherwise noted, comments regarding each of these applications must be received at the Reserve Bank indicated or the offices of the Board of Governors not later than May 7, 2013.

A. Federal Reserve Bank of Kansas City (Dennis Denney, Assistant Vice President) 1 Memorial Drive, Kansas City, Missouri 64198–0001:

1. *CBTCO Bancorp and CBTCO Acquisition Inc.,* Columbus, Nebraska, to become bank holding companies by acquiring of 100 percent of the voting shares of Bradley Bancorp., parent of Columbus Bank and Trust Company, both in Columbus, Nebraska.

Board of Governors of the Federal Reserve System, April 5, 2013.

Margaret McCloskey Shanks,

Deputy Secretary of the Board.

[FR Doc. 2013–08374 Filed 4–9–13; 8:45 am]

BILLING CODE 6210–01–P

GENERAL SERVICES ADMINISTRATION

[Notice-MG–2013–01; Docket No. 2013–0002; Sequence 9]

Office of Federal High-Performance Green Buildings; Green Building Advisory Committee; Notification of Upcoming Public Advisory Committee Meeting

AGENCY: Office of Government-wide Policy, General Services Administration (GSA).

ACTION: Meeting notice.

SUMMARY: Notice of this meeting is being provided according to the requirements of the Federal Advisory Committee Act, 5 U.S.C. App., 10(a)(2). This notice provides the schedule and agenda for the May 1, 2013, meeting of the Green Building Advisory Committee Meeting (the Committee). The meeting is open to the public and the site is accessible to individuals with disabilities. Due to limited conference space, individuals must register to attend as instructed below under Supplementary Information.

DATES: *Effective date:* April 10, 2013.

Meeting date: The meeting will be held on Wednesday, May 1,2013 starting at 9:00 a.m. eastern standard time and ending no later than 3:00 p.m.

FOR FURTHER INFORMATION CONTACT: Ken Sandler, Designated Federal Officer, Office of Federal High-Performance Green Buildings, Office of Government-wide Policy, General Services Administration, 1275 First Street NE., Room 633D, Washington, DC 20417, telephone 202–219–1121 (note: this is not a toll-free number). Additional information about the Committee is available online at *http://www.gsa.gov/portal/content/121999.*

SUPPLEMENTARY INFORMATION:

Procedures for Providing Public Comments: Contact Ken Sandler at 202–219–1121 to register to attend and to comment during the meeting's public comment period. Registered speakers/organizations will be allowed a maximum of 5 minutes each and will need to provide written copies of their presentations. Requests to comment at the meeting must be received by 5:00 p.m. eastern standard time on Monday, April 29, 2013. Written comments may be provided to Mr. Sandler at *ken.sandler@gsa.gov* until 5:00 p.m. eastern standard time Monday, April 29, 2013.

Availability of Materials for the Meeting: Please contact Mr. Sandler at the email address above to register to attend this meeting and obtain meeting materials.

Materials may also be accessed online at *http://www.gsa.gov/portal/content/121999.* To attend this meeting, please submit your full name, organization, email address, and phone number to Ken Sandler by 5:00 p.m. eastern standard time on Monday, April 29, 2013.

Background: The Green Building Advisory Committee provides advice to GSA as specified in Public Law 110–140, as a mandatory Federal advisory committee. Under this authority, the Committee will advise GSA on the rapid transformation of the Federal building portfolio to sustainable technologies and practices. The Committee's focus is primarily on reviewing strategic plans, products and activities of the Office of

Federal High-Performance Green Buildings and providing advice regarding how the Office can most effectively accomplish its mission.

Agenda:

- Introductions & Plans for Today's Meeting.
- Climate Change Adaptation.
- Green Building Certification System Review.
- Lunch.
- Next Steps for the Committee.
- Public Comment Period: 30 minute public comment period for individuals pre-registered per instructions above. Each individual will be able to speak for no more than 5 minutes.
- Closing comments.

Meeting Access: The Committee will convene its meeting at: US Access Board Conference Room, 1331 F Street NW., Suite 800, Washington, DC 20004. Persons attending meetings in the Access Board's conference space are requested to refrain from using perfume, cologne, and other fragrances (see *http://www.access-board.gov/about/policies/fragrance.htm* for more information).

Dated: April 4, 2013.

Kevin Kampschroer,

Federal Director, Office of Federal High-Performance Green Buildings, Office of Government-wide Policy, General Services Administration.

[FR Doc. 2013–08280 Filed 4–9–13; 8:45 am]

BILLING CODE 6820–27–P

DEPARTMENT OF HEALTH AND HUMAN SERVICES

Office of the Secretary

[Document Identifier: HHS–OS–19226–60D]

Agency Information Collection Activities; Proposed Collection; Public Comment Request

AGENCY: Office of the Secretary, HHS.

ACTION: Notice.

SUMMARY: In compliance with section 3506(c)(2)(A) of the Paperwork Reduction Act of 1995, the Office of the Secretary (OS), Department of Health and Human Services, announces plans to submit an Information Collection Request (ICR), described below, to the Office of Management and Budget (OMB). The ICR is for extending the use of the approved information collection assigned OMB control number 0990–0275, which expires on October 31, 2013. Prior to submitting that ICR to OMB, OS seeks comments from the public regarding the burden estimate, below, or any other aspect of the ICR.

DATES: Comments on the ICR must be received on or before June 10, 2013.

ADDRESSES: Submit your comments to *Information.CollectionClearance@hhs.gov* or by calling (202) 690–6162.

FOR FURTHER INFORMATION CONTACT: Information Collection Clearance staff, *Information. CollectionClearance@hhs.gov* or (202) 690–6162.

SUPPLEMENTARY INFORMATION: When submitting comments or requesting information, please include the document identifier HHS–OS–19226–60D for reference.

Information Collection Request Title: Performance Data System (PDS).

OMB No.: 0990–0275.

Abstract: This request for clearance is to extend data collection activities by three (3) years for a currently approved collection using the OMB-approved Performance Data System (PDS), the tool used by Office of Minority Health (OMH) to collect program management and performance data for all OMH-funded projects. Grantee data collection via the Uniform Data Set (UDS) (original data collection system) was first approved by OMB on June 7, 2004 (OMB No. 0990–275). OMB approval was also received for modifications to the UDS to accommodate grant programs that were not required to use the UDS at the time the system was developed (August 23, 2007), which upgraded the data collection tool from the UDS to the PDS (August 31, 2010). Clearance is due to expire on October 31, 2013.

Need and Proposed Use of the Information: The clearance is also to continue data collection using the PDS, enhancing the system to improve functionality and to alter questions to improve data collection completeness and quality. The functionality and question improvements are intended to improve OMH's ability to comply with Federal reporting requirements and monitor and evaluate performance by enabling the efficient collection of more performance-oriented data which are tied to OMH-wide performance reporting needs. The ability to monitor and evaluate performance in this manner, and to work towards continuous program improvement are basic functions that OMH must be able to accomplish in order to carry out its mandate with the most effective and appropriate use of resources.

Likely Respondents: Respondents for this data collection include the project directors leading OMH-funded projects and/or the date entry persons assigned for each OMH-funded project. Affected public includes not-for-profit institutions and State, Local, or Tribal Governments.

Burden Statement: Burden in this context means the time expended by persons to generate, maintain, retain, disclose or provide the information requested. This includes the time needed to review instructions, to develop, acquire, install and utilize technology and systems for the purpose of collecting, validating and verifying information, processing and maintaining information, and disclosing and providing information, to train personnel and to be able to respond to a collection of information, to search data sources, to complete and review the collection of information, and to transmit or otherwise disclose the information. The total annual burden hours estimated for this ICR are summarized in the table below.

TOTAL ESTIMATED ANNUALIZED BURDEN—HOURS

	Type of respondent	Form name	Number of respondents	Number of responses per respondent	Average burden per response (in hours)	Total burden hours
PDS Burden	OMH Grantee	PDS	100	4	1.5	600

OS specifically requests comments on (1) the necessity and utility of the proposed information collection for the proper performance of the agency's functions, (2) the accuracy of the estimated burden, (3) ways to enhance the quality, utility, and clarity of the information to be collected, and (4) the use of automated collection techniques or other forms of information technology to minimize the information collection burden.

Keith A. Tucker,

Information Collection Clearance Officer.

[FR Doc. 2013–08397 Filed 4–9–13; 8:45 am]

BILLING CODE 4150–33–P

DEPARTMENT OF HEALTH AND HUMAN SERVICES

Centers for Disease Control and Prevention

Board of Scientific Counselors, Office of Infectious Diseases (BSC, OID)

In accordance with section 10(a)(2) of the Federal Advisory Committee Act (Pub. L. 92–463), the Centers for Disease Control and Prevention (CDC), announces the following meeting of the aforementioned committee:

Time and Date: 8:00 a.m.–3:30 p.m., May 8, 2013.

Place: CDC, Global Communications Center, 1600 Clifton Road, NE., Building 19, Auditorium B3, Atlanta, Georgia 30333.

Status: The meeting is open to the public, limited only by the space available.

Purpose: The BSC, OID provides advice and guidance to the Secretary, Department of Health and Human Services; the Director, CDC; the Director, OID; and the Directors of the National Center for Immunization and Respiratory Diseases, the National Center for Emerging and Zoonotic Infectious Diseases, and the National Center for HIV/AIDS, Viral Hepatitis, STD, and TB Prevention, CDC, in the following areas: strategies, goals, and priorities for programs; research within the national centers; and overall strategic direction and focus of OID and the national centers.

Matters To Be Discussed: The meeting will include reports from the BSC, OID working groups, brief updates on activities of the infectious disease national centers, and focused discussions on agency efforts in the following areas: (1) Reducing human papillomavirus and (2) building genomic and bioinformatics capacities.

Agenda items are subject to change as priorities dictate.

Contact Person For More Information: Robin Moseley, M.A.T., Designated Federal Officer, OID, CDC, 1600 Clifton Road NE., Mailstop D10, Atlanta, Georgia 30333, Telephone: (404) 639–4461.

The Director, Management Analysis and Services Office has been delegated the authority to sign Federal Register notices pertaining to announcements of meetings and other committee management activities, for both the Centers for Disease Control and Prevention and the Agency for Toxic Substances and Disease Registry.

Dana Redford.

Acting Director, Management Analysis and Services Office, Centers for Disease Control and Prevention.

[FR Doc. 2013–08336 Filed 4–9–13; 8:45 am]

BILLING CODE 4163–18–P

DEPARTMENT OF HEALTH AND HUMAN SERVICES

Centers for Disease Control and Prevention

Advisory Board on Radiation and Worker Health (ABRWH or Advisory Board), National Institute for Occupational Safety and Health (NIOSH)

In accordance with section 10(a)(2) of the Federal Advisory Committee Act (Pub. L. 92–463), the Centers for Disease Control and Prevention (CDC), announces the following meeting of the aforementioned committee:

Time and Date: 11:00 a.m.–3:00 p.m., May 2, 2013.

Place: Audio Conference Call via FTS Conferencing. The USA toll-free, dial-in number is 1–866–659–0537 and the pass code is 9933701.

Status: Open to the public, but without a verbal public comment period. Written comment should be provided to the contact person below in advance of the meeting.

Background: The Advisory Board was established under the Energy Employees Occupational Illness Compensation Program Act of 2000 to advise the President on a variety of policy and technical functions required to implement and effectively manage the new compensation program. Key functions of the Advisory Board include providing advice on the development of probability of causation guidelines, which have been promulgated by the Department of Health and Human Services (HHS) as a final rule; advice on methods of dose reconstruction, which have also been promulgated by HHS as a final rule; advice on the scientific validity and quality of dose estimation and reconstruction efforts being performed for purposes of the compensation program; and advice on petitions to add classes of workers to the Special Exposure Cohort (SEC).

In December 2000, the President delegated responsibility for funding, staffing, and operating the Advisory Board to HHS, which subsequently delegated this authority to the CDC. NIOSH implements this responsibility for CDC. The charter was issued on August 3, 2001, renewed at appropriate intervals, most recently, August 3, 2011, and will expire on August 3, 2013.

Purpose: This Advisory Board is charged with (a) providing advice to the Secretary, HHS, on the development of guidelines under Executive Order 13179; (b) providing advice to the Secretary, HHS, on the scientific validity and quality of dose reconstruction efforts performed for this program; and (c) upon request by the Secretary, HHS, advising the Secretary on whether there is a class of employees at any Department of Energy facility who were exposed to radiation but for whom it is not feasible to estimate their radiation dose, and on whether there is reasonable likelihood that such radiation doses may have endangered the health of members of this class.

Matters to Be Discussed: The agenda for the conference call includes: Subcommittee and Work Group Updates; SEC Petition Evaluations Update for the July 2013 Advisory Board Meeting; Plans for the July 2013 Advisory Board Meeting; and Advisory Board Correspondence.

The agenda is subject to change as priorities dictate.

Because there is not a public comment period, written comments may be submitted. Any written comments received will be included in the official record of the meeting and should be submitted to the contact person below in advance of the meeting.

Contact Person For More Information: Theodore M. Katz, M.P.A., Designated Federal Official, NIOSH, CDC, 1600 Clifton Rd. NE., Mailstop: E–20, Atlanta, GA 30333, Telephone (513)533–6800, Toll Free 1–800–CDC–INFO, Email *ocas@cdc.gov*.

The Director, Management Analysis and Services Office, has been delegated the authority to sign **Federal Register** notices pertaining to announcements of meetings and other committee management activities, for both the Centers for Disease Control and Prevention and the Agency for Toxic Substances and Disease Registry.

Dana Redford,

Acting Director, Management Analysis and Services Office, Centers for Disease Control and Prevention.

[FR Doc. 2013–08337 Filed 4–9–13; 8:45 am]

BILLING CODE 4163–18–P

DEPARTMENT OF HEALTH AND HUMAN SERVICES

Administration for Children and Families

[C.F.D.A. NUMBER: 93.671]

Funding Opportunity Announcement for Family Violence Prevention and Services/Grants for Domestic Violence Shelters/Grants to Native American Tribes (including Alaska Native Villages) and Tribal Organizations

AGENCY: Family and Youth Services Bureau (FYSB), Administration on Children, Youth, and Families (ACYF), ACF, HHS.

ACTION: This notice was originally published as Funding Opportunity Number HHS–2013–ACF–ACYF–FVPS–

0561 on March 5, 2013 at *http://www.acf.hhs.gov/grants/open/foa/view/HHS-2013-ACF-ACYF-FVPS-0561.*

SUMMARY: This announcement governs the proposed award of formula grants under the Family Violence Prevention and Services Act (FVPSA) to Native American Tribes (including Alaska Native Villages) and Tribal organizations. The purpose of these grants is to assist Tribes in efforts to increase public awareness about, and primary and secondary prevention of family violence, domestic violence, and dating violence and to provide immediate shelter and supportive services for victims of family violence, domestic violence, or dating violence, and their dependents. This announcement sets forth the application requirements, the application process, and other administrative and fiscal requirements for grants in Fiscal Year 2013. Grantees are to be mindful that although the expenditure period for grants is a two-year period, an application is required each year to provide continuity in the provision of services.

Statutory Authority: Section 309 of the Family Violence Prevention and Services Act, as amended by Section 201 of the CAPTA Reauthorization Act of 2010, Pub.L. 111–320.

SUPPLEMENTARY INFORMATION:

I. Funding Opportunity Description

Description

Background

The Administration on Children, Youth and Families (ACYF) is committed to facilitating healing and recovery and promoting the social and emotional well-being of victims, children, youth, and families who have experienced domestic violence, maltreatment, exposure to violence, and trauma. This FVPSA funding opportunity announcement, administered through ACYF's Family and Youth Services Bureau (FYSB) is designed to assist Tribes in their efforts to support the establishment, maintenance, and expansion of programs and projects: (1) to prevent incidents of family violence, domestic violence, and dating violence; (2) to provide immediate shelter, supportive services, and access to community-based programs for victims of family violence, domestic violence, or dating violence, and their dependents; and (3) to provide specialized services for children exposed to family violence, domestic violence, or dating violence, underserved populations, and victims who are members of racial and ethnic minority populations (section 10406 (a).

Tribes face unique circumstances and obstacles when responding to family violence. The particular legal relationship of the United States to Indian Tribes creates a Federal trust responsibility to assist Tribal governments in safeguarding the lives of Indian victims of family violence.

The Department of Health and Human Services (HHS) consulted with Tribal governments regarding this grant program and the issue of violence against women. In FY 2012, the Administration for Children and Families (ACF) consulted with Tribal governments on all of the grant programs administered by ACF. In addition, ACYF representatives consulted during the Inter-Departmental Tribal Justice Safety and Wellness Consultation on FVPSA issues.

During FY 2012, HHS awarded FVPSA grants to 141 Tribes or Tribal organizations in support of 224 Tribes; 55 States and Territories; and 55 non-profit State Domestic Violence Coalitions. In addition, HHS awarded FVPSA grants to one National Indian Resource Center addressing Domestic Violence and Safety for Indian Women, and other national, special issue and culturally specific resource centers, and the National Domestic Violence Hotline.

Ensuring the Well-Being of Vulnerable Children and Families/Adults

ACYF is committed to facilitating healing and recovery and promoting the social and emotional well-being of children, youth, and families/adults who have experienced maltreatment, exposure to violence, and/or trauma. This funding opportunity announcement and other spending this fiscal year are designed to ensure that effective interventions are in place to build skills and capacities that contribute to the healthy, positive, and productive functioning of families.

Children, youth, adults and families who have experienced maltreatment, exposure to violence, and/or trauma are impacted along several domains, each of which must be addressed in order to foster social and emotional well-being and promote healthy, positive functioning:

- *Understanding Experiences:* A fundamental aspect of the human experience is the development of a world view through which one's experiences are understood. Whether that perspective is generally positive or negative impacts how experiences are interpreted and integrated. For example, one is more likely to approach a challenge as a surmountable, temporary obstacle if his or her frame includes a sense that ''things will turn out alright.'' On the contrary, negative experiences can color how future experiences are understood. Ongoing exposure to family violence might lead children, youth, and families/adults to believe that relationships are generally hostile in nature and affect their ability to enter into and stay engaged in safe and healthy relationships. Interventions should seek to address how children, youth, adults and families frame what has happened to them in the past and shape their beliefs about the future.
- *Developmental Tasks:* People grow physically and psychosocially along a fairly predictable course, encountering normal challenges and establishing competencies as they pass from one developmental stage to another. However, adverse events have a marked effect on the trajectory of normal social and emotional development, delaying the growth of certain capacities, and, in many cases, accelerating the maturation of others. Intervention strategies must be attuned to the developmental impact of negative experiences and address related strengths and deficits to ensure children, youth, adults and families develop along a healthy trajectory.
- *Coping Strategies:* The methods that children, youth, adults and families develop to manage challenges both large and small are learned in childhood, honed in adolescence, and practiced in adulthood. Those who have been presented with healthy stressors and opportunities to overcome them with appropriate encouragement and support are more likely to have an array of positive, productive coping strategies available to them as they go through life. For children, youth, adults and families who grow up in or currently live in unsafe, unpredictable environments, the coping strategies that may have been protective in that context may not be appropriate for safer, more regulated situations. Interventions should help children, youth, adults and families transform maladaptive coping methods into healthier, more productive strategies.
- *Protective Factors:* A wealth of research has demonstrated that the presence of certain contextual factors (e.g., supportive relatives, involvement in after-school activities) and characteristics (e.g., self-esteem, relationship skills) can moderate the impacts of past and future negative experiences. These protective factors are fundamental to resilience; building them is integral to successful intervention with children, youth, adults and families.

The skills and capacities in these areas support children, youth, adults and families as challenges, risks, and opportunities arise. In particular, each domain impacts the capacity of children, youth, adults and families to establish and maintain positive relationships with caring adults and supportive peers. The necessity of these relationships to social and emotional well-being and lifelong success in school, community, and at home cannot be overstated and should be central to all interventions with vulnerable children, youth, adults and families.

An important component of promoting social and emotional well-being includes addressing the impact of trauma, which can have a profound effect on the overall functioning of children, youth, adults and families. ACYF promotes a trauma-informed approach, which involves understanding and responding to the symptoms of chronic interpersonal trauma and traumatic stress across the domains outlined above, as well as the behavioral and mental health consistency of trauma.

ACYF anticipates a continued focus on social and emotional well-being as a critical component of its overall mission to ensure positive outcomes for all children, youth, adults and families. Tribal grantees have a critical role in incorporating ACYF priorities by helping to ensure trauma-informed interventions are embedded within the service provision framework of all services funded by FVPSA. Tribes and Tribal organizations are strongly encouraged to leverage the expertise of the FVPSA-funded National Indigenous Women's Resource Center on Domestic Violence and the National Center on Domestic Violence, Trauma and Mental Health to infuse programs with best and promising practices on trauma-informed interventions to support the social and emotional well-being of families seeking shelter and supportive services.

Use of Funds

Grantees should ensure that not less than 70 percent of the funds distributed are used for the primary purpose of providing immediate shelter and supportive services to adult and youth victims of family violence, domestic violence, or dating violence and their dependents; not less than 25 percent of the funds will be used for the purpose of providing supportive services and prevention services (section 10408(b)). FVPSA funds awarded to grantees should be used for activities described in (section 10408(b)):

Shelter

- Provision of immediate shelter and related supportive services to adult and youth victims of family violence, domestic violence, or dating violence, and their dependents, including paying for the operating and administrative expenses of the facilities for such shelter.

Supportive Services

- Provision of individual and group counseling, peer support groups, and referral to community-based services to assist family violence, domestic violence, and dating violence victims, and their dependents, in recovering from the effects of the violence.
- Provision of services, training, technical assistance, and outreach to increase awareness of family violence, domestic violence, and dating violence, and increase the accessibility of family violence, domestic violence, and dating violence services.
- Provision of culturally and linguistically appropriate services.
- Provision of services for children exposed to family violence, domestic violence, or dating violence, including age-appropriate counseling, supportive services, and services for the non-abusing parent that support that parent's role as a caregiver, which may, as appropriate, include services that work with the non-abusing parent and child together.
- Provision of advocacy, case management services, and information and referral services, concerning issues related to family violence, domestic violence, or dating violence intervention and prevention, including: (1) Assistance in accessing related Federal and State financial assistance programs; (2) legal advocacy to assist victims and their dependents; (3) medical advocacy, including provision of referrals for appropriate health care services (including mental health, alcohol, and drug abuse treatment), but which shall not include reimbursement for any health care services; (4) assistance locating and securing safe and affordable permanent housing and homelessness prevention services; (5) transportation, child care, respite care, job training and employment services, financial literacy services and education, financial planning and related economic empowerment services; and (6) parenting and other educational services for victims and their dependents.
- Provision of prevention services, including outreach to underserved populations.
- Assistance in developing safety plans, and supporting efforts of victims of family violence, domestic violence, or dating violence to make decisions related to their ongoing safety and well-being.

Annual FVPSA Tribal Grantee Meeting

FVPSA Tribal grantees must plan to attend the annual grantee meeting and may use grant funding to support the travel of up to two participants. The meeting is a training and technical assistance activity focusing on FVPSA administrative issues as well as the promotion of evidence informed and promising practices to address family violence, domestic violence and dating violence. Subsequent correspondence will advise the FVPSA Tribal grantees of the date, time and location of their grantee meeting.

Client Confidentiality

In order to ensure the safety of adult, youth, and child victims of family violence, domestic violence, or dating violence, and their families, FVPSA-funded programs must establish and implement policies and protocols for maintaining the confidentiality of records pertaining to any individual provided domestic violence services. Consequently, when providing statistical data on program activities and program services, individual identifiers of client records will not be used (section 10406(c)(5)).

In the annual grantee Performance Progress Report (PPR), grantees must collect unduplicated data from each program. No client level data should be shared with a third party, regardless of encryption, hashing, or other data security measures, without a written, time-limited release as described in section 10406(c)(5). The address or location of any FVPSA-supported shelter facility shall, except with written authorization of the person or persons responsible for the operation of such shelter, not be made public (section 10406(c)(5)(H)) and the confidentiality of records pertaining to any individual provided domestic violence services by any FVPSA-supported program will be strictly maintained.

Coordinated and Accessible Services

The impacts of family violence may include physical injury and death of primary or secondary victims, psychological trauma, isolation from family and friends, harm to children living with a parent or caretaker who is either experiencing or perpetrating family violence, increased fear, reduced mobility, damaged credit, employment and financial instability, homelessness, substance abuse, chronic illnesses, and a host of other health and related mental

health consequences. In Tribal communities, these dynamics may be compounded by barriers such as the isolation of vast rural areas, the concern for safety in isolated settings, lack of housing and shelter options, and the transportation requirements over long distances. These factors heighten the need for the coordination of the services through an often limited delivery system. To help bring about a more effective response to the problem of family violence, domestic violence, or dating violence, HHS urges Tribes and Tribal organizations receiving funds under this grant announcement to coordinate activities and related issues and to consider joining a consortium of Tribes to coordinate service delivery where appropriate.

It is essential that community service providers are involved in the design and improvement of intervention and prevention activities. Coordination and collaboration among victim services providers; community-based, culturally specific, and faith-based services providers; housing and homeless services providers; and Tribal, Federal, State, and local public officials and agencies are needed to provide more responsive and effective services to victims of family violence, domestic violence, and dating violence, and their families.

To promote a more effective response to family violence, domestic violence, and dating violence, HHS requires States receiving FVPSA funds to collaborate with State Domestic Violence Coalitions, Tribes, Tribal organizations, service providers, and community-based organizations to address the needs of family violence, domestic violence, and dating violence victims, particularly for those who are members of racial and ethnic minority populations and underserved populations (section 10407(a)(2)).

To serve victims most in need and to comply with Federal law, services must be widely accessible. Services must not discriminate on the basis of age, disability, sex, race, color, national origin, or religion (section 10406(c)(2)). The HHS Office for Civil Rights provides guidance to grantees in complying with civil rights laws that prohibit discrimination on these bases. Please see *www.hhs.gov/ocr/civilrights/understanding/index.html.* HHS also provides guidance to recipients of federal financial assistance on meeting the legal obligation to take reasonable steps to provide meaningful access to federally assisted programs by persons with limited English proficiency. Please see *www.hhs.gov/ocr/civilrights/resources/laws/revisedlep.html.* Additionally, HHS provides guidance regarding access to HHS-funded services for immigrant survivors of domestic violence. Please see *www.hhs.gov/ocr/civilrights/resources/specialtopics/origin/domesticviolencefactsheet.html.*

Services must also be provided on a voluntary basis; receipt of emergency shelter or housing must not be conditioned on participation in supportive services (section 10408(d)).

Definitions

Tribes and Tribal organizations should use the following definitions in carrying out their programs.

Dating Violence: Violence committed by a person who is or has been in a social relationship of a romantic or intimate nature with the victim and where the existence of such a relationship shall be determined based on a consideration of the length of the relationship, the type of relationship, and the frequency of interaction between the persons involved in the relationship.

Domestic Violence: Felony or misdemeanor crimes of violence committed by a current or former spouse of the victim, by a person with whom the victim shares a child in common, by a person who is cohabitating with or has cohabitated with the victim as a spouse, by a person similarly situated to a spouse of the victim under the domestic or family violence laws of the jurisdiction receiving grant monies, or by any other person against an adult or youth victim who is protected from that person's acts under the domestic or family violence laws of the jurisdiction.

Family Violence: Any act or threatened act of violence, including any forceful detention of an individual, which (a) results or threatens to result in physical injury; and (b) is committed by a person against another individual (including an elderly person) to whom such person is, or was, related by blood or marriage, or otherwise legally related, or with whom such person is, or was, lawfully residing.

Indian Tribe: Any Indian Tribe, band, nation, or other organized group or community, including any Alaska Native village or regional or village corporation as defined in or established pursuant to the Alaska Native Claims Settlement Act (43 U.S.C. § 1601 et seq.), which is recognized as eligible for the special programs and services provided by the United States to Indians because of their status as Indians.

Personally Identifying Information or Personal Information: Any individually identifying information for or about an individual, including information likely to disclose the location of a victim of domestic violence, dating violence, sexual assault, or stalking, including: a first and last name, a home or other physical address, contact information (including a postal, email or Internet protocol address, or telephone or facsimile number), a social security number and any other information, including date of birth, racial or ethnic background, or religious affiliation, that, in combination with any of the above identifiers, would serve to identify any individual.

Shelter: The provision of temporary refuge and supportive services in compliance with applicable State law and regulation governing the provision, on a regular basis, of shelter, safe homes, meals, and supportive services to victims of family violence, domestic violence, or dating violence, and their dependents.

State Domestic Violence Coalition: A statewide nonprofit private domestic violence service organization that has a membership that includes a majority of the primary-purpose domestic violence service providers in the State; has board membership representative of primary purpose domestic violence service providers and the communities in which the services are being provided in the State; has as its purpose to provide education, support, and technical assistance to such service providers to enable the providers to establish and maintain shelter and supportive services for victims of domestic violence and their dependents; and serves as an information clearinghouse, primary point of contact, and resource center on domestic violence for the State and supports the development of policies, protocols and procedures to enhance domestic violence intervention and prevention in the State.

Supportive Services: Services for adult and youth victims of family violence, domestic violence, or dating violence, and their dependents. Such services are designed to meet the needs of such victims for short-term, transitional, or long-term safety and provide counseling, advocacy, or assistance for victims of family violence, domestic violence, or dating violence, and their dependents.

Tribal Consortium: Groups of Tribes who agree to apply for and administer a single FVPSA grant with one Tribe or Tribal organization responsible for grant administration. In a Tribal consortium, the population of all of the Tribes involved is used to calculate the award amount. The allocations for each of the Tribes included in the consortium are combined to determine the total grant for the consortium.

Tribally Designated Official: An individual designated by an Indian Tribe, Tribal organization, or nonprofit private organization authorized by an Indian Tribe to administer a grant.

Tribal Organization: The recognized governing body of any Indian Tribe; any legally established organization of Indians that is controlled, sanctioned, or chartered by such governing body or which is democratically elected by the adult members of the Indian community to be served by such organization, and that includes the maximum participation of Indians in all phases of its activities. In any case where a contract is let or grant made to an organization to perform services benefiting more than one Indian Tribe, the approval of each such Indian Tribe shall be a prerequisite to the letting or making of such contract or grant.

Underserved Populations: Populations underserved because of geographic location, underserved racial and ethnic populations, populations underserved because of special needs (such as language barriers, disabilities, alienage status, or age), and any other population determined to be underserved by the Attorney General or by the Secretary of HHS, as appropriate.

II. Award Information

Subject to the availability of Federal appropriations and as authorized by law, in FY 2013, ACYF will allocate 10 percent of the appropriation available under section 10403(a) to Tribes and Tribal organizations for the establishment and operation of shelters, safe houses, and the provision of supportive services for victims of family violence, domestic violence, or dating violence, and their dependents.

HHS will also make available funds to States to support local domestic violence programs to provide immediate shelter and supportive services for adult and youth victims of family violence, domestic violence, or dating violence, and their dependents; State Domestic Violence Coalitions to provide technical assistance and training, advocacy services, among other activities with local domestic violence programs; the national resource centers, special issue resource centers and culturally specific resource centers; the National Domestic Violence Hotline; and to support discretionary projects including training and technical assistance, collaborative projects with advocacy organizations and service providers, data collection efforts, public education activities, research, and other demonstration projects.

In computing tribal allocations, ACF will use the latest available population figures from the Census Bureau. The latest Census population counts may be viewed at: *www.census.gov*. Where Census Bureau data are unavailable, ACF will use figures from the Bureau of Indian Affairs' (BIA's) Indian Population and Labor Force Report, which is available at: *www.bia.gov/WhatWeDo/Knowledge/Reports/index.htm.*

The funding formula for the allocation of family violence funds is based upon the Tribe's population. The formula has two parts, the Tribal population base allocation and a population category allocation.

The base allocations are determined by a Tribe's population and a funds allocation schedule. Tribes with populations between 1 and 50,000 people receive a $2,500 base allocation for the first 1,500 people. For each additional 1,000 people above the 1,500 person minimum, a Tribe's base allocation is increased $1,000. Tribes with populations between 50,001 to 100,000 people receive base allocations of $125,000, and Tribes with a population of 100,001 to 150,000 receive a base allocation of $175,000.

Once the base allocations have been distributed to the Tribes that have applied for FVPSA funding, the ratio of the Tribal population category allocation to the total of all base allocations is then considered in allocating the remainder of the funds. By establishing base amounts with distribution of proportional amounts for larger Tribes, FYSB is balancing the need for basic services for all Tribes with the greater demand for services among Tribes with larger populations. In FY 2012, actual grant awards ranged from $14,897–$1,675,967.

Tribes are encouraged to apply for FVPSA funding as a consortium (see *Section I. Definitions*). The allocations for each of the Tribes included in the consortium will be combined to determine the total grant for the consortium.

Length of Project Periods

FVPSA Tribal formula grant awards are for a 2-year period. The project period for this award is from October 1, 2012–September 30, 2014.

Expenditure Period

The project period under this program announcement is 24 months. The FVPSA funds may be used for expenditures starting October 1 of each fiscal year for which they are granted, and will be available for expenditure through September 30 of the following fiscal year; i.e., FY 2013 funds may be used for expenditures from October 1, 2012, through September 30, 2014. For example:

Award year (Federal Fiscal Year (FY))	Project period (24 Months)	Application requirements and expenditure periods
FY 2013	10/01/2012–9/30/2014	Regardless of the date the award is received, these funds may be expended by the grantee for obligations incurred since October 1, 2012. The funds may be expended through September 30, 2014.

Re-allotted funds, if any, are available for expenditure until the end of the fiscal year following the fiscal year that the funds became available for re-allotment. FY 2013 grant funds that are made available to Tribes and Tribal organizations through re-allotment must be expended by the grantee no later than September 30, 2014.

III. Eligibility Information

Tribes, Tribal organizations and nonprofit private organizations authorized by a Tribe, as defined in *Section I* of this announcement, are eligible for funding under this program. A Tribe has the option to authorize a Tribal organization or a nonprofit private organization to submit an application and administer the grant funds awarded under this grant (section 10409(b)). Tribes may apply singularly or as a consortium with other Tribes.

Additional Information on Eligibility

DUNS Number Requirement

Data Universal Numbering System (DUNS) Number is the nine-digit, or thirteen-digit (DUNS + 4), number established and assigned by Dun and Bradstreet, Inc. (D&B) to uniquely identify business entities.

All applicants and sub-recipients must have a DUNS number at the time of application in order to be considered for a grant or cooperative agreement. A

DUNS number is required whether an applicant is submitting a paper application or using the Government-wide electronic portal, *www.Grants.gov.* A DUNS number is required for every application for a new award or renewal/continuation of an award, including applications or plans under formula, entitlement, and block grant programs. A DUNS number may be acquired at no cost online at *http://fedgov.dnb.com/webform.* To acquire a DUNS number by phone, contact the D&B Government Customer Response Center:

U.S. and U.S. Virgin Islands: 1–866–705–5711.

Alaska and Puerto Rico: 1–800–234–3867 (Select Option 2, then Option 1). Monday–Friday 7 a.m. to 8 p.m., CST.

The process to request a DUNS Number by telephone will take between 5 and 10 minutes.

SAM Requirement (*www.Sam.gov*)

The System for Award Management (SAM) at *www.sam.gov* is a new system that consolidates the capabilities of a number of systems that support Federal procurement and award processes. Phase 1 of SAM includes the capabilities previously provided via Central Contractor Registration (CCR)/Federal Agency Registration (FedReg), Online Representations and Certifications Application (ORCA), and the Excluded Parties List System (EPLS).

SAM is the Federal registrant database and repository into which an entity must provide information required for the conduct of business as a recipient. The former CCR Web site is no longer be available. All information previously held in the Central Contractor Registration (CCR) system has been migrated to SAM.gov.

Applicants may register at *www.sam.gov* or by phone at 1–866–606–8220. Registration assistance is available through the ''Help'' tab at *www.sam.gov* or by phone at 1–866–606–8220.

Applicants are strongly encouraged to register at SAM well in advance of the application due date. Registration at SAM.gov must be updated annually.

Note: It can take 24 hours or more for updates to registrations at SAM.gov to take effect. An entity's registration will become active after 3–5 days. Therefore, c*heck for active registration well before the application due date and deadline.* An applicant can view their registration status by visiting *http://www.bpn.gov/CCRSearch/Search.aspx* and searching by their organization's DUNS number.

See the SAM Quick Guide for Grantees at *https://www.sam.gov/sam/transcript/SAM_Quick_Guide_Grants_Registrations-v1.6.pdf.* HHS requires all entities that plan to apply for, and ultimately receive, Federal grant funds from any HHS Agency, or receive subawards directly from recipients of those grant funds to:

- Be registered in at Sam.gov prior to submitting an application or plan;
- Maintain an active registration at *www.sam.gov* with current information at all times during which it has an active award or an application or plan under consideration by an HHS agency; and
- Provide its active DUNS number in each application or plan it submits to an HHS agency.

ACF is prohibited from making an award to an applicant that has not complied with these requirements. If, at the time an award is ready to be made, if the intended recipient has not complied with these requirements, ACF:

- May determine that the applicant is not qualified to receive an award; and
- May use that determination as a basis for making an award to another applicant

IV. Application Requirements

Forms, Assurances, Certifications, and Policy

Applicants seeking financial assistance under this announcement must submit the listed Standard Forms (SFs), assurances, certifications and policy. All required Standard Forms, assurances, and certifications are available at *ACF Funding Opportunities Forms* or at the *Grants.gov Forms Repository* unless specified otherwise.

Forms/certifications	Description	Where found
Certification Regarding Lobbying.	Required of all applicants at the time of their application. If not available with the application, it must be submitted prior to the award of the grant.	Available at *www.acf.hhs.gov/grants/grants_resources.html.*
SF–LLL—Disclosure of Lobbying Activities.	If any funds have been paid or will be paid to any person for influencing or attempting to influence an officer or employee of any agency, a Member of Congress, an officer or employee of Congress, or an employee of a Member of Congress in connection with this commitment providing for the United States to insure or guarantee a loan, the applicant shall complete and submit the SF–LLL, ''Disclosure Form to Report Lobbying,'' in accordance with its instructions. Applicants must furnish an executed copy of the Certification Regarding Lobbying prior to award.	''Disclosure Form to Report Lobbying'' is available at *www.acf.hhs.gov/grants-forms.*
Survey on Ensuring Equal Opportunity for Applicants.	Non-profit private organizations (not including private universities) are encouraged to submit the survey with their applications. Submission of the survey is voluntary. Applicants applying electronically may submit the survey along with the application as part of an appendix or as a separate document. Hard copy submissions should include the survey in a separate envelope.	Available at *www.acf.hhs.gov/grants/grants_resources.html.*
The needs of lesbian, gay, bisexual, transgender, and questioning youth are taken into consideration in applicants program design..	See Appendix B for submission requirements.	See Appendix B for the complete policy description.

Assurances and Policy

Each applicant must provide signed copy of both the assurance and policy. (See Appendices A and B)

The Project Description

The content of the application should include the following in this order:

A. Cover Letter

The cover letter of the application should include the following information:

(1) The name of the Tribe, Tribal organization, or nonprofit private organization applying for the FVPSA grant and the mailing address.

(2) The name of the Tribally Designated Official authorized to administer this grant, along with the telephone number, fax number, and email address.

(3) The name of a Program Contact designated to administer coordination of the programming, including the telephone number, fax number, and email address.

(4) The Employee Identification Number (EIN) of the applicant organization submitting the application.

(5) The D–U–N–S number of the applicant organization submitting the application (see *Section III. Eligibility*).

(6) The signature of the Tribally Designated Official (see *Section I. Definitions*).

B. Program and Project Description

(1) A description of the service area(s) and population(s) to be served.

(2) A description of the services to be provided with FVPSA funds.

(3) A description of barriers that challenge the effectiveness of the operation of the program and/or services provided to victims of domestic violence, family violence and dating violence and their dependents.

(4) A description of the technical assistance needed to address the described barriers.

C. Capacity

A description of the applicant's operation of and/or capacity to carry out a FVPSA program. This might be demonstrated in ways such as the following:

(1) The current operation of a shelter, safe house, or domestic and dating violence prevention program;

(2) The establishment of joint or collaborative service agreements with a local public agency or a private non-profit agency for the operation of family violence, domestic violence, or dating violence activities or services; or

(3) The operation of other social services programs.

D. Services to be Provided

A description of the activities and services to be provided, including:

(1) How the grant funds will be used to provide shelter, supportive services, and prevention services for victims of family violence, domestic violence, and dating violence. Please note that for the purposes of this grant, domestic violence does not include services targeted solely to address child abuse and neglect.

(2) How the services are designed to reduce family violence, domestic violence, and dating violence.

(3) A plan describing how the organization will provide specialized services for children exposed to family violence, domestic violence, or dating violence.

(4) An explanation of how the program plans to evaluate the services to determine effectiveness.

(5) A description of how the funds are to be spent. For example, a half-time Domestic Violence Advocate and costs for transportation to shelter.

E. Involvement of Individuals and Organizations

A description of the procedures designed to involve knowledgeable individuals and interested organizations in providing services under FVPSA. For example, knowledgeable individuals and interested organizations may include Tribal officials or social services staff involved in family violence prevention, Tribal law enforcement officials, representatives of State or Tribal Domestic Violence Coalitions, and operators of domestic violence shelters and service programs.

F. Involvement of Community-based Organizations

(1) A description of how the applicant will involve community-based organizations whose primary purpose is to provide culturally appropriate services to underserved populations.

(2) A description of how these community-based organizations can assist the Tribe in addressing the unmet needs of such populations.

G. Current Signed Tribal Resolution

A copy of a current Tribal Resolution or an equivalent document that:

(1) Covers the entirety of FY 2013, including a date when the resolution or equivalent document expires, which can be no more than 5 years.

(2) States that the Tribe or Tribal organization has the authority to submit an application on behalf of the individuals in the Tribe(s) and to administer programs and activities funded.

Note: An applicant that received no funding in the immediately preceding fiscal year must submit a new Tribal resolution or its equivalent. An applicant funded as part of a consortium in the immediately preceding year that is now seeking funds as a single Tribe must also submit a new resolution or its equivalent. Likewise, an applicant funded as a single Tribe in the immediately preceding fiscal year that is now seeking funding as a part of a consortium must submit a new resolution or its equivalent. In addition to 1 and 2 above, new resolutions should state the Tribal service area and the primary services to be provided by the Tribe or Tribal organization under this grant.

H. Policies and Procedures

Written documentation of the policies and procedures developed and implemented, including copies of the policies and procedures, to ensure that the safety and confidentiality of clients and their dependents served is maintained as described in *Section I.*

Paperwork Reduction Disclaimer

As required by the Paperwork Reduction Act, 44 U.S.C. §§ 3501–3520, the public reporting burden for the project description is estimated to average 10 hours per response, including the time for reviewing instructions, gathering and maintaining the data needed, and reviewing the collection of information. The Project Description information collection is approved under OMB control number 0970–0280, which expires November 30, 2014. An agency may not conduct or sponsor, and a person is not required to respond to, a collection of information unless it displays a currently valid OMB control number.

Intergovernmental Review of Federal Programs

The review and comment provisions of the Executive Order (E.O.) 12372 and Part 100 do not apply. Federally recognized Tribes are exempt from all provisions and requirements of E.O. 12372.

Funding Restrictions

The Consolidated Appropriations Act, 2012 (Pub.L. 112–74), enacted December 23, 2011, limited the salary amount that could be awarded and charged to ACF mandatory and discretionary grants. Public Law 112–175 extended this salary limitation through the earlier of March 27, 2013 or enactment of the relevant FY 2013 appropriations statue(s). Accordingly, award funds issued under this announcement may not be used to pay the salary, or any percentage of salary, to an individual at a rate in excess of Executive Level II. The Executive Level II salary of the Federal Executive Pay scale is $179,700 (*www.opm.gov/oca/12tables/html/ex.asp*). This amount reflects an individual's base salary *exclusive* of fringe benefits and any income that an individual may be permitted to earn outside of the duties to the applicant organization. This salary limitation also applies to subawards/subcontracts under an ACF mandatory and discretionary grant.

Application Submission

Applications should be sent or delivered to: Family Violence Prevention and Services Program, Family and Youth Services Bureau, Administration on Children, Youth and Families, Administration for Children and Families, Attention: Shena R. Williams, 1250 Maryland Avenue, SW., Suite 8213, Washington, DC 20024.

V. Award Administration Information

Administrative and National Policy Requirements

Awards issued under this announcement are subject to the uniform administrative requirements and cost principles of 45 CFR § 74 (Uniform Administrative Requirements for Awards and Subawards to Institutions of Higher Education, Hospitals, Other Nonprofit Organizations, and Commercial Organizations) or 45 CFR§ 92 (Uniform Administrative Requirements for Grants and Cooperative Agreements to State, Local, and Tribal Governments). The Code of Federal Regulations (CFR) is available at *www.gpo.gov.*

An application funded with the release of Federal funds through a grant award, does not constitute, or imply, compliance with Federal regulations. Funded organizations are responsible for ensuring that their activities comply with all applicable federal regulations.

Equal Treatment for Faith-Based Organizations

Grantees are also subject to the requirements of 45 C.F.R. Part 87.1(c), Equal Treatment for Faith-Based Organizations, which says, ''Organizations that receive direct financial assistance from the [Health and Human Services] Department under any Department program may not engage in inherently religious activities such as religious instruction, worship, or proselytization as part of the programs or services funded with direct financial assistance from the Department.'' Therefore, organizations must take steps to completely separate the presentation of any program with religious content from the presentation of the Federally funded program by time or location *in such a way that it is clear that the two programs are separate and distinct.* If separating the two programs by time but presenting them in the same location, one program must *completely* end before the other program begins.

A faith-based organization receiving HHS funds retains its independence from Federal, State, and local governments, and may continue to carry out its mission, including the definition, practice, and expression of its religious beliefs. For example, a faith-based organization may use space in its facilities to provide secular programs or services funded with Federal funds without removing religious art, icons, scriptures, or other religious symbols. In addition, a faith-based organization that receives Federal funds retains its authority over its internal governance, and it may retain religious terms in its organization's name, select its board members on a religious basis, and include religious references in its organization's mission statements and other governing documents in accordance with all program requirements, statutes, and other applicable requirements governing the conduct of HHS funded activities.

Regulations pertaining to the Equal Treatment for Faith-Based Organizations, which includes the prohibition against Federal funding of inherently religious activities, Understanding the Regulations Related to the Faith-Based and Neighborhood Partnerships Initiative'' are available at *http://www.hhs.gov/partnerships/about/regulations/.* Additional information, resources, and tools for faith-based organizations is available through The Center for Faith-based and Neighborhood Partnerships Web site at *http://www.hhs.gov/partnerships/index.html* and at the *Administration for Children & Families: Toolkit for Faith-based and Community Organizations.*

Requirements for Drug-Free Workplace

The Drug-Free Workplace Act of 1988 (41 U.S.C. § 8102 et seq.) requires that all organizations receiving grants from any Federal agency agree to maintain a drug-free workplace. By signing the application, the Authorizing Official agrees that the grantee will provide a drug-free workplace and will comply with the requirement to notify ACF if an employee is convicted of violating a criminal drug statute. Failure to comply with these requirements may be cause for debarment. Government wide requirements for Drug-Free Workplace for Financial Assistance are found in 2 CFR part 182; HHS implementing regulations are set forth in 2 CFR part 382.400. All recipients of ACF grant funds must comply with the requirements in Subpart B—Requirements for Recipients Other Than Individuals, 2 CFR part 382.225. The rule is available at *http://ecfr.gpoaccess.gov/cgi/t/text/text-idx?c=ecfr;sid=18b5801410be6af416dc258873ffb7ec;rgn=div2;view=text;node=20091112%3A1.1;idno=49;cc=ecfr.*

Debarment and Suspension

HHS regulations published in 2 CFR part 376 implement the government-wide debarment and suspension system guidance (2 CFR part 180) for HHS' non-procurement programs and activities. ''Non-procurement transactions'' include, among other things, grants, cooperative agreements, scholarships, fellowships, and loans. ACF implements the HHS Debarment and Suspension regulations as a term and condition of award. Grantees may decide the method and frequency by which this determination is made and may check the Excluded Parties List System (EPLS) located at *www.sam.gov,* although checking the EPLS is not required. More information is available at *www.acf.hhs.gov/grants/grants_resources.html.*

Pro-Children Act

The Pro-Children Act of 2001, 20 U.S.C. §§ 7181 through 7184, imposes restrictions on smoking in facilities where federally funded children's services are provided. HHS grants are subject to these requirements only if they meet the Act's specified coverage. The Act specifies that smoking is prohibited in any indoor facility (owned, leased, or contracted for) used for the routine or regular provision of kindergarten, elementary, or secondary education or library services to children under the age of 18. In addition, smoking is prohibited in any indoor facility or portion of a facility (owned, leased, or contracted for) used for the routine or regular provision of federally funded health care, day care, or early childhood development, including Head Start services to children under the age of 18. The statutory prohibition also applies if such facilities are constructed, operated, or maintained with Federal funds. The statute does not apply to children's services provided in private residences, facilities funded solely by Medicare or Medicaid funds, portions of facilities used for inpatient drug or alcohol treatment, or facilities where WIC coupons are redeemed. Failure to comply with the provisions of the law may result in the imposition of a civil monetary penalty of up to $1,000 per violation and/or the imposition of an administrative compliance order on the responsible entity.

Approval/Disapproval of an Application

The Secretary of HHS shall approve any application that meets the requirements of FVPSA and this announcement. The Secretary shall not disapprove an application unless the Secretary gives the applicant reasonable

notice of the Secretary's intention to disapprove and a 6-month period providing an opportunity for correction of any deficiencies. The Secretary shall give such notice within 45 days after the date of submission of the application if any of the provisions of the application have not been satisfied. If the Tribe does not correct the deficiencies in such application within the 6-month period following the receipt of the Secretary's notice, the Secretary shall withhold payment of any grant funds to such Tribe until such date as the Tribe provides documentation that the deficiencies have been corrected.

VI. Reporting Requirements

Performance Progress Reports (PPR)

ACF grantees must submit a PPR using the standardized format provided by FVPSA and approved by OMB (0970–0280). This report will describe the grant activities carried out during the year, report the number of people served, and contain an evaluation of the effectiveness of such activities. Consortia grantees should compile the information into a comprehensive PPR for submission. A copy of the PPR is available on the FYSB Web site at: *www.acf.hhs.gov/programs/fysb/resource/ppr-tribal-fvpsa.*

PPRs for Tribes and Tribal organizations are due on an annual basis at the end of the calendar year (December 30) and will cover from October 1 through September 30. Grantees should submit their reports online through the Online Data Collection (OLDC) system at the following address: *https://extranet.acf.hhs.gov/ssi* with a copy sent to: Family Violence Prevention and Services Program, Family and Youth Services Bureau, Administration on Children, Youth and Families, Administration for Children and Families, Attention: Shena R. Williams, 1250 Maryland Avenue SW., Room 8213, Washington, DC 20024, Phone: (202) 205–5932, Email: *Shena.Williams@acf.hhs.gov.*

Federal Financial Reports (FFR)

Grantees must submit annual Financial Status Reports. The first SF–425A is due December 30, 2012. The final SF–425A is due December 30, 2013. SF–425A can be found at: *www.whitehouse.gov/omb/grants/grants_forms.html, www.forms.gov.* Completed reports may be mailed to: Deborah Bell, Division of Mandatory Grants, Office of Grants Management, Administration for Children and Families, 370 L'Enfant Promenade SW., 6th Floor, Washington, DC 20447.

Grantees have the option of submitting their reports online through the Online Data Collection (OLDC) system at the following address: *https://extranet.acf.hhs.gov/ssi.*

Failure to submit reports on time may be a basis for withholding grant funds, or suspension or termination of the grant. All funds reported as unobligated after the obligation period will be recouped.

VII. FFATA Subaward and Executive Compensation

Awards issued as a result of this funding opportunity may be subject to the Transparency Act subaward and executive compensation reporting requirements of 2 CFR § 170. See ACF's *Award Term for Federal Financial Accountability and Transparency Act (FFATA) Subaward and Executive Compensation Reporting Requirement* implementing this requirement and additional award applicability information.

ACF has implemented the use of the SF–428 *Tangible Property Report* and the SF–429 *Real Property Status Report* for all grantees. Both standard forms are available at *www.whitehouse.gov/omb/grants_forms/.*

VIII. Agency Contact

Program Office Contact

Shena R. Williams, Program Specialist at (202) 205–5932 or email at *Shena.Williams@acf.hhs.gov.*

Grants Management Contact

Deborah Bell, Division of Mandatory Grants at (202) 401–4611 or email at *Deborah.Bell@acf.hhs.gov*

IX. Appendices

A. Assurances of Compliance with Grant Requirements
B. LGBTQ (also known as ''Two-Spirited'') Accessibility Policy

Application Due Date: May 6, 2013.

FOR FURTHER INFORMATION CONTACT: Shena R. Williams at (202) 205–5932 or email at *Shena.Williams@acf.hhs.gov.*

Bryan Samuels,

Commissioner, Administration on Children, Youth and Families.

Appendix A

Assurances of Compliance With Grant Requirements

The grantee certifies that it will comply with the following assurances under the Family Violence Prevention and Services Act, 42 U.S.C. § 10401, et seq. (cited herein by the applicable section number only):

(1) Family Violence Prevention and Services Act (FVPSA) grant funds will be used to provide shelter, supportive services or prevention services to adult and youth victims of family violence, domestic violence, or dating violence and their dependents (section 10408(b)(1)).

(2) Not less than 70 percent of the funds distributed shall be for the primary purpose of providing immediate shelter and supportive services as defined in section 10402(9) and (12) to adult and youth victims of family violence, domestic violence or dating violence as defined in section 10402(2), (3) and (4), and their dependents (section 10408(b)(2)).

(3) Not less than 25 percent of the funds distributed shall be for the purpose of providing supportive services and prevention services as described in section 10408(b)(1)(B) through (H), to victims of family violence, domestic violence, or dating violence, and their dependents (section 10408(b)(2)).

(4) Grant funds will not be used as direct payment to any victim of family violence, domestic violence, or dating violence, or to any dependent of such victim (section 10408(d)(1)).

(5) No income eligibility standard will be imposed on individuals with respect to eligibility for assistance or services supported with funds appropriated to carry out the FVPSA (section 10406(c)(3)).

(6) No fees will be levied for assistance or services provided with funds appropriated to carry out the FVPSA (section 10406(c)(3)).

(7) The address or location of any shelter or facility assisted under the FVPSA that otherwise maintains a confidential location will, except with written authorization of the person or persons responsible for the operation of such shelter, not be made public (section 10406(c)(5)(H)).

(8) Procedures are established to ensure compliance with the provisions of section 10406(c)(5) regarding non-disclosure of confidential of private information (section 10407(a)(2)(A)).

(9) Pursuant to Section 10406(c)(5), comply with the new FVPSA provisions regarding non-disclosure of confidential or private information. As such, the applicant will comply with additional requirements imposed by that section which include but are not limited to: (A) grantees shall not disclose any personally identifying information collected in connection with services requested (including services utilized or denied), through grantee's funded activities or reveal personally identifying information without informed, written, reasonably time-limited consent by the person about whom information is sought, whether for the FVPSA funded activities or any other Federal or State program (additional consent requirements have been omitted *but see section 10406(c)(5)(B)(ii)(I)* for further requirements); (B) grantees may not release information compelled by statutory or court order unless adhering to the requirements of section 10406(c)(5)(C); (C) grantees may share non-personally identifying information in the aggregate for the purposes enunciated in section 10406(c)(5)(D)(i) as well as for other purposes found in section 10406(c)(5)(D)(ii) and (iii).

(10) As prescribed by section 10406(c)(2) of the FVPSA, the Tribe will use grant funds in a manner which avoids prohibited

discrimination on the basis of age, disability, sex, race, color, national origin, or religion.

(11) Funds made available under the FVPSA will be used to supplement and not supplant other Federal, State and local public funds expended to provide services and activities that promote the objectives of the FVPSA (section 10406(c)(6)).

(12) Receipt of supportive services under the FVPSA will be voluntary. No condition will be applied for the receipt of emergency shelter (section 10408(d)(2)).

(13) The Tribe has a law or procedure to bar an abuser from a shared household or a household of the abused person, which may include eviction laws or procedures (section 10407(a)(2)(H)).

Tribally Designated Official

Tribe or Tribal Organization

Appendix B

LGBTQ (also known as ''Two-Spirited'') Accessibility Policy

As the Authorized Organizational Representative (AOR) signing this application on behalf of

[*Insert full, formal name of applicant organization*]

I hereby attest and certify that:

The needs of lesbian, gay, bisexual, transgender, and questioning (also known as ''Two-Spirited'') program participants are taken into consideration in applicant's program design. Applicant considered how its program will be inclusive of and non-stigmatizing toward such participants. If not already in place, awardee and, if applicable, sub-awardees must establish and publicize policies prohibiting harassment based on race, sexual orientation, gender, gender identity (or expression), religion, and national origin. The submission of an application for this funding opportunity constitutes an assurance that applicants have or will put such policies in place within 12 months of the award. Awardees should ensure that all staff members are trained to prevent and respond to harassment or bullying in all forms during the award period. Programs should be prepared to monitor claims, address them seriously, and document their corrective action(s) so all participants are assured that programs are safe, inclusive, and non-stigmatizing by design and in operation. In addition, any sub-awardees or subcontractors:

- Have in place or will put into place within 12 months of the award policies prohibiting harassment based on race, sexual orientation, gender, gender identity (or expression), religion, and national origin;
- Will enforce these policies;
- Will ensure that all staff will be trained during the award period on how to prevent and respond to harassment or bullying in all forms, and;
- Have or will have within 12 months of the award, a plan to monitor claims, address them seriously, and document their corrective action(s).

Insert Date of Signature:

Print Name and Title of the AOR:

Signature of AOR:

[FR Doc. 2013–08275 Filed 4–9–13; 8:45 am]

BILLING CODE 4184–32–P

DEPARTMENT OF HEALTH AND HUMAN SERVICES

Food and Drug Administration

[Docket No. FDA–2013–N–0377]

Agency Information Collection Activities; Proposed Collection; Comment Request; Tobacco Health Document Submission

AGENCY: Food and Drug Administration, HHS.

ACTION: Notice.

SUMMARY: The Food and Drug Administration (FDA) is announcing an opportunity for public comment on the proposed collection of certain information by the Agency. Under the Paperwork Reduction Act of 1995 (the PRA), Federal Agencies are required to publish notice in the **Federal Register** concerning each proposed collection of information, including each proposed extension of an existing collection of information, and to allow 60 days for public comment in response to the notice. This notice solicits comments on the collection of health documents that were created during the period of June 23, 2009, through December 31, 2009.

DATES: Submit either electronic or written comments on the collection of information by June 10, 2013.

ADDRESSES: Submit electronic comments on the collection of information to *http://www.regulations.gov*. Submit written comments on the collection of information to the Division of Dockets Management (HFA–305), Food and Drug Administration, 5630 Fishers Lane, rm. 1061, Rockville, MD 20852. All comments should be identified with the docket number found in brackets in the heading of this document.

FOR FURTHER INFORMATION CONTACT: Daniel Gittleson, Office of Information Management, Food and Drug Administration, 1350 Piccard Dr., PI50–400B, Rockville, MD 20850, 301–796–5156, *daniel.gittleson@fda.hhs.gov.*

SUPPLEMENTARY INFORMATION: Under the PRA (44 U.S.C. 3501–3520), Federal Agencies must obtain approval from the Office of Management and Budget (OMB) for each collection of information they conduct or sponsor. ''Collection of information'' is defined in 44 U.S.C. 3502(3) and 5 CFR 1320.3(c) and includes Agency requests or requirements that members of the public submit reports, keep records, or provide information to a third party. Section 3506(c)(2)(A) of the PRA (44 U.S.C. 3506(c)(2)(A)) requires Federal Agencies to provide a 60-day notice in the **Federal Register** concerning each proposed collection of information, including each proposed extension of an existing collection of information, before submitting the collection to OMB for approval. To comply with this requirement, FDA is publishing notice of the proposed collection of information set forth in this document.

With respect to the following collection of information, FDA invites comments on these topics: (1) Whether the proposed collection of information is necessary for the proper performance of FDA's functions, including whether the information will have practical utility; (2) the accuracy of FDA's estimate of the burden of the proposed collection of information, including the validity of the methodology and assumptions used; (3) ways to enhance the quality, utility, and clarity of the information to be collected; and (4) ways to minimize the burden of the collection of information on respondents, including through the use of automated collection techniques, when appropriate, and other forms of information technology.

Tobacco Health Document Submission—(OMB Control Number 0910–0654)—Extension

On June 22, 2009, the President signed the Family Smoking Prevention and Tobacco Control Act (Tobacco Control Act) (Pub. L. 111–31) into law. The Tobacco Control Act amended the Federal Food, Drug, and Cosmetic Act (the FD&C Act) by adding, among other things, a new chapter granting FDA important authority to regulate the manufacture, marketing, and distribution of tobacco products to protect the public health generally and to reduce tobacco use by minors. The Tobacco Control Act created many new requirements for the tobacco industry. Section 101 of the Tobacco Control Act amended the FD&C Act by adding, among other things, section 904(a)(4) (21 U.S.C. 387d(a)(4)).

Section 904(a)(4) of the FD&C Act requires each tobacco product manufacturer or importer, or agent thereof, to submit all documents developed after June 22, 2009, ''that relate to health, toxicological, behavioral, or physiologic effects of current or future tobacco products, their constituents (including smoke constituents), ingredients, components, and additives'' (herein referred to as ''tobacco health documents'').

FDA announced the availability of a guidance on this collection in the **Federal Register** of April 20, 2010 (75 FR 20606), and requested tobacco health documents that were created during the period from June 23, 2009, through December 31, 2009. The guidance stated that information required under section 904(a)(4) must be submitted to FDA beginning December 22, 2009. Further, FDA stated it would publish a revised guidance specifying the timing of subsequent reporting. FDA is in the process of revising the April 2010 guidance but will continue collecting documents created during the specified period for any manufacturers, importers, or their agents who still have documents to submit.

FDA has been collecting the information submitted pursuant to section 904(a)(4) through a facilitative electronic form and through a paper form (Form FDA 3743) for those individuals who choose not to use the electronic method. In both forms, FDA is requesting the following information from firms that have not already reported or still have documents to report:

- Submitter identification: Submitter type, company name, address, country, company headquarters Dun and Bradstreet number, and company headquarters Facility Establishment Identifier number;
- Submitter point of contact: Contact name, title, position title, email, telephone, and fax; and
- Submission format and contents (as applicable):
  - Electronic documents: Media type, media quantity, size of submission, quantity of documents, file type, and file software;
  - Paper documents: Quantity of documents, quantity of volumes, and quantity of boxes; and
  - Whether or not a submission is being provided.
- Confirmation statement (with identification and signature of submitter including name, company name, address, position title, email, telephone, and fax); and
- Document categorization (as applicable): Relationship of the document or set of documents to the following:
  - Health, behavioral, toxicological, or physiological effects;
  - Specific current or future tobacco product(s);
  - Class of current or future tobacco product(s);
  - Specific ingredient(s), constituent(s), component(s), or additive(s);
  - Class of ingredient(s), constituent(s), component(s), or additive(s).
- Document readability and accessibility: Keywords; glossary or explanation of any abbreviations, jargon, or internal (e.g., code) names; special instructions for loading or compiling submission; and
- Document metadata: Date document was created, document author(s), document recipient(s), document custodian, document title or identification number, beginning and ending Bates numbers, and Bates number ranges for documents attached to a submitted email.

In addition to the electronic and paper forms, the guidance that FDA issued in April 2010 (75 FR 20606) was intended to assist persons making tobacco health document submissions. For further assistance, FDA is providing a technical guide, embedded hints, and a Web tutorial on the electronic portal.

The estimated 50 hours per response burden is based on the average burden estimate among all 4 respondents. Therefore, on an individual basis, the actual burden per respondent may be higher or lower than the 50 hours estimate because it is an average value. FDA currently is evaluating the classification/coding recommendations and will revisit this issue in future guidance. The number of documents received each year since the original collection period has fallen to less than 5 percent of the number received in the original collection period. FDA expects this is because documents created within the specified period have already been submitted. Also, the number of respondents who still have documents to submit has decreased. Therefore, FDA estimates the biannual burden of the continuation of this collection to be at most, 5 percent of the original burden.

FDA estimates the burden of this collection of information as follows:

TABLE 1—ESTIMATED ANNUAL REPORTING BURDEN [1]

Activity	Number of respondents	Number of responses per respondent	Total annual responses	Average burden per response	Total hours
Tobacco Health Document Submissions and Form FDA 3743	4	2	8	50	400

[1] There are no capital costs or operating and maintenance costs associated with this collection of information.

Dated: April 4, 2013.

Leslie Kux,

Assistant Commissioner for Policy.

[FR Doc. 2013–08315 Filed 4–9–13; 8:45 am]

BILLING CODE 4160–01–P

DEPARTMENT OF HEALTH AND HUMAN SERVICES

Health Resources and Services Administration

Agency Information Collection Activities: Submission to OMB for Review and Approval; Public Comment Request

ACTION: Notice.

SUMMARY: In compliance with section 3506(c)(2)(A) of the Paperwork Reduction Act of 1995 (44 U.S.C. Chapter 35), the Health Resources and Services Administration (HRSA) will submit an Information Collection Request (ICR) to the Office of Management and Budget (OMB). Comments submitted during the first public review of this ICR will be provided to OMB. OMB will accept further comments from the public during the review and approval period. To request a copy of the clearance requests submitted to OMB for review, email *paperwork@hrsa.gov* or call the HRSA Reports Clearance Office at (301) 443–1984.

Information Collection Request Title: Corps Community Day Event Form (OMB No. 0915–xxxx)—[NEW]

Abstract: Corps Community Day was created in 2011 and celebrates the

National Health Service Corps (NHSC) every October during National Primary Care Week. The NHSC is a program administered by the Bureau of Clinician Recruitment and Service (BCRS) within HRSA. The goals of Corps Community Day encompass the following: increase awareness of the NHSC to potential applicants and the greater primary health community; create a sense of community and connectedness among NHSC program participants, alumni, partners, and staff; and underscore the NHSC's role in bringing primary health care services to the nation's neediest communities. Current program participants, alumni, NHSC Ambassadors, sites, primary care organizations, and professional associations plan events and report the details of their events to BCRS so that they can be added to the state-by-state map of events. In order to avoid duplication of effort, eliminate confusion regarding allowable event dates, avoid data entry errors, and implement a brief post-event satisfaction survey, BCRS would like to implement a standard form that event planners will use to report to BCRS. The fillable form will be available online and will have less than 20 fields for event planners to populate to submit for inclusion on the map. There will also be approximately 5 fields to populate following the event to measure satisfaction. Both the pre-event and post-event data fields will be held in one form.

Burden Statement: Burden in this context means the time expended by persons to generate, maintain, retain, disclose or provide the information requested. This includes the time needed to review instructions, to develop, acquire, install and utilize technology and systems for the purpose of collecting, validating and verifying information, processing and maintaining information, and disclosing and providing information, to train personnel and to be able to respond to a collection of information, to search data sources, to complete and review the collection of information, and to transmit or otherwise disclose the information. The total annual burden hours estimated for this ICR are summarized in the table below.

The annual estimate of burden is as follows:

Form name	Number of respondents	Responses per respondent	Total responses	Hours per response	Total burden hours
Corps Community Day Event Planning Form	300	1	300	.066	20
Corps Community Day Event Satisfaction Form	300	1	300	.033	10
Total	300		300		30 hours

ADDRESSES: Submit your comments to the desk officer for HRSA, either by email to *OIRA_submission@omb.eop.gov* or by fax to 202–395–5806. Please direct all correspondence to the ''attention of the desk officer for HRSA.''

Deadline: Comments on this ICR should be received within 30 days of this notice.

Dated: April 4, 2013.

Bahar Niakan,

Director, Division of Policy and Information Coordination.

[FR Doc. 2013–08348 Filed 4–9–13; 8:45 am]

BILLING CODE 4165–15–P

DEPARTMENT OF HEALTH AND HUMAN SERVICES

National Institutes of Health

National Institute of Diabetes and Digestive and Kidney Diseases; Notice of Closed Meetings

Pursuant to section 10(d) of the Federal Advisory Committee Act, as amended (5 U.S.C. App.), notice is hereby given of the following meetings.

The meetings will be closed to the public in accordance with the provisions set forth in sections 552b(c)(4) and 552b(c)(6), Title 5 U.S.C., as amended. The grant applications and the discussions could disclose confidential trade secrets or commercial property such as patentable material, and personal information concerning individuals associated with the grant applications, the disclosure of which would constitute a clearly unwarranted invasion of personal privacy.

Name of Committee: National Institute of Diabetes and Digestive and Kidney Diseases Special Emphasis Panel; Glucose Regulation.

Date: June 5, 2013.

Time: 2:00 p.m. to 4:00 p.m.

Agenda: To review and evaluate grant applications.

Place: National Institutes of Health, Two Democracy Plaza, 6707 Democracy Boulevard, Bethesda, MD 20892, (Telephone Conference Call).

Contact Person: D. G. Patel, PhD., Scientific Review Officer, Review Branch, DEA, NIDDK, National Institutes of Health, Room 756, 6707 Democracy Boulevard, Bethesda, MD 20892–5452, (301) 594–7682, *pateldg@niddk.nih.gov*.

Name of Committee: National Institute of Diabetes and Digestive and Kidney Diseases Special Emphasis Panel; Fellowships in Digestive Diseases and Nutrition.

Date: June 13, 2013.

Time: 8:00 a.m. to 4:00 p.m.

Agenda: To review and evaluate grant applications.

Place: St. Gregory Hotel, 2033 M Street NW., Washington, DC 20036.

Contact Person: Thomas A. Tatham, PhD., Scientific Review Officer, Review Branch, DEA, NIDDK, National Institutes of Health, Room 760, 6707 Democracy Boulevard, Bethesda, MD 20892–5452, (301) 594–3993, *tathamt@mail.nih.gov*.

(Catalogue of Federal Domestic Assistance Program Nos. 93.847, Diabetes, Endocrinology and Metabolic Research; 93.848, Digestive Diseases and Nutrition Research; 93.849, Kidney Diseases, Urology and Hematology Research, National Institutes of Health, HHS)

Dated: April 4, 2013.

David Clary,

Program Analyst, Office of Federal Advisory Committee Policy.

[FR Doc. 2013–08285 Filed 4–9–13; 8:45 am]

BILLING CODE 4140–01–P

DEPARTMENT OF HEALTH AND HUMAN SERVICES

National Institutes of Health

National Center for Complementary & Alternative Medicine; Notice of Closed Meeting

Pursuant to section 10(d) of the Federal Advisory Committee Act, as amended (5 U.S.C. App.), notice is hereby given of the following meeting.

The meeting will be closed to the public in accordance with the provisions set forth in sections 552b(c)(4) and 552b(c)(6), Title 5 U.S.C., as amended. The grant applications and the discussions could disclose

confidential trade secrets or commercial property such as patentable material, and personal information concerning individuals associated with the grant applications, the disclosure of which would constitute a clearly unwarranted invasion of personal privacy.

Name of Committee: National Center for Complementary and Alternative Medicine Special Emphasis Education Panel.

Date: June 21, 2013.

Time: 8:00 a.m. to 7:00 p.m.

Agenda: To review and evaluate grant applications.

Place: Marriott Courtyard Gaithersburg Washingtonian Ctr, 204 Boardwalk Place, Gaithersburg, MD 20878.

Contact Person: Peter Kozel, PhD., Scientific Review Officer, NCCAM, 6707 Democracy Boulevard, Suite 401, Bethesda, MD 20892–5475, 301–496–8004, *kozelp@mail.nih.gov*.

(Catalogue of Federal Domestic Assistance Program Nos. 93.213, Research and Training in Complementary and Alternative Medicine, National Institutes of Health, HHS)

Dated: April 4, 2013.

Michelle Trout,

Program Analyst, Office of Federal Advisory Committee Policy.

[FR Doc. 2013–08286 Filed 4–9–13; 8:45 am]

BILLING CODE 4140–01–P

DEPARTMENT OF HEALTH AND HUMAN SERVICES

National Institutes of Health

National Human Genome Research Institute; Notice of Closed Meeting

Pursuant to section 10(d) of the Federal Advisory Committee Act, as amended (5 U.S.C. App.), notice is hereby given of the following meeting.

The meeting will be closed to the public in accordance with the provisions set forth in sections 552b(c)(4) and 552b(c)(6), Title 5 U.S.C., as amended. The grant applications and the discussions could disclose confidential trade secrets or commercial property such as patentable material, and personal information concerning individuals associated with the grant applications, the disclosure of which would constitute a clearly unwarranted invasion of personal privacy.

Name of Committee: Center for Inherited Disease Research Access Committee.

Date: April 26, 2013.

Time: 3:00 p.m. to 4:00 p.m.

Agenda: To review and evaluate grant applications.

Place: National Human Genome Research Institute, Suite 4076, 5635 Fisher's Lane, Bethesda, MD 20892 (Telephone Conference Call).

Contact Person: Camilla E. Day, PhD., Scientific Review Officer, CIDR, National Human Genome Research Institute, National Institutes of Health, 5635 Fishers Lane, Suite 4075, Bethesda, MD 20892, 301–402–8837, *camilla.day@nih.gov*.

This notice is being published less than 15 days prior to the meeting due to the timing limitations imposed by the review and funding cycle.

(Catalogue of Federal Domestic Assistance Program Nos. 93.172, Human Genome Research, National Institutes of Health, HHS)

Dated: April 4, 2013.

David Clary,

Program Analyst, Office of Federal Advisory Committee Policy.

[FR Doc. 2013–08288 Filed 4–9–13; 8:45 am]

BILLING CODE 4140–01–P

DEPARTMENT OF HEALTH AND HUMAN SERVICES

National Institutes of Health

Eunice Kennedy Shriver National Institute of Child Health & Human Development; Notice of Closed Meeting

Pursuant to section 10(d) of the Federal Advisory Committee Act, as amended (5 U.S.C. App.), notice is hereby given of the following meeting.

The meeting will be closed to the public in accordance with the provisions set forth in sections 552b(c)(4) and 552b(c)(6), Title 5 U.S.C., as amended. The grant applications and the discussions could disclose confidential trade secrets or commercial property such as patentable material, and personal information concerning individuals associated with the grant applications, the disclosure of which would constitute a clearly unwarranted invasion of personal privacy.

Name of Committee: National Institute of Child Health and Human Development Special Emphasis Panel; Rehabilitation Research Grant Applications.

Date: April 29, 2013.

Time: 11:00 a.m. to 2:00 p.m.

Agenda: To review and evaluate grant applications.

Place: National Institutes of Health, Room 5B01J, 6100 Executive Boulevard, Rockville, MD 20852, (Telephone Conference Call).

Contact Person: Anne Krey, PhD., Scientific Review Officer, Division of Scientific Review, Eunice Kennedy Shriver National Institute of Child Health And Human Development, NIH, 6100 Executive Blvd., Room 5B01, Bethesda, MD 20892, 301–435–6908, *ak41o@nih.gov*.

(Catalogue of Federal Domestic Assistance Program Nos. 93.864, Population Research; 93.865, Research for Mothers and Children; 93.929, Center for Medical Rehabilitation Research; 93.209, Contraception and Infertility Loan Repayment Program, National Institutes of Health, HHS)

Dated: April 4, 2013.

Michelle Trout,

Program Analyst, Office of Federal Advisory Committee Policy.

[FR Doc. 2013–08287 Filed 4–9–13; 8:45 am]

BILLING CODE 4140–01–P

DEPARTMENT OF HEALTH AND HUMAN SERVICES

Substance Abuse and Mental Health Services Administration

Agency Information Collection Activities: Proposed Collection; Comment Request

In compliance with Section 3506(c)(2)(A) of the Paperwork Reduction Act of 1995 concerning opportunity for public comment on proposed collections of information, the Substance Abuse and Mental Health Services Administration (SAMHSA) will publish periodic summaries of proposed projects. To request more information on the proposed projects or to obtain a copy of the information collection plans, call the SAMHSA Reports Clearance Officer on (240) 276–1243.

Comments are invited on: (a) Whether the proposed collections of information are necessary for the proper performance of the functions of the agency, including whether the information shall have practical utility; (b) the accuracy of the agency's estimate of the burden of the proposed collection of information; (c) ways to enhance the quality, utility, and clarity of the information to be collected; and (d) ways to minimize the burden of the collection of information on respondents, including through the use of automated collection techniques or other forms of information technology.

Proposed Project: Pretesting of Substance Abuse Prevention and Treatment and Mental Health Services Communication Messages—(OMB No. 0930–0196)—Extension

As the Federal agency responsible for developing and disseminating authoritative knowledge about substance abuse prevention, addiction treatment, and mental health services and for mobilizing consumer support and increasing public understanding to overcome the stigma attached to addiction and mental illness, the Substance Abuse and Mental Health Services Administration (SAMHSA) is responsible for development and dissemination of a wide range of education and information materials for both the general public and the

professional communities. This submission is for generic approval and will provide for formative and qualitative evaluation activities to (1) assess audience knowledge, attitudes, behavior and other characteristics for the planning and development of messages, communication strategies and public information programs; and (2) test these messages, strategies and program components in developmental form to assess audience comprehension, reactions and perceptions. Information obtained from testing can then be used to improve materials and strategies while revisions are still affordable and possible. The annual burden associated with these activities is summarized below.

Activity	Number of respondents	Responses/ respondent	Hours per response	Total hours
Individual In-depth Interviews.				
General Public	400	1	.75	300
Service Providers	200	1	.75	150
Focus Group Interviews.				
General Public	3,000	1	1.5	4,500
Service Providers	1,500	1	1.5	2,250
Telephone Interviews.				
General Public	335	1	.08	27
Service Providers	165	1	.08	13
Self-Administered Questionnaires.				
General Public	2,680	1	.25	670
Service Providers	1,320	1	.25	330
Gatekeeper Reviews.				
General Public	1,200	1	.50	600
Service Providers	900	1	.50	450
Total	11,700			9,290

Send comments to Summer King, SAMHSA Reports Clearance Officer, Room 2–1057, One Choke Cherry Road, Rockville, MD 20857 *or* email her a copy at *summer.king@samhsa.hhs.gov.* Written comments should be received by June 10, 2013.

Summer King,

Statistician.

[FR Doc. 2013–08257 Filed 4–9–13; 8:45 am]

BILLING CODE 4162–20–P

DEPARTMENT OF HEALTH AND HUMAN SERVICES

Substance Abuse and Mental Health Services Administration

Agency Information Collection Activities: Proposed Collection; Comment Request

In compliance with Section 3506(c)(2)(A) of the Paperwork Reduction Act of 1995 concerning opportunity for public comment on proposed collections of information, the Substance Abuse and Mental Health Services Administration (SAMHSA) will publish periodic summaries of proposed projects. To request more information on the proposed projects or to obtain a copy of the information collection plans, call the SAMHSA Reports Clearance Officer on (240) 276–1243.

Comments are invited on: (a) Whether the proposed collections of information are necessary for the proper performance of the functions of the agency, including whether the information shall have practical utility; (b) the accuracy of the agency's estimate of the burden of the proposed collection of information; (c) ways to enhance the quality, utility, and clarity of the information to be collected; and (d) ways to minimize the burden of the collection of information on respondents, including through the use of automated collection techniques or other forms of information technology.

Proposed Project: Registration for Behavioral Health Web Site and Resources (OMB No. 0930–0313)—REVISION

The Substance Abuse and Mental Health Services Administration (SAMHSA) is requesting OMB approval for a revision to the Behavioral Health Web site and Resources data collection. SAMHSA is authorized under section 501(d)(16) of the Public Health Service Act (42 U.S.C. 290aa(d)(16)) to develop and distribute materials for the prevention, treatment, and recovery from substance abuse and mental health disorders. To improve customer service and lessen the burden on the public to locate and obtain these materials, SAMHSA has developed a Web site that includes more than 1,400 free publications from SAMHSA and its component Agencies: the Center for Substance Abuse Treatment, the Center for Substance Abuse Prevention, the Center for Mental Health Services, the Center for Behavioral Health Statistics and Quality, and other SAMHSA partners, such as the Office of National Drug Control Policy. These products are available to the public for ordering and download. When a member of the public chooses to order hard-copy publications, it is necessary for SAMHSA to collect certain customer information in order to fulfill the request. To further lessen the burden on the public and provide the level of customer service that the public has come to expect from product Web sites, SAMHSA has developed a voluntary registration process for its publication Web site that allows customers to create accounts. Through these accounts, SAMHSA customers are able to access their order histories and save their shipping addresses. This reduces the burden on customers of having to re-identify materials they ordered in the past and to re-enter their shipping information each time they place an order with SAMHSA. During the Web site registration process, SAMHSA also asks customers to provide optional demographic information that helps SAMHSA evaluate the use and distribution of its publications and improve services to the public.

SAMHSA is employing a Web-based form for information collection to avoid duplication and unnecessary burden on customers who register both for an account on the product Web site and for email updates. The Web technology allows SAMHSA to integrate the email update subscription process into the Web site account registration process.

Customers who register for an account on the product Web site are given the option of being enrolled automatically to receive SAMHSA email updates. Any optional questions answered by the customer during the Web site registration process automatically are mapped to the profile generated for the email update system, thereby reducing the collection of duplicate information.

SAMHSA collects all customer information submitted for Web site registration and email update subscriptions electronically via a series of Web forms on the samhsa.gov domain. Customers can submit the Web forms at their leisure, or call SAMHSA's toll-free Call Center and an information specialist will submit the forms on their behalf. The electronic collection of information reduces the burden on the respondent and streamlines the data-capturing process. SAMHSA places Web site registration information into a Knowledge Management database and places email subscription information into a database maintained by a third-party vendor that serves multiple Federal agencies and the White House. Customers can change, add, or delete their information from either system at any time.

The respondents are behavioral health professionals, researchers, parents, caregivers, and the general public.

SAMHSA proposes two changes to the information collection. The first change is increasing the number of responses based on the average annual number of actual responses in 2011 and 2012. The second change is modifying the response options for ''Organization Type'' in the following ways: ''Treatment Facility'' will be changed to ''Behavioral Health Treatment Facility'', ''Individual/Group Practice'' will be changed to ''Other Health Care Facility'', and adding four new categories including ''Military/Veterans Organization,'' ''Criminal Justice/Courts,'' ''Health Insurer,'' and ''Human Resources/Employee Assistance Program.''

SAMHSA estimates the burden of this information collection as follows:

TABLE 1—ESTIMATED ANNUAL REPORTING BURDEN

	Number of respondents	Annual frequency per response	Total annual responses	Hours per response	Total hours
Web Site Registration	38,605	1	38,605	.033 (2 min.)	1,286
Email Update Subscription	21,138	1	21,138	.017 (1 min.)	359
Total	59,743		59,743		1,645

Send comments to Summer King, SAMHSA Reports Clearance Officer, Room 2–1057, One Choke Cherry Road, Rockville, MD 20857 *OR* email her a copy at *summer.king@samhsa.hhs.gov*. Written comments should be received by June 10, 2013.

Summer King,

Statistician.

[FR Doc. 2013–08258 Filed 4–9–13; 8:45 am]

BILLING CODE 4162–20–P

DEPARTMENT OF HOMELAND SECURITY

Federal Emergency Management Agency

[Docket ID: FEMA–2013–0013; OMB No. 1660–0033]

Agency Information Collection Activities: Proposed Collection; Comment Request.

AGENCY: Federal Emergency Management Agency, DHS.

ACTION: Notice.

SUMMARY: The Federal Emergency Management Agency, as part of its continuing effort to reduce paperwork and respondent burden, invites the general public and other Federal agencies to take this opportunity to comment on a revision of a currently approved information collection. In accordance with the Paperwork Reduction Act of 1995, this notice seeks comments concerning the certification of flood proof residential basements in Special Flood Hazard Areas.

DATES: Comments must be submitted on or before June 10, 2013.

ADDRESSES: To avoid duplicate submissions to the docket, please use only one of the following means to submit comments:

(1) *Online.* Submit comments at *www.regulations.gov* under Docket ID FEMA–2013–0013. Follow the instructions for submitting comments.

(2) *Mail.* Submit written comments to Docket Manager, Office of Chief Counsel, DHS/FEMA, 500 C Street SW., Washington, DC 20472–3100.

(3) *Facsimile.* Submit comments to (703) 483–2999.

(4) *Email.* Submit comments to *FEMA-POLICY@dhs.gov.* Include Docket ID FEMA–2013–0013 in the subject line.

All submissions received must include the agency name and Docket ID. Regardless of the method used for submitting comments or material, all submissions will be posted, without change, to the Federal eRulemaking Portal at *http://www.regulations.gov,* and will include any personal information you provide. Therefore, submitting this information makes it public. You may wish to read the Privacy Act notice that is available via the link in the footer of *www.regulations.gov.*

FOR FURTHER INFORMATION CONTACT: Mary Ann Chang, Insurance Examiner, FEMA, Mitigation Directorate, (202) 212–4712 for additional information. You may contact the Records Management Division for copies of the proposed collection of information at facsimile number (202) 646–3347 or email address: *FEMA-Information-Collections-Management@dhs.gov.*

SUPPLEMENTARY INFORMATION: The National Flood Insurance Program (NFIP) is authorized by Public Law 90–448 (1968) and expanded by Public Law 93–234 (1973). The National Flood Insurance Act of 1968 requires that the Federal Emergency Management Agency (FEMA) provide flood insurance. Title 44 CFR 60.3, Floodplain management criteria for flood-prone areas, ensures that communities participating in the NFIP, in Special Flood Hazard Areas (SFHAs), have basement construction at the lowest floor elevation or above the 100 year flood elevation, or Base Flood Elevation. This requirement is to reduce the risks of flood hazards to new buildings in SFHAs and reduce insurance rates. Title 44 CFR 60.6(c) allows communities to apply for an exception to permit and certify the

construction of flood proof residential basements in SFHAs. This certification must ensure that the community has demonstrated that the areas of special flood hazard, in which residential basements will be permitted, are subject to shallow and low velocity flooding and adequate flood warning time to notify residents of impending floods.

Collection of Information

Title: Residential Basement Floodproofing Certification.

Type of Information Collection: Revision of a currently approved information collection.

OMB Number: 1660–0033.

FEMA Forms: FEMA Form 086–0–24, Residential Basement Floodproofing Certificate.

Abstract: The Residential Basement Floodproofing Certification is completed by an engineer or architect and certifies that the basement floodproofing meets the minimum floodproofing specifications of FEMA. This certification is for residential structures located in non-coastal Special Flood Hazard Areas in communities that have received an exception to the requirement that structures be built at or above the Base Flood Elevation (BFE). Residential structures with certification showing the building is flood proofed to at least 1 foot above the BFE are eligible for lower rates on flood insurance.

Affected Public: Business or other for-profit.

Number of Respondents: 100.

Number of Responses: 100.

Estimated Total Annual Burden Hours: 325 Hours.

ESTIMATED ANNUALIZED BURDEN HOURS AND COSTS

Type of respondent	Form name/form number	Number of respondents	Number of responses per respondent	Total number of responses	Average burden per response (in hours)	Total annual burden (in hours)	Average hourly wage ate	Total annual respondent cost
Business or other for-profit.	Residential Basement Floodproofing Certificate/FEMA Form 086–0–24.	100	1	100	3.25 hrs	325	$51.91	$16,871
Total	.....	100	.....	100	.....	325	.....	$16,871

• **Note:** The "Avg. Hourly Wage Rate" for each respondent includes a 1.4 multiplier to reflect a fully-loaded wage rate.

Estimated Cost: The estimated annual cost to respondents for the hour burden is $16,871.00. The annual costs to respondents operations and maintenance costs for technical services is $35,000.00. There is no annual start-up or capital costs. The cost to the Federal Government is $4,092.05.

Comments

Comments may be submitted as indicated in the **ADDRESSES** caption above. Comments are solicited to (a) Evaluate whether the proposed data collection is necessary for the proper performance of the agency, including whether the information shall have practical utility; (b) evaluate the accuracy of the agency's estimate of the burden of the proposed collection of information, including the validity of the methodology and assumptions used; (c) enhance the quality, utility, and clarity of the information to be collected; and (d) minimize the burden of the collection of information on those who are to respond, including through the use of appropriate automated, electronic, mechanical, or other technological collection techniques or other forms of information technology, e.g., permitting electronic submission of responses.

Dated: March 28, 2013.

Charlene D. Myrthil,

Director, Records Management Division, Mission Support Bureau, Federal Emergency Management Agency, Department of Homeland Security.

[FR Doc. 2013–08290 Filed 4–9–13; 8:45 am]

BILLING CODE 9110–11–P

DEPARTMENT OF HOMELAND SECURITY

Federal Emergency Management Agency

[Docket ID: FEMA–2013–0008; OMB No. 1660–0080]

Agency Information Collection Activities; Proposed Collection; Comment Request: Application for Surplus Federal Real Property Public Benefit Conveyance and BRAC Program for Emergency Management Use

AGENCY: Federal Emergency Management Agency, DHS.

ACTION: Notice.

SUMMARY: The Federal Emergency Management Agency, as part of its continuing effort to reduce paperwork and respondent burden, invites the general public and other Federal agencies to take this opportunity to comment on an extension, without change, of a currently approved information collection. In accordance with the Paperwork Reduction Act of 1995, this notice seeks comments concerning the application process for the conveyance of Federal real property for public benefit. The purpose of this application is to implement the processes and procedures for the successful, lawful, and expeditious conveyance of real property from the Federal Government to public entities such as State, local, city, town, or other like government bodies as it relates to emergency management response purposes, including Fire and Rescue services. Compliance will ensure that properties will be fully positioned to use at their highest and best potentials as required by General Services Administration and Department of Defense regulations, Federal law, Executive Orders, and the Code of Federal Regulations.

DATES: Comments must be submitted on or before June 10, 2013.

ADDRESSES: To avoid duplicate submissions to the docket, please use only one of the following means to submit comments:

(1) *Online.* Submit comments at *www.regulations.gov* under Docket ID FEMA–2013–XXXX. Follow the instructions for submitting comments.

(2) *Mail.* Submit written comments to Docket Manager, Office of Chief Counsel, DHS/FEMA, 500 C Street SW.,

Room 835, Washington, DC 20472–3100.

(3) *Facsimile.* Submit comments to (703) 483–2999.

All submissions received must include the agency name and Docket ID. Regardless of the method used for submitting comments or material, all submissions will be posted, without change, to the Federal eRulemaking Portal at *http://www.regulations.gov,* and will include any personal information you provide. Therefore, submitting this information makes it public. You may wish to read the Privacy Act notice that is available via the link in the footer of *www.regulations.gov.*

FOR FURTHER INFORMATION CONTACT: Adrian Austin, Building Management Specialist, FEMA, Support Services and Facilities Management Division, 202–212–2099. You may contact the Records Management Division for copies of the proposed collection of information at facsimile number (202) 646–3347 or email address: *FEMA-Information-Collections-Management@dhs.gov.*

SUPPLEMENTARY INFORMATION: Excess Federal real property is defined as property that is no longer mission critical to the needs of the Federal Government. The conveyance and disposal of excess real property is governed by the Federal Property and Administrative Services Act of 1949 (Property Act) as amended, 40 U.S.C. 541, *et seq.,* 40 U.S.C. 553, and applicable regulations (41 CFR 102–75.750 through 102.75.815).

Under the sponsorship of Federal Emergency Management Agency (FEMA) the Property Act gives the Administrator of the General Services Administration (GSA) authority to convey Federal real and related surplus property (without monetary consideration) to units of State and local government for emergency management response purposes, including fire rescue services. The scope and philosophy of GSA's real property policies are contained in 41 CFR part 102–71.

Collection of Information

Title: Application for Surplus Federal Real Property Public Benefit Conveyance and BRAC Program for Emergency Management Use.

Type of Information Collection: Extension, without change, of a currently approved information collection.

FEMA Forms: FEMA Form 119–0–1, Surplus Federal Real Property Application for Public Benefit Conveyance.

Abstract: Use of the Application for Surplus Federal Real Property Public Benefit Conveyance and Base Realignment and Closure (BRAC) Program for Emergency Management Use is necessary to implement the processes and procedures for the successful, lawful, and expeditious conveyance of real property from the Federal Government to public entities such as State, local, county, city, town, or other like government bodies, as it relates to emergency management response purposes, including fire and rescue services. Utilization of this application will ensure that properties will be fully positioned for use at their highest and best potentials as required by GSA and Department of Defense regulations, public law, Executive Orders, and the Code of Federal Regulations.

Affected Public: State, local, or Tribal Government.

Number of Respondents: 100.

Number of Responses: 100.

Estimated Total Annual Burden Hours: 250 hours.

ESTIMATED ANNUALIZED BURDEN HOURS AND COSTS

Type of respondent	Form name/form number	Number of respondents	Number of responses per respondent	Total number of responses	Average burden per response (in hours)	Total annual burden (in hours)	Average hourly wage rate	Total annual respondent cost
State, Local, or Tribal Government.	Surplus Federal Real Property Application for Public Benefit Conveyances/FEMA Form 119–0–1.	50	1	50	4 hrs	200	$65.30	$13,060
State Local or Tribal Government.	Annual Status Report/No Form.	50	1	50	1 hour	50	$65.30	$2,950
Total	.....	100	.....	100	.....	250	.....	$16,010

Note: The ''Avg. Hourly Wage Rate'' for each respondent includes a 1.4 multiplier to reflect a fully-loaded wage rate.

Estimated Cost: The estimated annual cost to respondents for the hour burden is $16,010.00. There are no annual costs to respondents operations and maintenance costs for technical services. There is no annual start-up or capital costs. The cost to the Federal Government is $2,107.92.

Comments

Comments may be submitted as indicated in the **ADDRESSES** caption above. Comments are solicited to (a) Evaluate whether the proposed data collection is necessary for the proper performance of the agency, including whether the information shall have practical utility; (b) evaluate the accuracy of the agency's estimate of the burden of the proposed collection of information, including the validity of the methodology and assumptions used; (c) enhance the quality, utility, and clarity of the information to be collected; and (d) minimize the burden of the collection of information on those who are to respond, including through the use of appropriate automated, electronic, mechanical, or other technological collection techniques or other forms of information technology, *e.g.,* permitting electronic submission of responses.

Dated: March 28, 2013.

Charlene D. Myrthil,

Director, Records Management Division, Mission Support Bureau, Federal Emergency Management Agency, Department of Homeland Security.

[FR Doc. 2013–08279 Filed 4–9–13; 8:45 am]

BILLING CODE 9111–19–P

DEPARTMENT OF HOMELAND SECURITY

U.S. Citizenship and Immigration Services

[OMB Control Number 1615–NEW]

Agency Information Collection Activities: E-Verify Program Data Collections. New Information Collection; Comment Request

ACTION: 30-Day Notice.

SUMMARY: The Department of Homeland Security (DHS), U.S. Citizenship and Immigration Services (USCIS) will be submitting the following information collection request to the Office of Management and Budget (OMB) for review and clearance in accordance with the Paperwork Reduction Act of 1995. The information collection notice was previously published in the **Federal Register** on December 26, 2012, at 77 FR 76062, allowing for a 60-day public comment period. USCIS received comments from three commenters for this information collection. A discussion of the comments and USCIS' responses are addressed in item 8 of the supporting statement that can be viewed at: *http://www.regulations.gov*.

DATES: The purpose of this notice is to allow an additional 30 days for public comments. Comments are encouraged and will be accepted until May 10, 2013. This process is conducted in accordance with 5 CFR 1320.10.

ADDRESSES: Written comments and/or suggestions regarding the item(s) contained in this notice, especially regarding the estimated public burden and associated response time, should be directed to DHS, and to the OMB USCIS Desk Officer. Comments may be submitted to: DHS, USCIS, Office of Policy and Strategy, Chief, Regulatory Coordination Division, 20 Massachusetts Avenue NW., Washington, DC 20529–2140. Comments may also be submitted to DHS via email at *uscisfrcomment@dhs.gov,* to the OMB USCIS Desk Officer via facsimile at 202–395–5806 or via email at *oira_submission@omb.eop.gov* and via the Federal eRulemaking Portal Web site at *http://www.Regulations.gov* under e-Docket ID number USCIS–2012–0017. When submitting comments by email, please make sure to add [Insert OMB Control Number 1615–NEW] in the subject box.

All submissions received must include the agency name, OMB Control Number and Docket ID. Regardless of the method used for submitting comments or material, all submissions will be posted, without change, to the Federal eRulemaking Portal at *http://www.regulations.gov,* and will include any personal information you provide. Therefore, submitting this information makes it public. You may wish to consider limiting the amount of personal information that you provide in any voluntary submission you make to DHS. For additional information please read the Privacy Act notice that is available via the link in the footer of *http://www.regulations.gov*.

Note: The address listed in this notice should only be used to submit comments concerning this information collection. Please do not submit requests for individual case status inquiries to this address. If you are seeking information about the status of your individual case, please check ''My Case Status'' online at: *https://egov.uscis.gov/cris/Dashboard.do,* or call the USCIS National Customer Service Center at 1–800–375–5283.

Written comments and suggestions from the public and affected agencies should address one or more of the following four points:

(1) Evaluate whether the proposed collection of information is necessary for the proper performance of the functions of the agency, including whether the information will have practical utility;

(2) Evaluate the accuracy of the agencies estimate of the burden of the proposed collection of information, including the validity of the methodology and assumptions used;

(3) Enhance the quality, utility, and clarity of the information to be collected; and

(4) Minimize the burden of the collection of information on those who are to respond, including through the use of appropriate automated, electronic, mechanical, or other technological collection techniques or other forms of information technology, e.g., permitting electronic submission of responses.

Overview of This Information Collection:

(1) *Type of Information Collection Request:* New information collection.

(2) *Title of the Form/Collection:* E-Verify Program Data Collections.

(3) *Agency form number, if any, and the applicable component of the DHS sponsoring the collection:* No Agency Form Number; File OMB–69. U.S. Citizenship and Immigration Services.

(4) *Affected public who will be asked or required to respond, as well as a brief abstract: Primary:* Business or private sector. The E-Verify Data Collections evaluation is necessary in order for USCIS to obtain data from employers and workers in anticipation of the enactment of mandatory state and/or national employment eligibility verification programs for all or a substantial number of employers nationwide.

(5) *An estimate of the total number of respondents and the amount of time estimated for an average respondent to respond:*

- Business/Private Sector: 135 respondents averaging 2 hours per response; plus
- Individual/Households: 400 respondents averaging 1 hour per response.

(6) *An estimate of the total public burden (in hours) associated with the collection:* 670 annual burden hours.

If you need a copy of the information collection instrument with supplementary documents, or need additional information, please visit *http://www.regulations.gov*. We may also be contacted at: USCIS, Office of Policy and Strategy, Regulatory Coordination Division, 20 Massachusetts Avenue NW., Washington, DC 20529–2140; Telephone 202–272–8377.

Dated: April 5, 2013.

Laura Dawkins,

Chief, Regulatory Coordination Division, Office of Policy and Strategy, U.S. Citizenship and Immigration Services, Department of Homeland Security.

[FR Doc. 2013–08383 Filed 4–9–13; 8:45 am]

BILLING CODE 9111–97–P

DEPARTMENT OF HOMELAND SECURITY

U.S. Customs and Border Protection

Notice of Issuance of Final Determination Concerning Printer and Fax Machine

AGENCY: U.S. Customs and Border Protection, Department of Homeland Security.

ACTION: Notice of final determination.

SUMMARY: This document provides notice that U.S. Customs and Border Protection (''CBP'') has issued a final determination concerning the country of origin of the HP

LaserJet Enterprise 500 Color Printer and Fax Machine M551. Based upon the facts presented, CBP has concluded in the final determination that China is the country of origin of the HP LaserJet Enterprise 500 Color Printer and Fax Machine M551, for purposes of U.S. Government procurement.

DATES: The final determination was issued on April 3, 2013. A copy of the

final determination is attached. Any party-at-interest, as defined in 19 CFR 177.22(d), may seek judicial review of this final determination within May 10, 2013.

FOR FURTHER INFORMATION CONTACT: Karen Greene, Valuation and special Programs Branch, Regulations and Rulings, Office of International Trade (202–3235–0041).

SUPPLEMENTARY INFORMATION: Notice is hereby given that on April 3, 2013, pursuant to subpart B of part 177, Customs and Border Protection (CBP) Regulations (19 CFR part 177, subpart B), CBP issued a final determination concerning the country of origin of the HP LaserJet Enterprise 500 Color Printer and Fax Machine M551 which may be offered to the United States government under an undesignated government procurement contract. This final determination, in HQ H219519, was issued at the request of Hewlett-Packard Company under procedures set forth at 19 CFR part 177, Subpart B, which implements Title III of the Trade Agreements Act of 1979, as amended (19 U.S.C. 2511–18). In the final determination CBP concluded that the HP LaserJet Enterprise 500 Color Printer and Fax Machines M551 assembled in Mexico from foreign made parts are products of China for purposes of U.S. Government procurement.

Section 177.29, CBP Regulations (19 CFR 177.29), provides that notice of final determinations shall be published in the **Federal Register** within 60 days of the date the final determination is issued. Section 177.30, CBP Regulations (19 CFR 177.30), provides that any party-at-interest, as defined in 19 CFR 177.22(d), may seek judicial review of a final determination within 30 days of publication of such determination in the **Federal Register.**

Dated: April 3, 2013.

Sandra L. Bell,

Executive Director, Regulations and Rulings, Office of International Trade.

Attachment

HQ H219519

April 3, 2013

MAR–2 OT:RR:CTF:VS H219519 KSG

Carlos Halasz
Product Compliance Strategy & Policy
Hewlett-Packard Company
8501 SW 152 Street
Palmetto Bay, FL 33157

RE: Government Procurement; Country of Origin of HP LaserJet Enterprise 500 Color M551 Printer and Fax Machine; substantial transformation

Dear Mr. Halasz:

This is in response to your letter dated May 21, 2012, requesting a final determination on behalf of Hewlett-Packard Company (''HP''), pursuant to subpart B of part 177 of the U.S. Customs and Border Protection (''CBP'') Regulations (19 CFR Part 177). Under these regulations, which implement Title III of the Trade Agreements Act of 1979 (''TAA'') as amended (19 U.S.C. 2511 et seq.), CBP issues country of origin advisory rulings and final determinations as to whether an article is or would be a product of a designated country or instrumentality for the purposes of granting waivers of certain ''Buy American'' restrictions in U.S. law or practice for products offered for sale to the U.S. Government.

The final determination concerns the country of origin of the HP LaserJet Enterprise 500 Color Printer and Fax Machine M551 (''LaserJet 500''). We note that as a U.S. importer, HP is a party-at-interest within the meaning of 19 CFR 177.22(d)(1) and is entitled to request this final determination. A telephone conference was held on this matter on September 27, 2012.

FACTS:

The LaserJet 500 is a laser-based office machine for printing and faxing, suitable for use in homes and small to medium-size businesses. It is composed of the following components: (1) an incomplete print engine, which consists of a metal frame, plastic skins, motors, controller board (supplier provided firmware), a laser scanning system, fuser, paper trays, cabling, paper transport rollers, miscellaneous sensing and imaging systems; (2) the formatter board, which consists of a printed circuit board, industry standard components and customized integrated circuits; (3) the fax card; (4) the hard disc drive; (5) the solid state drive; (6) the firmware; (7) the intermediate transfer belt (''ITB''); and (8) minor components and accessories. The incomplete print engine may also come in two other configurations that include either the ITB or the base unit and all of the hardware components.

It is stated that the complete print engine is the central mechanism of the LaserJet 500 that performs printing. It translates a laser image generated by the formatter to markings on paper, transports paper, and fuses the image on the paper. The ITB is essential to the imaging function because it transfers the image from each toner cartridge to the ITB by color plane and then carries the image to the paper. The print formatter is the main controller of the printer. Its main function is to receive input data from remote devices via different input ports, translate that data into format the print engine understands, and send the data onto the print engine, enabling the information to be printed onto paper. It is also responsible for providing command and control signals allowing the engine to start, run and stop motors in a manner that allows the paper to move from input devices to the designated output bin of the printer, while at the same time putting the printed image on the paper.

All the parts are produced in China except for the hard disc drive, which is produced in Malaysia. The firmware that allows access to the hardware (such as trays, and paper size) and software (ex. job counting, security, stored jobs) is developed and written in the U.S. and is tested and debugged in either Brazil or India. The formatter and other sub-systems have their own firmware for operation.

You presented three different scenarios. In scenarios one and two, the LaserJet 500 undergoes the following operations in Mexico: final assembly, downloading firmware written in U.S., and testing, which includes making settings appropriate to the country of the buyer and the client's specific needs. In scenario one, the assembly takes 3–4 minutes whereby the external memory drive is installed onto the formatter and the cables are routed as necessary. The firmware for the engine and formatter is downloaded onto the hard drive or solid state drive. In scenario two, the assembly takes 7–8 minutes and involves the assembly discussed in scenario one, plus the installation of the ITB. In both scenarios, the testing takes 7–14 minutes and includes making certain settings for the language, paper, functionality, and other feature settings, as described above. In scenario three, the LaserJet 500 undergoes assembly in Mexico that takes 2–3 minutes, the firmware for the sub-systems (engine, formatter) is downloaded onto the hard drive or solid state drive, and the product undergoes testing.

The cost of the incomplete print engine is the most expensive of the hardware components, with the formatter board being the second-most expensive component.

ISSUE:

What is the country of origin of the imported LaserJet 500 for government procurement purposes under the three different scenarios?

LAW AND ANALYSIS:

Pursuant to Subpart B of part 177, 19 CFR 177.21et seq., which implements Title III of the Trade Agreements Act of 1979, as amended (19 U.S.C. 2511 et seq.), CBP issues country of origin advisory rulings and final determinations as to whether an article is or would be a product of a designated country or instrumentality for the purposes of granting waivers of certain ''Buy American'' restrictions in U.S. law or practice for products offered for sale to the U.S. Government.

Under the rule of origin set forth under 19 U.S.C. 2518(4)(B):

An article is a product of a country or instrumentality only if (i) it is wholly the growth, product, or manufacture of that country or instrumentality, or (ii) in the case of an article which consists in whole or in part of materials from another country or instrumentality, it has been substantially transformed into a new and different article of commerce with a name, character, or use distinct from that of the article or articles from which it was so transformed.

See also 19 CFR 177.22(a).

It is your position that the country of origin in scenarios one and two is Mexico because the final assembly, programming and testing results in a finished and operational laser printer. You believe that the country of origin in scenario three is Mexico because although the incomplete print engine already includes all hardware components when it is imported

into Mexico, the production processing in Mexico consists of loading the firmware onto the print engine.

In determining whether the combining of parts or materials constitutes a substantial transformation, the determinative issue is the extent of operations performed and whether the parts lose their identity and become an integral part of the new article. *Belcrest Linens v. United States,* 573 F. Supp. 1149 (CIT 1983), aff'd 741 F. 2d 1368 (Fed. Cir. 1984). Assembly operations that are minimal or simple, as opposed to complex or meaningful, will generally not result in a substantial transformation. In Customs Service Decision (''C.S.D.'') 85–25, 19 Cust. Bull. 844 (1985), CBP held that for purposes of the Generalizes System of Preferences, the assembly of a large number of fabricated components onto a printed circuit board in a process involving a considerable amount of time and skill resulted in a substantial transformation. In that case, in excess of 50 discrete fabricated components were assembled.

In order to determine whether a substantial transformation occurs when components of various origins are assembled into completed products, CBP considers the totality of the circumstances and makes such determinations on a case-by-case basis. The country of origin of the item's components, extent of the processing that occurs within a country, and whether such processing renders a product with a new name, character, and use are primary considerations in such cases. Additionally, factor such as the resources expended on product design and development, the extent and nature of post-assembly inspection and testing procedures, and worker skill required during the actual manufacturing process will be considered when determining whether a substantial transformation has occurred. No one factor is determinative.

In *Data General v. United States,* 4 CIT 182 (1982), the court determined that for purposes of determining eligibility under item 807.00, Tariff Schedule of the United States (predecessor to subheading 9802.00.80, Harmonized Tariff Schedule of the United States), the programming of a foreign Programmable Read Only Memory Chip (''PROM'') in the United States substantially transformed the PROM into a U.S. article. In programming the imported PROM's, the U.S. engineers systematically caused various distinct electronic interconnections to be formed within each integrated circuit. The programming bestowed upon each circuit its electronic function that is, its ''memory'' which could be retrieved. A distinct physical change was effected in the PROM by the opening or closing of the fuses, depending on the method of programming. This physical alteration, not visible to the naked eye, could be discerned by electronic testing of the PROM. The court noted that the programs were designed by a U.S. project engineer with many years of experience in ''designing and building hardware.'' While replicating the program pattern from a ''master'' PROM may be a quick one-step process, the development of the pattern and production of the ''master'' PROM required much time and expertise. The court noted that it was undisputed that programing altered the character of a PROM. The essence of the article, its interconnections or stored memory, was established by programming. The court concluded that altering the non-function circuitry comprising a PROM through technological expertise in order to produce a functioning read only memory device, possessing a desired distinctive circuit pattern, was no less a substantial transformation than the manual interconnection of transistors, resistors and diodes upon a circuit board created a similar pattern.

You cite HRL H185775, dated December 21, 2011, where CBP ruled that a laser-jet machine that operates as a printer, scanner, copy and fax machine, was considered a product of Mexico for procurement purposes. The scanner in that case was designed, developed and assembled in the U.S. The control panel was also designed in the U.S. The print engine was produced in Vietnam. The formatter, control panel, and solid state drive were produced in China. The hard disk drive was produced in Malaysia. This case is distinguishable from the instant case because the hardware was produced in various Asian countries.

You also cite HRL H175415, dated October 4, 2011, where CBP held that development of U.S. software, at significant cost to the company and over many years plus the programming of an imported local area network switch in the U.S. together substantially transformed the switch in the U.S. In that case, the software provided the hardware with its essential character of data transmission by providing network switching and routing functionality among other operations. Accordingly, the country of origin of the switch was considered the U.S.

Unlike H185775, in all three scenarios presented in this case, all the components except the hard disc drive are produced in China. The assembly performed in Mexico is a simple assembly not significant enough to result in a substantial transformation of those Chinese components and subassemblies. There is no showing that in any of the scenarios, the processing in Mexico is complex. The downloading of the firmware in Mexico does not change or define the use of the finished printer/fax machine. The firmware itself provides the essential characteristics of performing as a printer and fax machine. While the firmware may be developed in the U.S., the downloading is not occurring in the U.S. Further, the firmware downloaded in Mexico does not include all the firmware necessary for the finished good. Furthermore, some of the assemblies (formatter, for example) have their own firmware. All the significant parts that are the essence of the finished product are produced in China, particularly the high-cost print engine and formatter board. Accordingly, we find that the country of origin of the imported LaserJet 500 for government procurement purposes would be China under all three scenarios.

HOLDING:

Based on the facts provided, the LaserJet 500 will be considered a product of China under all three scenarios for government procurement purposes.

Sincerely,

Sandra L. Bell,

Executive Director, Regulations and Rulings Office of International Trade.

[FR Doc. 2013–08347 Filed 4–9–13; 8:45 am]

BILLING CODE P

DEPARTMENT OF HOMELAND SECURITY

U.S. Customs and Border Protection

Notice of Issuance of Final Determination Concerning Certain Ultrasound Systems

AGENCY: U.S. Customs and Border Protection, Department of Homeland Security.

ACTION: Notice of final determination.

SUMMARY: This document provides notice that U.S. Customs and Border Protection (''CBP'') has issued a final determination concerning the country of origin of certain ultrasound systems. Based upon the facts presented, CBP has concluded in the final determination that the U.S. is the country of origin of the ultrasound systems for purposes of U.S. government procurement.

DATES: The final determination was issued on April 3, 2013. A copy of the final determination is attached. Any party-at-interest, as defined in 19 CFR 177.22(d), may seek judicial review of this final determination on or before May 10, 2013.

FOR FURTHER INFORMATION CONTACT: Elif Eroglu, Valuation and Special Programs Branch: (202) 325–0277.

SUPPLEMENTARY INFORMATION: Notice is hereby given that on April 3, 2013, pursuant to subpart B of part 177, Customs Regulations (19 CFR part 177, subpart B), CBP issued a final determination concerning the country of origin of the Siemens Medical S2000 and Antares ultrasound systems which may be offered to the U.S. Government under an undesignated government procurement contract. This final determination, Headquarters Ruling Letter (''HQ'') H219597, was issued at the request of Siemens Medical Solutions USA under procedures set forth at 19 CFR part 177, subpart B, which implements Title III of the Trade Agreements Act of 1979, as amended (19 U.S.C. 2511–18). In the final determination, CBP has concluded that, based upon the facts presented, the assembly of the S2000 and Antares ultrasound systems in the U.S., from parts made in Japan, Korea, Italy, China, and the U.S., constitutes a substantial

transformation, such that the U.S. is the country of origin of the finished articles for purposes of U.S. government procurement.

Section 177.29, Customs Regulations (19 CFR 177.29), provides that notice of final determinations shall be published in the **Federal Register** within 60 days of the date the final determination is issued. Section 177.30, CBP Regulations (19 CFR 177.30), provides that any party-at-interest, as defined in 19 CFR 177.22(d), may seek judicial review of a final determination within 30 days of publication of such determination in the **Federal Register**.

Dated: April 3, 2013.

Sandra L. Bell,

Executive Director, Regulations and Rulings, Office of International Trade.

Attachment

HQ H219597

April 3, 2013

OT:RR:CTF:VS H219597 EE

CATEGORY: Marking

Alan W. H. Gourley
Crowell & Moring LLP
1001 Pennsylvania Ave., NW
Washington, DC 20004

RE: U.S. Government Procurement; Title III, Trade Agreements Act of 1979 (19 U.S.C. § 2511); Subpart B, Part 177, CBP Regulations; Ultrasound Systems

Dear Mr. Gourley:

This is in response to your correspondence of January 30, 2012 and additional information you submitted on May 22, 2012, July 23, 2012, August 29, 2012, and September 4, 2012, requesting a final determination on behalf of Siemens Medical Solutions USA, Inc. (''Siemens Medical''), pursuant to subpart B of part 177, U.S. Customs and Border Protection (''CBP'') Regulations (19 C.F.R. § 177.21 *et seq.*). A meeting between counsel and this office occurred on November 13, 2012 to allow counsel the opportunity to discuss the case and present further arguments. Counsel submitted an additional supplemental submission on November 16, 2012. Under the pertinent regulations, which implement Title III of the Trade Agreements Act of 1979, as amended (19 U.S.C. § 2511 *et seq.*), CBP issues country of origin advisory rulings and final determinations as to whether an article is or would be a product of a designated country or instrumentality for the purpose of granting waivers of certain ''Buy American'' restrictions in U.S. law or practice for products offered for sale to the U.S. Government.

This final determination concerns the country of origin of the Siemens Medical S2000 and Antares ultrasound systems. We note that Siemens Medical is a party-at-interest within the meaning of 19 C.F.R. § 177.22(d)(1) and is entitled to request this final determination.

FACTS:

The merchandise at issue are two Siemens Medical ultrasound units, known as the S2000 and Antares ultrasound systems, engineered, designed, and subject to final assembly in the U.S. from U.S. and foreign components. The S2000 and Antares ultrasound systems are diagnostic imaging systems that transmit sound waves and then receive and process the echoes of those waves to create a visual representation of a patient's tissues and organs. You state these systems comprise three core elements: (1) the transducers that send and receive the acoustic signals from the patient; (2) the electronics module that processes signals and ''beamform'' the data to convert it into a form that can be used by Siemens' proprietary application software; and (3) the application software that manipulates and displays the patient image data to allow for diagnostic and prescriptive use by healthcare professionals.

One of the most critical elements required for the manufacture of a functional ultrasound system is the transducer which is the handset that is passed over the surface of the patient's body, where it produces high-frequency sound waves that penetrate the area of the body being scanned. The transducer focuses the sound-wave beam of pulses into specific dimensions as well as scans the beam over the region of interest in the patient's anatomy. The transducer then receives the ''echo'' of these sound waves as they rebound from the patient's internal organs and tissue, and transmits this returned data (as electrical impulses) to the electronics module. The quality of the beam and return echo define the quality of the signal and resulting image which is of key significance to the diagnostician employing the ultrasound. The typical customer-ordered S2000 or Antares ultrasound systems will have three or more transducers that allow for application-specific usage. The transducers are manufactured in Korea.

The electrical signals from the transducer are processed by the electronics module and, once converted to usable digital data, manipulated by the application software and then displayed on the machine's monitor for the clinical user. The proprietary software is run on what are essentially commoditized computer hardware components.

The application software is stated to be the key element that enables the electronics module to ''translate'' the data received from the transducer into an image to be displayed on the monitor. The software performs a variety of functions including standard work flow items such as archiving and displaying patient data as well as image data manipulation/transformation, custom display, and analytics/calculations. Depending on the specific customer's intended end-use (*e.g.,* cardio or prenatal) and requirements, different aspects of the software may be activated/enabled through the use of licensing keys.

Manufacturing Process

Electronics Module Assembly:

You state that the manufacturing of the electronics module in China involves: (1) the incorporation and testing of the Chinese-origin circuit boards (printed wiring assemblies) to specification; and (2) the incorporation of Chinese-origin real-time manager assembly, which includes a commercial computer motherboard, CPU, hard drive, and video card. These assembly operations also require the installation of Chinese-origin subcomponents and sub-assemblies including:

- A ''backplane'' which is a circuit board that connects the various system boards;
- A ''cardcage'' which is a mechanical structure to which the backplane is bolted;
- A ''continuous beamformer'' used for Doppler imaging to depict both visual images and audio interpretation of blood flow;
- A power supply system (including a U.S.-origin transformer, Japanese-origin power supplies for both the analog and digital portions of the system, and the alternating current tray and cable that will connect to the external power receptacle); and
- A trolley frame assembly, which is the structure that houses the CPU and that ultimately will house the other components added after importation into the U.S. (i.e., the monitor, the control panel, connecting cables, transducers, etc.).

Following assembly of the electronics module, the test version of the Siemens Medical's operating system software, which is designed, engineered, and written in the U.S., is uploaded onto the real-time manager assembly hard drive to test the hardware to correct any manufacturing defects. The testing involves the use of a temporary licensing schema (via the use of a USB license key tool) to temporarily enable various application features. Once the testing is completed and the USB thumb drive is removed, the software is no longer enabled. You state that the condition of the system when it leaves Shanghai is a tested, but incomplete electronics module. You state that even with the application of power, the addition of a control panel, monitor, and transducers, the electronics module, in its form as exported from China, could not be used as a diagnostics ultrasound machine.

Ultrasound System Integration and Testing:

After importation, the partially completed electronics module initially arrives to the facility of a Siemens Medical contract manufacturer in San Jose, CA for completion of the electronics module. This includes the installation of the Italian-origin monitor, the U.S.-origin control panel, and the U.S.-origin outer covers that cover the electronics, the alternating current tray, and the transformer.

In addition, depending on the specific customer order at issue, the assembly may also include installation of the ''Physio Module'' (a component that provides the system with an interface to patient respiration and electrocardiogram (ECG) data, whereby that data can be overlaid on the ultrasound image such that a video clip of the imaging data will include ECG and respiration data in real time) and a digital video recorder assembly.

Once the assembly is completed, the following series of tests and system adjustments are performed:

- Electrical safety testing of the components.
- Calibration of the Italian-origin display monitor using a specific ultrasound imaging procedure.

• Diagnostic and imaging tests using Korean-origin ''slave'' transducers to ensure proper functioning of the control panel and monitor.

• 24 hours of reliability testing for any latent failures. This involves a series of power-on and power-off operations, customer use simulations, stress testing of the real-time manager assembly, automated software tests, and tests of numerous standby operations.

At the conclusion of the reliability testing, the system is checked for cosmetic acceptance, which involves a physical review of the product against certain customer criteria. The system is then packaged and shipped to Siemens Medical's Buffalo Grove, Illinois location for final assembly, configuration and testing.

Final Assembly, Configuration, and Testing:

Upon arrival at Siemen's Medical's Buffalo Grove facility, the system is ''whitewashed'', where the test version of the software is wiped from the system in its entirety. Next, the most current version of the operating system software, which is designed, developed, and written in the U.S., is uploaded to each unit using DVDs. The application software is enabled by loading the permanent licensing keys into the system using a web-based tool that interfaces with Siemen's enterprise resource planning system (SAP). You state that every feature and system type has a unique license key. The web-based tool identifies the features and system type as shown in the customer's order in the SAP and creates the corresponding license key file on a DVD or USB drive. That file, in turn, is uploaded to the unit and enables only the purchased features in the systems software. Next, the equipment is adjusted and configured to meet customer requirements for line voltage (including addition of the appropriate power cord), language (control panel overlay and system software settings), and documentation devices (printer etc.). An electrical safety test is then performed on the system's final configuration. The final test process is the execution of the Customer Relevant Simulation Testing, which is a high-level imaging process that uses the customer ordered Korean-origin transducers and capitalized transducers to fully test the functionality of the complete ultrasound system (including customized applications, transducers, system, and peripherals). You state that this test requires a highly trained skilled diagnostician as it is intended to replicate the customer's intended user environment.

The S2000 ultrasound system is comprised of approximately 19 subassemblies and additional components. It takes approximately 23–24 hours to produce the finished S2000 ultrasound system of which 13–14 hours takes place in the U.S. The Antares ultrasound system is comprised of 17 subassemblies and additional components. It takes approximately 24–25 hours to produce the finished Antares ultrasound system of which 14–15 hours takes place in the U.S.

You submitted the costed bill of materials for the S2000 and Antares ultrasound systems. You also submitted a copy of the product brochures for the S2000 and Antares systems. Additionally, you provided pictures of various transducers, the electronics components, the partially completed electronics module, the list of printed wire assemblies and functions, and the manufacturing process flow chart.

ISSUE:

What is the country of origin of the S2000 and Antares ultrasound systems for the purpose of U.S. government procurement?

LAW AND ANALYSIS:

Pursuant to subpart B of part 177, 19 C.F.R. § 177.21 *et seq.,* which implements Title III of the Trade Agreements Act of 1979, as amended (19 U.S.C. § 2511 *et seq.*), CBP issues country of origin advisory rulings and final determinations as to whether an article is or would be a product of a designated country or instrumentality for the purposes of granting waivers of certain ''Buy American'' restrictions in U.S. law or practice for products offered for sale to the U.S. Government.

Under the rule of origin set forth under 19 U.S.C. § 2518(4)(B):

An article is a product of a country or instrumentality only if (i) it is wholly the growth, product, or manufacture of that country or instrumentality, or (ii) in the case of an article which consists in whole or in part of materials from another country or instrumentality, it has been substantially transformed into a new and different article of commerce with a name, character, or use distinct from that of the article or articles from which it was so transformed.

See also, 19 C.F.R. § 177.22(a).

In rendering advisory rulings and final determinations for purposes of U.S. government procurement, CBP applies the provisions of subpart B of part 177 consistent with the Federal Acquisition Regulations. *See* 19 C.F.R. § 177.21. In this regard, CBP recognizes that the Federal Acquisition Regulations restrict the U.S. Government's purchase of products to U.S.-made or designated country end products for acquisitions subject to the TAA. *See* 48 C.F.R. § 25.403(c)(1). The Federal Acquisition Regulations define ''U.S.-made end product'' as:

* * * an article that is mined, produced, or manufactured in the United States or that is substantially transformed in the United States into a new and different article of commerce with a name, character, or use distinct from that of the article or articles from which it was transformed.

48 C.F.R. § 25.003.

In order to determine whether a substantial transformation occurs when components of various origins are assembled into completed products, CBP considers the totality of the circumstances and makes such determinations on a case-by-case basis. The country of origin of the item's components, extent of the processing that occurs within a country, and whether such processing renders a product with a new name, character, and use are primary considerations in such cases. Additionally, factors such as the resources expended on product design and development, the extent and nature of post-assembly inspection and testing procedures, and worker skill required during the actual manufacturing process will be considered when determining whether a substantial transformation has occurred. No one factor is determinative.

In *Texas Instruments v. United States,* 681 F.2d 778, 782 (CCPA 1982), the court observed that the substantial transformation issue is a ''mixed question of technology and customs law.''

In *Data General v. United States,* 4 Ct. Int'l Trade 182 (1982), the court determined that for purposes of determining eligibility under item 807.00, Tariff Schedules of the United States (predecessor to subheading 9802.00.80, Harmonized Tariff Schedule of the United States), the programming of a foreign PROM (Programmable Read-Only Memory chip) in the United States substantially transformed the PROM into a U.S. article. In programming the imported PROMs, the U.S. engineers systematically caused various distinct electronic interconnections to be formed within each integrated circuit. The programming bestowed upon each circuit its electronic function, that is, its ''memory'' which could be retrieved. A distinct physical change was effected in the PROM by the opening or closing of the fuses, depending on the method of programming. This physical alteration, not visible to the naked eye, could be discerned by electronic testing of the PROM. The court noted that the programs were designed by a U.S. project engineer with many years of experience in ''designing and building hardware.'' While replicating the program pattern from a ''master'' PROM may be a quick one-step process, the development of the pattern and the production of the ''master'' PROM required much time and expertise. The court noted that it was undisputed that programming altered the character of a PROM. The essence of the article, its interconnections or stored memory, was established by programming. The court concluded that altering the non-functioning circuitry comprising a PROM through technological expertise in order to produce a functioning read only memory device, possessing a desired distinctive circuit pattern, was no less a ''substantial transformation'' than the manual interconnection of transistors, resistors and diodes upon a circuit board creating a similar pattern.

HQ H203555, dated April 23, 2012, concerned the country of origin of certain oscilloscopes. CBP considered five manufacturing scenarios. In the various scenarios, the motherboard and the power controller of either Malaysian or Singaporean origin were assembled in Singapore with subassemblies of Singaporean origin into oscilloscopes. CBP found that under the various scenarios, there were three countries under consideration where programming and/or assembly operations took place, the last of which was Singapore. CBP noted that no one country's operations dominated the manufacturing operations of the oscilloscopes. As a result, while the boards assembled in Malaysia were important to the function of the oscilloscopes and the U.S. firmware and software were used to program

the oscilloscopes in Singapore, the final programming and assembly of the oscilloscopes was in Singapore and hence represented the last substantial transformation. Therefore, CBP found that the country of origin of the oscilloscopes was Singapore.

HQ H170315, dated July 28, 2011, concerned the country of origin of satellite telephones. CBP was asked to consider six scenarios involving the manufacture of PCBs in one country and the programming of the PCBs with second country software either in the first country or in a third country where the phones were assembled. In the third scenario, the application and transceiver boards for satellite phones were assembled in Malaysia and programmed with U.K.-origin software in Singapore, where the phones were also assembled. CBP found that no one country's operations dominated the manufacturing operations of the phones and that the last substantial transformation occurred in Singapore. *See also* HQ H014068, dated October 9, 2007 (CBP determined that a cellular phone designed in Sweden, assembled in either China or Malaysia and shipped to Sweden, where it was loaded with software that enabled it to test equipment on wireless networks, was a product of Sweden. Once the software was installed on the phones in Sweden, they became devices with a new name, character and use, that is, network testing equipment. As a result of the programming operations performed in Sweden, CBP found that the country of origin of the network testing equipment was Sweden).

In this case, substantial manufacturing operations are performed in China, the U.S., Korea, and Italy. The electronics module, which is partially assembled in China, is imported into the U.S., where it is assembled with other core components, including the Korean-origin transducers that send and receive the acoustic signals, the Italian-origin monitor that permits display of images, and the U.S.-origin control panel that serves as the user interface. The completely assembled ultrasound systems are then uploaded with U.S. designed, developed, and written operating system software and application software. You state that the software is necessary for the ultrasound systems to perform their intended function of providing diagnostic information (an observable image with related data). As previously noted, it takes approximately 23–24 hours to produce the finished S2000 ultrasound system of which 13–14 hours takes place in the U.S. It takes approximately 24–25 hours to produce the finished Antares ultrasound system of which 14–15 hours takes place in the U.S. You claim that the assembly, integration, and testing in the U.S. is conducted by specialized technicians. You also state that all of the research & development, product engineering and design investment occur in the U.S. Based on the totality of the circumstances, we find that the last substantial transformation occurs in the U.S., the location where the final assembly and installation of the operating system software and application software occurs. Prior to the assembly and programming in the U.S., the products are unable to carry out the functions of ultrasound systems. However, the assembly and programming in the U.S. creates a new product that is capable of providing diagnostic information. Consequently, we find that the country of origin of the ultrasound systems is the U.S.

HOLDING:

The imported components that are used to manufacture the S2000 and Antares ultrasound systems are substantially transformed as a result of the assembly and software installation operations performed in the U.S. Therefore, we find that the country of origin of the S2000 and Antares ultrasound systems for government procurement purposes is the U.S.

Notice of this final determination will be given in the *Federal Register*, as required by 19 C.F.R. § 177.29. Any party-at-interest other than the party which requested this final determination may request, pursuant to 19 C.F.R. § 177.31, that CBP reexamine the matter anew and issue a new final determination. Pursuant to 19 C.F.R. § 177.30, any party-at-interest may, within 30 days after publication of the *Federal Register* notice referenced above, seek judicial review of this final determination before the Court of International Trade.

Sincerely,

Sandra L. Bell,

Executive Director, Regulations and Rulings, Office of International Trade.

[FR Doc. 2013–08349 Filed 4–9–13; 8:45 am]

BILLING CODE 9111–14–P

DEPARTMENT OF HOUSING AND URBAN DEVELOPMENT

[Docket No. FR–5683–N–28]

Notice of Submission of Proposed Information Collection to OMB Requisition for Disbursement of Sections 202 & 811 Capital Advance/Loan Funds

AGENCY: Office of the Chief Information Officer, HUD.

ACTION: Notice.

SUMMARY: The proposed information collection requirement described below has been submitted to the Office of Management and Budget (OMB) for review, as required by the Paperwork Reduction Act. HUD is soliciting public comments on the subject proposal.

This information collection is used by Owner entities and submitted to HUD on a periodic basis (generally monthly) during the course of construction for the purpose of obtaining Section 202/811 capital advance/loan funds. The information will also be used to identify the Owner, the project, the type of disbursement being requested, the items to be covered by the disbursement, and the name of the depository holding the Owner's bank account, including the account number.

DATES: *Comments Due Date:* May 10, 2013.

ADDRESSES: Interested persons are invited to submit comments regarding this proposal. Comments should refer to the proposal by name and/or OMB approval Number (2502–0187) and should be sent to: HUD Desk Officer, Office of Management and Budget, New Executive Office Building, Washington, DC 20503; fax: 202–395–5806. Email: *OIRA_Submission@omb.eop.gov* fax: 202–395–5806.

FOR FURTHER INFORMATION CONTACT: Colette Pollard, Reports Management Officer, QDAM, Department of Housing and Urban Development, 451 Seventh Street SW., Washington, DC 20410; email Colette Pollard at *Colette.Pollard@hud.gov.* or telephone (202) 402–3400. This is not a toll-free number. Copies of available documents submitted to OMB may be obtained from Ms. Pollard.

SUPPLEMENTARY INFORMATION: This notice informs the public that the Department of Housing and Urban Development has submitted to OMB a request for approval of the Information collection described below. This notice is soliciting comments from members of the public and affecting agencies concerning the proposed collection of information to: (1) Evaluate whether the proposed collection of information is necessary for the proper performance of the functions of the agency, including whether the information will have practical utility; (2) Evaluate the accuracy of the agency's estimate of the burden of the proposed collection of information; (3) Enhance the quality, utility, and clarity of the information to be collected; and (4) Minimize the burden of the collection of information on those who are to respond; including through the use of appropriate automated collection techniques or other forms of information technology, e.g., permitting electronic submission of responses.

This notice also lists the following information:

Title of Proposed: Requisition for Disbursement of Sections 202 & 811 Capital Advance/Loan Funds.

OMB Approval Number: 2502–0187.

Form Numbers: HUD–92403–CA and HUD–92403–EH.

Description of the need for the information and proposed use: This information collection is used by Owner entities and submitted to HUD on a periodic basis (generally monthly) during the course of construction for the purpose of obtaining Section 202/811 capital advance/loan funds. The information will also be used to identify

the Owner, the project, the type of disbursement being requested, the items to be covered by the disbursement, and the name of the depository holding the Owner's bank account, including the account number.

	Number of respondents	Annual responses	×	Hours per response	=	Burden hours
Reporting burden:	258	2		0.2		258

Total estimated burden hours: 258.

Status: Extension without change a currently approved collection.

Authority: Section 3507 of the Paperwork Reduction Act of 1995, 44 U.S.C. 35, as amended.

Dated: April 3, 2013.

Colette Pollard,

Department Reports Management Officer, Office of the Chief Information Officer.

[FR Doc. 2013–08273 Filed 4–9–13; 8:45 am]

BILLING CODE 4210–67–P

DEPARTMENT OF HOUSING AND URBAN DEVELOPMENT

[Docket No. FR–5692–N–01]

Notice of Submission of Proposed Information Collection to OMB; Standardized Form for Collecting Information Regarding Race and Ethnic Data

AGENCY: Office of Strategic Planning and Management, HUD.

ACTION: Notice of proposed information collection.

SUMMARY: The proposed information collection requirement described below will be submitted to the Office of Management and Budget (OMB) for review, as required by the Paperwork Reduction Act. HUD is soliciting public comments on the subject proposal.

DATES: *Comments Due Date:* June 10, 2013 .

ADDRESSES: Interested persons are invited to submit comments regarding this proposal. Comments should refer to the proposal by name and/or OMB approval number (2535–0113) and should be sent to: Colette Pollard, Departmental Reports Management Officer, QDAM, Department of Housing and Urban Development, 451 Seventh Street SW., Washington, DC 20410; Telephone (202) 402–4300, (this is not a toll-free number) or email Ms. Pollard at *Colette.Pollard@hud.gov;* for a copy of the proposed form and other available information.

FOR FURTHER INFORMATION CONTACT: Dorthera Yorkshire, Grants Management and Oversight Division, Office of Strategic Planning and Management Department of Housing and Urban Development, 451 7th Street SW., Room 3156, Washington, DC 20410; email: *Dorthera.Yorkshire@hud.gov;* telephone (202) 402–4336; Fax (202) 708–0531 (this is not a toll-free number) for other available information. If you are a hearing-or-speech-impaired person, you may reach the above telephone numbers through TTY by calling the toll-free Federal Relay Service at 1–800–877–8339.

SUPPLEMENTARY INFORMATION: This notice informs the public that HUD has submitted to OMB a request for approval of the Information collection described below. This notice is soliciting comments from members of the public and affecting agencies concerning the proposed collection of information to: (1) Evaluate whether the proposed collection of information is necessary for the proper performance of the functions of the agency, including whether the information will have practical utility; (2) Evaluate the accuracy of the agency's estimate of the burden of the proposed collection of information; (3) Enhance the quality, utility, and clarity of the information to be collected; and (4) Minimize the burden of the collection of information on those who are to respond; including through the use of appropriate automated collection techniques or other forms of information technology, e.g., permitting electronic submission of responses.

This Notice also lists the following information:

Title of Proposal: Standardized Form for Collecting Information Regarding Race and Ethnic Data.

OMB Control Number if applicable: 2535–0113.

Description of the need for the information and proposed use: HUD's standardized form for the Collection of Race and Ethnic Data complies with OMB's revised standards for Federal Agencies issued, October 30, 1997. These standards apply to HUD Program Office and partners that collect, maintain, and report Federal Data on race and ethnicity for program administrative reporting.

Agency form numbers, if applicable: HUD–27061, identified on Grants.gov as HUD Race Ethnic Form.

Members of Affected Public: Individuals or Households, Business or other-for-profit, Not-for-profit institutions, State, Local or Tribal Government.

Estimation of the total number of hours needed to prepare the information collection including number of responses, frequency of responses, and hours of responses: This proposal will result in no significant increase in the current information collection burden. An estimation of the total number of hours needed to provide the information for each grant application is 1 hour; however, the burden will be assessed against each individual grant program submission under the Paperwork Reduction Act; number of respondents is an estimated 11,000; 60% of responses will be quarterly and 40% annually.

Status of the proposed information collection: Extension of a currently approved collection.

Authority: The Paperwork Reduction Act of 1995, 44 U.S.C. Chapter 35, as amended.

Dated: April 1, 2013.

Anne Morillon,

Director, Grants Management and Oversight Division, Office of Strategic Planning and Management.

[FR Doc. 2013–08269 Filed 4–9–13; 8:45 am]

BILLING CODE 4210–67–P

DEPARTMENT OF HOUSING AND URBAN DEVELOPMENT

[Docket No. FR–5683–N–29]

Notice of Submission of Proposed Information Collection to OMB Ginnie Mae Multiclass Securities Program Documents

AGENCY: Office of the Chief Information Officer, HUD.

ACTION: Notice.

SUMMARY: The proposed information collection requirement described below has been submitted to the Office of Management and Budget (OMB) for review, as required by the Paperwork Reduction Act. HUD is soliciting public comments on the subject proposal.

This information collection is required in connection with the operation of the Ginnie Mae Multiclass Securities Program. Ginnie Mae's authority to guarantee multiclass instruments is contained in 306(g)(1) of the National Housing Act (''NHA'') (12

U.S.C. 1721(g)(1)), which authorizes Ginnie Mae to guarantee ''securities based on or backed by a trust or pool composed of mortgages'' Multiclass securities are backed by Ginnie Mae securities, which are backed by government insured or guaranteed mortgages. Ginnie Mae's authority to operate a Multiclass Securities Program is recognized in Section 3004 of the Omnibus Budget econciliation Act of 1993 (''OBRA''), which amended 306(g)(3) of the NHA (12 U.S.C. 1271(g)(3)) to provide Ginnie Mae with greater flexibility for the Multiclass Securities Program regarding fee structure, contracting, industry consultation, and program implementation. Congress annually sets Ginnie Mae's commitment authority to guarantee mortgage-backed securities (''MBS'') pursuant to 306(G)(2) of the NHA (12 U.S.C. 1271(g)(2)). Since the multiclass are backed by Ginnie Mae Single Class MBS, Ginnie Mae has already guaranteed the collateral for the multiclass instruments. The Ginnie Mae Multiclass Securities Program consists of Ginnie Mae Real Estate Mortgage Investment Conduit (''REMIC'') securities, Stripped Mortgage-Backed Securities (''SMBS''), and Platinum securities. The Multiclass Securities program provides an important adjunct to Ginnie Mae's secondary mortgage market activities, allowing the private sector to combine and restructure cash flows from Ginnie Mae Single Class MBS into securities that meet unique investor requirements in connection with yield, maturity, and call-option protection. The intent of the Multiclass Securities Program is to increase liquidity in the secondary mortgage market and to attract new sources of capital for federally insured or guaranteed loans. Under this program, Ginnie Mae guarantees, with the full faith and credit of the United States, the timely payment of principal and interest on Ginnie Mae REMIC, SMBS and Platinum securities.

DATES: *Comments Due Date:* May 10, 2013.

ADDRESSES: Interested persons are invited to submit comments regarding this proposal. Comments should refer to the proposal by name and/or OMB approval Number (2503–0030) and should be sent to: HUD Desk Officer, Office of Management and Budget, New Executive Office Building, Washington, DC 20503; fax: 202–395–5806. Email: *OIRA_Submission@omb.eop.gov* fax: 202–395–5806.

FOR FURTHER INFORMATION CONTACT: Colette Pollard., Reports Management Officer, QDAM, Department of Housing and Urban Development, 451 Seventh Street SW., Washington, DC 20410; email Colette Pollard at *Colette.Pollard@hud.gov.* or telephone (202) 402–3400. This is not a toll-free number. Copies of available documents submitted to OMB may be obtained from Ms. Pollard.

SUPPLEMENTARY INFORMATION: This notice informs the public that the Department of Housing and Urban Development has submitted to OMB a request for approval of the Information collection described below. This notice is soliciting comments from members of the public and affecting agencies concerning the proposed collection of information to: (1) Evaluate whether the proposed collection of information is necessary for the proper performance of the functions of the agency, including whether the information will have practical utility; (2) Evaluate the accuracy of the agency's estimate of the burden of the proposed collection of information; (3) Enhance the quality, utility, and clarity of the information to be collected; and (4) Minimize the burden of the collection of information on those who are to respond; including through the use of appropriate automated collection techniques or other forms of information technology, e.g., permitting electronic submission of responses.

This notice also lists the following information:

Title of Proposed: Ginnie Mae Multiclass Securities Program Documents.

OMB Approval Number: 2503–0030.

Form Numbers: None.

Description of the need for the information and proposed use: This information collection is required in connection with the operation of the Ginnie Mae Multiclass Securities Program. Ginnie Mae's authority to guarantee multiclass instruments is contained in 306(g)(1) of the National Housing Act (''NHA'') (12 U.S.C. 1721(g)(1)), which authorizes Ginnie Mae to guarantee ''securities based on or backed by a trust or pool composed of mortgages'' Multiclass securities are backed by Ginnie Mae securities, which are backed by government insured or guaranteed mortgages. Ginnie Mae's authority to operate a Multiclass Securities Program is recognized in Section 3004 of the Omnibus Budget econciliation Act of 1993 (''OBRA''), which amended 306(g)(3) of the NHA (12 U.S.C. 1271(g)(3)) to provide Ginnie Mae with greater flexibility for the Multiclass Securities Program regarding fee structure, contracting, industry consultation, and program implementation. Congress annually sets Ginnie Mae's commitment authority to guarantee mortgage-backed securities (''MBS'') pursuant to 306(G)(2) of the NHA (12 U.S.C. 1271(g)(2)). Since the multiclass are backed by Ginnie Mae Single Class MBS, Ginnie Mae has already guaranteed the collateral for the multiclass instruments. The Ginnie Mae Multiclass Securities Program consists of Ginnie Mae Real Estate Mortgage Investment Conduit (''REMIC'') securities, Stripped Mortgage-Backed Securities (''SMBS''), and Platinum securities. The Multiclass Securities program provides an important adjunct to Ginnie Mae's secondary mortgage market activities, allowing the private sector to combine and restructure cash flows from Ginnie Mae Single Class MBS into securities that meet unique investor requirements in connection with yield, maturity, and call-option protection. The intent of the Multiclass Securities Program is to increase liquidity in the secondary mortgage market and to attract new sources of capital for federally insured or guaranteed loans. Under this program, Ginnie Mae guarantees, with the full faith and credit of the United States, the timely payment of principal and interest on Ginnie Mae REMIC, SMBS and Platinum securities.

	Number of respondents	Annual responses	×	Hours per response	=	Burden hours
Reporting Burden:	15	8		141.108		16,933

Total estimated burden hours: 16,933.

Status: Revision of currently approved collection.

Authority: Section 3507 of the Paperwork Reduction Act of 1995, 44 U.S.C. 35, as amended.

Dated: April 3, 2013.

Colette Pollard,

Department Reports Management Officer, Office of the Chief Information Officer.

[FR Doc. 2013–08271 Filed 4–9–13; 8:45 am]

BILLING CODE 4210–67–P

DEPARTMENT OF HOUSING AND URBAN DEVELOPMENT

[Docket No. FR–5600–FA–19]

Announcement of Funding Awards, Choice Neighborhoods Grant Program, Fiscal Year 2012

AGENCY: Office of the Assistant Secretary for Public and Indian Housing and Office of Multifamily Programs, HUD.

ACTION: Announcement of funding awards.

SUMMARY: In accordance with Section 102(a)(4)(C) of the Department of Housing and Urban Development Reform Act of 1989, this announcement notifies the public of funding decisions made by the Department in a competition for funding under the Fiscal Year 2012 (FY2012) Notice of Funding Availability (NOFA) for the Choice Neighborhoods Planning Grants and the FY2012 NOFA for Choice Neighborhoods Implementation Grants. This announcement contains the consolidated names and addresses of these award recipients under the Choice Neighborhoods Grant Program for FY2012.

FOR FURTHER INFORMATION CONTACT: For questions concerning the Choice Neighborhoods Grant Program awards, contact Ms. Mindy Turbov, Director of the Choice Neighborhoods Program, Office of Public Housing Investments, 451 7th Street SW., Room 4130, Washington, DC 20410, telephone (202) 401–8812. Hearing or speech-impaired individuals may access this number via TTY by calling the toll-free Federal Information Relay Service at (800) 877–8339.

SUPPLEMENTARY INFORMATION: Building upon the successes achieved and the lessons learned from the HOPE VI program, the Choice Neighborhoods Program employs a comprehensive approach to community development centered on housing transformation. The program aims to transform neighborhoods of poverty into viable mixed-income neighborhoods with access to economic opportunities by revitalizing severely distressed public and assisted housing and investing and leveraging investments in well-functioning services, effective schools and education programs, public assets, public transportation, and improved access to jobs. Choice Neighborhoods grants primarily funds the transformation of public and/or HUD-assisted housing developments through preservation, rehabilitation, and management improvements as well as demolition and new construction. In addition, these funds can be used on a limited basis (and combined with other funding) for improvements to the surrounding community, public services, facilities, assets and supportive services. Choice Neighborhoods grant funds are intended to catalyze other investments that will be directed toward necessary community improvements. For FY2012, HUD awarded two types of grants for the Choice Neighborhoods Initiative: Planning Grants and Implementation Grants.

(1) Planning Grants enable those communities that are not yet able to fully undertake a successful neighborhood transformation to build the capacity to do so, with the Federal government supporting their endeavors and incentivizing local support. The Planning Grants enable more communities to create a rigorously developed plan and build support necessary for neighborhood transformation to be successful.

(2) Implementation Grants provide a significant amount of Federal support to those communities that have undergone a comprehensive local planning process and are now moving forward with their ''Transformation Plan'' to redevelop the neighborhood.

The FY2012 Choice Neighborhoods Planning Grant awards totaled $4,950,000 and 17 applicants were selected for funding in a competition, the results of which were announced on October 11, 2012. At that time, and in addition to the applicant and Congressional notification processes, the grantees were posted to the HUD Web site at: *http://portal.hud.gov/hudportal/HUD?src=/press/press_releases_media_advisories/2012/HUDNo.12–164* and *http://portal.hud.gov/hudportal/HUD?src=/program_offices/public_indian_housing/programs/ph/cn/planninggrants.* Applications were scored and selected for funding based on the selection criteria in the FY2012 Choice Neighborhoods Planning Grant NOFA.

The FY2012 Choice Neighborhoods Implementation Grant awards totaled $108,980,000 and four applicants were selected for funding in a competition, the results of which were announced on December 13, 2012. At that time, and in addition to the applicant and Congressional notification processes, the grantees were posted to the HUD Web site at: *http://portal.hud.gov/hudportal/HUD?src=/press/press_releases_media_advisories/2012/HUDNo.12–193* and *http://portal.hud.gov/hudportal/HUD?src=/program_offices/public_indian_housing/programs/ph/cn/grants.* Applications were scored and selected for funding based on the selection criteria in the FY2012 Choice Neighborhoods Implementation Grant NOFA.

In accordance with Section 102 (a)(4)(C) of the Department of Housing and Urban Development Reform Act of 1989 (103 Stat.1987, 42 U.S.C. 3545), the Department is publishing the names, addresses, and amounts of the Choice Neighborhoods awards made under the competition in Appendix A to this document.

Dated: April 4, 2013.

Sandra B. Henriquez,

Assistant Secretary for Public and Indian Housing.

Appendix A

Choice Neighborhoods Planning lead grantee name and contact information	Amount funded	Project funded
Boston Housing Authority, 52 Chauncy Street, Boston, MA 02111–2325	$300,000	Whittier Street Apartments; Whittier neighborhood.
BRIDGE Housing Corporation, 345 Spear Street, Suite 700, San Francisco, CA 94105–1673 (project is located in San Francisco, CA).	300,000	Potrero Terrace and Potrero Annex; South Potrero neighborhood.
City of Roanoke Redevelopment and Housing Authority, 2624 Salem Turnpike NW., Roanoke, VA 24017–5334.	200,000	Lansdown Park and Melrose Towers; Loudon-Melrose/Shenandoah West neighborhood.

Choice Neighborhoods Planning lead grantee name and contact information	Amount funded	Project funded
County of Pasco, 8731 Citizens Drive, Suite 340, New Port Richey, FL 34654–5598 (project is located in Dade City, FL).	300,000	Cypress Villas II; Lacoochee-Trilby neighborhood.
District of Columbia Housing Authority, 1133 North Capitol Street NE., Washington, DC 20002–1345.	300,000	Barry Farm Dwellings and Wade Apartments; Barry Farm neighborhood.
Housing Authority of the City of Austin, 1124 S. Interstate Highway 35, Austin, TX 78704–2614.	300,000	Rosewood Courts; Rosewood neighborhood.
Housing Authority of the City of Camden, 2021 Watson Street 2nd Floor, Camden, NJ 08105–1866.	300,000	Clement T. Branch Village and J. Allen Nimmo Court; Mt. Ephraim Corridor neighborhood.
Housing Authority of the City of Columbia, 1917 Harden Street, Columbia, SC 29204–1015.	250,000	Allen Benedict Court and Gonzales Gardens; East Central Columbia neighborhood.
Housing Authority of the City of Durham, 330 East Main Street, Durham, NC 27701–3718.	300,000	McDougald Terrace; Southeast Central neighborhood.
Housing Authority of the City of Spartanburg, 201 Caulder Avenue, Suite A, Spartanburg, SC 29306–5640.	300,000	Archibald Rutledge Highrise and Oakview Apartments; Northside neighborhood.
Kingsport Housing and Redevelopment Authority, 906 East Sevier Avenue, Kingsport, TN 37662–0044.	300,000	Robert E. Lee Apartments; Midtown neighborhood.
Municipal Housing Authority for the City of Yonkers, 1511 Central Park Avenue, Yonkers, NY 10710–5942.	300,000	Cottage Gardens; Croton Heights/Cottage Place Gardens neighborhood.
New York City Housing Authority, 250 Broadway, 11th Floor, New York, NY 10007–2516.	300,000	Betances; Mott Haven, Bronx, NY neighborhood.
Newark Housing Authority, 500 Broad Street, Newark, NJ 07102–3112	300,000	Seth Boyden Terrace; Dayton Street neighborhood.
Sunnydale Development Co., LLC, 1360 Mission Street, Suite 300, San Francisco, CA 94103–2626 (project is located in San Francisco, CA).	300,000	Sunnydale-Velasco; Sunnydale/Visitacion Valley neighborhood.
The Michaels Development Company I, L.P., 3 East Stow Road, Suite 100, Marlton, NJ 08053–3188 (project is located in Honolulu, HI).	300,000	KPT lowrises and Kuhio Homes; Kuhio Park neighborhood.
Woonsocket neighborhood Development Corporation d/b/a, NeighborWorks Blackstone River Valley, 719 Front Street, Suite 103, Woonsocket, RI 02895–5287.	300,000	Veterans Memorial Housing Development; Our neighborhood.s' Planning District neighborhood.
Total	$4,950,000	

Choice neighborhoods implementation lead grantee name and contact information	Amount funded	Project funded
The Community Builders, Inc., 95 Berkeley Street, Suite 500, Boston, MA 02116–6229 (project is located in Cincinnati, OH).	29,500,000	Alameda, Crescent Court, Poinciana, Maple, Somerset Apartments; Avondale neighborhood.
San Antonio Housing Authority, 818 S. Flores, San Antonio, TX 78204–1430	29,750,000	Wheatley Courts; Eastside neighborhood.
Housing Authority of the City of Seattle, 120 6th Avenue North, Seattle, WA 98109–5002.	19,730,000	Yesler Terrace; Yesler neighborhood.
Housing Authority of the City Tampa, 1529 W. Main Street, Tampa, FL 33607–4415.	30,000,000	Central Park Village; Central Park/Ybor neighborhood.
Total	108,980,000	

[FR Doc. 2013–08276 Filed 4–9–13; 8:45 am]

BILLING CODE 4210–67–P

DEPARTMENT OF HOUSING AND URBAN DEVELOPMENT

[Docket No. FR–5705–N–01]

Notice of a Federal Advisory Committee Meeting: Manufactured Housing Consensus Committee Structural and Design Subcommittee

AGENCY: Office of the Assistant Secretary for Housing—Federal Housing Commissioner, Department of Housing and Urban Development (HUD).

ACTION: Notice of a Federal advisory committee Structural and Design Subcommittee teleconference meeting.

SUMMARY: This notice sets forth the schedule and proposed agenda for a teleconference meeting of the Manufactured Housing Consensus Committee (MHCC), Structural and Design Subcommittee. The teleconference meeting is open to the public. The agenda provides an opportunity for citizens to comment on the business before the Subcommittee.

DATES: The teleconference meeting will be held on April 23, 2013, from 1:00 p.m. to 4:00 p.m. EST. The teleconference numbers are: US toll-free: 1–855–747–8824, and US toll: 1–719–325–2630; Participant Code: 547096.

FOR FURTHER INFORMATION CONTACT: Henry S. Czauski, Acting Deputy Administrator and Designated Federal Official (DFO), Office of Manufactured Housing Programs, Department of Housing and Urban Development, 451 Seventh Street SW., Room 9166, Washington, DC 20410, telephone 202–708–6423 (this is not a toll-free number). Persons who have difficulty hearing or speaking may access this number via TTY by calling the toll-free Federal Information Relay Service at 800–877–8339.

SUPPLEMENTARY INFORMATION: Notice of this meeting is provided in accordance with the Federal Advisory Committee

Act, 5. U.S.C. App. 10(a)(2) through implementing regulations at 41 CFR 102–3.150. The MHCC was established by the National Manufactured Housing Construction and Safety Standards Act of 1974 (42 U.S.C. 5401 *et seq.*) as amended by the Manufactured Housing Improvement Act of 2000 (Pub. L. 106–569). According to 42 U.S.C. 5403, as amended, the purposes of the MHCC are to:

- Provide periodic recommendations to the Secretary to adopt, revise, and interpret the Federal manufactured housing construction and safety standards;
- Provide periodic recommendations to the Secretary to adopt, revise, and interpret the procedural and enforcement regulations, including regulations specifying the permissible scope and conduct of monitoring; and
- Be organized and carry out its business in a manner that guarantees a fair opportunity for the expression and consideration of various positions and for public participation.

The MHCC is deemed an advisory committee not composed of Federal employees.

Public Comment: Citizens wishing to make oral comments on the business of the MHCC Structural and Design Subcommittee are encouraged to register by or before April 17, 2013, by contacting the National Fire Protection Association, *attention:* Robert Solomon, by mail to: One Batterymarch Park, P.O. Box 9101, Quincy, Massachusetts 02169, or by fax to 617–984–7110, or by email to *Imackay@nfpa.org.*

Written comments are encouraged. The MHCC Structural and Design Subcommittee strives to accommodate citizen comments to the extent possible within the time constraints of the meeting agenda. Advance registration is strongly encouraged. The MHCC will also provide an opportunity for public comment on specific matters before the Structural and Design Subcommittee.

Tentative Agenda

April 23, 2013 from 1:00 p.m. to 4:00 p.m. EST

I. Welcome & Opening Remarks: Chair & DFO

II. Review and Approve Subcommittee Meeting Minutes—Dated 10–23–12 to 10–25–12

III. Review Log of Proposal:

Log #1 24 CFR 3285—Alternative Foundation System Testing.

Log #80 24 CFR 3280.406—Formaldehyde Testing; Video explaining ASTM E1333: *http://www.ntainc.com/video-fhydelarge.html*; Video explaining ASTM D6007: *http://www.ntainc.com/video-fhyde.html.*

Log #81 24 CFR 3280.403—Update reference standard for windows and sliding glass doors.

Log #82 24 CFR 3280.404—Update reference standard for windows and sliding glass doors.

Log #83 24 CFR 3280.405—Update reference standard for swinging exterior passage doors.

IV. Adjourn: 4:00 p.m.

Dated: April 4, 2013.

Laura Marin,

Acting General Deputy Assistant Secretary for Housing.

[FR Doc. 2013–08265 Filed 4–9–13; 8:45 am]

BILLING CODE 4210–67–P

DEPARTMENT OF THE INTERIOR

Fish and Wildlife Service

[FWS–R8–R–2012–N251; FXRS12650800000–112–FF08R0000]

Don Edwards San Francisco Bay National Wildlife Refuge, Alameda, Santa Clara, and San Mateo Counties, CA

AGENCY: Fish and Wildlife Service, Interior.

ACTION: Notice of availability.

SUMMARY: We, the U.S. Fish and Wildlife Service (Service), announce the availability of our final Comprehensive Conservation Plan (CCP) and finding of no significant impact (FONSI) for the Don Edwards San Francisco Bay National Wildlife Refuge (Refuge). In the CCP, we describe how we will manage the Refuge for the next 15 years.

DATES: The CCP and FONSI are available now. The FONSI was signed on October 10, 2012. Implementation of the CCP may begin immediately.

ADDRESSES: You may view or obtain copies of the final CCP and FONSI by any of the following methods. You may request a hard copy or CD–ROM.

Agency Web site: Download a copy of the document(s) at *http://www.fws.gov/cno/refuges/DonEdwards/DonEdwards.cfm.*

Email: sfbaynwrc@fws.gov. Include ''DESFB CCP'' in the subject line of the message.

Fax: Attn: Winnie Chan, (510) 792–5828.

Mail: U.S. Fish and Wildlife Service, San Francisco Bay NWR Complex, 1 Marshlands Road, Fremont, CA 94555.

In-Person Viewing or Pickup: Copies of the Final CCP and FONSI may also be viewed at the San Francisco Bay National Wildlife Refuge Complex, 1 Marshlands Road, Fremont, CA 94555 (510) 792–0222.

FOR FURTHER INFORMATION CONTACT: Winnie Chan, Planning Team Leader, at (510) 792–0222 (See **ADDRESSES**), or Eric Mruz, Refuge Manager, at (510) 792–0222.

SUPPLEMENTARY INFORMATION:

Background

Don Edwards San Francisco Bay National Wildlife Refuge was established in 1972 pursuant to the Act Authorizing the Transfer of Certain Real Property for Wildlife, or other purposes (16 U.S.C. 667b), Endangered Species Act of 1973 (16 U.S.C. 1531 et seq.), and the Fish and Wildlife Act of 1956 (16 U.S.C. 742f(b)(1)). The roughly 30,000-acre Don Edwards San Francisco Bay National Wildlife Refuge, located in the Alameda, Santa Clara, and San Mateo Counties of California, consists of several noncontiguous parcels divided into four management units that surround the southern edge of the San Francisco Bay. The Refuge was established to preserve and enhance wildlife habitat, protect migratory birds, and protect threatened and endangered species. The Refuge also provides opportunities for wildlife-dependent recreation and environmental education.

We announce our decision and the availability of the FONSI for the final CCP for Don Edwards San Francisco Bay in accordance with National Environmental Policy Act (NEPA) (40 CFR 1506.6(b)) requirements. We completed a thorough analysis of impacts on the human environment, which we included in the environmental assessment (EA) that accompanied the draft CCP.

The National Wildlife Refuge System Administration Act of 1966 (16 U.S.C. 668dd-668ee) (Administration Act), as amended by the National Wildlife Refuge System Improvement Act of 1997, requires us to develop a CCP for each national wildlife refuge. The purpose for developing a CCP is to provide refuge managers with a 15-year plan for achieving refuge purposes and contributing toward the mission of the National Wildlife Refuge System, consistent with sound principles of fish and wildlife management, conservation, legal mandates, and our policies. In addition to outlining broad management direction on conserving wildlife and their habitats, CCPs identify wildlife-dependent recreational opportunities available to the public, including opportunities for hunting, fishing, wildlife observation and photography, and environmental education and

interpretation. We intend to review and update the CCP at least every 15 years in accordance with the Administration Act.

Our Draft CCP and EA were available for a 45-day public review and comment period, which we announced via several methods, including press releases, updates to constituents, and a **Federal Register** notice (77 FR 28895, May 16, 2012). The Draft CCP/EA identified and evaluated three alternatives for managing the Refuge for the next 15 years.

Under Alternative A (no action alternative), the current management actions, including habitat management, wildlife management, wildlife-oriented recreation opportunities, and environmental education, would be continued. Current staffing and funding would remain the same. Existing restoration and management plans (e.g., Bair Island Restoration and Management Plan and South Bay Salt Pond Restoration Project) would continue to be implemented. We would also actively work with partners and willing sellers to acquire the remaining lands within the approved acquisition boundary.

Alternative B (preferred alternative) includes those actions in Alternative A. In addition, we would moderately expand biological, habitat management, visitor service, and environmental education activities. Refuge staff would expand the volunteer program to recruit new volunteers and provide additional learning opportunities to existing volunteers. Additional staff and funding would be needed to implement this alternative.

Under Alternative C, in addition to tasks included in Alternative A and B, we would increase the frequency of baseline monitoring, investigate reintroduction of listed species (e.g., the salt marsh harvest mouse and the California clapper rail), survey for listed plant species, and encourage additional research to benefit listed species. Additional staff and funding would be needed to implement this alternative.

We received eighteen letters on the Draft CCP and EA during the review and comment period. Comments focused upon the meaning of an ''approved acquisition boundary'' and the scope of our authority within the approved boundary, applicability of state health and safety codes in relation to mosquito management on the Refuge, and wildlife-public use conflicts. We incorporated comments we received into the CCP when appropriate, and we responded to the comments in an appendix to the CCP. In the FONSI, we selected Alternative B for implementation. The FONSI documents our decision and is based on the information and analysis contained in the EA.

Under the selected alternative, the Service will expand both natural resource management and visitor services opportunities on the Refuge. Additional biological activities would include baseline surveys on native flora and fauna, as well as a revised predator management program to include avian predators. Habitat would be improved along the marsh-upland ecotone to benefit tidal marsh species as well as for the western snowy plover and California least tern. Other habitat management activities would include development of a comprehensive weed management plan, addressing climate change impacts on Refuge resources, and efforts to acquire additional lands to meet Refuge purposes. A mosquito management plan would be implemented to improve coordination with local mosquito abatement districts to manage the threat of mosquito-borne disease on the Refuge. The mosquito management plan would be developed in accordance with Service policies.

Visitor services will be expanded considerably through interpretation and environmental education opportunities. A wildlife photography permit system would be implemented to expand additional wildlife photography opportunities. Dog walking would be limited primarily to upland trails in order to further protect tidal marsh areas. A new LEED-certified visitor center complex would be constructed and additional interpretation activities would be provided. The environmental education program would be updated and expanded in several ways, such as through a LEED-certified remodel of the Environmental Education Center, Spanish translation of materials and curriculum, and adding programs at different sites. The volunteer program would be expanded through improving training for volunteers and developing permanent stewardship projects.

The selected alternative best meets the Refuges' purposes, vision, and goals; contributes to the Refuge System mission; addresses the significant issues and relevant mandates; and is consistent with principles of sound fish and wildlife management. Based on the associated environmental assessment, this alternative is not expected to result in significant environmental impacts and therefore does not require an environmental impact statement.

Paul B. McKim,

Acting Regional Director, Pacific Southwest Region, Sacramento, California.

[FR Doc. 2013–08338 Filed 4–9–13; 8:45 am]

BILLING CODE 4310–55–P

DEPARTMENT OF THE INTERIOR

National Indian Gaming Commission

Notice of Intent to Prepare a Supplemental Environmental Impact Statement for the Approval of a Gaming Management Contract

AGENCY: National Indian Gaming Commission, Interior.

ACTION: Notice.

SUMMARY: This notice advises the public that the National Indian Gaming Commission (NIGC) as lead agency, in cooperation with the Jamul Indian Village (Tribe), intends to gather information necessary to prepare a supplemental environmental impact statement (SEIS) for the proposed Gaming Management Contract between the Tribe and San Diego Gaming Ventures, LLC (SDGV). The Gaming Management Contract, if approved, would allow SDGV to manage the approved 203,000 square foot tribal gaming facility to be located on the Tribe's Reservation, which qualifies as ''Indian Lands'' pursuant to 25 U.S.C. 2703.

The Bureau of Indian Affairs (BIA), Pacific Region, Division of Environmental, Cultural Resources Management & Safety will serve as environmental staff to the NIGC in the preparation of the SEIS. As such, the BIA is the contact for further information, in lieu of the NIGC.

This notice also announces that no public scoping meeting will be held for the SEIS.

DATES: Written comments on the scope and implementation of this proposal must arrive by May 10, 2013. No public scoping meeting will be held for the proposal given the long history of the project and the extensive public input received to-date.

ADDRESSES: You may mail, email, hand carry or fax written comments to: Mr. John Rydzik, Chief, Division of Environmental, Cultural Resources Management &Safety, Bureau of Indian Affairs, Pacific Region, 2800 Cottage Way, Sacramento, CA 95825; Facsimile (916) 978–6055; Email *john.rydzik@bia.gov.*

FOR FURTHER INFORMATION CONTACT: Mr. John Rydzik (916) 978–6051.

SUPPLEMENTARY INFORMATION: The Tribe is requesting NIGC approval of a Gaming Management Contract between the Tribe and SDGV for the management of a 203,000 square foot gaming facility on the Tribe's Reservation, which is located in unincorporated San Diego County approximately 1-mile south of the unincorporated community of Jamul. Pursuant to the Indian Gaming Regulatory Act, signed into law on October 17, 1988, the Tribe may enter into a Gaming Management Contract for the operation and management of a gaming facility subject to the approval of the NIGC. The purpose of the Proposed Action is to help provide for the economic development of the Jamul Reservation.

The enterprise to be managed includes a gaming facility, a multi-level parking structure, surface parking lot, fire-fighting facilities, wastewater treatment plant/disposal facilities, water delivery system, and improved on-site traffic circulation. The main use within the gaming facility is the gaming floor, which would contain slot machines, table games, and poker entertainment. The total estimated gaming floor area for the gaming facility is 70,000 square feet. The exterior of the complex would include downcast lighting consistent with San Diego County codes and ordinances to maintain consistency with the surrounding area.

The environmental effects of a gaming facility on the Tribe's Reservation has been extensively studied and evaluated since 2000 when the Tribe originally approached the BIA and NIGC with fee-to-trust and Gaming Management Contract requests. Serving as the lead agency for these initial requests, the BIA originally developed and published an environmental assessment (EA) on February 1, 2001. The NIGC served as a Cooperating Agency for this early request. The Final EA was completed and published in November 2001. Following a decision by the BIA and NIGC that the mitigation measures in the EA were too provisional, the BIA and NIGC developed an environmental impact statement (EIS) for the proposed fee-to-trust and Management Contract requests. The notice of intent for the EIS was published in the **Federal Register** on April 2, 2002 (67 FR 15583). The notice of availability for the Draft EIS was published in the **Federal Register** on January 17, 2003 (68 FR 2538). After release of the Draft EIS, a public meeting was held on February 6, 2003 at the El Cajon Community Center to take comments from the public. Following receipt and consideration of all comments on the Draft EIS, the notice of availability of the Final EIS was published on November 14, 2003 (68 FR 64622).

Between late 2003 and early 2006, the Tribe revised their project to eliminate the fee-to-trust component and to reconfigure all uses onto the existing Reservation except for an access road, which is designed to travel through adjacent tribally owned land connecting the Reservation with State Route 94. The project modifications were evaluated by the Tribe in a Tribal Environmental Impact Statement/Report (December 2006). Additional changes to the project resulted in the release of a Draft Tribal Environmental Evaluation (Tribal EE) in March 2012 and a Final Tribal EE in January 2013. Between release of the Draft and Final Tribal EE, the Tribe provided a public comment period and held a public meeting to accept comments on the Draft Tribal EE. All written and oral comments provided by the public during the comment period were responded to and incorporated into the Final Tribal EE. The Final Tribal EE was certified as adequate and complete by the Tribe in January 2013. Now that the Tribe has completed the final version of the proposed gaming facility, they are requesting NIGC approval of a Gaming Management Contract between the Tribe and SDGV.

The gaming facility has always been designed to be located on the Reservation; however, other uses such as the wastewater treatment/disposal facilities, fire-fighting facilities, and structured parking were designed to be located on adjacent land north of the Reservation. The reconfiguration of uses to place all features on the Reservation, together with the passage of time since the Final EIS was circulated, has resulted in the need for the NIGC to develop and issue an SEIS to address these changes. No other alternatives will be addressed in the SEIS.

Issues to be addressed in the SEIS include updating the environmental baseline and impact/mitigation analysis of the 2003 Final EIS as it relates to the new design alternative. Areas to be analyzed include land resources, water resources, air quality, biological resources, cultural and paleontological resources, socioeconomics, transportation, land use, agriculture, public services, noise, hazardous materials and visual resources.

Directions for Submitting Public Comments: Please include your name, return address, and the caption ''SEIS Jamul Gaming Project'' on the first page of any written comments you submit. Please note that comments will only be received in writing by email, facsimile or regular mail. Pursuant to 40 CFR 1502.9, no public scoping meeting will be held for this SEIS.

Public Availability of Comments: Comments, including names and addresses of respondents, will be available for public review at the BIA, Pacific Region address shown in the **ADDRESSES** section of this notice, during regular business hours, Monday through Friday, except holidays. Before including your address, phone number, email address, or other personal identifying information in your comment, you should be aware that your entire comment—including your personal identifying information—may be made publicly available at any time. While you can ask us in your comment to withhold your personal identifying information from public review, we cannot guarantee that we will be able to do so.

Authority: This notice is published in accordance with 25 U.S.C. 2711, section 1501.7 of the Council on Environmental Quality Regulations (40 CFR parts 1500 through 1508), and the Department of the Interior regulations (43 CFR part 46), implementing the procedural requirements of NEPA, as amended (42 U.S.C. 4321 et seq.).

Dated: April 4, 2013.

Dawn Houle,

Chief of Staff.

[FR Doc. 2013–08267 Filed 4–9–13; 8:45 am]

BILLING CODE 7565–01–P

DEPARTMENT OF THE INTERIOR

National Park Service

[NPS–WASO–NAGPRA–12465; PCU00RP14.R50000–PPWOCRADN0]

Notice of Inventory Completion: Center for Archaeological Research at the University of Texas at San Antonio, TX

AGENCY: National Park Service, Interior.

ACTION: Notice.

SUMMARY: The Center for Archaeological Research at the University of Texas at San Antonio has completed an inventory of human remains, in consultation with the appropriate Indian tribe, and has determined that there is a cultural affiliation between the human remains and a present-day Indian tribe. Representatives of any Indian tribe that believes itself to be culturally affiliated with the human remains may contact the Center for Archaeological Research at the University of Texas at San Antonio. Repatriation of the human remains to the Indian tribe stated below may occur

if no additional claimants come forward.

DATES: Representatives of any Indian tribe that believes it has a cultural affiliation with the human remains should contact the Center for Archaeological Research at the University of Texas at San Antonio at the address below by May 10, 2013.

ADDRESSES: Cynthia Munoz, Center for Archaeological Research, 1 UTSA Circle, San Antonio, TX 78249, telephone (210) 458–4394.

SUPPLEMENTARY INFORMATION: Notice is here given in accordance with the Native American Graves Protection and Repatriation Act (NAGPRA), 25 U.S.C. 3003, of the completion of an inventory of human remains in the possession of the Center for Archaeological Research at the University of Texas at San Antonio, TX. The human remains were removed from site 41ZP144 in San Ygnacio, Zapata County, TX.

This notice is published as part of the National Park Service's administrative responsibilities under NAGPRA, 25 U.S.C. 3003(d)(3). The determinations in this notice are the sole responsibility of the museum, institution, or Federal agency that has control of the Native American human remains. The National Park Service is not responsible for the determinations in this notice.

Consultation

A detailed assessment of the human remains was made by the Center for Archaeological Research at the University of Texas at San Antonio professional staff in consultation with representatives of the Mescalero Apache Tribe of the Mescalero Reservation, New Mexico.

History and Description of the Remains

In December 2012, as a result of a court order, human remains representing, at minimum, one individual were removed from site 41ZP144 in Zapata County, TX. The partial remains were recovered from a single grave in a prehistoric site in San Ygnacio. The burial was located under a paved street on a high terrace, 55 meters east of the Rio Grande River. In late 1991, the San Ygnacio Municipal Utility District was engaged in trenching for a wastewater pipeline installation. During the course of this work, the human remains were accidentally unearthed under caliche road material. Portions of the remains, consisting of the skull, vertebrae, rib cage, and left arm, were damaged by excavation machinery. The trenching was monitored by Archaeology Consultants Inc. of George West Texas. Work was stopped in the area of the find and the Zapata County Sheriff's office, the Texas Antiquities Committee, and the Office of the State Archeologist were contacted. The agencies agreed that the burial should only be exposed to the extent needed to determine its identity. The burial was determined to be Native American based on mussel shells and lithic debitage encountered in the burial fill. A radiocarbon assay of a bone sample dated the remains to AD 1400. The remains were reburied and a paved road was constructed over the burial. The 1991 work is reported in an archeological report titled: *Monitoring for Cultural Resources in the San Ygnacio Wastewater Improvement Project, Zapata County, Texas,* by James E. Warren.

In 2012, a Petition for Removal of Remains was filed by Zapata County. The petition was heard by the 49th Judicial Court of Webb-Zapata County and a court order was issued to allow for the removal of the human remains. The County of Zapata contracted with the Center for Archaeological Research at the University of Texas at San Antonio to exhume the burial. The partial remains of one adult individual were recovered. The remains are represented primarily by fragmented elements of the cranial vault, the right arm, the sacrum, the pelvis, and both legs. The sex of this individual is female based on traits associated with the pelvis. A specific age range determination was not possible; however, morphologic traits indicate that these remains are those of an adult who, most likely, was 20–35 years old at the time of death. No known individual was identified. No associated funerary objects are present.

The context and date of the burial (AD 1400) demonstrate the remains are of Native American ancestry. The femora are platymeric, a trait associated with Native Americans. Given the absence of associated artifacts, it is not possible to ascribe tribal affiliation, though the burial location is within the region of South Texas first inhabited by the Coahuiltecans (not a Federally-recognized tribe) and later by the Apaches. Apache tribes entered Texas relatively late in time, appearing in the Panhandle region in the 1500s, and in south Texas in the 1700s. This site is located within the land claim areas of the Mescalero Apache Tribe of the Mescalero Reservation, New Mexico.

Determinations Made by the Center for Archaeological Research at the University of Texas at San Antonio

Officials of the Center for Archaeological Research at the University of Texas at San Antonio have determined that:

- Pursuant to 25 U.S.C. 3001(9), the human remains described in this notice represent the physical remains of one individual of Native American ancestry.
- Pursuant to 25 U.S.C. 3001(2), there is a relationship of shared group identity that can be reasonably traced between the Native American human remains and the Mescalero Apache Tribe of the Mescalero Reservation, New Mexico.

Additional Requestors and Disposition

Representatives of any Indian tribe that believes itself to be culturally affiliated with the human remains should contact Cynthia Munoz, Center for Archaeological Research, 1 UTSA Circle, San Antonio, Texas, 78249, telephone (210) 458–4394, by May 10, 2013. Repatriation of the human remains to the Mescalero Apache Tribe of the Mescalero Reservation, New Mexico may proceed after that date if no additional claimants come forward.

The Center for Archaeological Research at the University of Texas at San Antonio is responsible for notifying the Mescalero Apache Tribe of the Mescalero Reservation New Mexico that this notice has been published.

Dated: February 28, 2013.

Sherry Hutt,

Manager, National NAGPRA Program.

[FR Doc. 2013–08370 Filed 4–9–13; 8:45 am]

BILLING CODE 4312–50–P

DEPARTMENT OF THE INTERIOR

National Park Service

[NPS–WASO–NAGPRA–12549; PPWOCRADN0–PCU00RP14.R50000]

Notice of Inventory Completion: U.S. Department of the Interior, National Park Service, Grand Canyon National Park, Grand Canyon, AZ

AGENCY: National Park Service, Interior.

ACTION: Notice.

SUMMARY: The U.S. Department of the Interior, National Park Service, Grand Canyon National Park has completed an inventory of human remains, in consultation with the appropriate Indian tribes, and has determined that there is a cultural affiliation between the human remains and present-day Indian tribes. Representatives of any Indian tribe that believes itself to be culturally affiliated with the human remains may contact Grand Canyon National Park. Repatriation of the human remains to the Indian tribes stated below may occur

if no additional claimants come forward.

DATES: Representatives of any Indian tribe that believes it has a cultural affiliation with the human remains and associated funerary objects should contact Grand Canyon National Park at the address below by May 10, 2013.

ADDRESSES: David Uberuaga, Superintendent, Grand Canyon National Park, P.O. Box 129, Grand Canyon, AZ 86023, telephone (928) 638–7945.

SUPPLEMENTARY INFORMATION: Notice is here given in accordance with the Native American Graves Protection and Repatriation Act (NAGPRA), 25 U.S.C. 3003, of the completion of an inventory of human remains in the possession of Grand Canyon National Park, Grand Canyon, AZ. The human remains were removed from within Grand Canyon National Park, Coconino County, AZ.

This notice is published as part of the National Park Service's administrative responsibilities under NAGPRA, 25 U.S.C. 3003(d)(3). The determinations in this notice are the sole responsibility of the Superintendent, Grand Canyon National Park.

Consultation

A detailed assessment of the human remains was made by Grand Canyon National Park professional staff in consultation with representatives of the Havasupai Tribe of the Havasupai Reservation, Arizona; Hopi Tribe of Arizona; Hualapai Indian Tribe of the Hualapai Indian Reservation, Arizona; Kaibab Band of Paiute Indians of the Kaibab Indian Reservation, Arizona; Las Vegas Tribe of Paiute Indians of the Las Vegas Indian Colony, Nevada; Moapa Band of Paiute Indians of the Moapa River Indian Reservation, Nevada; Navajo Nation, Arizona, New Mexico, & Utah; Paiute Indian Tribe of Utah (Cedar Band of Paiutes, Kanosh Band of Paiutes, Koosharem Band of Paiutes, Indian Peaks Band of Paiutes, and Shivwits Band of Paiutes) (formerly Paiute Indian Tribe of Utah (Cedar City Band of Paiutes, Kanosh Band of Paiutes, Koosharem Band of Paiutes, Indian Peaks Band of Paiutes, and Shivwits Band of Paiutes)); San Juan Southern Paiute Tribe of Arizona; White Mountain Apache Tribe of the Fort Apache Reservation, Arizona; Yavapai-Apache Nation of the Camp Verde Indian Reservation, Arizona; and Zuni Tribe of the Zuni Reservation, New Mexico (hereafter referred to as ''The Tribes'').

History and Description of the Remains

In 1967–1968, human remains representing a minimum of six individuals were removed from the Unkar Delta site in Coconino County, AZ, during legally authorized excavations by the School of American Research under the direction of Douglas W. Schwartz. The human remains were curated at the School of American Research until 1980, when they were transferred to the University of Arizona, Tucson, AZ. In 2006, the human remains were transferred to Grand Canyon National Park. No known individuals were identified. No associated funerary objects are present.

The Unkar Delta site is a complex of 52 agricultural and habitation areas spread across 300 acres. Site architecture, cross-dating, ceramics, and tools indicate that the site was occupied between A.D. 750 and 1200. Three culturally distinct groups of people are represented at Unkar Delta—the Virgin and Kayenta branches of the ancestral Puebloan peoples and the Cohonina people.

Architectural similarities, geography, and material culture indicate close cultural and historical ties between the ancestral Puebloan peoples and the Hopi Tribe of Arizona and Zuni Tribe of the Zuni Indian Reservation, New Mexico.

Archeological assemblages, geography, place names, and oral history indicate cultural and historical ties between the inhabitants of the Unkar Delta and several of the Southern Paiute tribes (Kaibab Band of Paiute Indians, Las Vegas Tribe of Paiute Indians, Moapa Band of Paiute Indians, San Juan Southern Paiute Tribe of Arizona, and Shivwits Band of Paiutes).

Geography and oral history indicate close historical ties between the inhabitants of the Unkar Delta and the Havasupai Tribe of the Havasupai Reservation, Arizona.

Determinations Made by Grand Canyon National Park

Officials of Grand Canyon National Park have determined that:

- Pursuant to 25 U.S.C. 3001(9), the human remains described in this notice represent the physical remains of six individuals of Native American ancestry.
- Pursuant to 25 U.S.C. 3001(2), there is a relationship of shared group identity that can be reasonably traced between the Native American human remains and the Havasupai Tribe of the Havasupai Reservation, Arizona; Hopi Tribe of Arizona; Kaibab Band of Paiute Indians of the Kaibab Indian Reservation, Arizona; Las Vegas Tribe of Paiute Indians of the Las Vegas Indian Colony, Nevada; Moapa Band of Paiute Indians of the Moapa River Indian Reservation, Nevada; Paiute Indian Tribe of Utah (Cedar Band of Paiutes, Kanosh Band of Paiutes, Koosharem Band of Paiutes, Indian Peaks Band of Paiutes, and Shivwits Band of Paiutes) (formerly Paiute Indian Tribe of Utah (Cedar City Band of Paiutes, Kanosh Band of Paiutes, Koosharem Band of Paiutes, Indian Peaks Band of Paiutes, and Shivwits Band of Paiutes)); San Juan Southern Paiute Tribe of Arizona; and Zuni Tribe of the Zuni Reservation, New Mexico.

Additional Requestors and Disposition

Representatives of any Indian tribe that believes itself to be culturally affiliated with the human remains should contact David Uberuaga, Superintendent, Grand Canyon National Park, P.O. Box 129, Grand Canyon, AZ 86023, telephone (928) 638–7945, before May 10, 2013. Repatriation of the human remains to the Havasupai Tribe of the Havasupai Reservation, Arizona; Hopi Tribe of Arizona; Kaibab Band of Paiute Indians of the Kaibab Indian Reservation, Arizona; Las Vegas Tribe of Paiute Indians of the Las Vegas Indian Colony, Nevada; Moapa Band of Paiute Indians of the Moapa River Indian Reservation, Nevada; Paiute Indian Tribe of Utah (Cedar Band of Paiutes, Kanosh Band of Paiutes, Koosharem Band of Paiutes, Indian Peaks Band of Paiutes, and Shivwits Band of Paiutes) (formerly Paiute Indian Tribe of Utah (Cedar City Band of Paiutes, Kanosh Band of Paiutes, Koosharem Band of Paiutes, Indian Peaks Band of Paiutes, and Shivwits Band of Paiutes)); San Juan Southern Paiute Tribe of Arizona; and Zuni Tribe of the Zuni Reservation, New Mexico may proceed after that date if no additional claimants come forward.

Grand Canyon National Park is responsible for notifying The Tribes that this notice has been published.

Dated: March 11, 2013.

Sherry Hutt,

Manager, National NAGPRA Program.

[FR Doc. 2013–08377 Filed 4–9–13; 8:45 am]

BILLING CODE 4312–50–P

DEPARTMENT OF THE INTERIOR

National Park Service

[NPS–WASO–NAGPRA–12619; [PPWOCRADN0–PCU00RP14.R50000]

Notice of Inventory Completion: Central Washington University, Ellensburg, WA

AGENCY: National Park Service, Interior.

ACTION: Notice.

SUMMARY: Central Washington University has completed an inventory of human remains, in consultation with the appropriate Indian tribes or Native Hawaiian organizations, and has determined that there is no cultural affiliation between the human remains and any present-day Indian tribes or Native Hawaiian organizations. Representatives of any Indian tribe or Native Hawaiian organization not identified in this notice that wish to request transfer of control of these human remains should submit a written request to Central Washington University. If no additional requestors come forward, transfer of control of the human remains to the non-Federally recognized Indian group stated in this notice may proceed.

DATES: Representatives of any Indian tribe or Native Hawaiian organization not identified in this notice that wish to request transfer of control of these human remains should submit a written request with information in support of the request to Central Washington University at the address in this notice by May 10, 2013.

ADDRESSES: Lourdes Henebry-DeLeon, Department of Anthropology Central Washington University, 400 East University Way, Ellensburg, WA 98926–7544, telephone (509) 963–2167.

SUPPLEMENTARY INFORMATION: Notice is here given in accordance with the Native American Graves Protection and Repatriation Act (NAGPRA), 25 U.S.C. 3003, of the completion of an inventory of human remains under the control of Central Washington University, Ellensburg, WA. The human remains were removed from Yakima County, WA.

This notice is published as part of the National Park Service's administrative responsibilities under NAGPRA, 25 U.S.C. 3003(d)(3) and 43 CFR 10.11(d). The determinations in this notice are the sole responsibility of the museum, institution, or Federal agency that has control of the Native American human remains. The National Park Service is not responsible for the determinations in this notice.

Consultation

A detailed assessment of the human remains was made by Central Washington University professional staff in consultation with representatives of the Confederated Tribes and Bands of the Yakama Nation; Confederated Tribes of the Colville Reservation; and the Wanapum Band of Priest Rapids, a non-Federally recognized Indian group.

History and Description of the Remains

On May 5, 1957, human remains representing, at minimum, one individual were removed from site 45–YK–13 in Yakima County, WA, by Mr. and Mrs. Cyril Davis, members of the Washington Archaeological Society (WAS), a local amateur archaeology group. The human remains consist of a cranium and mandible found at the north end of site 45–YK–13. Mr. Edward Nolan donated the cranium and mandible to the Thomas Burke Memorial Washington State Museum (Burke Museum) on September 29, 1959. The collection was formally accessioned by the Burke Museum in 1965 (Burke Accn. 1965–77). In 1974, the Burke Museum legally transferred the cranium and mandible to Central Washington University Department of Anthropology (CWU ID AA). No known individuals were identified. No associated funerary objects are present.

In 1958, Dr. Robert Greengo, University of Washington, recorded 45–YK–13 as a late prehistoric to historic site during an archaeological survey in the Priest Rapids and Wanapum Reservoirs. Dr. Greengo noted that prior to his work, the WAS dug a narrow test trench perpendicular to the river bank. This test trench was never formally reported, but Dr. Greengo was informed that some human bones had been found. Subsequently, those human remains were examined by physical anthropologist Lourdes Henebry-DeLeon of Central Washington University. ''Priest Rapids'' is written on the cranium. The morphology of the remains is consistent with individuals of Native American ancestry and the archaeological site context supports the Native American determination.

The Wanapum Band of Priest Rapids, a non-Federally recognized Indian group, maintains that, according to tradition, they have always inhabited the land area where the human remains were removed. Site 45–YK–13 lies within the ceded lands of the Confederated Tribes and Bands of the Yakama Nation in the Treaty of 1855, but none of the leaders of the Wanapum Band of Priest Rapids signed that treaty. The Wanapum Band of Priest Rapids continues to live near their ancient village site at P'na (Sharkey 1984: 69). In 1951, Harry Tomalawash and Johnny Buck describe P'na as being ''upstream from the [first Priest Rapids power plant].* * * It means fish caught or fish trap. They used to catch fish there in P'na. It was a long trap made of willows. They put it into the water and it caught the fish.'' (L.V. McWorter Collection, 1951). Beyond the foot of Priest Rapids and extending to the confluence of the Snake and Columbia Rivers, Relander reports that the Wanapums ''had fifteen villages, the largest being Towmowtowee (Richland), Chanout (Hanford), and Tacht (White Bluffs).'' He further states that from Kosith (Pasco) northward to Vantage, the Wanapum occupied another ''thirty-five dwelling places'' (Relander 1956:32).

Site 45–YK–13 is located within the area identified by the Indian Claims Commission as the aboriginal territory of the Wanapum Band of Priest Rapids. A. J. Splawn was one of the best informed early settlers in central Washington, and expert witnesses for petitioners and defendants with claims before the Indian Claims Commission relied on his writings (12 Ind. Cl. Comm. 301:324–325). The Indian Claims Commission (1963:325–326) found that ''Mr. Splawn's writings concerning the areas of occupation of the various Indian tribes and bands within the claimed area substantiate and confirm much of the earlier recorded observations.'' Mr. Splawn described the areas of occupation of the Wanapum to include: ''Wi-nah-pams or Sokulks were Shahap-tam Indians and occupied both banks of the Columbia from a short distance above the mouth of the Yakima River to Saddle Mountain.'' Splawn wrote that this band belonged to the Simcoe (Yakama) reservation but refused to move onto it, preferring to die where their bones might rest in the sand hills beside their ancestors. James Mooney (1896) wrote that the Wanapum ''ranged along both banks of the Columbia from above Crab Creek down to the mouth of Snake River. The village where their chief Smohalla resided was on the west bank of the Columbia at the * * * foot of Priest's Rapids.''

At the time of the excavation and removal of these human remains, the land from which the remains were removed was not the tribal land of any Indian tribe or Native Hawaiian organization. Central Washington University consulted with all Indian tribes who are recognized as aboriginal to the area from which these Native American human remains were removed. These tribes are the Confederated Tribes and Bands of the Yakama Nation; Confederated Tribes of the Colville Reservation; and the Wanapum Band of Priest Rapids, a non-Federally recognized Indian group.

Pursuant to 43 CFR 10.11(c)(2)(ii), the Secretary of the Interior may make a recommendation for a transfer of control of culturally unidentifiable human remains with a ''tribal land'' or ''aboriginal land'' provenience to a non-Federally recognized Indian group. In

September 2012, Central Washington University requested that the Secretary, through the Native American Graves Protection and Repatriation Review Committee, recommend the proposed transfer of control of the culturally unidentifiable Native American human remains to the Wanapum Band of Priest Rapids, a non-Federally recognized Indian group. The Review Committee, acting pursuant to its responsibility under 25 U.S.C. 3006(c)(5), considered the request at its November 2012 meeting and recommended to the Secretary that the proposed transfer of control proceed. A March 1, 2013 letter on behalf of the Secretary of Interior from the Designated Federal Official transmitted the Secretary's independent review and concurrence with the Review Committee that:

- Central Washington University consulted with every appropriate Indian tribe or Native Hawaiian organization,
- none of the Indian tribes or Native Hawaiian organizations agreed to accept control,
- none of the Indian tribes or Native Hawaiian organizations objected to the proposed transfer of control, and
- Central Washington University may proceed with the agreed-upon transfer of control of the culturally unidentifiable human remains to the Wanapum Band of Priest Rapids, a non-Federally recognized Indian group.

Transfer of control is contingent on the publication of a Notice of Inventory Completion in the **Federal Register**. This notice fulfills that requirement.

Determinations Made by Central Washington University

Officials of Central Washington University have determined that:

- Pursuant to 25 U.S.C. 3001(9), the human remains described in this notice are Native American based on morphology and archeological context.
- Pursuant to 25 U.S.C. 3001(9), the human remains described in this notice represent the physical remains of one individual of Native American ancestry.
- Pursuant to 25 U.S.C. 3001(2), a relationship of shared group identity cannot be reasonably traced between the Native American human remains and any present-day Indian tribe.
- Pursuant to 43 CFR 10.11(c)(2)(ii), the disposition of the human remains will be to the Wanapum Band of Priest Rapids, a non-Federally recognized Indian group.

Additional Requestors and Disposition

Representatives of any Indian tribe or Native Hawaiian organization not identified in this notice that wish to request transfer of control of these human remains should submit a written request with information in support of the request to Lourdes Henebry-DeLeon, Department of Anthropology Central Washington University, 400 East University Way, Ellensburg, WA, 98926–7544, telephone (509) 963–2167, by May 10, 2013. After that date, if no additional requestors have come forward, transfer of control of the human remains to the Wanapum Band of Priest Rapids, a non-Federally recognized Indian group, may proceed.

Central Washington University is responsible for notifying the Confederated Tribes and Bands of the Yakama Nation; Confederated Tribes of the Colville Reservation; and the Wanapum Band of Priest Rapids, a non-Federally recognized Indian group, that this notice has been published.

Dated: March 20, 2013.

Sherry Hutt,

Manager, National NAGPRA Program.

[FR Doc. 2013–08371 Filed 4–9–13; 8:45 am]

BILLING CODE 4312–70–P

DEPARTMENT OF THE INTERIOR

National Park Service

[NPS–WASO–NAGPRA–12618; PPWOCRADN0–PCU00RP14.R50000]

Notice of Inventory Completion: San Francisco State University NAGPRA Program, San Francisco, CA

AGENCY: National Park Service, Interior.

ACTION: Notice.

SUMMARY: The San Francisco State University NAGPRA Program has completed an inventory of human remains and associated funerary objects, in consultation with the appropriate Indian tribes or Native Hawaiian organizations, and has determined that there is a cultural affiliation between the human remains and associated funerary objects and present-day Indian tribes or Native Hawaiian organizations. Lineal descendants or representatives of any Indian tribe or Native Hawaiian organization not identified in this notice that wish to request transfer of control of these human remains and associated funerary objects should submit a written request to the San Francisco State University NAGPRA Program. If no additional requestors come forward, transfer of control of the human remains and associated funerary objects to the lineal descendants, Indian tribes, or Native Hawaiian organizations stated in this notice may proceed.

DATES: Lineal descendants or representatives of any Indian tribe or Native Hawaiian organization not identified in this notice that wish to request transfer of control of these human remains and associated funerary objects should submit a written request with information in support of the request to the San Francisco State University NAGPRA Program at the address in this notice by May 10, 2013.

ADDRESSES: Jeffrey Boland Fentress, San Francisco State University NAGPRA Program, c/o Department of Anthropology, San Francisco State University, 1600 Holloway Avenue, San Francisco, CA 94132, telephone (415) 338–3075.

SUPPLEMENTARY INFORMATION: Notice is here given in accordance with the Native American Graves Protection and Repatriation Act (NAGPRA), 25 U.S.C. 3003, of the completion of an inventory of human remains and associated funerary objects under the control of the San Francisco State University NAGPRA Program. The human remains and associated funerary objects were removed from site CA–TUO–328 in Tuolumne County, CA.

This notice is published as part of the National Park Service's administrative responsibilities under NAGPRA, 25 U.S.C. 3003(d)(3). The determinations in this notice are the sole responsibility of the museum, institution, or Federal agency that has control of the Native American human remains and associated funerary objects. The National Park Service is not responsible for the determinations in this notice.

Consultation

A detailed assessment of the human remains was made by the San Francisco State University NAGPRA Program professional staff in consultation with representatives of the Tuolumne Band of Me-Wuk Indians of the Tuolumne Rancheria of California.

History and Description of the Remains

Between 1970 and 1971, human remains representing, at minimum, one individual were removed from site CA–TUO–328 in Tuolumne County, CA, by San Francisco State University personnel in conjunction with the construction of the New Don Pedro Reservoir. Site materials from the New Don Pedro Reservoir project were curated at San Francisco State University after excavation. No known individuals were identified. The 16 individual and 3 lots of associated funerary objects are 5 chert flakes and tools, 1 obsidian projectile point, 4 obsidian flakes, 1 basalt flake, 1 ground stone, 1 one bone tool, 2 square cut nails, 1 piece of haliotis shell, and 3 lots of unmodified faunal.

The age of site Ca-Tuo-328 is unknown, but the site is located within the historically documented territory of the Tuolumne Band of Me-Wuk Indians of the Tuolumne Rancheria of California. The objects are consistent with the material culture of the ancestral and contact period Sierra Miwok, who occupied this area from circa A.D. 500, at a minimum, and during the Euro-American contact period. Oral history evidence presented during consultation indicates that the area has been continuously occupied by the Miwok since the contact period and that there is cultural affiliation between the Tuolumne Band of Me-Wuk Indians of the Tuolumne Rancheria of California and the ancestral Sierra Miwok Indians.

Determinations Made by the San Francisco State University NAGPRA Program

Officials of the San Francisco State University NAGPRA Program have determined that:

- Pursuant to 25 U.S.C. 3001(9), the human remains described in this notice represent the physical remains of one individual of Native American ancestry.
- Pursuant to 25 U.S.C. 3001(3)(A), the 19 objects described in this notice are reasonably believed to have been placed with or near individual human remains at the time of death or later as part of the death rite or ceremony.
- Pursuant to 25 U.S.C. 3001(2), there is a relationship of shared group identity that can be reasonably traced between the Native American human remains and associated funerary objects and the Tuolumne Band of Me-Wuk Indians of the Tuolumne Rancheria of California.

Additional Requestors and Disposition

Lineal descendants or representatives of any Indian tribe or Native Hawaiian organization not identified in this notice that wish to request transfer of control of these human remains and associated funerary objects should submit a written request with information in support of the request to Jeffrey Boland Fentress, San Francisco State University NAGPRA Program, c/o Department of Anthropology, San Francisco State University, 1600 Holloway Avenue, San Francisco, CA 94132, telephone (415) 338–3075, by May 10, 2013. After that date, if no additional requestors have come forward, transfer of control of the human remains and associated funerary objects to the Tuolumne Band of Me-Wuk Indians of the Tuolumne Rancheria of California may proceed.

The San Francisco State University NAGPRA Program is responsible for notifying the Tuolumne Band of Me-Wuk Indians of the Tuolumne Rancheria of California that this notice has been published.

Dated: March 20, 2013.

Sherry Hutt,

Manager, National NAGPRA Program.

[FR Doc. 2013–08373 Filed 4–9–13; 8:45 am]

BILLING CODE 4312–50–P

DEPARTMENT OF THE INTERIOR

National Park Service

[NPS–WASO–NAGPRA–12550;PPWOCRADN0–PCU00RP14.R50000]

Notice of Inventory Completion: U.S. Department of the Interior, National Park Service, Grand Canyon National Park, Grand Canyon, AZ

AGENCY: National Park Service, Interior.

ACTION: Notice.

SUMMARY: The U.S. Department of the Interior, National Park Service, Grand Canyon National Park has completed an inventory of human remains and associated funerary objects, in consultation with the appropriate Indian tribes, and has determined that there is a cultural affiliation between the human remains and associated funerary objects and present-day Indian tribes. Representatives of any Indian tribe that believes itself to be culturally affiliated with the human remains and associated funerary objects may contact Grand Canyon National Park. Repatriation of the human remains and associated funerary objects to the Indian tribes stated below may occur if no additional claimants come forward.

DATES: Representatives of any Indian tribe that believes it has a cultural affiliation with the human remains and associated funerary objects should contact Grand Canyon National Park at the address below by May 10, 2013.

ADDRESSES: David Uberuaga, Superintendent, Grand Canyon National Park, P.O. Box 129, Grand Canyon, AZ 86023, telephone (928) 638–7945.

SUPPLEMENTARY INFORMATION: Notice is here given in accordance with the Native American Graves Protection and Repatriation Act (NAGPRA), 25 U.S.C. 3003, of the completion of an inventory of human remains and associated funerary objects in the possession of Grand Canyon National Park, Grand Canyon, AZ. The human remains and associated funerary objects were removed from within Grand Canyon National Park, Coconino County, AZ.

This notice is published as part of the National Park Service's administrative responsibilities under NAGPRA, 25 U.S.C. 3003(d)(3). The determinations in this notice are the sole responsibility of the Superintendent, Grand Canyon National Park.

Consultation

A detailed assessment of the human remains was made by Grand Canyon National Park professional staff in consultation with representatives of the Havasupai Tribe of the Havasupai Reservation, Arizona; Hopi Tribe of Arizona; Hualapai Indian Tribe of the Hualapai Indian Reservation, Arizona; Kaibab Band of Paiute Indians of the Kaibab Indian Reservation, Arizona; Las Vegas Tribe of Paiute Indians of the Las Vegas Indian Colony, Nevada; Moapa Band of Paiute Indians of the Moapa River Indian Reservation, Nevada; Navajo Nation, Arizona, New Mexico, & Utah; Paiute Indian Tribe of Utah (Cedar Band of Paiutes, Kanosh Band of Paiutes, Koosharem Band of Paiutes, Indian Peaks Band of Paiutes, and Shivwits Band of Paiutes) (formerly Paiute Indian Tribe of Utah (Cedar City Band of Paiutes, Kanosh Band of Paiutes, Koosharem Band of Paiutes, Indian Peaks Band of Paiutes, and Shivwits Band of Paiutes)); San Juan Southern Paiute Tribe of Arizona; White Mountain Apache Tribe of the Fort Apache Reservation, Arizona; Yavapai-Apache Nation of the Camp Verde Indian Reservation, Arizona; and Zuni Tribe of the Zuni Reservation, New Mexico (hereafter referred to as ''The Tribes'').

History and Description of the Remains

In 1970, human remains representing a minimum of two individuals were removed from the Bright Angel site in Coconino County, AZ, during legally authorized excavations under the direction of Douglas W. Schwartz on behalf of the School of American Research. No known individuals were identified. The human remains were curated at Arizona State University until 2008, when they were returned to Grand Canyon National Park. No associated funerary objects are present.

In 1977, human remains representing a minimum of one individual were removed from AZ B:16:85 in Coconino County, AZ, during legally authorized excavations by former Grand Canyon anthropologist Robert C. Euler. The human remains and associated funerary objects were curated by the University of Arizona, Tucson, AZ until 1986, when they were transferred to Grand Canyon National Park. No known individuals were identified. The 12 associated funerary objects are 1 bag of yucca cordage, 1 vegetal fiber cordage net, 1 bag of juniper bark, 5 basketry

fragments, 1 fragment of a Deadman's Black-on-red ceramic bowl, and 3 Tusayan Gray Ware sherds.

AZ B:16:85 is a rock crevice likely associated with the nearby Bright Angel site, dated between A.D. 1050 and 1140.

In 1982, human remains representing a minimum of one individual were removed from the Bright Angel site in Coconino County, AZ, during legally authorized excavations by former Grand Canyon anthropologist Robert C. Euler. No known individuals were identified. Some of the human remains were first held at the School of American Research, transferred to the National Park Service's Western Archeological and Conservation Center in Tucson, AZ, in 1989, and then transferred to Grand Canyon National Park in 2006. The rest have been held at Grand Canyon National Park since excavation. The funerary objects were transferred from Robert C. Euler to Grand Canyon National Park in 1986. The 13 associated funerary objects are 1 Tusayan corrugated ceramic jar, 1 incomplete olivella shell bead, and 11 stone beads.

Site architecture, ceramic typology, cross-dating, and tools indicate that the site was occupied by ancestral Puebloan peoples between A.D. 1050 and 1140.

Architectural similarities, material culture, geography, and oral histories indicate close cultural and historical ties between the ancestral Puebloan peoples and the Hopi Tribe of Arizona and Zuni Tribe of the Zuni Indian Reservation, New Mexico.

Determinations Made by Grand Canyon National Park

Officials of Grand Canyon National Park have determined that:

- Pursuant to 25 U.S.C. 3001(9), the human remains described in this notice represent the physical remains of four individuals of Native American ancestry.
- Pursuant to 25 U.S.C. 3001(3)(A), the 25 objects described above are reasonably believed to have been placed with or near individual human remains at the time of death or later as part of the death rite or ceremony.
- Pursuant to 25 U.S.C. 3001(2), there is a relationship of shared group identity that can be reasonably traced between the Native American human remains and associated funerary objects and the Hopi Tribe of Arizona and Zuni Tribe of the Zuni Reservation, New Mexico.

Additional Requestors and Disposition

Representatives of any Indian tribe that believes itself to be culturally affiliated with the human remains and associated funerary objects should contact David Uberuaga, Superintendent, Grand Canyon National Park, P.O. Box 129, Grand Canyon, AZ 86023, telephone (928) 638–7945, before May 10, 2013. Repatriation of the human remains and associated funerary objects to the Hopi Tribe of Arizona and Zuni Tribe of the Zuni Reservation, New Mexico may proceed after that date if no additional claimants come forward.

Grand Canyon National Park is responsible for notifying The Tribes that this notice has been published.

Dated: March 11, 2013.

Sherry Hutt,

Manager, National NAGPRA Program.

[FR Doc. 2013–08378 Filed 4–9–13; 8:45 am]

BILLING CODE 4312–50–P

DEPARTMENT OF THE INTERIOR

National Park Service

[NPS–WASO–NAGPRA–12548; PPWOCRADN0–PCU00RP14.R50000]

Notice of Inventory Completion: U.S. Department of the Interior, National Park Service, Grand Canyon National Park, Grand Canyon, AZ

AGENCY: National Park Service, Interior.

ACTION: Notice.

SUMMARY: The U.S. Department of the Interior, National Park Service, Grand Canyon National Park has completed an inventory of human remains and associated funerary objects, in consultation with the appropriate Indian tribes, and has determined that there is a cultural affiliation between the human remains and associated funerary objects and present-day Indian tribes. Representatives of any Indian tribe that believes itself to be culturally affiliated with the human remains and associated funerary objects may contact Grand Canyon National Park. Repatriation of the human remains and associated funerary objects to the Indian tribes stated below may occur if no additional claimants come forward.

DATES: Representatives of any Indian tribe that believes it has a cultural affiliation with the human remains and associated funerary objects should contact Grand Canyon National Park at the address below by May 10, 2013.

ADDRESSES: David Uberuaga, Superintendent, Grand Canyon National Park, P.O. Box 129, Grand Canyon, AZ 86023, telephone (928) 638–7945.

SUPPLEMENTARY INFORMATION: Notice is here given in accordance with the Native American Graves Protection and Repatriation Act (NAGPRA), 25 U.S.C. 3003, of the completion of an inventory of human remains and associated funerary objects in the possession of Grand Canyon National Park, Grand Canyon, AZ. The human remains and associated funerary objects were removed from within Grand Canyon National Park, Coconino County, AZ.

This notice is published as part of the National Park Service's administrative responsibilities under NAGPRA, 25 U.S.C. 3003(d)(3). The determinations in this notice are the sole responsibility of the Superintendent, Grand Canyon National Park.

Consultation

A detailed assessment of the human remains was made by Grand Canyon National Park professional staff in consultation with representatives of the Havasupai Tribe of the Havasupai Reservation, Arizona; Hopi Tribe of Arizona; Hualapai Indian Tribe of the Hualapai Indian Reservation, Arizona; Kaibab Band of Paiute Indians of the Kaibab Indian Reservation, Arizona; Las Vegas Tribe of Paiute Indians of the Las Vegas Indian Colony, Nevada; Moapa Band of Paiute Indians of the Moapa River Indian Reservation, Nevada; Navajo Nation, Arizona, New Mexico, & Utah; Paiute Indian Tribe of Utah (Cedar Band of Paiutes, Kanosh Band of Paiutes, Koosharem Band of Paiutes, Indian Peaks Band of Paiutes, and Shivwits Band of Paiutes) (formerly Paiute Indian Tribe of Utah (Cedar City Band of Paiutes, Kanosh Band of Paiutes, Koosharem Band of Paiutes, Indian Peaks Band of Paiutes, and Shivwits Band of Paiutes)); San Juan Southern Paiute Tribe of Arizona; White Mountain Apache Tribe of the Fort Apache Reservation, Arizona; Yavapai-Apache Nation of the Camp Verde Indian Reservation, Arizona; and Zuni Tribe of the Zuni Reservation, New Mexico (hereafter referred to as ''The Tribes'').

History and Description of the Remains

In 1969, human remains representing a minimum of one individual were removed from site AZ B:16:103 in Coconino County, AZ, during legally authorized excavations by Robert Cornelius. No known individuals were identified. The two associated funerary objects are one Deadman's Black-on-red ceramic bowl and one Dogozshi Black-on-white ceramic canteen.

Site architecture and associated funerary objects indicate that the site was occupied by ancestral Puebloan peoples, and the human remains were buried between A.D. 1050 and 1150.

In 1969–1970, human remains representing a minimum of four

individuals were removed from Walhalla Ruin in Coconino County, AZ, during legally authorized excavations by the School of American Research under the direction of Douglas W. Schwartz. The human remains and associated funerary objects were first stored at the School of American Research, transferred to the National Park Service's Western Archeological and Conservation Center in Tucson, AZ, in 1989, and then transferred to Grand Canyon National Park in 2006. No known individuals were identified. The 103 associated funerary objects are 1 Walhalla Black-on-white bowl; 2 Tusayan Black-on-red jars; 1 Citadel Polychrome bowl; 1 Tusayan White Ware jar with handle; 1 Shinarump corrugated jar; 2 cores; 48 flakes; 1 projectile point; 1 bead bracelet; 4 Middleton Polychrome sherds; 2 Flagstaff Black-on-white bowls; 1 Virgin Black-on-white jar with two handles; 1 Tusayan corrugated pitcher; 1 Sosi Black-on-white pitcher; 1 Dogoszhi Black-on-white pitcher; 1 Holbrook Black-on-white bowl; 2 Walhalla corrugated jars, each with one handle; 1 Walnut Black-on-white seed jar; 1 Walnut Black-on-white bowl; 2 fragments of a rectangular stone ornament; 26 sherds; 1 bag of fragmentary mammal bones; and 1 mano.

Walhalla Ruin is part of a larger complex of hundreds of sites located on the North Rim of the Grand Canyon. Site architecture, cross-dating, ceramic typology, dendrochronology, and tools found at the site indicate that Walhalla Ruin was occupied by ancestral Puebloan peoples between A.D. 1050 and 1150.

In 1969–1970, human remains representing a minimum of one individual were removed from GC 671 in Coconino County, AZ, during legally authorized excavations conducted by Southern Utah University under the direction of Richard A. Thompson. The human remains were curated at Southern Utah University until 1996, when they were transferred to Grand Canyon National Park. No known individuals were identified. The three associated funerary objects are one worked and drilled bowl fragment (Sosi black-on-white), one plain gray jar, and one mano fragment.

Site architecture, ceramics, and flaked stone tools indicate that the site was occupied by ancestral Puebloan peoples between A.D. 1000 and 1300.

In 1976–1977, human remains representing a minimum of six individuals were removed from GC 663 in Coconino County, AZ, during legally authorized excavations by the Southern Utah University Archeological Field School under the direction of Richard A. Thompson. The human remains were curated at Southern Utah University until 1996, when they were transferred to Grand Canyon National Park. No known individuals were identified. The three associated funerary objects are one partial small ceramic jar, one ceramic sherd, and one ceramic bowl fragment with rim.

Site architecture and associated funerary objects suggest that GC 663 was occupied by ancestral Puebloan peoples between A.D. 400 and 1300.

In 1977, human remains representing a minimum of one individual were removed from AZ C:13:85 in Coconino County, AZ, during legally authorized excavations by former Grand Canyon anthropologist Robert C. Euler. No known individuals were identified. The three associated funerary objects are one Tusayan Black-on-red ceramic seed jar, one Black-on-white ceramic bowl fragment, and one Tusayan corrugated wide-mouth ceramic jar.

The associated funerary objects indicate that this individual was buried between A.D. 1050 and 1150.

Architectural similarities, material culture, geography, and oral histories indicate close cultural and historical ties between the ancestral Puebloan peoples and the Hopi Tribe of Arizona and Zuni Tribe of the Zuni Indian Reservation, New Mexico.

Archeological assemblages, geography, place names, and oral history indicate cultural and historical ties between the inhabitants of these sites and several of the Southern Paiute tribes (Kaibab Band of Paiute Indians, Las Vegas Tribe of Paiute Indians, Moapa Band of Paiute Indians, and Shivwits Band of Paiutes).

Determinations Made by Grand Canyon National Park

Officials of Grand Canyon National Park have determined that:

- Pursuant to 25 U.S.C. 3001(9), the human remains described in this notice represent the physical remains of 13 individuals of Native American ancestry.
- Pursuant to 25 U.S.C. 3001(3)(A), the 114 objects described above are reasonably believed to have been placed with or near individual human remains at the time of death or later as part of the death rite or ceremony.
- Pursuant to 25 U.S.C. 3001(2), there is a relationship of shared group identity that can be reasonably traced between the Native American human remains and associated funerary objects and the Hopi Tribe of Arizona; Kaibab Band of Paiute Indians of the Kaibab Indian Reservation, Arizona; Las Vegas Tribe of Paiute Indians of the Las Vegas Indian Colony, Nevada; Moapa Band of Paiute Indians of the Moapa River Indian Reservation, Nevada; Paiute Indian Tribe of Utah (Cedar Band of Paiutes, Kanosh Band of Paiutes, Koosharem Band of Paiutes, Indian Peaks Band of Paiutes, and Shivwits Band of Paiutes) (formerly Paiute Indian Tribe of Utah (Cedar City Band of Paiutes, Kanosh Band of Paiutes, Koosharem Band of Paiutes, Indian Peaks Band of Paiutes, and Shivwits Band of Paiutes)); and Zuni Tribe of the Zuni Reservation, New Mexico.

Additional Requestors and Disposition

Representatives of any Indian tribe that believes itself to be culturally affiliated with the human remains and associated funerary objects should contact David Uberuaga, Superintendent, Grand Canyon National Park, P.O. Box 129, Grand Canyon, AZ 86023, telephone (928) 638–7945, before May 10, 2013. Repatriation of the human remains and associated funerary objects to the Hopi Tribe of Arizona; Kaibab Band of Paiute Indians of the Kaibab Indian Reservation, Arizona; Las Vegas Tribe of Paiute Indians of the Las Vegas Indian Colony, Nevada; Moapa Band of Paiute Indians of the Moapa River Indian Reservation, Nevada; Paiute Indian Tribe of Utah (Cedar Band of Paiutes, Kanosh Band of Paiutes, Koosharem Band of Paiutes, Indian Peaks Band of Paiutes, and Shivwits Band of Paiutes) (formerly Paiute Indian Tribe of Utah (Cedar City Band of Paiutes, Kanosh Band of Paiutes, Koosharem Band of Paiutes, Indian Peaks Band of Paiutes, and Shivwits Band of Paiutes)); and Zuni Tribe of the Zuni Reservation, New Mexico may proceed after that date if no additional claimants come forward.

Grand Canyon National Park is responsible for notifying The Tribes that this notice has been published.

Dated: March 11, 2013.

Sherry Hutt,

Manager, National NAGPRA Program.

[FR Doc. 2013–08381 Filed 4–9–13; 8:45 am]

BILLING CODE 4310–50–P

DEPARTMENT OF THE INTERIOR

National Park Service

[NPS–WASO–NAGPRA–12547; PPWOCRADN0–PCU00RP14.R50000]

Notice of Inventory Completion: U.S. Department of the Interior, National Park Service, Grand Canyon National Park, Grand Canyon, AZ

AGENCY: National Park Service, Interior.

ACTION: Notice.

SUMMARY: The U.S. Department of the Interior, National Park Service, Grand Canyon National Park has completed an inventory of human remains and associated funerary objects, in consultation with the appropriate Indian tribes, and has determined that there is a cultural affiliation between the human remains and associated funerary objects and present-day Indian tribes. Representatives of any Indian tribe that believes itself to be culturally affiliated with the human remains and associated funerary objects may contact Grand Canyon National Park. Repatriation of the human remains and associated funerary objects to the Indian tribes stated below may occur if no additional claimants come forward.

DATES: Representatives of any Indian tribe that believes it has a cultural affiliation with the human remains and associated funerary objects should contact Grand Canyon National Park at the address below by May 10, 2013.

ADDRESSES: David Uberuaga, Superintendent, Grand Canyon National Park, P.O. Box 129, Grand Canyon, AZ 86023, telephone (928) 638–7945.

SUPPLEMENTARY INFORMATION: Notice is here given in accordance with the Native American Graves Protection and Repatriation Act (NAGPRA), 25 U.S.C. 3003, of the completion of an inventory of human remains and associated funerary objects in the possession of Grand Canyon National Park, Grand Canyon, AZ. The human remains and associated funerary objects were removed from Muav Cave, Mohave County, AZ.

This notice is published as part of the National Park Service's administrative responsibilities under NAGPRA, 25 U.S.C. 3003(d)(3). The determinations in this notice are the sole responsibility of the Superintendent, Grand Canyon National Park.

Consultation

A detailed assessment of the human remains was made by Grand Canyon National Park professional staff in consultation with representatives of the Havasupai Tribe of the Havasupai Reservation, Arizona; Hopi Tribe of Arizona; Hualapai Indian Tribe of the Hualapai Indian Reservation, Arizona; Kaibab Band of Paiute Indians of the Kaibab Indian Reservation, Arizona; Las Vegas Tribe of Paiute Indians of the Las Vegas Indian Colony, Nevada; Moapa Band of Paiute Indians of the Moapa River Indian Reservation, Nevada; Navajo Nation, Arizona, New Mexico, & Utah; Paiute Indian Tribe of Utah (Cedar Band of Paiutes, Kanosh Band of Paiutes, Koosharem Band of Paiutes, Indian Peaks Band of Paiutes, and Shivwits Band of Paiutes) (formerly Paiute Indian Tribe of Utah (Cedar City Band of Paiutes, Kanosh Band of Paiutes, Koosharem Band of Paiutes, Indian Peaks Band of Paiutes, and Shivwits Band of Paiutes)); San Juan Southern Paiute Tribe of Arizona; White Mountain Apache Tribe of the Fort Apache Reservation, Arizona; Yavapai-Apache Nation of the Camp Verde Indian Reservation, Arizona; and Zuni Tribe of the Zuni Reservation, New Mexico (hereafter referred to as ''The Tribes'').

History and Description of the Remains

In 1936, human remains representing a minimum of one individual were removed from the Muav Cave site in Mohave County, AZ, during legally authorized excavations by National Park Service archeologists under the direction of Willis Evans. The human remains and associated funerary objects were stored at the National Park Service's Western Archeological and Conservation Center in Tucson, AZ, until 2002, when they were transferred to Grand Canyon National Park. No known individuals were identified. The associated funerary objects are 70 burned olivella shell beads and olivella shell bead fragments.

The Muav Cave site is not well-dated. However, ceramics, unfired pottery, yucca chews, yucca fiber, animal bones, and chipped stone tools indicate occupation sometime after A.D. 1300.

The artifacts found at Muav Cave are consistent with materials identified by archeologists as associated with the Cerbat culture. Considered the ancestors of the Pai people, the Cerbat are believed to have migrated to the Grand Canyon around the 1300s. Their descendants, two Pai groups who eventually divided into what are now known as the Hualapai and Havasupai tribes, remained in the region. Aquarius brownware and Lower Colorado buffware ceramics, locally procured lithic tools, geography, and the known protohistoric occupation of the area by the Cerbat people, indicate historical ties between inhabitants of Muav Cave and the Havasupai Tribe of the Havasupai Reservation, Arizona, and the Hualapai Indian Tribe of the Hualapai Indian Reservation, Arizona.

Geography, place names, and oral history indicate historical ties between the inhabitants of Muav Cave and several of the Southern Paiute tribes (Kaibab Band of Paiute Indians, Las Vegas Tribe of Paiute Indians, Moapa Band of Paiute Indians, and Shivwits Band of Paiutes).

Determinations Made by Grand Canyon National Park

Officials of Grand Canyon National Park have determined that:

- Pursuant to 25 U.S.C. 3001(9), the human remains described in this notice represent the physical remains of one individual of Native American ancestry.
- Pursuant to 25 U.S.C. 3001(3)(A), the 70 objects described above are reasonably believed to have been placed with or near individual human remains at the time of death or later as part of the death rite or ceremony.
- Pursuant to 25 U.S.C. 3001(2), there is a relationship of shared group identity that can be reasonably traced between the Native American human remains and associated funerary objects and the Havasupai Tribe of the Havasupai Reservation, Arizona; Hualapai Indian Tribe of the Hualapai Indian Reservation, Arizona; Kaibab Band of Paiute Indians of the Kaibab Indian Reservation, Arizona; Las Vegas Tribe of Paiute Indians of the Las Vegas Indian Colony, Nevada; Moapa Band of Paiute Indians of the Moapa River Indian Reservation, Nevada; and Paiute Indian Tribe of Utah (Cedar Band of Paiutes, Kanosh Band of Paiutes, Koosharem Band of Paiutes, Indian Peaks Band of Paiutes, and Shivwits Band of Paiutes) (formerly Paiute Indian Tribe of Utah (Cedar City Band of Paiutes, Kanosh Band of Paiutes, Koosharem Band of Paiutes, Indian Peaks Band of Paiutes, and Shivwits Band of Paiutes)).

Additional Requestors and Disposition

Representatives of any Indian tribe that believes itself to be culturally affiliated with the human remains and associated funerary objects should contact David Uberuaga, Superintendent, Grand Canyon National Park, P.O. Box 129, Grand Canyon, AZ 86023, telephone (928) 638–7945, before May 10, 2013. Repatriation of the human remains and associated funerary objects to the Havasupai Tribe of the Havasupai Reservation, Arizona; Hualapai Indian Tribe of the Hualapai Indian Reservation, Arizona; Kaibab

Band of Paiute Indians of the Kaibab Indian Reservation, Arizona; Las Vegas Tribe of Paiute Indians of the Las Vegas Indian Colony, Nevada; Moapa Band of Paiute Indians of the Moapa River Indian Reservation, Nevada; and Paiute Indian Tribe of Utah (Cedar Band of Paiutes, Kanosh Band of Paiutes, Koosharem Band of Paiutes, Indian Peaks Band of Paiutes, and Shivwits Band of Paiutes) (formerly Paiute Indian Tribe of Utah (Cedar City Band of Paiutes, Kanosh Band of Paiutes, Koosharem Band of Paiutes, Indian Peaks Band of Paiutes, and Shivwits Band of Paiutes)) may proceed after that date if no additional claimants come forward.

Grand Canyon National Park is responsible for notifying The Tribes that this notice has been published.

Dated: March 11, 2013.

Sherry Hutt,

Manager, National NAGPRA Program.

[FR Doc. 2013–08382 Filed 4–9–13; 8:45 am]

BILLING CODE 4312–50–P

DEPARTMENT OF THE INTERIOR

National Park Service

[NPS–WASO–NAGPRA–12561;

PPWOCRADN0–PCU00RP14.R50000]

Notice of Inventory Completion: U.S. Department of the Interior, Bureau of Indian Affairs, Washington, DC, and the University of Denver Department of Anthropology and Museum of Anthropology, Denver, CO

AGENCY: National Park Service, Interior.

ACTION: Notice.

SUMMARY: The U.S. Department of the Interior, Bureau of Indian Affairs, and the University of Denver Department of Anthropology and Museum of Anthropology, have completed an inventory of human remains and associated funerary objects, in consultation with the appropriate Indian tribes or Native Hawaiian organizations, and have determined that there is a cultural affiliation between the human remains and associated funerary objects and present-day Indian tribes or Native Hawaiian organizations. Lineal descendants or representatives of any Indian tribe or Native Hawaiian organization not identified in this notice that wish to request transfer of control of these human remains and associated funerary objects should submit a written request to the U.S. Department of the Interior, Bureau of Indian Affairs. If no additional requestors come forward, transfer of control of the human remains and associated funerary objects to the lineal descendants, Indian tribes, or Native Hawaiian organizations stated in this notice may proceed.

DATES: Lineal descendants or representatives of any Indian tribe or Native Hawaiian organization not identified in this notice that wish to request transfer of control of these human remains and associated funerary objects should submit a written request with information in support of the request to the U.S. Department of the Interior, Bureau of Indian Affairs at the address in this notice by May 10, 2013.

ADDRESSES: Anna Pardo, Museum Program Manager/NAGPRA Coordinator, U.S. Department of the Interior, Indian Affairs, 12220 Sunrise Valley Drive, Room 6084, Reston, VA 20191, telephone (703) 390–6343, email *Anna.Pardo@bia.gov.*

SUPPLEMENTARY INFORMATION: Notice is here given in accordance with the Native American Graves Protection and Repatriation Act (NAGPRA), 25 U.S.C. 3003, of the completion of an inventory of human remains and associated funerary objects under the control of the U.S. Department of the Interior, Bureau of Indian Affairs, Washington, DC, and in the physical custody of University of Denver Department of Anthropology and Museum of Anthropology. The human remains and associated funerary objects were removed from a site located south from the town of Bluff, in San Juan County, UT, and on the Navajo Indian Reservation.

This notice is published as part of the National Park Service's administrative responsibilities under NAGPRA, 25 U.S.C. 3003(d)(3). The determinations in this notice are the sole responsibility of the museum, institution, or Federal agency that has control of the Native American human remains and associated funerary objects. The National Park Service is not responsible for the determinations in this notice.

Consultation

A detailed assessment of the human remains was made by the University of Denver Department of Anthropology and Museum of Anthropology professional staff in consultation with representatives of Jicarilla Apache Nation, New Mexico; Navajo Nation, Arizona, New Mexico & Utah; Ohkay Owingeh, New Mexico (previously listed as the Pueblo of San Juan); Pueblo of Acoma, New Mexico; Pueblo of Cochiti, New Mexico; Pueblo of Isleta, New Mexico; Pueblo of Jemez, New Mexico; Pueblo of Laguna, New Mexico; Pueblo of Nambe, New Mexico; Pueblo of Pojoaque, New Mexico; Pueblo of Sandia, New Mexico; Pueblo of Santa Ana, New Mexico; Pueblo of Santa Clara, New Mexico; Pueblo of Taos, New Mexico; Pueblo of Tesuque, New Mexico; Pueblo of Zia, New Mexico; Southern Ute Indian Tribe of the Southern Ute Reservation, Colorado; Ute Mountain Tribe of the Ute Mountain Reservation, Colorado, New Mexico & Utah; and the Zuni Tribe of the Zuni Reservation, New Mexico. The following tribes were invited to consult and were sent copies of the cultural affiliation findings for comment: Hopi Tribe of Arizona; Kewa Pueblo, New Mexico (previously listed as the Pueblo of Santo Domingo); Pueblo of Picuris, New Mexico; Pueblo of San Felipe, New Mexico; Pueblo of San Ildefonso, New Mexico; Skull Valley Band of Goshute Indians of Utah; Ute Indian Tribe of the Uintah & Ouray Reservation, Utah; and Ysleta Del Sur Pueblo of Texas.

History and Description of the Remains

In June 1978, human remains representing, at minimum, one individual were removed from a site referenced in documentation as UT W:10:2, located south of the town of Bluff, in San Juan County, UT, by Mimi Kiser, a University of Denver student, who donated the remains to the University's Museum of Anthropology in December 1978. No known individuals were identified. The 47 associated funerary objects are one non-human tooth; one piece of fabric, woven cotton; one grass seed head; three pieces of knotted cordage with what appears to be feathers; nine cordage fragments; 24 knotted fibers; four hoops of fiber; one lot of knotted fiber; and three unidentified organic items.

Prior to the beginning of a University of Denver archeology field school project at Butler Wash, Ms. Kiser hiked south of Bluff, UT, crossing the San Juan River, and came upon a room block, a kiva, and a pithouse located on one side of a crevice overlooked by a cliff. The architecture is described as being nestled against the indented cliff, providing sufficient protection. The burial was found less than one foot below the ground surface in sedimentary sand. The burial was found in a flexed position. Corn, knots, and twine were buried with the human remains, though no ceramics were found. The presence of twine and cord, a sandal, and corn along with the absence of ceramics would suggest a late Basketmaker or early Pueblo assemblage. There is a well-documented cultural affiliation between these groups and the modern-day Pueblo tribes. Migration stories and oral histories specify the Four Corners area as being

highly significant to the ancestors of the Pueblos. Review of the field records and maps associated with the excavation of the site, and review of the land ownership records of the areas south of Bluff, indicate that the site is on the Navajo Indian Reservation.

Based on the preponderance of evidence, including archeology, architecture, material culture, oral traditions, and expert opinion, officials of the Bureau of Indian Affairs have reasonably determined that the Native American human remains are ancestral Puebloan. Descendants of ancestral Puebloan culture are members of the present-day tribes of the Hopi Tribe of Arizona; Kewa Pueblo, New Mexico (previously listed as the Pueblo of Santo Domingo); Ohkay Owingeh, New Mexico (previously listed as the Pueblo of San Juan); Pueblo of Acoma, New Mexico; Pueblo of Cochiti, New Mexico; Pueblo of Isleta, New Mexico; Pueblo of Jemez, New Mexico; Pueblo of Laguna, New Mexico; Pueblo of Nambe, New Mexico; Pueblo of Picuris, New Mexico; Pueblo of Pojoaque, New Mexico; Pueblo of San Felipe, New Mexico; Pueblo of San Ildefonso, New Mexico; Pueblo of Sandia, New Mexico; Pueblo of Santa Ana, New Mexico; Pueblo of Santa Clara, New Mexico; Pueblo of Taos, New Mexico; Pueblo of Tesuque, New Mexico; Pueblo of Zia, New Mexico; Ysleta Del Sur Pueblo of Texas; and Zuni Tribe of the Zuni Reservation, New Mexico (hereafter referred to as ''The Tribes'').

Determinations Made by the U.S. Department of the Interior, Bureau of Indian Affairs, Washington, DC, and the University of Denver Department of Anthropology and Museum of Anthropology

Officials of the Bureau of Indian Affairs and the University of Denver Department of Anthropology and Museum of Anthropology have determined that:

- Pursuant to 25 U.S.C. 3001(9), the human remains described in this notice represent the physical remains of one individual of Native American ancestry.
- Pursuant to 25 U.S.C. 3001(3)(A), the 47 objects described above are reasonably believed to have been placed with or near individual human remains at the time of death or later as part of the death rite or ceremony.
- Pursuant to 25 U.S.C. 3001(2), there is a relationship of shared group identity that can be reasonably traced between the Native American human remains and associated funerary objects and The Tribes.

Additional Requestors and Disposition

Lineal descendants or representatives of any Indian tribe or Native Hawaiian organization not identified in this notice that wish to request transfer of control of these human remains and associated funerary objects should submit a written request with information in support of the request to Anna Pardo, Museum Program Manager/NAGPRA Coordinator, U.S. Department of the Interior, Indian Affairs, 12220 Sunrise Valley Drive, Room 6084, Reston, VA 20191, telephone (703) 390–6343, email *Anna.Pardo@bia.gov,* by May 10, 2013. After that date, if no additional requestors have come forward, transfer of control of the human remains and associated funerary objects to The Tribes may proceed after that date if no additional claimants come forward.

The Bureau of Indian Affairs is responsible for notifying The Tribes that this notice has been published.

Dated: March 13, 2013.

Sherry Hutt,

Manager, National NAGPRA Program.

[FR Doc. 2013–08379 Filed 4–9–13; 8:45 am]

BILLING CODE 4312–50–P

DEPARTMENT OF THE INTERIOR

National Park Service

[NPS–WASO–NAGPRA–12585; PPWOCRADN0–PCU00RP14.R50000]

Notice of Inventory Completion: Michigan Department of Transportation, Van Wagoner Building, Lansing, MI

AGENCY: National Park Service, Interior.

ACTION: Notice.

SUMMARY: The Michigan Department of Transportation has completed an inventory of human remains and associated funerary objects, in consultation with the appropriate Indian tribes, and has determined that there is a cultural affiliation between the human remains and associated funerary objects and a present-day Indian tribe. Representatives of any Indian tribe that believes itself to be culturally affiliated with the human remains and associated funerary objects may contact the Michigan Department of Transportation. Repatriation of the human remains and associated funerary objects to the Indian tribe stated below may occur if no additional claimants come forward.

DATES: Representatives of any Indian tribe that believes it has a cultural affiliation with the human remains and associated funerary objects should contact the Michigan Department of Transportation at the address below by May 10, 2013.

ADDRESSES: James A. Robertson, Staff Archaeologist, Environmental Section, Bureau of Highway Development, Michigan Department of Transportation, 425 West Ottawa, P.O. Box 30150, Lansing, MI 48909, telephone (517) 335–2637.

SUPPLEMENTARY INFORMATION: Notice is here given in accordance with the Native American Graves Protection and Repatriation Act (NAGPRA), 25 U.S.C. 3003, of the completion of an inventory of human remains and associated funerary objects in the possession of the Michigan Department of Transportation (MDOT). The human remains and associated funerary objects were removed from Iosco County, MI.

This notice is published as part of the National Park Service's administrative responsibilities under NAGPRA, 25 U.S.C. 3003(d)(3). The determinations in this notice are the sole responsibility of the museum, institution, or Federal agency that has control of the Native American human remains and associated funerary objects. The National Park Service is not responsible for the determinations in this notice.

Consultation

A detailed assessment of the human remains was made by the Michigan Department of Transportation professional staff in consultation with representatives of the Bad River Band of the Lake Superior Tribe of Chippewa Indians of the Bad River Reservation, Wisconsin; Bay Mills Indian Community, Michigan; Chippewa-Cree Indians of the Rocky Boy's Reservation, Montana; Grand Traverse Band of Ottawa and Chippewa Indians, Michigan; Keweenaw Bay Indian Community, Michigan; Lac Courte Oreilles Band of Lake Superior Chippewa Indians of Wisconsin; Lac du Flambeau Band of Lake Superior Chippewa Indians of the Lac du Flambeau Reservation of Wisconsin; Lac Vieux Desert Band of Lake Superior Chippewa Indians, Michigan; Minnesota Chippewa Tribe, Minnesota (Six component reservations: Bois Forte Band (Nett Lake); Fond du Lac Band; Grand Portage Band; Leech Lake Band; Mille Lacs Band; White Earth Band); Red Cliff Band of Lake Superior Chippewa Indians of Wisconsin; Red Lake Band of Chippewa Indians, Minnesota; Saginaw Chippewa Indian Tribe of Michigan; Sault Ste. Marie Tribe of Chippewa Indians of Michigan; Sokaogon Chippewa Community, Wisconsin; St. Croix Chippewa Indians of Wisconsin; and the Turtle Mountain

Band of Chippewa Indians of North Dakota.

MDOT also met with the Michigan Anishinaabek Cultural Protection and Repatriation Alliance (MACPRA). MACPRA approved a motion to support the Saginaw Chippewa Indian Tribe of Michigan's request for repatriation of the human remains and associated funerary objects. MDOT also received a letter from the Tribal Historic Preservation Officer of the Leech Lake Band supporting the Saginaw Chippewa Indian Tribe of Michigan's request.

History and Description of the Remains

In May 2012, human remains representing, at minimum, nine individuals were removed by MDOT from site 20IS299 in Oscoda Township, Iosco County, MI. No known individuals were identified. The 202 associated funerary objects include 1 brass kettle lid, 1 trade axe with wood handle fragment, 38 earbobs and earbob fragments, 9 brooches and brooch fragments, 10 arm/wrist band fragments, 1 metal jewelry setting, 1 nail embedded in wood, 130 trade beads, 1 faceted glass ornament, 6 white clay pipe fragments, and 4 fragments of woven fabric that were associated with a metal brooch.

Based on the archaeological evidence, MDOT archaeological staff and archaeological consultant concluded that the human remains were of Native American ancestry and that the human remains and associated funerary objects date to the 1820s and 1850s. At the request of MDOT, the Michigan State University Forensic Anthropology Laboratory (MSUFAL) conducted non-invasive analysis of the human remains. The MSUFAL confirmed that the physical anthropological evidence corroborated the MDOT assessment. The Saginaw Chippewa Indian Tribe of Michigan also provided MDOT historical evidence documenting their presence during the 1820s to 1850s in the location where the human remains and associated funerary objects were removed.

Determinations Made by the Michigan Department of Transportation

Officials of the Michigan Department of Transportation have determined that:

- Pursuant to 25 U.S.C. 3001(9), the human remains described in this notice represent the physical remains of nine individuals of Native American ancestry.
- Pursuant to 25 U.S.C. 3001(3)(A), the 202 objects described above are reasonably believed to have been placed with or near individual human remains at the time of death or later as part of the death rite or ceremony.
- Pursuant to 25 U.S.C. 3001(2), there is a relationship of shared group identity that can be reasonably traced between the Native American human remains and associated funerary objects and the Saginaw Chippewa Indian Tribe of Michigan.

Additional Requestors and Disposition

Representatives of any Indian tribe that believes itself to be culturally affiliated with the human remains and associated funerary objects should contact James A. Robertson, Staff Archaeologist, Environmental Section, Bureau of Highway Development, Michigan Department of Transportation, 425 West Ottawa, P.O. Box 30150, Lansing, MI 48909, telephone (517) 335–2637 before May 10, 2013. Repatriation of the human remains and associated funerary objects to the Saginaw Chippewa Indian Tribe of Michigan may proceed after that date if no additional claimants come forward.

The Michigan Department of Transportation is responsible for notifying the Saginaw Chippewa Indian Tribe of Michigan that this notice has been published.

Dated: March 15, 2013.

Sherry Hutt,

Manager, National NAGPRA Program.

[FR Doc. 2013–08380 Filed 4–9–13; 8:45 am]

BILLING CODE 4312–50–P

DEPARTMENT OF THE INTERIOR

National Park Service

[NPS–WASO–NAGPRA–12615; PPWOCRADN0–PCU00RP14.R50000]

Native American Graves Protection and Repatriation Review Committee: Meetings

AGENCY: National Park Service, Interior.

ACTION: Notice.

SUMMARY: Notice is hereby given in accordance with the Federal Advisory Committee Act, 5 U.S.C. Appendix (1988), of two meetings of the Native American Graves Protection and Repatriation Review Committee (Review Committee). The Review Committee will meet on November 6–7, 2013, in Mount Pleasant, MI, and on December 5, 2013, from 2 p.m. until approximately 4 p.m. EST via teleconference. Both meetings will be open to the public.

DATES: The Review Committee will meet on November 6–7, 2013, and December 5, 2013, if necessary. Public comment requests must be received by September 20, 2013. Requests for CUI disposition must be received by August 30, 2013. Requests for findings of fact must be received by August 16, 2013. Requests to convene parties and facilitate the resolution of a dispute must be received by July 12, 2013. All submission dates apply to the November meeting.

ADDRESSES: The Review Committee will meet in the Ziibiwing Center of Anishinabe Culture and Lifeways, 6650 East Broadway, Mount Pleasant, MI 48858, on November 6–7, 2013. Electronic submissions are to be sent to *Sherry_Hutt@nps.gov.* Mailed submissions are to be sent to Designated Federal Officer, NAGPRA Review Committee, National Park Service, National NAGPRA Program, 1201 Eye Street NW., 8th Floor (2253), Washington, DC 20005.

SUPPLEMENTARY INFORMATION: Notice is hereby given in accordance with the Federal Advisory Committee Act, 5 U.S.C. Appendix (1988), of two meetings of the Native American Graves Protection and Repatriation Review Committee (Review Committee). The Review Committee was established in Section 8 of the Native American Graves Protection and Repatriation Act of 1990 (NAGPRA), 25 U.S.C. 3006.

Meeting, November 6–7, 2013

The Review Committee will meet on November 6–7, 2013, in the Ziibiwing Center of Anishinabe Culture and Lifeways, 6650 East Broadway, Mount Pleasant, MI 48858. This meeting will be open to the public. The agenda for this meeting will include the finalization of the Review Committee Report to Congress for 2013; the appointment of the subcommittee to draft the Review Committee Report to Congress for 2014 and discussion of the scope of the Report; and National NAGPRA Program reports. In addition, the agenda may include requests to the Review Committee for a recommendation to the Secretary of the Interior, as required by law, in order to effect the agreed-upon disposition of Native American human remains determined to be culturally unidentifiable; public comment by Indian tribes, Native Hawaiian organizations, museums, Federal agencies, and the public; requests to the Review Committee, pursuant to 25 U.S.C. 3006 (c)(3), for review and findings of fact related to the identity or cultural affiliation of human remains or other cultural items, or the return of such items; and facilitation of the resolution of disputes among parties convened by the Review Committee pursuant to 25 U.S.C. 3006 (c)(4). The agenda and materials for this meeting

will be posted on or before October 7, 2013, at *http://www.nps.gov/nagpra.*

The Review Committee is soliciting public comment by Indian tribes, Native Hawaiian organizations, museums, and Federal agencies on the following two topics: (1) The progress made, and any barriers encountered, in implementing NAGPRA and (2) the outcomes of disputes reviewed by the Review Committee pursuant to 25 U.S.C. 3006 (c)(4). The Review Committee also will consider other public comment by Indian tribes, Native Hawaiian organizations, museums, Federal agencies, and the public. A public comment request must, at minimum, include an abstract of the presentation and contact information for the presenter(s). Public comment requests must be received by September 20, 2013.

The Review Committee will consider requests for a recommendation to the Secretary of the Interior, as required by law, in order to effect the agreed-upon disposition of Native American human remains determined to be culturally unidentifiable (CUI). A CUI disposition request must include the appropriate, completed form posted on the National NAGPRA Program Web site and, as applicable, the ancillary materials noted on the form. To access and download the appropriate form—either the form for CUI with a ''tribal land'' or ''aboriginal land'' provenience or the form for CUI without a ''tribal land'' or ''aboriginal land'' provenience—go to *http://www.nps.gov/nagpra,* and then click on ''Request for CUI Disposition Form.'' CUI disposition requests must be received by August 30, 2013.

The Review Committee will consider requests, pursuant to 25 U.S.C. 3006 (c)(3), for review and findings of fact related to the identity or cultural affiliation of human remains or other cultural items, or the return of such items, where consensus among affected parties is unclear or uncertain. A request for findings of fact must be accompanied by a statement of the fact(s) at issue and supporting materials, including those exchanged by the parties to consultation concerning the Native American human remains and/or other cultural items. Requests for findings of fact must be received by August 16, 2013.

The Review Committee will consider requests, pursuant to 25 U.S.C. 3006 (c)(4), to convene parties and facilitate the resolution of a dispute, where consensus clearly has not been reached among affected parties regarding the identity or cultural affiliation of human remains or other cultural items, or the return of such items. A request to convene parties and facilitate the resolution of a dispute must be accompanied by a statement of the decision of the museum or Federal agency subject to the dispute resolution request, a statement of the issue and supporting materials, including those exchanged by the parties to consultation concerning the Native American human remains and/or other cultural items. Requests to convene parties and facilitate resolution of a dispute must be received by July 12, 2013.

Submissions may be made in one of three ways:

1. Electronically, as an attachment to a message (preferred for submissions of 10 pages or less). Electronic submissions are to be sent to *Sherry_Hutt@nps.gov.*

2. By mail, on a single compact disc (preferred for submissions of more than 10 pages). Mailed submissions are to be sent to: Designated Federal Officer, NAGPRA Review Committee, National Park Service, National NAGPRA Program, 1201 Eye Street NW., 8th Floor (2253), Washington, DC 20005.

3. By mail, in hard copy.

Such items are subject to posting on the National NAGPRA Program Web site prior to the meeting.

Teleconference, December 5, 2013

The Review Committee will also meet via teleconference on December 5, 2013, from 2 p.m. until approximately 4 p.m. EST, for the sole purpose of finalizing the Review Committee Report to Congress, should the item not be resolved by November 7. This meeting will be open to the public. Those who desire to attend the meeting should contact *NAGPRA@rap.midco.net,* between November 25 and December 3, 2013, to be provided the telephone access number for the meeting. An agenda for the meeting will be posted to the National NAGPRA Program Web site at *http://www.nps.gov/nagpra* on November 20, 2013. A transcript and minutes of the meeting will also appear on the Web site.

General Information

Information about NAGPRA, the Review Committee, and Review Committee meetings is available on the National NAGPRA Program Web site at *http://www.nps.gov/nagpra.* For the Review Committee's meeting procedures, click on ''Review Committee,'' then click on ''Procedures.'' Meeting minutes may be accessed by going to the Web site, then clicking on ''Review Committee,'' and then clicking on ''Meeting Minutes.'' Approximately fourteen weeks after each Review Committee meeting, the meeting transcript is posted for a limited time on the National NAGPRA Program Web site.

Review Committee members are appointed by the Secretary of the Interior. The Review Committee is responsible for monitoring the NAGPRA inventory and identification process; reviewing and making findings related to the identity or cultural affiliation of cultural items, or the return of such items; facilitating the resolution of disputes; compiling an inventory of culturally unidentifiable human remains that are in the possession or control of each Federal agency and museum, and recommending specific actions for developing a process for disposition of such human remains; consulting with Indian tribes and Native Hawaiian organizations and museums on matters affecting such tribes or organizations lying within the scope of work of the Committee; consulting with the Secretary of the Interior on the development of regulations to carry out NAGPRA; and making recommendations regarding future care of repatriated cultural items. The Review Committee's work is carried out during the course of meetings that are open to the public.

Before including your address, phone number, email address, or other personal identifying information in your comment, you should be aware that your entire comment—including your personal identifying information—may be made publicly available at any time. While you can ask us in your comment to withhold your personal identifying information from public review, we cannot guarantee that we will be able to do so.

Dated: April 4, 2013.

Sherry Hutt,

Designated Federal Officer, Native American Graves Protection and Repatriation Review Committee.

[FR Doc. 2013–08369 Filed 4–9–13; 8:45 am]

BILLING CODE 4312–50–P

DEPARTMENT OF THE INTERIOR

National Park Service

[NPS–WASO–NRNHL–12621; PPWOCRADI0, PCU00RP14.R50000]

National Register of Historic Places; Notification of Pending Nominations and Related Actions

Nominations for the following properties being considered for listing or related actions in the National Register were received by the National Park Service before March 16, 2013. Pursuant to § 60.13 of 36 CFR part 60, written comments are being accepted

concerning the significance of the nominated properties under the National Register criteria for evaluation. Comments may be forwarded by United States Postal Service, to the National Register of Historic Places, National Park Service, 1849 C St. NW., MS 2280, Washington, DC 20240; by all other carriers, National Register of Historic Places, National Park Service, 1201 Eye St. NW., 8th floor, Washington, DC 20005; or by fax, 202–371–6447. Written or faxed comments should be submitted by April 25, 2013. Before including your address, phone number, email address, or other personal identifying information in your comment, you should be aware that your entire comment—including your personal identifying information—may be made publicly available at any time. While you can ask us in your comment to withhold your personal identifying information from public review, we cannot guarantee that we will be able to do so.

Dated: March 20, 2013.

J. Paul Loether,

Chief, National Register of Historic Places/National Historic Landmarks Program.

DISTRICT OF COLUMBIA

District of Columbia

Park View School, (Public School Buildings of Washington, DC MPS), 3570 Warder St., NW., Washington, 13000213

GEORGIA

Crawford County

The Georgia Post Building, 100 GA 42 S., Knoxville, 13000214

Fulton County

Goodrum, May Patterson, House, 320 West Paces Ferry Rd., NW., Atlanta, 13000215

KANSAS

Ford County

Boot Hill Museum, (Roadside Kansas MPS), 500 W. Wyatt Earp Blvd., Dodge City, 13000216

Dodge City Municipal Building, 501 W. Spruce St., Dodge City, 13000217

Sedgwick County

Commodore Apartment Hotel, (Residential Resources of Wichita, Sedgwick County, Kansas 1870–1957 MPS), 222 E. Elm St., 601 N. Broadway Ave., Wichita, 13000218

Fourth National Bank Building, 100–110 N. Market St., Wichita, 13000219

Westside IOOF Lodge, 928–930 W. Douglas Ave., Wichita, 13000220

Woolf Brothers Clothing Company, 135 E. Douglas St., Wichita, 13000221

Washington County

Wayland, John F., House, 317 E. 6th St., Washington, 13000222

MISSOURI

Crawford County

Cuba High School Annex, 308 N. Smith St., Cuba, 13000223

MONTANA

Meagher County

Stockmen's Bank of Martinsdale, 9 Main St., Martinsdale, 13000224

NEW YORK

Wyoming County

Attica Market and Main Historic District, 2–28 & 19–45 Market St., 2–10 & 21–39 Main St., Attica, 13000225

NORTH CAROLINA

Avery County

Lowe, Robert Chester and Elsie H., House, 1010 Shawneehaw Ave., Banner Elk, 13000226

Burke County

Dunavant Cotton Manufacturing Company, 109 E. Fleming Dr., Morganton, 13000227

Haywood County

Francis Grist Mill, 14 Hugh Massie Rd., Waynesville, 13000228

NORTH DAKOTA

Billings County

32BI272, (Native American Occupation and Utilization of the Little Missouri River Grasslands MPS), Address Restricted, Fairfield, 13000229

32BI503, (Native American Occupation and Utilization of the Little Missouri River Grasslands MPS), Address Restricted, Fairfield, 13000230

Anderson Divide Archeological District, (Native American Occupation and Utilization of the Little Missouri River Grasslands MPS), Address Restricted, Fairfield, 13000231

McKenzie County

32MZ1005, (Native American Occupation and Utilization of the Little Missouri River Grasslands MPS), Address Restricted, Grassy Butte, 13000236

32MZ1647, (Native American Occupation and Utilization of the Little Missouri River Grasslands MPS) Address Restricted, Grassy Butte, 13000237

32MZ173, (Native American Occupation and Utilization of the Little Missouri River Grasslands MPS), Address Restricted, Charlson, 13000232

32MZ333, (Native American Occupation and Utilization of the Little Missouri River Grasslands MPS), Address Restricted, Alexander, 13000233

32MZ422, (Native American Occupation and Utilization of the Little Missouri River Grasslands MPS), Address Restricted, Grassy Butte, 13000234

32MZ732, (Native American Occupation and Utilization of the Little Missouri River Grasslands MPS), Address Restricted, Charlson, 13000235

Cinnamon Creek Ridge Archeological District, (Native American Occupation and Utilization of the Little Missouri River Grasslands MPS), Address Restricted, Arnegard, 13000238

WYOMING

Laramie County

Cheyenne Veterans Administration Hospital Historic District, (United States Second Generation Veterans Hospitals MPS), 2360 Pershing Blvd., Cheyenne, 13000239

A request to move has been made for the following resource:

NORTH CAROLINA

Wake County

Jones, Crabtree, House, N. of Raleigh off Old Wake Forest Rd., Raleigh, 73001376

[FR Doc. 2013–08281 Filed 4–9–13; 8:45 am]

BILLING CODE 4312–51–P

DEPARTMENT OF THE INTERIOR

National Park Service

[NPS–WASO–NAGPRA–12584; PPWOCRADN0–PCU00RP14.R50000]

Notice of Intent To Repatriate a Cultural Item: Arizona State Museum, University of Arizona, Tucson, AZ

AGENCY: National Park Service, Interior.

ACTION: Notice.

SUMMARY: The Arizona State Museum, University of Arizona, in consultation with the appropriate Indian tribes or Native Hawaiian organizations, has determined that the cultural item listed in this notice meets the definition of unassociated funerary object. Lineal descendants or representatives of any Indian tribe or Native Hawaiian organization not identified in this notice that wish to claim this cultural item should submit a written request to the Arizona State Museum. If no additional claimants come forward, transfer of control of the cultural item to the lineal descendants, Indian tribes, or Native Hawaiian organizations stated in this notice may proceed.

DATES: Lineal descendants or representatives of any Indian tribe or Native Hawaiian organization not identified in this notice that wish to claim these cultural items should submit a written request with information in support of the claim to the Arizona State Museum, University of Arizona, at the address in this notice by May 10, 2013.

ADDRESSES: John McClelland, NAGPRA Coordinator, Arizona State Museum, University of Arizona, P.O. Box 210026, Tucson, AZ 85721, telephone (520) 626–2950.

SUPPLEMENTARY INFORMATION: Notice is here given in accordance with the

Native American Graves Protection and Repatriation Act (NAGPRA), 25 U.S.C. 3005, of the intent to repatriate a cultural item under the control of the Arizona State Museum, University of Arizona, Tucson, AZ, that meets the definition of unassociated funerary object under 25 U.S.C. 3001.

This notice is published as part of the National Park Service's administrative responsibilities under NAGPRA, 25 U.S.C. 3003(d)(3). The determinations in this notice are the sole responsibility of the museum, institution, or Federal agency that has control of the Native American cultural items. The National Park Service is not responsible for the determinations in this notice.

History and Description of the Cultural Item

In 1930, a cultural item was removed from Queen Creek Ruin, also known as Sonoqui Pueblo, Pozos de Sonoqui, or Sun Temple Ruin (site AZ U:14:48(ASM)/SACATON:2:6(GP)) in Maricopa County, AZ, during legally authorized excavations conducted by the Gila Pueblo Foundation. The item was reportedly found in association with a human burial, but the human remains are not present in the collections. In December 1950, the Gila Pueblo Foundation closed and the item was donated to the Arizona State Museum. In 1953, the cultural item was transferred to the Field Museum of Natural History as a permanent loan. In 2013, the Field Museum transferred control of the item back to the Arizona State Museum. The unassociated funerary object is a stone bowl.

Queen Creek Ruin was a large habitation site that included trash mounds, burials, pithouses, canals, adobe compounds, and a ballcourt. Architectural features, the mortuary program, ceramic types, and other items of material culture are consistent with the Hohokam archaeological tradition and indicate occupation between approximately A.D. 950 and 1450.

Continuities of mortuary practices, ethnographic materials, and technology indicate affiliation of Hohokam settlements with present-day O'odham (Piman) and Puebloan cultures. On April 13, 2011, representatives of the Gila River Indian Community of the Gila River Indian Reservation, Arizona, submitted documentation that addresses continuities between the Hohokam and the O'odham tribes. Furthermore, oral traditions that are documented for the Ak Chin Indian Community of the Maricopa (Ak Chin) Indian Reservation, Arizona; Gila River Indian Community of the Gila River Indian Reservation, Arizona; Hopi Tribe of Arizona; Salt River Pima-Maricopa Indian Community of the Salt River Reservation, Arizona; and the Tohono O'odham Nation of Arizona support affiliation with Hohokam sites in central Arizona.

Determinations Made by the Arizona State Museum, University of Arizona

Officials of the Arizona State Museum, University of Arizona, have determined that:

- Pursuant to 25 U.S.C. 3001(3)(B), the cultural item described above is reasonably believed to have been placed with or near individual human remains at the time of death or later as part of the death rite or ceremony and is believed, by a preponderance of the evidence, to have been removed from a specific burial site of a Native American individual.
- Pursuant to 25 U.S.C. 3001(2), there is a relationship of shared group identity that can be reasonably traced between the unassociated funerary object and the Ak Chin Indian Community of the Maricopa (Ak Chin) Indian Reservation, Arizona; Gila River Indian Community of the Gila River Indian Reservation, Arizona; Hopi Tribe of Arizona; Salt River Pima-Maricopa Indian Community of the Salt River Reservation, Arizona; and the Tohono O'odham Nation of Arizona.

Additional Requestors and Disposition

Lineal descendants or representatives of any Indian tribe or Native Hawaiian organization not identified in this notice that wish to claim these cultural items should submit a written request with information in support of the claim to John McClelland, NAGPRA Coordinator, Arizona State Museum, University of Arizona, PO Box 210026, Tucson, AZ 85721, telephone (520) 626–2950 by May 10, 2013. After that date, if no additional claimants have come forward, transfer of control of the unassociated funerary object to the Ak Chin Indian Community of the Maricopa (Ak Chin) Indian Reservation, Arizona; Gila River Indian Community of the Gila River Indian Reservation, Arizona; Hopi Tribe of Arizona; Salt River Pima-Maricopa Indian Community of the Salt River Reservation, Arizona; and the Tohono O'odham Nation of Arizona may proceed.

The Arizona State Museum is responsible for notifying the Ak Chin Indian Community of the Maricopa (Ak Chin) Indian Reservation, Arizona; Gila River Indian Community of the Gila River Indian Reservation, Arizona; Hopi Tribe of Arizona; Salt River Pima-Maricopa Indian Community of the Salt River Reservation, Arizona; and the Tohono O'odham Nation of Arizona that this notice has been published.

Dated: March 15, 2013.

Sherry Hutt,

Manager, National NAGPRA Program.

[FR Doc. 2013–08368 Filed 4–9–13; 8:45 am]

BILLING CODE 4312–50–P

DEPARTMENT OF THE INTERIOR

National Park Service

[NPS–WASO–NAGPRA–12546; PPWOCRADN0–PCU00RP14.R50000]

Notice of Intent To Repatriate Cultural Items: The Field Museum of Natural History, Chicago, IL

AGENCY: National Park Service, Interior.

ACTION: Notice.

SUMMARY: The Field Museum of Natural History, in consultation with the appropriate Indian tribes or Native Hawaiian organizations, has determined that the cultural items listed in this notice meet the definition of sacred objects and objects of cultural patrimony. Lineal descendants or representatives of any Indian tribe or Native Hawaiian organization not identified in this notice that wish to claim these cultural items should submit a written request to The Field Museum of Natural History. If no additional claimants come forward, transfer of control of the cultural items to the lineal descendants, Indian tribes, or Native Hawaiian organizations stated in this notice may proceed.

DATES: Lineal descendants or representatives of any Indian tribe or Native Hawaiian organization not identified in this notice that wish to claim these cultural items should submit a written request with information in support of the claim to The Field Museum of Natural History at the address in this notice by May 10, 2013.

ADDRESSES: Helen Robbins, Repatriation Director, The Field Museum, 1400 South Lake Shore Drive, Chicago, IL 60605, telephone (312) 665–7317.

SUPPLEMENTARY INFORMATION: Notice is here given in accordance with the Native American Graves Protection and Repatriation Act (NAGPRA), 25 U.S.C. 3005, of the intent to repatriate cultural items under the control of The Field Museum of Natural History, Chicago, IL, that meet the definition of sacred objects and objects of cultural patrimony under 25 U.S.C. 3001.

This notice is published as part of the National Park Service's administrative

responsibilities under NAGPRA, 25 U.S.C. 3003(d)(3). The determinations in this notice are the sole responsibility of the museum, institution, or Federal agency that has control of the Native American cultural items. The National Park Service is not responsible for the determinations in this notice.

History and Description of the Cultural Items

The 90 cultural items consist of Western Apache ceremonial items collected at the San Carlos Apache Reservation and White Mountain Apache Reservation in the late 1800s and early 1900s. The items to be repatriated come from four separate Field Museum accessions.

Of the 90 requested cultural items, 21 items come from Field Museum accession 769. Charles Owen, acting on behalf of The Field Museum of Natural History, purchased these 21 items from various individuals on the White Mountain Apache Reservation, Arizona, in the spring of 1901, during a Field Columbian Museum expedition to the Southwest. The requested items include 8 medicine hats, 5 buckskin medicine shirts, 3 cradle charms/ornaments, 1 necklace, 1 wristlet of medicine beads, 2 medicine shields, and 1 medicine cord with a wooden figure.

Of the 90 requested cultural items, 67 items come from Field Museum accession 847. Charles Owen purchased these 67 items from various individuals on the White Mountain Apache and San Carlos Reservations during a 1903 Field Columbian Museum expedition to the Southwest. The requested items include 11 medicine strings, 18 painted medicine shirts and buckskins, 12 medicine hats, 7 necklaces, 4 wooden figures, 3 amulets, 2 medicine rings, 2 buckskin bags with wooden figures, 2 wristlets, 1 necklace and bag, 1 group of 12 eagle breath feathers, 1 hunting charm, 1 medicine shield, 1 medicine stick, and 1 wooden medicine cross.

Of the 90 requested cultural items, one item comes from Field Museum accession 895. This item was purchased by the Field Columbian Museum in 1904, in Chicago, from an individual identified as Apache. This item is a wooden figure, and is identified in collection records as an ''Apache's Medicine-man's effigy.'' Charles Owen had previously seen the figure on the Apache Reservation during one of his expeditions in 1901 or 1903, but had been unable to purchase it for lack of funds.

Of the 90 requested cultural items, one item comes from Field Museum accession 1926. The Field Museum of Natural History accessioned this item in 1931, receiving it as a gift from Mrs. A. Shreve Badger of Chicago. This item is identified in collection records as a ''medicine man's hat.'' According to donor information, the hat was originally collected on the Fort Apache Reservation in 1884 or 1885.

The 90 cultural items have been identified as Native American sacred objects and objects of cultural patrimony through museum records, scholarly publications, primary documents, consultation information, and testimony provided by representatives of the Western Apache NAGPRA Working group, a consortium of the San Carlos Apache Tribe of the San Carlos Reservation, Arizona; Tonto Apache Tribe of Arizona; White Mountain Apache Tribe of the Fort Apache Reservation, Arizona; and the Yavapai-Apache Nation of the Camp Verde Indian Reservation, Arizona.

Determinations Made by The Field Museum of Natural History

Officials of The Field Museum have determined that:

- Pursuant to 25 U.S.C. 3001(3)(C), the 90 cultural items described above are specific ceremonial objects needed by traditional Native American religious leaders for the practice of traditional Native American religions by their present-day adherents.
- Pursuant to 25 U.S.C. 3001(3)(D), the 90 cultural items described above have ongoing historical, traditional, or cultural importance central to the Native American group or culture itself, rather than property owned by an individual.
- Pursuant to 25 U.S.C. 3001(2), there is a relationship of shared group identity that can be reasonably traced between the 90 cultural items and the San Carlos Apache Tribe of the San Carlos Reservation, Arizona; Tonto Apache Tribe of Arizona; White Mountain Apache Tribe of the Fort Apache Reservation, Arizona; and the Yavapai-Apache Nation of the Camp Verde Indian Reservation, Arizona.

Additional Requestors and Disposition

Lineal descendants or representatives of any Indian tribe or Native Hawaiian organization not identified in this notice that wish to claim these cultural items should submit a written request with information in support of the claim to Helen Robbins, Repatriation Director, The Field Museum, 1400 South Lake Shore Drive, Chicago, IL 60605, telephone (312) 665–7317, by May 10, 2013. After that date, if no additional claimants have come forward, transfer of control of the sacred objects and objects of cultural patrimony through the Western Apache NAGPRA Working Group, to the San Carlos Apache Tribe of the San Carlos Reservation, Arizona; Tonto Apache Tribe of Arizona; White Mountain Apache Tribe of the Fort Apache Reservation, Arizona; and Yavapai-Apache Nation of the Camp Verde Indian Reservation, Arizona, may proceed.

The Field Museum of Natural History is responsible for notifying the Apache Tribe of Oklahoma; Fort McDowell Yavapai Nation, Arizona; Fort Sill Apache Tribe of Oklahoma; Jicarilla Apache Nation, New Mexico; Mescalero Apache Tribe of the Mescalero Reservation, New Mexico; San Carlos Apache Tribe of the San Carlos Reservation, Arizona; Tonto Apache Tribe of Arizona; White Mountain Apache Tribe of the Fort Apache Reservation, Arizona; and the Yavapai-Apache Nation of the Camp Verde Indian Reservation, Arizona, that this notice has been published.

Dated: March 11, 2013.

Sherry Hutt,

Manager, National NAGPRA Program.

[FR Doc. 2013–08367 Filed 4–9–13; 8:45 am]

BILLING CODE 4312–50–P

DEPARTMENT OF THE INTERIOR

Bureau of Reclamation

[A10–1971–1000–000–00–0–0, 2050400]

Central Valley Project Improvement Act, Water Management Plans

AGENCY: Bureau of Reclamation, Interior.

ACTION: Notice of availability.

SUMMARY: The following Water Management Plans are available for review:

- Carpinteria Valley Water District
- Gravelly Ford Water District
- Hills Valley Irrigation District
- San Juan Water District
- San Luis Water District
- Shafter-Wasco Irrigation District
- Tea Pot Dome Irrigation District

To meet the requirements of the Central Valley Project Improvement Act of 1992 and the Reclamation Reform Act of 1982, the Bureau of Reclamation developed and published the Criteria for Evaluating Water Management Plans (Criteria). For the purpose of this announcement, Water Management Plans (Plans) are considered the same as Water Conservation Plans. The above entities have each developed a Plan, which Reclamation has evaluated and preliminarily determined to meet the requirements of these Criteria.

Reclamation is publishing this notice in order to allow the public to review the Plans and comment on the preliminary determinations. Public comment on Reclamation's preliminary (i.e., draft) determination of Plan adequacy is invited at this time.

DATES: All public comments must be received by May 10, 2013.

ADDRESSES: Please mail comments to Ms. Laurie Sharp, Bureau of Reclamation, 2800 Cottage Way, MP–410, Sacramento, California, 95825, or email at *lsharp@usbr.gov.*

FOR FURTHER INFORMATION CONTACT: To be placed on a mailing list for any subsequent information, please contact Ms. Sharp at the email address above or 916–978–5232 (TDD 978–5608).

SUPPLEMENTARY INFORMATION: We are inviting the public to comment on our preliminary (i.e., draft) determination of Plan adequacy. Section 3405(e) of the Central Valley Project Improvement Act (Title 34 Pub. L. 102–575), requires the Secretary of the Interior to establish and administer an office on Central Valley Project water conservation best management practices that shall ''develop criteria for evaluating the adequacy of all water conservation plans developed by project contractors, including those plans required by section 210 of the Reclamation Reform Act of 1982.'' Also, according to Section 3405(e)(1), these criteria must be developed ''with the purpose of promoting the highest level of water use efficiency reasonably achievable by project contractors using best available cost-effective technology and best management practices.'' These criteria state that all parties (Contractors) that contract with Reclamation for water supplies (municipal and industrial contracts over 2,000 acre-feet and agricultural contracts over 2,000 irrigable acres) must prepare a Plan that contains the following information:

1. Description of the District;
2. Inventory of Water Resources;
3. Best Management Practices (BMPs) for Agricultural Contractors;
4. BMPs for Urban Contractors;
5. Plan Implementation;
6. Exemption Process;
7. Regional Criteria; and
8. Five-Year Revisions.

Reclamation evaluates Plans based on these criteria. A copy of these Plans will be available for review at Reclamation's Mid-Pacific Regional Office, 2800 Cottage Way, MP–410, Sacramento, California, 95825. Our practice is to make comments, including names and home addresses of respondents, available for public review. If you wish to review a copy of these Plans, please contact Ms. Sharp.

Public Disclosure

Before including your address, phone number, email address, or other personal identifying information in your comment, you should be aware that your entire comment—including your personal identifying information—may be made publicly available at any time. While you can ask us in your comment to withhold your personal identifying information from public review, we cannot guarantee that we will be able to do so.

Dated: April 4, 2013.

Richard M. Stevenson,

Acting, Regional Resources Manager, Mid-Pacific Region, Bureau of Reclamation.

[FR Doc. 2013–08339 Filed 4–9–13; 8:45 am]

BILLING CODE 4310–MN–P

DEPARTMENT OF THE INTERIOR

Bureau of Reclamation

Glen Canyon Dam Adaptive Management Work Group

AGENCY: Bureau of Reclamation, Interior.

ACTION: Notice of public meeting.

SUMMARY: The Glen Canyon Dam Adaptive Management Work Group (AMWG) makes recommendations to the Secretary of the Interior concerning Glen Canyon Dam operations and other management actions to protect resources downstream of Glen Canyon Dam, consistent with the Grand Canyon Protection Act. The AMWG meets two to three times a year.

DATES: The May 8, 2013, AMWG WebEx/conference call will begin at 3 p.m. (EDT), 1 p.m. (MDT), and 12 p.m. (PDT) and conclude three (3) hours later in the respective time zones. See call-in information in the **SUPPLEMENTARY INFORMATION** section.

FOR FURTHER INFORMATION CONTACT: Glen Knowles, Bureau of Reclamation, telephone (801) 524–3781; facsimile (801) 524–3858; email at *gknowles@usbr.gov.*

SUPPLEMENTARY INFORMATION: The Glen Canyon Dam Adaptive Management Program (AMP) was implemented as a result of the Record of Decision on the Operation of Glen Canyon Dam Final Environmental Impact Statement to comply with consultation requirements of the Grand Canyon Protection Act (Pub. L. 102–575) of 1992. The AMP includes a Federal advisory committee, the AMWG, a technical work group, a Grand Canyon Monitoring and Research Center, and independent review panels. The technical work group is a subcommittee of the AMWG and provides technical advice and recommendations to the AMWG.

Agenda: The primary purpose of the conference call will be for the AMWG to review the Glen Canyon Dam Adaptive Management Budget for Fiscal Year 2014. There will also be updates on renewal of the AMWG Charter and the Long-Term Experimental and Management Plan Environmental Impact Statement. To participate in the WebEx/conference call, please use the following instructions:

1. Go to: *https://ucbor.webex.com/ucbor/j.php?ED=200532532&UID=0&PW=NNmRiNDNiZjE0&RT=MiM2.*
2. If requested, enter your name and email address.
3. If a password is required, enter the meeting password: AMWG.
4. Click ''Join.''

Audio Conference Information:

Phone Number: 1–866–917–3895

Passcode: 6622891

Meeting Number: 803 977 037

There will be limited ports available, so if you wish to participate, please contact Linda Whetton at 801–524–3880 to register.

To view a copy of the agenda and documents related to the above meeting, please visit Reclamation's Web site at: *http://www.usbr.gov/uc/rm/amp/amwg/mtgs/13may08/index.html.* Time will be allowed for any individual or organization wishing to make formal oral comments on the call. To allow for full consideration of information by the AMWG members, written notice must be provided to Glen Knowles, Bureau of Reclamation, Upper Colorado Regional Office, 125 South State Street, Room 6107, Salt Lake City, Utah 84138; telephone 801–524–3781; facsimile 801–524–3858; email at *gknowles@usbr.gov* at least five (5) days prior to the call. Any written comments received will be provided to the AMWG members.

Public Disclosure of Comments

Before including your name, address, phone number, email address, or other personal identifying information in your comment, you should be aware that your entire comment—including your personal identifying information—may be made publicly available at any time. While you can ask us in your comment to withhold your personal identifying information from public review, we cannot guarantee that we will be able to do so.

Dated: March 27, 2013.

Glen Knowles,

Chief, Adaptive Management Group, Environmental Resources Division, Upper Colorado Regional Office, Salt Lake City, Utah.

[FR Doc. 2013–08334 Filed 4–9–13; 8:45 am]

BILLING CODE 4310–MN–P

DEPARTMENT OF THE INTERIOR

Office of Surface Mining Reclamation and Enforcement

Notice of Proposed Information Collection

AGENCY: Office of Surface Mining Reclamation and Enforcement.

ACTION: Notice and request for comments.

SUMMARY: In compliance with the Paperwork Reduction Act of 1995, the Office of Surface Mining Reclamation and Enforcement (OSM) is announcing that the information collection request for the Exemption for Coal Extraction Incidental to the Extraction of Other Minerals, has been submitted to the Office of Management and Budget (OMB) for review and approval. The information collection request describes the nature of the information collection and its expected burden and cost.

DATES: Comments must be submitted on or before May 10, 2013, to be assured of consideration.

ADDRESSES: Submit comments to the Office of Information and Regulatory Affairs, Office of Management and Budget, Department of the Interior Desk Officer, via email at *OIRA_submission@omb.eop.gov,* or by facsimile to (202) 395–5806. Also, please send a copy of your comments to John Trelease, Office of Surface Mining Reclamation and Enforcement, 1951 Constitution Ave NW., Room 203—SIB, Washington, DC 20240, or electronically to *jtrelease@osmre.gov*. Please reference 1029–0089 in your correspondence.

FOR FURTHER INFORMATION CONTACT: To receive a copy of the information collection request contact John Trelease at (202) 208–2783, or electronically at *jtrelease@osmre.gov*. You may also review the information collection request online at *http://www.reginfo.gov*. Follow the instructions to review Department of the Interior collections under review by OMB.

SUPPLEMENTARY INFORMATION: OMB regulations at 5 CFR 1320, which implement provisions of the Paperwork Reduction Act of 1995 (Pub. L. 104–13), require that interested members of the public and affected agencies have an opportunity to comment on information collection and recordkeeping activities [see 5 CFR 1320.8(d)]. OSM has submitted a request to OMB to renew its approval for the collection of information found at 30 CFR Part 702—Exemption for Coal Extraction Incidental to the Extraction of Other Minerals. OSM is requesting a 3-year term of approval for this collection. This collection is required to obtain or retain a benefit.

An agency may not conduct or sponsor, and a person is not required to respond to, a collection of information unless it displays a currently valid OMB control number. The OMB control number for this collection of information is 1029–0089 and is displayed at 30 CFR 702.10.

As required under 5 CFR 1320.8(d), a **Federal Register** notice soliciting comments on this collection of information was published on January 22, 2013 (78 FR 4437). No comments were received. This notice provides the public with an additional 30 days in which to comment on the following information collection activity:

Title: 30 CFR Part 702—Exemption for Coal Extraction Incidental to the Extraction of Other Minerals.

OMB Control Number: 1029–0089.

Summary: This Part implements the requirement in Section 701(28) of the Surface Mining Control and Reclamation Act of 1977 (SMCRA), which grants an exemption from the requirements of SMCRA to operators extracting not more than 16⅔ percentage tonnage of coal incidental to the extraction of other minerals. This information will be used by the regulatory authorities to make that determination.

Bureau Form Number: None.

Frequency of Collection: Once and annually thereafter.

Description of Respondents: Producers of coal and other minerals, and State regulatory authorities.

Total Annual Responses: 155.

Total Annual Burden Hours: 535.

Total Non-wage Costs: $600.

Send comments on the need for the collection of information for the performance of the functions of the agency; the accuracy of the agency's burden estimates; ways to enhance the quality, utility and clarity of the information collection; and ways to minimize the information collection burden on respondents, such as use of automated means of collection of the information, to the offices listed in the **ADDRESSES** section. Please refer to OMB control number 1029–0089 in all correspondence.

Before including your address, phone number, email address, or other personal identifying information in your comment, you should be aware that your entire comment—including your personal identifying information—may be made publicly available at any time. While you can ask us in your comment to withhold your personal identifying information from public review, we cannot guarantee that we will be able to do so.

Dated: April 4, 2013.

Andrew F. DeVito,

Chief, Division of Regulatory Support.

[FR Doc. 2013–08389 Filed 4–9–13; 8:45 am]

BILLING CODE 4310–05–P

INTERNATIONAL TRADE COMMISSION

[Investigation No. 731–TA–909 (Second Review)]

Low Enriched Uranium From France; Scheduling of a Full Five-year Review Concerning the Antidumping Duty Order on Low Enriched Uranium from France

AGENCY: United States International Trade Commission.

ACTION: Notice.

SUMMARY: The Commission hereby gives notice of the scheduling of a full review pursuant to section 751(c)(5) of the Tariff Act of 1930 (19 U.S.C. 1675(c)(5)) (the Act) to determine whether revocation of the antidumping duty order on low enriched uranium from France would be likely to lead to continuation or recurrence of material injury within a reasonably foreseeable time. For further information concerning the conduct of this review and rules of general application, consult the Commission's Rules of Practice and Procedure, part 201, subparts A through E (19 CFR part 201), and part 207, subparts A, D, E, and F (19 CFR part 207).

DATES: *Effective Date:* April 4, 2013.

FOR FURTHER INFORMATION CONTACT: Christopher J. Cassise (202–708–5408), Office of Investigations, U.S. International Trade Commission, 500 E Street SW., Washington, DC 20436. Hearing-impaired persons can obtain information on this matter by contacting the Commission's TDD terminal on 202–205–1810. Persons with mobility impairments who will need special assistance in gaining access to the Commission should contact the Office of the Secretary at 202–205–2000. General information concerning the

Commission may also be obtained by accessing its internet server (*http://www.usitc.gov*). The public record for this review may be viewed on the Commission's electronic docket (EDIS) at *http://edis.usitc.gov.*

SUPPLEMENTARY INFORMATION:

Background. On March 8, 2013, the Commission determined that circumstances warranted conducting a full review notwithstanding the inadequate respondent interested party group response to the Commission's notice of institution of the subject five-year review, pursuant to section 751(c)(5) of the Act (78 FR 19311, March 29, 2013). A record of the Commissioners' votes, the Commission's statement on adequacy, and any individual Commissioner's statements are available from the Office of the Secretary and at the Commission's Web site.

Participation in the review and public service list. Persons, including industrial users of the subject merchandise and, if the merchandise is sold at the retail level, representative consumer organizations, wishing to participate in this review as parties must file an entry of appearance with the Secretary to the Commission, as provided in section 201.11 of the Commission's rules, by 45 days after publication of this notice. A party that filed a notice of appearance following publication of the Commission's notice of institution of the review need not file an additional notice of appearance. The Secretary will maintain a public service list containing the names and addresses of all persons, or their representatives, who are parties to the review.

Limited disclosure of business proprietary information (BPI) under an administrative protective order (APO) and BPI service list. Pursuant to section 207.7(a) of the Commission's rules, the Secretary will make BPI gathered in this review available to authorized applicants under the APO issued in the review, provided that the application is made by 45 days after publication of this notice. Authorized applicants must represent interested parties, as defined by 19 U.S.C. 1677(9), who are parties to the review. A party granted access to BPI following publication of the Commission's notice of institution of the review need not reapply for such access. A separate service list will be maintained by the Secretary for those parties authorized to receive BPI under the APO.

Staff report. The prehearing staff report in the review will be placed in the nonpublic record on August 20, 2013, and a public version will be issued thereafter, pursuant to section 207.64 of the Commission's rules.

Hearing. The Commission will hold a hearing in connection with the review beginning at 9:30 a.m. on September 10, 2013, at the U.S. International Trade Commission Building. Requests to appear at the hearing should be filed in writing with the Secretary to the Commission on or before September 3, 2013. A nonparty who has testimony that may aid the Commission's deliberations may request permission to present a short statement at the hearing. All parties and nonparties desiring to appear at the hearing and make oral presentations should attend a prehearing conference to be held at 9:30 a.m. on September 5, 2013, at the U.S. International Trade Commission Building. Oral testimony and written materials to be submitted at the public hearing are governed by sections 201.6(b)(2), 201.13(f), 207.24, and 207.66 of the Commission's rules. Parties must submit any request to present a portion of their hearing testimony *in camera* no later than 7 business days prior to the date of the hearing.

Written submissions. Each party to the review may submit a prehearing brief to the Commission. Prehearing briefs must conform with the provisions of section 207.65 of the Commission's rules; the deadline for filing is August 29, 2013. Parties may also file written testimony in connection with their presentation at the hearing, as provided in section 207.24 of the Commission's rules, and posthearing briefs, which must conform with the provisions of section 207.67 of the Commission's rules. The deadline for filing posthearing briefs is September 19, 2013; witness testimony must be filed no later than three days before the hearing. In addition, any person who has not entered an appearance as a party to the review may submit a written statement of information pertinent to the subject of the review on or before September 19, 2013. On October 10, 2012, the Commission will make available to parties all information on which they have not had an opportunity to comment. Parties may submit final comments on this information on or before October 15, 2013, but such final comments must not contain new factual information and must otherwise comply with section 207.68 of the Commission's rules. All written submissions must conform with the provisions of section 201.8 of the Commission's rules; any submissions that contain BPI must also conform with the requirements of sections 201.6, 207.3, and 207.7 of the Commission's rules. Please be aware that the Commission's rules with respect to electronic filing have been amended. The amendments took effect on November 7, 2011. See 76 FR 61937 (Oct. 6, 2011) and the newly revised Commission's Handbook on E-Filing, available on the Commission's Web site at *http://edis.usitc.gov.*

Additional written submissions to the Commission, including requests pursuant to section 201.12 of the Commission's rules, shall not be accepted unless good cause is shown for accepting such submissions, or unless the submission is pursuant to a specific request by a Commissioner or Commission staff.

In accordance with sections 201.16(c) and 207.3 of the Commission's rules, each document filed by a party to the review must be served on all other parties to the review (as identified by either the public or BPI service list), and a certificate of service must be timely filed. The Secretary will not accept a document for filing without a certificate of service.

Authority: This review is being conducted under authority of title VII of the Tariff Act of 1930; this notice is published pursuant to section 207.62 of the Commission's rules.

Issued: April 4, 2013.

By order of the Commission.

Lisa R. Barton,

Acting Secretary to the Commission.

[FR Doc. 2013–08305 Filed 4–9–13; 8:45 am]

BILLING CODE 7020–02–P

INTERNATIONAL TRADE COMMISSION

[Investigation Nos. 701–TA–489 and 731–TA–1201 (Final)]

Drawn Stainless Steel Sinks From China

Determinations

On the basis of the record [1] developed in the subject investigations, the United States International Trade Commission (Commission) determines, pursuant to sections 705(b) and 735(b) of the Tariff Act of 1930 (19 U.S.C. 1671d(b)) and (19 U.S.C. 1673d(b)) (the Act), that an industry in the United States is materially injured by reason of imports of drawn stainless steel sinks from China, provided for in subheading 7324.10.00 of the Harmonized Tariff Schedule of the United States, that the U.S. Department of Commerce has determined are subsidized and sold in

[1] The record is defined in sec. 207.2(f) of the Commission's Rules of Practice and Procedure (19 CFR 207.2(f)).

the United States at less than fair value (ALTFV@).[2]

Background

The Commission instituted these investigations effective March 1, 2012, following receipt of a petition filed with the Commission and Commerce by Elkay Manufacturing Company, Oak Brook, IL. The final phase of the investigations was scheduled by the Commission following notification of a preliminary determinations by Commerce that imports of drawn stainless steel sinks from China were subsidized within the meaning of section 703(b) of the Act (19 U.S.C. 1671b(b)) and dumped within the meaning of 733(b) of the Act (19 U.S.C. 1673b(b)). Notice of the scheduling of the final phase of the Commission's investigations and of a public hearing to be held in connection therewith was given by posting copies of the notice in the Office of the Secretary, U.S. International Trade Commission, Washington, DC, and by publishing the notice in the **Federal Register** on October 22, 2012 (77 FR 64545). The hearing was held in Washington, DC, on February 21, 2013, and all persons who requested the opportunity were permitted to appear in person or by counsel.

The Commission transmitted its determinations in these investigations to the Secretary of Commerce on April 4, 2013. The views of the Commission are contained in USITC Publication 4390 (April 2013), entitled *Drawn Stainless Steel Sinks from China: Investigation Nos.701–TA–489 and 731–TA–1201 (Final).*

Issued: April 4, 2013.
By order of the Commission.

Lisa R. Barton,

Acting Secretary to the Commission.

[FR Doc. 2013–08304 Filed 4–9–13; 8:45 am]

BILLING CODE 7020–02–P

[2] All six Commissioners voted in the affirmative.

DEPARTMENT OF JUSTICE

Notice of Lodging of Proposed Consent Decree Under the Comprehensive Environmental Response, Compensation, and Liability Act of 1980, as Amended (''CERCLA''), 42 U.S.C. 9601 et seq.

On March 27, 2013, the Department of Justice lodged a proposed consent decree (''Decree'') with the United States District Court for the Northern District of New York in the lawsuit entitled *United States, State of New York and St. Regis Mohawk Tribe* v. *Alcoa Inc. and Reynolds Metals Co., Civil Action No.* 7:13-cv-00337–NAM–TWD. The Decree resolves claims asserted under Section 107(a) of the Comprehensive Environmental Response, Compensation, and Liability Act (''CERCLA''), 42 U.S.C. 9607(a), against Alcoa Inc. and Reynolds Metals Co. (''Defendants'') for natural resource damages resulting from the release of hazardous substances at or from the Alcoa and Reynolds sites located near the Town of Massena, St. Lawrence County, New York. The Decree provides for the Defendants to pay assessment costs, pay for natural resource restoration projects, purchase and transfer real property to be included in an existing State of New York Wildlife Management Area, pay for Tribal cultural restoration projects, and perform certain restoration projects. The Defendants' work and payment obligation under the Decree total approximately $19.4 million.

Attachment A to the Decree is the St. Lawrence River Environment Natural Resource Damage Assessment: Restoration and Compensation Determination Plan and Environmental Assessment (''RCDP''). The RCDP describes the natural resource injuries and associated losses and outlines proposed restoration projects. Notice of the issuance of the RCDP was published by the National Oceanic and Atmospheric Administration in the **Federal Register** on April 4, 2013, triggering the public comment period for that document. 78 Fed. Reg. 20298 (April 4, 2013).

The publication of this notice opens a period for public comment on the Decree. Comments should be addressed to the Assistant Attorney General, Environment and Natural Resources Division, and should refer to *United States, State of New York and St. Regis Mohawk Tribe* v. *Alcoa Inc. and Reynolds Metals Co.,* D.J. Ref. No. 90–11–3–558. All comments must be submitted no later than thirty (30) days after the publication date of this notice. Comments may be submitted either by email or by mail:

To submit comments:	*Send them to:*
By email ..	*pubcomment-ees.enrd@usdoj.gov.*
By mail	Assistant Attorney General, U.S. DOJ–ENRD, P.O. Box 7611, Washington, DC 20044–7611.

During the public comment period, the Decree may be examined and downloaded at this Justice Department Web site: *http://www.usdoj.gov/enrd/Consent_Decrees.html.* We will provide a paper copy of the Decree upon written request and payment of reproduction costs. Please mail your request and payment to:

Consent Decree Library, U.S. DOJ–ENRD, P.O. Box 7611, Washington, DC 20044–7611.

Please enclose a check or money order for $155.25 (25 cents per page reproduction cost) payable to the United States Treasury. For a paper copy of the consent decree without the appendices the cost is $4.75.

Brian Donohue,

Acting Assistant Section Chief, Environmental Enforcement Section, Environment and Natural Resources Division.

[FR Doc. 2013–08278 Filed 4–9–13; 8:45 am]

BILLING CODE 4410–15–P

DEPARTMENT OF JUSTICE

Notice of Lodging of Proposed Consent Decree Under the Comprehensive Environmental Response Compensation and Liability Act, Concerning Natural Resource Damages

On April 3, 2013, the Department of Justice lodged a proposed Consent Decree with the United States District Court for the Southern District of Texas in the lawsuit entitled *United States and the State of Texas* v. *Arkema, Inc,* Civil Action No. 13-cv-00935 (S.D. Tex.).

Co-plaintiffs United States and State of Texas seek redress from Defendant Akema, Inc. for damages to natural resources that resulted from discharge of hazardous substances at and from a facility that formulated agricultural chemicals, located in the vicinity of 201 West Dodge Street, Bryan, Brazos County, Texas.

Under the settlement embodied in the proposed Decree, Arkema will pay the federal and state natural resource trustees a total of $1.4 million, of which more than $1.1 million will be jointly administered and used by those trustees to restore, replace, or acquire the equivalent of the injured natural resources. The balance of the payment will be used to reimburse the trustees for previously-incurred assessment costs (almost $0.160 million to the United States and almost $0.124 million to the State). Also under the proposed settlement, the United States covenants not to sue Arkema for natural resource damages at the facility under specified provisions of the Clean Water Act and the Comprehensive Environmental Response Compensation and Liability Act. The State covenants not to sue Arkema on similar terms.

The publication of this notice opens a period for public comment on the proposed Decree. Comments should be addressed to the Assistant Attorney General, Environment and Natural Resources Division, and should refer to *United States and Texas* v. *Arkema, Inc.,* D.J. Ref. No. 90–11–3–09893. All comments must be received no later than thirty (30) days after the publication date of this notice. Comments may be submitted either by email or by mail:

To submit comments:	*Send them to:*
By email ..	*pubcomment-ees.enrd@usdoj.gov.*
By mail	Assistant Attorney General, U.S. DOJ–ENRD, P.O. Box 7611, Washington, DC 20044–7611.

During the public comment period, the proposed may be examined and downloaded at this Justice Department Web site: *http://www.usdoj.gov/enrd/Consent_Decrees.html.* We will provide a paper copy of the proposed Decree upon written request and payment of reproduction costs. Please mail your request and payment to:

Consent Decree Library, U.S. DOJ–ENRD, P.O. Box 7611, Washington, DC 20044–7611.

Please enclose a check or money order for $4.25 (25 cents per page reproduction cost) payable to the United States Treasury.

Maureen Katz,

Assistant Section Chief, Environmental Enforcement Section, Environment and Natural Resources Division.

[FR Doc. 2013–08309 Filed 4–9–13; 8:45 am]

BILLING CODE 4410–15–P

DEPARTMENT OF JUSTICE

Notice of Proposed Consent Decree Under the Clean Air Act

On April 4, 2013, the Department of Justice lodged a proposed Consent Decree with the United States District Court for the Eastern District of Missouri, in the lawsuit entitled *United States* v. *Tyson Foods, Inc., et al,* Civil Action No. 1:13-cv-56. The United States' Complaint names Tyson Foods, Inc. (Tyson); IBP Redevelopment Corp.; IBP Food Co.; Foodbrands Supply Chain Services, Inc.; Tyson Chicken, Inc.; Tyson Deli, Inc.; Tyson Fresh Meats, Inc.; Tyson Poultry, Inc.; Tyson Prepared Foods, Inc.; Tyson Processing Services, Inc.; and Tyson Refrigerated Processed Meats, Inc.

The United States filed this lawsuit under the Clean Air Act (CAA), 42 U.S.C. Sections 7412(r)(7) and 7413 (b)(2), for noncompliance with the requirements of the chemical accident prevention provisions of the CAA, including failure to test or replace safety relief valves, improperly co-located gas-fired boilers and ammonia compressors, and other failures to abide by the Risk Management Program (''RMP'') requirements of Section 112(r)(7) of the Act. The proposed Consent Decree, which resolves all of these claims, requires Tyson to undertake extensive measures to ensure compliance with RMP regulatory requirements, including comprehensive third-party audits of RMP components at all 23 Tyson facilities within Missouri, Kansas, Iowa, and Nebraska. Tyson is required correct any violations found within specified periods of time and certify the completion of that work.

Tyson will also audit each facility to determine the thickness of threaded piping connections used in its refrigeration systems. Tyson will replace and/or otherwise correct any non-compliant piping it finds in its facilities.

Tyson must also pay a civil penalty of $3,950,000 and undertake a supplemental environmental project. Tyson will purchase and deliver emergency equipment that is relevant to responses to emergencies involving chemicals that are regulated pursuant to the CAA Risk Management Program, to fire departments in the affected communities within 180 days after the Effective Date of the Consent Decree.

The Consent Decree provides Tyson with a release for the RMP violations alleged in the Complaint, and for other RMP violations uncovered by the audits that Tyson fully and timely corrects pursuant to the Consent Decree.

The publication of this notice opens a period for public comment on the Proposed Consent Decree. Comments should be addressed to the Assistant Attorney General, Environment and Natural Resources Division, Ignacia S. Moreno, and should refer to *United States* v. *Tyson Foods, Inc. et al.,* D.J. Ref. No. 90–5–2–1–10377. All comments must be submitted no later than thirty (30) days after the publication date of this notice. Comments may be submitted either by email or by mail:

To submit comments:	Send them to:
By email ...	*pubcomment-ees.enrd@usdoj.gov.*
By mail	Assistant Attorney General, U.S. DOJ–ENRD, P.O. Box 7611, Washington, D.C. 20044–7611.

During the public comment period, the Proposed Consent Decree may be examined and downloaded at this Justice Department Web site: *http://www.usdoj.gov/enrd/Consent_Decrees.html.* We will provide a paper copy of the Proposed Consent Decree upon written request and payment of reproduction costs. Please mail your request and payment to: Consent Decree Library, U.S. DOJ–ENRD, P.O. Box 7611, Washington, DC 20044–7611.

Please enclose a check or money order for $13.50 (25 cents per page reproduction cost) payable to the United States Treasury.

Robert M. Maher, Jr.,

Assistant Section Chief, Environmental Enforcement Section, Environment and Natural Resources Division.

[FR Doc. 2013–08357 Filed 4–9–13; 8:45 am]

BILLING CODE 4410–15–P

LEGAL SERVICES CORPORATION

Sunshine Act Meetings

DATE AND TIME: The Legal Services Corporation's Board of Directors and its six committees will meet April 14–16, 2013. On Sunday, April 14, the first meeting will commence at 2:30 p.m., Eastern Daylight Time (EDT), with the meeting thereafter commencing promptly upon adjournment of the immediately preceding meeting. On Monday, April 15, the first meeting will commence at 9:00 a.m., EDT, with each meeting thereafter commencing promptly upon adjournment of the immediately preceding meeting. On Tuesday, April 16, the Board meeting will commence at 9:00 a.m., EDT, and will continue until the conclusion of the Board's agenda.

LOCATION: F. William McCalpin Conference Center, Legal Services Corporation, 3333 K Street, NW., Washington DC 20007.

PUBLIC OBSERVATION: Unless otherwise noted herein, the Board and all committee meetings will be open to public observation. Members of the public who are unable to attend in person but wish to listen to the public proceedings may do so by following the telephone call-in directions provided below.

CALL-IN DIRECTIONS FOR OPEN SESSIONS:

• Call toll-free number: 1–866–451–4981;

• When prompted, enter the following numeric pass code: 5907707348

• When connected to the call, please immediately ''MUTE'' your telephone.

Members of the public are asked to keep their telephones muted to eliminate background noises. To avoid disrupting the meeting, please refrain from placing the call on hold if doing so will trigger recorded music or other sound. From time to time, the presiding Chair may solicit comments from the public.

MEETING SCHEDULE

	Time *
Sunday, April 14, 2013	
1. Operations & Regulations Committee.	2:30 p.m.
2. Governance & Performance Review Committee.	
Monday, April 15, 2013	
1. Institutional Advancement Committee.	9:00 a.m.
2. Promotion & Provision for the Delivery of Legal Services Committee.	
3. Audit Committee.	
4. Finance Committee.	
Tuesday, April 16, 2013	
1. Board of Directors	9:00 a.m.

STATUS OF MEETING: Open, except as noted below.

Board of Directors—Open, except that, upon a vote of the Board of Directors, a portion of the meeting may be closed to the public to hear briefings by management and LSC's Inspector General, and to consider and act on the General Counsel's report on potential and pending litigation involving LSC.**

Institutional Advancement Committee—Open, except that, upon a vote of the Board of Directors, the meeting may be closed to the public to discuss prospective funders for LSC's development activities and prospective members for an honorary auxiliary group.

Audit Committee—Open, except that a portion of the meeting may be closed to the public to hear a *briefing* on insurance coverage.**

A verbatim written transcript will be made of the closed session of the Board and Institutional Advancement Committee meetings. The transcript of any portions of the closed session falling within the relevant provisions of the Government in the Sunshine Act, 5 U.S.C. § 552b(c)(6), (9) and (10), and the corresponding provisions of the Legal Services Corporation's implementing regulations, 45 CFR 1622.5(e), (g) and (h), will not be available for public inspection. A copy of the General Counsel's Certification that, in his opinion, the closing is authorized by law will be available upon request.

MATTERS TO BE CONSIDERED:

April 14, 2013

Operations & Regulations Committee

1. Approval of agenda
2. Approval of minutes of the Committee's meeting on January 25, 2013
3. Consider and act on the proposed Request for Information regarding representation of criminal defendants in tribal courts
   ▪ Kara Ward, Assistant General Counsel
4. Consider and act on the proposed Notice of Rulemaking Workshop regarding potential changes to the private attorney involvement rule in a manner responsive to the recommendations of the Pro Bono Task Force Report
   ▪ Kara Ward, Assistant General Counsel
5. Consider and act on initiating rulemaking to conform Part 1626 (Restrictions on Assistance to Aliens) with existing statutory authorizations
   ▪ Kara Ward, Assistant General Counsel
6. Public comment
7. Consider and act on other business
8. Consider and act on adjournment of meeting

Governance & Performance Review Committee

1. Approval of agenda
2. Approval of minutes of the Committee's meeting of January 26, 2013
3. Staff reports on
   • Staff report on progress in implementing GAO recommendations
4. Public Welfare Foundation Grant Materials
5. Report on Public Welfare Foundation grant and LSC research agenda
   • Jim Sandman, President
6. Report on evaluation of LSC Comptroller
7. Consider and act on other business
8. Public comment
9. Consider and act on motion to adjourn meeting

April 15, 2013

Institutional Advancement Committee

Open Session

1. Approval of agenda
2. Approval of minutes of the Committee's open session meeting of January 26, 2013
3. Discussion of plans for LSC's 40th anniversary celebration
4. Discussion of fundraising objectives
5. Public comment
6. Consider and act on other business

Closed Session

1. Approval of minutes of the Committee's closed session meeting of January 26, 2013
2. Approval of minutes of the Committee's closed session meeting of February 13, 2013
3. Approval of minutes of the Committee's closed session meeting of February 26, 2013
4. Approval of minutes of the Committee's closed session meeting of March 12, 2013
5. Discussion of prospective funders for LSC's development activities
6. Discussion of prospective members of the honorary auxiliary group
7. Consider and act on adjournment of meeting

Promotion & Provision for the Delivery of Legal Services Committee

1. Approval of Agenda
2. Approval of minutes of the Committee's meeting of January 25, 2013
3. Discussion of Committee's evaluations for 2012 and the Committee's goals for 2013
4. Presentation of the District of Columbia Neighborhood Legal Services Program
5. Panel Presentation on using assessments of legal needs of the low income population to set priorities for the work of legal services programs
6. Public comment
7. Consider and act on other business
8. Consider and act on motion to adjourn the meeting

Audit Committee

Open Session

1. Approval of agenda
2. Approval of minutes from the January 26, 2013 meeting
3. Quarterly review of 403(b) plan performance
4. Briefing by Inspector General
   • Jeff Schanz, Inspector General
5. Reports on audits and implementation of findings and recommendations made by the OIG and external auditors, and compliance with the restrictions of 45 CFR Part 1612

* Please note that all times in this notice are in the *Eastern Daylight Time.*

** Any portion of the closed session solely of briefings does not fall within the Sunshine Act's definitkion of the term ''meeting'' and, therefore, the requirements of the Sunshine Act do not apply to such portion of the closed session. 5 U.S.C. 552(a)(2) and (b). *See also* 45 CFR 1622 and 1622.3.

• Jim Sandman, President
• David Richardson, Treasurer/Comptroller
• Lora Rath, Director, Office of Compliance and Enforcement
6. Discussion regarding future Management process reports
7. Public comment
8. Consider and act on other business
9. Consider and act on motion to adjourn the meeting

Closed Session Briefing

10. Briefing on Insurance Coverage
• David Richardson, Treasurer/Comptroller

Finance Committee

1. Approval of agenda
2. Approval of the minutes from the January 26, 2013 meeting
3. Consider and act on the Consolidated Operating Budget for FY 2013 and recommend Resolution 2013–XXX to the full Board
• David Richardson, Treasurer/Comptroller
4. Presentation on LSC's Financial Report for the five-month period ending February 28, 2013
• David Richardson, Treasurer/Comptroller
5. Report on FY 2013 appropriations
• Carol Bergman, Director, Office of Government Relations and Public Affairs
6. Report on FY 2014 appropriations process
• Carol Bergman, Director, Office of Government Relations and Public Affairs
7. Discussion with Management regarding process and timetable for FY 2015 budget ''mark''
8. Public comment
9. Consider and act on other business
10. Consider and act on motion to adjourn the meeting

April 16, 2013

Board of Directors

Open Session

1. Pledge of Allegiance
2. Approval of agenda
3. Approval of minutes of the Board's meeting of January 26, 2013
4. Chairman's Report
5. Members' Reports
6. President's Report
7. Inspector General's Report
8. Consider and act on the report of the Promotion and Provision for the Delivery of Legal Services Committee
9. Consider and act on the report of the Finance Committee
10. Consider and act on the report of the Audit Committee
11. Consider and act on the report of the Operations and Regulations Committee
12. Consider and act on the report of the Governance and Performance Review Committee
13. Consider and act on the report of the Institutional Advancement Committee
14. Consider and act on Resolution 2013–XXX in recognition of distinguished service by Victor M. Fortuno
15. Public comment
16. Consider and act on other business
17. Consider and act on whether to authorize an executive session of the Board to address items listed below, under Closed Session

Closed Session

18. Approval of minutes of the Board's closed session meeting of January 26, 2013
19. Briefing by Management
20. Briefing by the Inspector General
21. Consider and act on General Counsel's report on potential and pending litigation involving LSC
22. Consider and act on motion to adjourn meeting

CONTACT PERSON FOR INFORMATION: Katherine Ward, Executive Assistant to the Vice President & General Counsel, at (202) 295–1628. Questions may be sent by electronic mail to *FR_NOTICE_QUESTIONS@lsc.gov.*

NON-CONFIDENTIAL MEETING MATERIALS: Non-confidential meeting materials will be made available in electronic format at least 24 hours in advance of the meeting on the LSC Web site, at *http://www.lsc.gov/board-directors/meetings/board-meeting-notices/non-confidential-materials-be-considered-open-session.*

ACCESSIBILITY: LSC complies with the Americans with Disabilities Act and Section 504 of the 1973 Rehabilitation Act. Upon request, meeting notices and materials will be made available in alternative formats to accommodate individuals with disabilities. Individuals who need other accommodations due to disability in order to attend the meeting in person or telephonically should contact Katherine Ward, at (202) 295–1500 or *FR_NOTICE_QUESTIONS@lsc.gov,* at least 2 business days in advance of the meeting. If a request is made without advance notice, LSC will make every effort to accommodate the request but cannot guarantee that all requests can be fulfilled.

Dated: April 5, 2013.

Victor M. Fortuno,

Vice President & General Counsel.

[FR Doc. 2013–08431 Filed 4–8–13; 11:15 am]

BILLING CODE 7050–01–P

NATIONAL AERONAUTICS AND SPACE ADMINISTRATION

[Notice: 13–048]

NASA Advisory Council; Science Committee; Planetary Protection Subcommittee; Meeting

AGENCY: National Aeronautics and Space Administration.

ACTION: Notice of meeting.

SUMMARY: In accordance with the Federal Advisory Committee Act, Public Law 92–463, as amended, the National Aeronautics and Space Administration (NASA) announces a meeting of the Planetary Protection Subcommittee of the NASA Advisory Council (NAC). This Subcommittee reports to the Science Committee of the NAC. The meeting will be held for the purpose of soliciting, from the scientific community and other persons scientific and technical information relevant to program planning.

DATES: Monday, April 29, 2013, 9:00 a.m. to 5:00 p.m., and Tuesday, April 30, 2013, 8:30 a.m. to 4:30 p.m., Local Time.

ADDRESSES: NASA Headquarters, 300 E Street SW., Room 9H40 (April 29), Room 1Q39 (April 30, 9:00 a.m. to 2:00 p.m.), and Room 6H41A (April 30, 2:00 p.m. to 4:30 p.m.), Washington, DC 20546.

FOR FURTHER INFORMATION CONTACT: Ms. Marian Norris, Science Mission Directorate, NASA Headquarters, Washington, DC 20546, (202) 358–4452, fax (202) 358–3094, or *mnorris@nasa.gov.*

SUPPLEMENTARY INFORMATION: The meeting will be open to the public up to the capacity of the room. The meeting will also be available telephonically and by WebEx. Any interested person may call the USA toll free conference call number 800–857–7040, pass code PPS, to participate in this meeting by telephone. The WebEx link is *https://nasa.webex.com/,* the meeting number on April 29 is 995 580 265, password pps04292013!; the meeting number on April 30 is 994 280 426, password pps04302013!. The agenda for the meeting includes the following topics:

—Update on NASA Planetary Protection Activities
—Mars 2020 Planning
—Human Exploration Planetary Protection Plan

It is imperative that the meeting be held on these dates to accommodate the scheduling priorities of the key participants. Attendees will be requested to sign a register and to

comply with NASA security requirements, including the presentation of a valid picture ID to Security before access to NASA Headquarters. Foreign nationals attending this meeting will be required to provide a copy of their passport and visa in addition to providing the following information no less than 10 working days prior to the meeting: full name; gender; date/place of birth; citizenship; visa information (number, type, expiration date); passport information (number, country, expiration date); employer/affiliation information (name of institution, address, country, telephone); title/position of attendee; and home address to Marian Norris via email at *mnorris@nasa.gov* or by fax at (202) 358–3094. U.S. citizens and Permanent Residents (green card holders) are requested to submit their name and affiliation 3 working days prior to the meeting to Marian Norris.

Patricia D. Rausch,

Advisory Committee Management Officer, National Aeronautics and Space Administration.

[FR Doc. 2013–08360 Filed 4–9–13; 8:45 am]

BILLING CODE 7510–13–P

POSTAL SERVICE

Sunshine Act Meeting; Board of Governors; Board Votes to Close April 4, 2013, Meeting

By telephone vote on April 4, 2013, members of the Board of Governors of the United States Postal Service met and voted unanimously to close to public observation its meeting held in Washington, DC, via teleconference. The Board determined that no earlier public notice was possible.

MATTERS CONSIDERED:

1. Strategic Issues.
2. Personnel Matter.

GENERAL COUNSEL CERTIFICATION: The General Counsel of the United States Postal Service has certified that the meeting was properly closed under the Government in the Sunshine Act.

CONTACT PERSON FOR MORE INFORMATION: Requests for information about the meeting should be addressed to the Secretary of the Board, Julie S. Moore, at (202) 268–4800.

Julie S. Moore,

Secretary.

[FR Doc. 2013–08426 Filed 4–8–13; 11:15 am]

BILLING CODE 7710–12–P

SECURITIES AND EXCHANGE COMMISSION

[Investment Company Act Release No. 30449; 812–14054]

TSC Distributors LLC and TSC UITS; Notice of Application

April 4, 2013.

AGENCY: Securities and Exchange Commission (''Commission'').

ACTION: Notice of an application under (a) section 6(c) of the Investment Company Act of 1940 (''Act'') for an exemption from sections 2(a)(32), 2(a)(35), 14(a), 19(b), 22(d) and 26(a)(2)(C) of the Act and rules 19b–1 and rule 22c–1 thereunder and (b) sections 11(a) and 11(c) of the Act for approval of certain exchange and rollover privileges.

APPLICANTS: TSC Distributors LLC (''TSC'') and TSC UITS (the ''TSC UITS'').[1]

SUMMARY OF APPLICATION: Applicants request an order to permit certain unit investment trusts to: (a) Impose sales charges on a deferred basis and waive the deferred sales charge in certain cases; (b) offer unitholders certain exchange and rollover options; (c) publicly offer units without requiring the Depositor to take for its own account $100,000 worth of units; and (d) distribute capital gains resulting from the sale of portfolio securities within a reasonable time after receipt.

DATES: *Filing Dates:* The application was filed on July 6, 2012, and amended on April 2, 2013.

HEARING OR NOTIFICATION OF HEARING: An order granting the application will be issued unless the Commission orders a hearing. Interested persons may request a hearing by writing to the Commission's Secretary and serving applicants with a copy of the request, personally or by mail. Hearing requests should be received by the Commission by 5:30 p.m. on April 29, 2013, and should be accompanied by proof of service on the applicants, in the form of an affidavit, or, for lawyers, a certificate of service. Hearing requests should state the nature of the writer's interest, the reason for the request, and the issues contested. Persons who wish to be notified of a hearing may request notification by writing to the Commission's Secretary.

ADDRESSES: Elizabeth M. Murphy, Secretary, Securities and Exchange Commission, 100 F Street NE., Washington, DC 20549–1090; Applicants, 10 High Street, Suite 70, Boston, MA 02110.

FOR FURTHER INFORMATION CONTACT: Jean E. Minarick, Senior Counsel, at (202) 551–6811, or Daniele Marchesani, Branch Chief, at (202) 551–6821 (Office of Investment Company Regulation, Division of Investment Management).

SUPPLEMENTARY INFORMATION: The following is a summary of the application. The complete application may be obtained via the Commission's Web site by searching for the file number, or an applicant using the Company name box, at *http://www.sec.gov/search/search.htm* or by calling (202) 551–8090.

Applicants' Representations

1. TSC UITS is a unit investment trust (''UIT'') that is registered under the Act. Any future Trust will be a registered UIT. TSC, a Delaware limited liability company, is registered under the Securities Exchange Act of 1934 as a broker-dealer and is the Depositor of the TSC UITS. Each Series will be created by a trust indenture between the Depositor and a banking institution or trust company as trustee (''Trustee'').

2. The Depositor acquires a portfolio of securities, which it deposits with the Trustee in exchange for certificates representing units of fractional undivided interest in the Series' portfolio (''Units''). The Units are offered to the public through the Depositor and dealers at a price which, during the initial offering period, is based upon the aggregate market value of the underlying securities, or, the aggregate offering side evaluation of the underlying securities if the underlying securities are not listed on a securities exchange, plus a front-end sales charge, a deferred sales charge or both. The maximum sales charge may be reduced in compliance with rule 22d–1 under the Act in certain circumstances, which are disclosed in the Series' prospectus.

3. The Depositor may, but is not legally obligated to, maintain a secondary market for Units of an outstanding Series. Other broker-dealers may or may not maintain a secondary market for Units of a Series. If a secondary market is maintained, investors will be able to purchase Units on the secondary market at the current public offering price plus a front-end sales charge. If such a market is not

[1] Applicants also request relief for future unit investment trusts (collectively, with the TSC UITS, the ''Trusts'') and series of the Trusts (''Series'') that are sponsored by TSC or any entity controlling, controlled by or under common control with TSC (together with TSC, the ''Depositors''). Any future Trust and Series that relies on the requested order will comply with the terms and conditions of the application. All existing entities that currently intend to rely on the requested order are named as applicants.

maintained at any time for any Series, holders of the Units (''Unitholders'') of that Series may redeem their Units through the Trustee.

A. Deferred Sales Charge and Waiver of Deferred Sales Charge Under Certain Circumstances

1. Applicants request an order to the extent necessary to permit one or more Series to impose a sales charge on a deferred basis (''DSC''). For each Series, the Depositor would set a maximum sales charge per Unit, a portion of which may be collected ''up front'' (i.e., at the time an investor purchases the Units). The DSC would be collected subsequently in installments (''Installment Payments'') as described in the application. The Depositor would not add any amount for interest or any similar or related charge to adjust for such deferral.

2. When a Unitholder redeems or sells Units, the Depositor intends to deduct any unpaid DSC from the redemption or sale proceeds. When calculating the amount due, the Depositor will assume that Units on which the DSC has been paid in full are redeemed or sold first. With respect to Units on which the DSC has not been paid in full, the Depositor will assume that the Units held for the longest time are redeemed or sold first. Applicants represent that the DSC collected at the time of redemption or sale, together with the Installment Payments and any amount collected up front, will not exceed the maximum sales charge per Unit. Under certain circumstances, the Depositor may waive the collection of any unpaid DSC in connection with redemptions or sales of Units. These circumstances will be disclosed in the prospectus for the relevant Series and implemented in accordance with rule 22d–1 under the Act.

3. Each Series offering Units subject to a DSC will state the maximum charge per Unit in its prospectus. In addition, the prospectus for such Series will include the table required by Form N–1A (modified as appropriate to reflect the difference between UITs and open-end management investment companies) and a schedule setting forth the number and date of each Installment Payment, along with the duration of the collection period. The prospectus also will disclose that portfolio securities may be sold to pay the DSC if distribution income is insufficient and that securities will be sold pro rata, if practicable, otherwise a specific security will be designated for sale.

B. Exchange Option and Rollover Option

1. Applicants request an order to the extent necessary to permit Unitholders of a Series to exchange their Units for Units of another Series (''Exchange Option'') and Unitholders of a Series that is terminating to exchange their Units for Units of a new Series of the same type (''Rollover Option''). The Exchange Option and Rollover Option would apply to all exchanges of Units sold with a front-end sales charge, a DSC or both.

2. A Unitholder who purchases Units under the Exchange Option or Rollover Option would pay a lower sales charge than that which would be paid for the Units by a new investor. The reduced sales charge will be reasonably related to the expenses incurred in connection with the administration of the DSC program, which may include an amount that will fairly and adequately compensate the Depositor and participating underwriters and brokers for their services in providing the DSC program.

Applicants' Legal Analysis

A. DSC and Waiver of DSC

1. Section 4(2) of the Act defines a ''unit investment trust'' as an investment company that issues only redeemable securities. Section 2(a)(32) of the Act defines a ''redeemable security'' as a security that, upon its presentation to the issuer, entitles the holder to receive approximately his or her proportionate share of the issuer's current net assets or the cash equivalent of those assets. Rule 22c–1 under the Act requires that the price of a redeemable security issued by a registered investment company for purposes of sale, redemption or repurchase be based on the security's current net asset value (''NAV''). Because the collection of any unpaid DSC may cause a redeeming Unitholder to receive an amount less than the NAV of the redeemed Units, applicants request relief from section 2(a)(32) and rule 22c–1.

2. Section 22(d) of the Act and rule 22d–1 under the Act require a registered investment company and its principal underwriter and dealers to sell securities only at the current public offering price described in the investment company's prospectus, with the exception of sales of redeemable securities at prices that reflect scheduled variations in the sales load. Section 2(a)(35) of the Act defines the term ''sales load'' as the difference between the sales price and the portion of the proceeds invested by the depositor or trustee. Applicants request relief from section 2(a)(35) and section 22(d) to permit waivers, deferrals or other scheduled variations of the sales load.

3. Under section 6(c) of the Act, the Commission may exempt classes of transactions, if and to the extent that such exemption is necessary or appropriate in the public interest and consistent with the protection of investors and the purposes fairly intended by the policy and provisions of the Act. Applicants state that their proposal meets the standards of section 6(c). Applicants state that the provisions of section 22(d) are intended to prevent (a) Riskless trading in investment company securities due to backward pricing, (b) disruption of orderly distribution by dealers selling shares at a discount, and (c) discrimination among investors resulting from different prices charged to different investors. Applicants assert that the proposed DSC program will present none of these abuses. Applicants further state that all scheduled variations in the sales load will be disclosed in the prospectus of each Series and applied uniformly to all investors, and that applicants will comply with all the conditions set forth in rule 22d–1.

4. Section 26(a)(2)(C) of the Act, in relevant part, prohibits a trustee or custodian of a UIT from collecting from the trust as an expense any payment to the trust's depositor or principal underwriter. Because the Trustee's payment of the DSC to the Depositor may be deemed to be an expense under section 26(a)(2)(C), applicants request relief under section 6(c) from section 26(a)(2)(C) to the extent necessary to permit the Trustee to collect Installment Payments and disburse them to the Depositor. Applicants submit that the relief is appropriate because the DSC is more properly characterized as a sales load.

B. Exchange Option and Rollover Option

Sections 11(a) and 11(c) of the Act prohibit any offer of exchange by a UIT for the securities of another investment company unless the terms of the offer have been approved in advance by the Commission. Applicants request an order under sections 11(a) and 11(c) for Commission approval of the Exchange Option and the Rollover Option.

C. Net Worth Requirement

1. Section 14(a) of the Act requires that a registered investment company have $100,000 of net worth prior to making a public offering. Applicants state that each Series will comply with

this requirement because the Depositor will deposit more than $100,000 of securities. Applicants assert, however, that the Commission has interpreted section 14(a) as requiring that the initial capital investment in an investment company be made without any intention to dispose of the investment. Applicants state that, under this interpretation, a Series would not satisfy section 14(a) because of the Depositor's intention to sell all the Units of the Series.

2. Rule 14a–3 under the Act exempts UITs from section 14(a) if certain conditions are met, one of which is that the UIT invest only in ''eligible trust securities,'' as defined in the rule. Applicants state that they may not rely on rule 14a–3 because certain Series (collectively, ''Equity Series'') will invest all or a portion of their assets in equity securities or shares of registered investment companies which do not satisfy the definition of eligible trust securities.

3. Applicants request an exemption under section 6(c) of the Act to the extent necessary to exempt the Equity Series from the net worth requirement in section 14(a). Applicants state that the Series and the Depositor will comply in all respects with the requirements of rule 14a–3, except that the Equity Series will not restrict their portfolio investments to ''eligible trust securities.''

D. Capital Gains Distribution

1. Section 19(b) of the Act and rule 19b–1 under the Act provide that, except under limited circumstances, no registered investment company may distribute long-term gains more than once every twelve months. Rule 19b–1(c), under certain circumstances, exempts a UIT investing in eligible trust securities (as defined in rule 14a–3) from the requirements of rule 19b–1. Because the Equity Series do not limit their investments to eligible trust securities, however, the Equity Series will not qualify for the exemption in paragraph (c) of rule 19b–1. Applicants therefore request an exemption under section 6(c) from section 19(b) and rule 19b–1 to the extent necessary to permit capital gains earned in connection with the sale of portfolio securities to be distributed to Unitholders along with the Equity Series' regular distributions. In all other respects, applicants will comply with section 19(b) and rule 19b–1.

2. Applicants state that their proposal meets the standards of section 6(c). Applicants assert that any sale of portfolio securities would be triggered by the need to meet Trust expenses, Installment Payments, or by redemption requests, events over which the Depositor and the Equity Series do not have control. Applicants further state that, because principal distributions must be clearly indicated in accompanying reports to Unitholders as a return of principal and will be relatively small in comparison to normal dividend distributions, there is little danger of confusion from failure to differentiate among distributions.

Applicants' Conditions

Applicants agree that any order granting the requested relief will be subject to the following conditions:

A. DSC Relief and Exchange and Rollover Options

1. Whenever the Exchange Option or the Rollover Option is to be terminated or its terms are to be amended materially, any holder of a security subject to that privilege will be given prominent notice of the impending termination or amendment at least 60 days prior to the date of termination or the effective date of the amendment, provided that: (a) no such notice need be given if the only material effect of an amendment is to reduce or eliminate the sales charge payable at the time of an exchange, to add one or more new Series eligible for the Exchange Option or the Rollover Option, or to delete a Series which has terminated; and (b) no notice need be given if, under extraordinary circumstances, either (i) there is a suspension of the redemption of Units of the Series under section 22(e) of the Act and the rules and regulations promulgated thereunder, or (ii) a Series temporarily delays or ceases the sale of its Units because it is unable to invest amounts effectively in accordance with applicable investment objectives, policies and restrictions.

2. An investor who purchases Units under the Exchange Option or the Rollover Option will pay a lower sales charge than that which would be paid for the Units by a new investor.

3. The prospectus of each Series offering exchanges or rollovers and any sales literature or advertising that mentions the existence of the Exchange Option or Rollover Option will disclose that the Exchange Option and the Rollover Option are subject to modification, termination or suspension without notice, except in certain limited cases.

4. Any DSC imposed on a Series' Units will comply with the requirements of subparagraphs (1), (2) and (3) of rule 6c–10(a) under the Act.

5. Each Series offering Units subject to a DSC will include in its prospectus the disclosure required by Form N–1A relating to deferred sales charges (modified as appropriate to reflect the differences between UITs and open-end management investment companies) and a schedule setting forth the number and date of each Installment Payment.

B. Net Worth Requirement

Applicants will comply in all respects with the requirements of rule 14a–3 under the Act, except that the Equity Series will not restrict their portfolio investments to ''eligible trust securities.''

For the Commission, by the Division of Investment Management, under delegated authority.

Kevin M. O'Neill,

Deputy Secretary.

[FR Doc. 2013–08319 Filed 4–9–13; 8:45 am]

BILLING CODE 8011–01–P

SECURITIES AND EXCHANGE COMMISSION

[Investment Company Act Release No. 30448; File No. 812–13880]

Royce Value Trust, Inc., *et al.;* Notice of Application

April 4, 2013.

AGENCY: Securities and Exchange Commission (''Commission'').

ACTION: Notice of an application for an order under section 12(d)(1)(J) of the Investment Company Act 1940 (the ''Act'') granting an exemption from sections 12(d)(1)(A) and 12(d)(1)(C) of the Act, under section 17(b) of the Act granting an exemption from section 17(a) of the Act, and under section 17(d) of the Act and rule 17d–1 thereunder permitting certain joint transactions.

APPLICANTS: Royce Value Trust, Inc. (''Value Trust''), Royce Global Value Trust, Inc. (''Global Trust'') (each a ''Fund'' and together, the ''Funds'') and Royce & Associates, LLC (the ''Adviser'').

SUMMARY OF APPLICATION: Applicants seek an order to permit Value Trust to transfer a segment of its assets to Global Trust, a newly formed, wholly-owned subsidiary that is a registered closed-end investment company, and to distribute the shares of Global Trust common stock to Value Trust's common stockholders.

FILING DATES: The application was filed on March 17, 2011 and amended on August 16, 2011, May 22, 2012, and March 6, 2013.

HEARING OR NOTIFICATION OF HEARING: An order granting the application will be issued unless the Commission orders a hearing. Interested persons may request

a hearing by writing to the Commission's Secretary and serving applicants with a copy of the request, personally or by mail. Hearing requests should be received by the Commission by 5:30 p.m. on April 29, 2013 and should be accompanied by proof of service on the applicants, in the form of an affidavit, or, for lawyers, a certificate of service. Hearing requests should state the nature of the writer's interest, the reason for the request, and the issues contested. Persons who wish to be notified of a hearing may request notification by writing to the Commission's Secretary.

ADDRESSES: Elizabeth M. Murphy, Secretary, U.S. Securities and Exchange Commission, 100 F Street NE., Washington, DC 20549–1090; Applicants: c/o Frank P. Bruno, Esq., Sidley Austin LLP, 787 Seventh Avenue, New York, New York 10019–6018.

FOR FURTHER INFORMATION CONTACT: Laura J. Riegel, Senior Counsel, at (202) 551–6873 or Mary Kay Frech, Branch Chief, at (202) 551–6821 (Division of Investment Management, Exemptive Applications Office).

SUPPLEMENTARY INFORMATION: The following is a summary of the application. The complete application may be obtained via the Commission's Web site by searching for the file number, or an applicant using the Company name box, at *http://www.sec.gov/search/search.htm* or by calling (202) 551–8090.

Applicants' Representations

1. Value Trust, a Maryland corporation, is registered under the Act as a diversified closed-end management investment company. Value Trust seeks long-term growth of capital primarily through investment in the equity securities of small- and micro-cap companies. Value Trust has a non-fundamental investment policy that limits its investment in securities of issuers headquartered outside the United States to 25% of the Fund's assets.

2. Global Trust was incorporated in Maryland on February 14, 2011 and filed a notification of registration on Form N–8A on March 11, 2011 to register under the Act as a diversified closed-end management investment company. Global Trust filed a registration statement under the Securities Act of 1933 (the ''1933 Act'') on Form N–14 on March 16, 2011 (the ''Proxy Statement/Prospectus'') and filed a registration statement on Form N–2 on June 8, 2011. Application will be made to list Global Trust's common stock for trading on the New York Stock Exchange. Global Trust seeks long-term growth of capital by investing a significant portion of its assets in the equity securities of micro-cap, small-cap, and/or mid-cap companies. Unlike Value Trust, Global Trust may invest without limitation in securities of foreign issuers and, under normal market circumstances, will invest at least 65% of its assets in equity securities of companies located outside of the United States.

3. The Adviser, a Delaware limited liability company, is registered under the Investment Advisers Act of 1940 and serves as the investment adviser to the Funds. The investment advisory fee structures for Value Trust and Global Trust will be different. Value Trust's advisory fee consists of a base fee and a fulcrum fee. The base advisory fee of Value Trust is a monthly fee equal to 1/12 of 1% (1% on an annualized basis) of the average of Value Trust's month-end net assets, including the liquidation value of any preferred stock issued and outstanding, for the rolling 60-month period ending with such month.[1] The fulcrum fee, determined by fund performance, causes Value Trust's annual advisory fee to adjust up to .50% either above or below the base advisory fee.[2] In contrast to Value Trust, Global Trust will pay the Adviser a fee at an annual rate of 1.25% of Global Trust's average daily net assets, including the liquidation value of any preferred stock issued and outstanding, which reflects an advisory fee that is 0.25% higher than the base advisory fee paid by Value Trust to the Adviser. For this reason, the annual advisory fee for Global Trust may be higher or lower than that of Value Trust.

4. The board of directors of Value Trust consists of eight directors who are also directors on the eight member board of directors of Global Trust (each such board of directors, a ''Board'' and collectively, the ''Boards''). Six of the eight directors on each Board are not ''interested persons,'' as defined in section 2(a)(19) of the Act (the ''Independent Directors''). All of the principal officers of Value Trust hold the same offices with Global Trust.

5. The Board of Value Trust has approved, subject to the issuance of the requested relief and subsequent stockholder approval, the contribution of a segment of Value Trust's assets having a value of approximately $100 million to Global Trust, in exchange for shares of Global Trust common stock. It is anticipated that the contributed assets will consist largely or exclusively of cash, short-term fixed income instruments, and/or unappreciated common stock and unappreciated preferred stock whose value at the time of the Transaction (as defined below) are less than or equal to their cost basis for tax purposes (together, such unappreciated common stock and unappreciated preferred stock are ''Unappreciated Equity Securities''). All the shares of common stock of Global Trust will then be distributed by Value Trust to its common stockholders at a rate of one (1) share of Global Trust common stock for every seven (7) shares held of Value Trust common stock.[3] The contribution of the Value Trust assets to Global Trust and the subsequent distribution of shares of Global Trust common stock to Value Trust common stockholders are referred to as the ''Transaction.''

6. The Proxy Statement/Prospectus of the Funds will be used, following the issuance of the requested relief, to solicit approval of the Value Trust stockholders of the Transaction. Prior to the effectiveness of the Proxy Statement/Prospectus under the 1933 Act, Value Trust will purchase approximately 10,000 shares of Global Trust's shares of common stock, par value $0.001, in consideration of Value Trust's contribution to Global Trust of at least $100,000 initial net asset value (the ''Seed Capital Shares''), in order to satisfy the requirements of section 14(a) of the Act. Value Trust represents that the Seed Capital Shares will be sold only pursuant to a registration statement under the 1933 Act or an applicable exemption from registration under the 1933 Act. Applicants intend that the Seed Capital Shares will be included in the distribution of Global Trust's shares of common stock to the common stockholders of Value Trust.

7. Applicants represent that Value Trust's activities in the Transaction may be deemed to be underwriting shares of Global Trust's common stock. Value Trust has a fundamental investment

[1] The base fee for each month is increased or decreased at the rate of 1/12 of .05% for each percentage point that the investment performance of Value Trust exceeds, or is exceeded by, the percentage change in the investment record of the S&P 600 SmallCap Index for the performance period by more than two percentage points.

[2] The Adviser is not entitled to receive any fee for any month when the investment performance of Value Trust for the rolling 36-month period ending with such month is negative.

[3] No fractional shares of Global Trust common stock will be issued as part of the distribution. The fractional shares to which holders of Value Trust common stock would otherwise be entitled will be aggregated and an attempt to sell them in the open market will be made at then-prevailing prices on behalf of such holders, and such holders will receive instead a cash payment in the amount of their pro rata share of the total sales proceeds.

restriction that it will not underwrite the securities of other issuers, or invest in restricted securities unless such securities are redeemable shares issued by money market funds registered under the Act (the ''Underwriting Restriction''). Accordingly, Value Trust's activities in the Transaction may be deemed to be in violation of the Underwriting Restriction.

8. Applicants state that Value Trust's Underwriting Restriction cannot be changed without the affirmative vote of the majority of the outstanding voting securities of Value Trust. Applicants undertake that they will not rely on the requested order until the amendment to the Underwriting Restriction [4] is approved by the affirmative vote of the holders of a majority of Value Trust's outstanding voting securities.

9. The Board of Value Trust, including the Independent Directors, concluded that the Transaction will result in the following benefits to Value Trust stockholders: (a) Stockholders will receive shares of an investment company with a different risk-return profile than Value Trust; (b) stockholders will acquire the shares of Global Trust common stock at a much lower transaction cost than is typically the case for a newly-organized closed-end equity fund since there will be no underwriting discounts or commissions; and (c) stockholders will be able to seek capital appreciation opportunities presented by Global Trust's ability to invest at least 65% of its net assets in non-U.S. securities.

10. Shortly before the date of the Transaction, the Adviser will review with the Boards of Global Trust and Value Trust, including the Independent Directors: (a) the Unappreciated Securities, if any, it recommends contributing in the Transaction; (b) the methodology used by the Adviser in selecting Unappreciated Equity Securities to be contributed to Global Trust and those to be retained by Value Trust; (c) the cost basis and current fair market value of each Unappreciated Equity Security to be contributed; (d) the aggregate amount of Unappreciated Equity Securities to be contributed and the percentage of Value Trust's entire portfolio and of its unappreciated common stock and preferred stock that the Unappreciated Equity Securities to be contributed constitute; and (e) the percentage of Global Trust's portfolio that the Unappreciated Equity Securities will constitute.[5] The Boards of Global Trust and Value Trust, including a majority of the Independent Directors, will approve the contribution of the Unappreciated Equity Securities by Value Trust to Global Trust, including the methodology of selecting Unappreciated Equity Securities to be contributed, and the deliberations of the Boards will be set forth in the minutes of the Funds.

11. Global Trust has been advised by counsel that the distribution of shares of Global Trust to the common stockholders of Value Trust likely will be a taxable event for Value Trust stockholders to some extent and a taxable event for Value Trust, but only to the extent that the value of Global Trust shares distributed exceeds Value Trust's cost of such shares. Specifically, the value of Global Trust shares will exceed Value Trust's cost of those shares only to the extent that the value of the short-term fixed income instruments and Unappreciated Equity Securities, if any, contributed to Global Trust exceeds Value Trust's cost of such short-term fixed income instruments and Unappreciated Equity Securities. Applicants state that no significant excess is expected. Further, the Transaction is not expected to increase significantly the total amount of taxable distributions received by Value Trust common stockholders for the year in which the Transaction is consummated because Value Trust distributes to stockholders each year substantially all of its taxable income and accordingly, any taxable income included in the distribution of Global Trust shares would be distributed at some point during the year in any event. The Board of Value Trust, including all of the Independent Directors, has considered the tax consequences of the Transaction and has determined that the benefits of the Transaction outweigh any adverse tax consequences to Value Trust and its common stockholders, particularly because such adverse tax consequences are expected to be minimal.

12. The costs of organizing Global Trust and effecting the distribution of Global Trust's shares to Value Trust's common stockholders, including the fees and expenses of counsel and accountants and printing, listing, and registration fees, the costs of soliciting Value Trust's stockholders' approval of the Transaction, and the costs incurred in connection with the application for relief, are estimated to be approximately $700,000, and will be borne by the Adviser. Global Trust will incur operating expenses on an ongoing basis, including investment advisory fees, and legal, auditing, transfer agency, and custodian expenses that, when aggregated with the fees payable by Value Trust for similar services after the distribution, will likely exceed the fees currently payable by Value Trust for those services. It is not expected that the Transaction will have a significant effect on the annual expenses of Value Trust as a percentage of its assets.

Applicants' Legal Analysis

1. Applicants request an order under section 12(d)(1)(J) of the Act granting an exemption from sections 12(d)(1)(A) and 12(d)(1)(C) of the Act, under section 17(b) of the Act granting an exemption from section 17(a) of the Act and under section 17(d) of the Act and rule17d–1 thereunder permitting certain joint transactions.

2. Section 12(d)(1)(A) of the Act prohibits a registered investment company from acquiring shares of an investment company if the securities represent more than 3% of the total outstanding voting stock of the acquired company, more than 5% of the total assets of the acquiring company, or, together with the securities of any other investment companies, more than 10% of the total assets of the acquiring company. Section 12(d)(1)(C) of the Act prohibits an investment company from acquiring any security issued by a registered closed-end investment company if such acquisition would result in the acquiring company, any other investment companies having the same investment adviser, and companies controlled by such investment companies, collectively, owning more than 10% of the outstanding voting stock of the registered closed-end investment company.

3. Applicants state that the proposed Transaction may be viewed as violating sections 12(d)(1)(A) and 12(d)(1)(C). At the time of the purchase of Seed Capital Shares and at the time of the transfer of Value Trust's assets in return for shares of Global Trust common stock, Value Trust will acquire 100% of the voting stock of Global Trust, a closed-end investment company, and the value of Value Trust's holdings of Global Trust common stock will exceed 5% of Value Trust's assets for a momentary period.

4. Section 12(d)(1)(J) of the Act provides that the Commission may exempt any person, security, or

[4] Value Trust intends to seek stockholder approval to amend the Underwriting Restriction to state that Value Trust may not underwrite the securities of other issuers, except insofar as the Fund may be deemed an underwriter under the 1933 Act in selling portfolio securities and in connection with mergers, acquisitions, spin-off and other reorganization transactions involving the Fund.

[5] In selecting Unappreciated Equity Securities to be contributed to Global Trust in the Transaction, the Adviser will select only Unappreciated Equity Securities that are consistent with Global Trust's investment goal, policies and restrictions.

transaction, or any class or classes of persons, securities or transactions, from any provision of section 12(d)(1) if the exemption is consistent with the public interest and the protection of investors. Applicants request an exemption under section 12(d)(1)(J) of the Act from the provisions of sections 12(d)(1)(A) and 12(d)(1)(C) of the Act.

5. Applicants submit that the structure of the Transaction adequately addresses the concerns underlying the limits in section 12(d)(1), which include concerns about control by a fund of funds over underlying funds and a layering of costs to investors in terms of duplication of administrative expenses, sales charges and advisory fees. Applicants submit that there is no danger of control over Global Trust by Value Trust or of a layering of costs to stockholders of Value Trust. Applicants note that ownership of Global Trust by Value Trust (other than the Seed Capital Shares) will exist for only an instant. In addition, applicants state the Transaction involves no layering of costs to stockholders, since Global Trust will not incur any advisory, administrative, transfer agency, custody, or similar fees until after completion of the Transaction.

6. Section 17(a) of the Act generally prohibits sales or purchases of securities between a registered investment company and an affiliated person. Section 2(a)(3) of the Act defines an ''affiliated person'' of another person to include (a) any person directly or indirectly owning, controlling, or holding with power to vote 5% or more of the outstanding voting securities of the other person, (b) any person 5% or more of whose voting securities are directly or indirectly owned controlled or held with the power to vote by the other person, and (c) any person directly or indirectly controlling, controlled by, or under common control with, the other person. Value Trust may be viewed as an affiliated person of Global Trust under section 2(a)(3) because Value Trust will own 100 percent of the Global Trust's voting securities until the consummation of the Transaction. Value Trust and Global Trust also may be viewed as affiliated persons of each other to the extent that they may be deemed to be under the common control of the Adviser. As a result of the affiliation between Value Trust and Global Trust, section 17(a) would prohibit the Transaction.

7. Applicants request an exemption pursuant to section 17(b) of the Act from the provisions of section 17(a) in order to permit applicants to effect the Transaction. Section 17(b) authorizes the Commission to issue such an exemptive order if the Commission finds that the terms of the proposed transaction are fair and reasonable and do not involve overreaching on the part of any persons concerned, and the proposed transaction is consistent with the policy of each registered investment company and the general purposes of the Act.

8. Applicants assert that the terms of the Transaction, including the consideration to be paid or received, are fair and reasonable and do not involve overreaching by any person concerned. Applicants state that the proposed contribution by Value Trust of a portion of its assets to Global Trust in exchange for shares of Global Trust common stock will be based on the value of such assets computed as of the close of trading on the New York State Exchange on a business day to be selected by the Board of Value Trust (such business day, the ''Valuation Date''), in the same manner as for purposes of the daily net asset valuation for Value Trust. The Transaction will occur after the close of trading on the New York Stock Exchange on the Valuation Date. Applicants anticipate that such assets will consist largely or exclusively of cash, short-term fixed income instruments and/or Unappreciated Equity Securities and thus will pose no issues with respect to valuation.[6] Shares of Global Trust common stock distributed by Value Trust in the Transaction will be valued based on the value of Global Trust's assets. ''Value'' for those purposes will be determined in accordance with the provisions of section 2(a)(41) of the Act and rule 2a–4 under the Act.

9. With respect to the Transaction, each Board, including a majority of the Independent Directors, determined that participation in the Transaction is in the best interests of Value Trust or Global Trust, as applicable, and that the interests of the existing stockholders of Value Trust or Global Trust, as applicable, will not be diluted as a result of the Transaction. These findings, and the basis upon which the findings were made, will be recorded fully in the minute book of Value Trust or Global Trust, as applicable. In addition, the Adviser, in selecting Unappreciated Equity Securities to be contributed to Global Trust, will, in the exercise of its fiduciary responsibilities, act in a manner it believes to be in the best interests of both Funds.

[6] Since market quotations will exist for the Unappreciated Equity Securities, if any, to be contributed by Value Trust to Global Trust, such securities will be valued at market value.

10. Applicants state that the Transaction will be consistent with the stated investment policies of Value Trust and Global Trust as disclosed to stockholders. The distribution of shares of Global Trust common stock will not initially change the position of Value Trust's stockholders with respect to the underlying investments that they then own. The Proxy Statement/Prospectus will be used to solicit the approval of Value Trust's stockholders of the Transaction at a vote to take place following the issuance of the requested order. Value Trust's stockholders will have the opportunity to vote on the Transaction after having received disclosure concerning the Transaction.

11. Applicants also seek an order under section 17(d) of the Act and rule 17d–1 under the Act. Section 17(d) and rule 17d–1 prohibit affiliated persons from participating in joint arrangements with a registered investment company unless authorized by the Commission. In passing on applications for these orders, rule 17d–1 provides that the Commission will consider whether the participation of the investment company is consistent with the provisions, policies and purposes of the Act, and the extent to which the participation is on a basis different from or less advantageous than that of the other participants. Applicants request an order pursuant to rule 17d–1 to the extent that the participation of applicants in the Transaction may be deemed to constitute a prohibited joint transaction.

12. Applicants state that the Transaction will not place any of Value Trust, Global Trust, or existing shareholders of Value Trust in a position less advantageous than that of any other person. The value of Value Trust's assets transferred to Global Trust (and the shares of Global Trust common stock received in return) will be based on their value as computed on as of the close of trading on the New York Stock Exchange on the Valuation Date in accordance with the requirements of the Act and pursuant to valuation procedures adopted by the Board of Value Trust. The shares of Global Trust common stock will be distributed to Value Trust's common stockholders, leaving the stockholders in the same investment posture immediately following the Transaction as before, subject only to changes in market price of the underlying assets subsequent to the Transaction.

13. Applicants assert that the Transaction has been proposed in order to benefit the stockholders of Value Trust as well as Global Trust. Although the advisory fee for Global Trust will be

different from Value Trust, and may at times be higher than that of Value Trust, neither the Adviser nor any other affiliated person of Value Trust or Global Trust will receive additional fees solely as a result of the Transaction. Applicants state that although it is possible that the creation of Global Trust may benefit the Adviser by providing it with a higher advisory fee in certain circumstances, the Board of Value Trust has determined that such result does not supply a benefit that could not have otherwise been achieved through an initial public offering of a global equity securities fund and that such benefit is both marginal and hypothetical because the assets of Value Trust to be contributed to Global Trust pursuant to the Transaction represent only approximately 9.2% of Value Trust's net assets as of December 30, 2012. In addition, by creating Global Trust through the Transaction, Value Trust is effectively enabling its common stockholders to receive securities without the costs associated with a public offering.

For the Commission, by the Division of Investment Management, under delegated authority.

Kevin M. O'Neill,

Deputy Secretary.

[FR Doc. 2013–08318 Filed 4–9–13; 8:45 am]

BILLING CODE 8011–01–P

SECURITIES AND EXCHANGE COMMISSION

[Investment Company Act Release No. 30447; File No. 812–14034]

Royce Focus Trust, Inc., *et al.;* Notice of Application

April 4, 2013.

AGENCY: Securities and Exchange Commission (''Commission'').

ACTION: Notice of an application under section 6(c) of the Investment Company Act of 1940 (''Act'') for an exemption from section 19(b) of the Act and rule 19b–1 under the Act.

Applicants: Royce Focus Trust, Inc. (''RFT''), Royce Value Trust, Inc. (''RVT''), Royce Micro-Cap Trust, Inc. (''RMT'') and Royce & Associates, LLC (''R&A'').

Summary of Application: Applicants request an order to permit certain registered closed-end investment companies to make periodic distributions of long-term capital gains with respect to their outstanding common stock as frequently as monthly in any one taxable year, and as frequently as distributions are specified by or in accordance with the terms of any outstanding preferred stock that such investment companies may issue. The requested order would supersede a prior order (''Prior Order'').[1]

DATES: *Filing Dates:* The application was filed on May 22, 2012 and amended on March 6, 2013.

Hearing or Notification of Hearing: An order granting the application will be issued unless the Commission orders a hearing. Interested persons may request a hearing by writing to the Commission's Secretary and serving applicants with a copy of the request, personally or by mail. Hearing requests should be received by the Commission by 5:30 p.m. on April 29, 2013 and should be accompanied by proof of service on applicants, in the form of an affidavit or, for lawyers, a certificate of service. Hearing requests should state the nature of the writer's interest, the reason for the request, and the issues contested. Persons who wish to be notified of a hearing may request notification by writing to the Commission's Secretary.

ADDRESSES: Elizabeth M. Murphy, Secretary, U.S. Securities and Exchange Commission, 100 F Street, NE., Washington, DC 20549–1090; Applicants, Frank P. Bruno, Esq., Sidley Austin LLP, 787 Seventh Avenue, New York, New York 10019–6018.

FOR FURTHER INFORMATION CONTACT: Laura J. Riegel, Senior Counsel, at (202) 551–6873, or Mary Kay Frech, Branch Chief, at (202) 551–6821 (Division of Investment Management, Exemptive Applications Office).

SUPPLEMENTARY INFORMATION: The following is a summary of the application. The complete application may be obtained via the Commission's Web site by searching for the file number, or for an applicant using the Company name box, at *http://www.sec.gov/search/search.htm,* or by calling (202) 551–8090.

Applicants' Representations

1. RFT, RMT, and RVT (the ''Current Funds'') are Maryland corporations registered under the Act as closed-end management investment companies.[2] RFT's investment goal is long-term capital growth, which it seeks to achieve by investing in equity securities and non-convertible fixed income securities. Shares of the common stock of RFT are listed and traded on the NASDAQ Global Select Market. RMT's investment goal is long-term capital growth, which it seeks to achieve by investing in equity securities of micro-cap companies. Shares of RMT's common stock are listed and traded on the New York Stock Exchange. RVT's investment goal is long-term capital growth, which it seeks to achieve by investing in the equity securities of small-and micro-cap companies that are believed to be trading significantly below their current worth. Shares of the common stock of RVT are listed and traded on the New York Stock Exchange. Each Current Fund had issued preferred stock all of which was redeemed on November 15, 2012. Applicants believe that investors in closed-end funds may prefer an investment vehicle that provides regular current income through fixed distribution policies that would be available through a Distribution Policy (as defined below).

2. R&A, a Delaware limited liability company, is registered under the Investment Advisers Act of 1940 (the ''Advisers Act'') as an investment adviser. R&A provides investment advisory services to the Current Funds. Each Adviser to a Fund will be registered as an investment adviser under the Advisers Act.

3. Each Current Fund relied on the Prior Order to implement distribution policies with respect to their common stock and institute dividend payment policies with respect to their preferred stock. To maintain certainty for the distribution policies of the Current Funds and the distribution policies that other Funds may adopt in the future (each, a ''Distribution Policy''), applicants request an order that would supersede the Prior Order. When the requested order is issued, it will supersede the Prior Order and applicants may rely solely on the order.

4. Applicants state that prior to a Fund's implementing a Distribution Policy in reliance on the order, the board of directors (the ''Board'') of each Fund, including a majority of the directors who are not ''interested

[1] Royce Global Trust, Inc., et al., Investment Company Act Release Nos. 22665 (May 16, 1997) (notice) and 22704 (Jun. 11, 1997) (Prior Order).

[2] All exiting registered closed-end investment companies that currently intend to rely on the order have been named as applicants. Applicants request that the order also apply to each other registered closed-end investment company advised or to be advised in the future by R&A or by an entity controlling, controlled by, or under common control (within the meaning of section 2(a)(9) of the Act) with R&A (including any successor in interest) (each such entity, including R&A, the ''Adviser'') that in the future seeks to rely on the order (such investment companies, together with the Current Funds, are collectively, the ''Funds'' and individually, a ''Fund''). Any Fund that may rely on the order in the future will comply with the terms and conditions of the application. A successor in interest is limited to entities that result from a reorganization into another jurisdiction or a change in the type of business organization.

persons'' of the Fund, as defined in section 2(a)(19) of the Act (the ''Independent Directors''), will request, and the Adviser will provide, such information as is reasonably necessary to make an informed determination of whether the Board should adopt a proposed Distribution Policy, or, in the case of the Current Funds, re-approve an existing Distribution Policy. In particular, the Board and the Independent Directors will review information regarding the purpose and terms of the Distribution Policy; the likely effects of the policy on the Fund's long-term total return (in relation to market price and its net asset value per share of common stock (''NAV'')); the expected relationship between the Fund's distribution rate on its common stock under the policy and the Fund's total return (in relation to NAV); whether the rate of distribution would exceed such Fund's expected total return in relation to its NAV; and any foreseeable material effects of the policy on the Fund's long-term total return (in relation to market price and NAV). The Independent Directors also will consider what conflicts of interest the Adviser and the affiliated persons of the Adviser and the Fund might have with respect to the adoption or implementation of the Distribution Policy. Applicants state that, only after considering such information will the Board, including the Independent Directors, of each Fund approve a Distribution Policy and in connection with such approval will determine that the Distribution Policy is consistent with a Fund's investment objectives and in the best interests of the holders of the Fund's common stock.

5. Applicants state that the purpose of a Distribution Policy, generally, would be to permit a Fund to distribute over the course of each year, through periodic distributions in relatively equal amounts (plus any required special distributions), an amount closely approximating the total taxable income of such Fund during such year and, if so determined by its Board, all or a portion of returns of capital paid by portfolio companies to such Fund during the year. Under the Distribution Policy of a Fund, such Fund would distribute to its respective common stockholders a fixed percentage of the market price of such Fund's common stock at a particular point in time or a fixed percentage of NAV at a particular time or a fixed amount per share of common stock, any of which may be adjusted from time to time. It is anticipated that under a Distribution Policy, the minimum annual distribution rate with respect to such Fund's common stock would be independent of the Fund's performance during any particular period but would be expected to correlate with the Fund's performance over time. Except for extraordinary distributions and potential increases or decreases in the final dividend periods in light of a Fund's performance for an entire calendar year and to enable the Fund to comply with the distribution requirements of Subchapter M of the Internal Revenue Code (''Code'') for the calendar year, each distribution on the Fund's common stock would be at the stated rate then in effect.

6. Applicants state that prior to the implementation of a Distribution Policy for any Fund in reliance on the order, the Board of such Fund will have adopted policies and procedures under rule 38a–1 under the Act that: (i) Are reasonably designed to ensure that all notices required to be sent to the Fund's stockholders pursuant to section 19(a) of the Act, rule 19a–1 thereunder and condition 4 below (each a ''19(a) Notice'') include the disclosure required by rule 19a–1 under the Act and by condition 2(a) below, and that all other written communications by the Fund or its agents regarding distributions under the Distribution Policy include the disclosure required by condition 3(a) below; and (ii) require the Fund to keep records that demonstrate its compliance with all of the conditions of the order and that are necessary for such Fund to form the basis for, or demonstrate the calculation of, the amounts disclosed in its 19(a) Notices.

Applicants' Legal Analysis

1. Section 19(b) of the Act generally makes it unlawful for any registered investment company to make long-term capital gains distributions more than once every twelve months. Rule 19b-1 limits the number of capital gains dividends, as defined in section 852(b)(3)(C) of the Code (''distributions''), that a fund may make with respect to any one taxable year to one, plus a supplemental distribution made pursuant to section 855 of the Code not exceeding 10% of the total amount distributed for the year, plus one additional capital gain dividend made in whole or in part to avoid the excise tax under section 4982 of the Code.

2. Section 6(c) of the Act provides, in relevant part, that the Commission may exempt any person or transaction from any provision of the Act to the extent that such exemption is necessary or appropriate in the public interest and consistent with the protection of investors and the purposes fairly intended by the policy and provisions of the Act.

3. Applicants state that the one of the concerns leading to the enactment of section 19(b) and adoption of rule 19b-1 was that stockholders might be unable to distinguish between frequent distributions of capital gains and dividends from investment income. Applicants state, however, that rule 19a-1 effectively addresses this concern by requiring that distributions (or the confirmation of the reinvestment thereof) estimated to be sourced in part from capital gains or capital be accompanied by a separate statement showing the sources of the distribution (*e.g.,* estimated net income, net short-term capital gains, net long-term capital gains and/or return of capital). Applicants state that similar information is included in the Funds' annual reports to stockholders and on the Internal Revenue Service Form 1099 DIV, which is sent to each common and preferred stockholder who received distributions during a particular year.

4. Applicants further state that each Fund will make the additional disclosures required by the conditions set forth below, and each Fund will adopt compliance policies and procedures in accordance with rule 38a-1 under the Act to ensure that all required 19(a) Notices and disclosures are sent to stockholders. Applicants state that the information required by section 19(a), rule 19a–1, the Distribution Policy, the policies and procedures under rule 38a–1 noted above, and the conditions listed below will help ensure that each Fund's stockholders are provided sufficient information to understand that their periodic distributions are not tied to a Fund's net investment income (which for this purpose is the Fund's taxable income other than from capital gains) and realized capital gains to date, and may not represent yield or investment return. Accordingly, applicants assert that continuing to subject the Funds to section 19(b) and rule 19b–1 would afford stockholders no extra protection.

5. Applicants note that section 19(b) and rule 19b–1 also were intended to prevent certain improper sales practices, including, in particular, the practice of urging an investor to purchase shares of a fund on the basis of an upcoming capital gains dividend (''selling the dividend''), where the dividend would result in an immediate corresponding reduction in NAV and would be in effect a taxable return of the investor's capital. Applicants submit that the ''selling the dividend'' concern should not apply to closed-end investment

companies, such as the Funds, which do not continuously distribute shares. According to applicants, if the underlying concern extends to secondary market purchases of shares of closed-end funds that are subject to a large upcoming capital gains dividend, adoption of a periodic distribution plan actually helps minimize the concern by avoiding, through periodic distributions, any buildup of large end-of-the-year distributions.

6. Applicants also note that the common stock of closed-end funds often trades in the marketplace at a discount to its NAV. Applicants believe that this discount may be reduced if the Funds are permitted to pay relatively frequent dividends on their common stock at a consistent rate, whether or not those dividends contain an element of long-term capital gains.

7. Applicants assert that the application of rule 19b–1 to a Distribution Policy actually could have an inappropriate influence on portfolio management decisions. Applicants state that, in the absence of an exemption from rule 19b–1, the adoption of a periodic distribution plan imposes pressure on management (i) not to realize any net long-term capital gains until the point in the year that the fund can pay all of its remaining distributions in accordance with rule 19b–1, and (ii) not to realize any long-term capital gains during any particular year in excess of the amount of the aggregate pay-out for the year (since as a practical matter excess gains must be distributed and accordingly would not be available to satisfy pay-out requirements in following years), notwithstanding that purely investment considerations might favor realization of long-term gains at different times or in different amounts. Applicants assert that by limiting the number of long-term capital gain dividends that a Fund may make with respect to any one year, rule 19b–1 may prevent the normal and efficient operation of a periodic distribution plan whenever that Fund's realized net long-term capital gains in any year exceed the total of the periodic distributions that may include such capital gains under the rule.

8. Applicants also assert that rule 19b–1 may force fixed regular periodic distributions under a periodic distribution plan to be funded with returns of capital [3] (to the extent net investment income and realized short-term capital gains are insufficient to fund the distribution), even though realized net long-term capital gains otherwise would be available. To distribute all of a Fund's long-term capital gains within the limits in rule 19b–1, a Fund may be required to make total distributions in excess of the annual amount called for by its periodic distribution plan, or to retain and pay taxes on the excess amount. Applicants assert that the requested order would minimize these anomalous effects of rule 19b–1 by enabling the Funds to realize long-term capital gains as often as investment considerations dictate without fear of violating rule 19b–1.

9. Applicants state that Revenue Ruling 89–81 under the Code requires that a fund that seeks to qualify as a regulated investment company under the Code and that has both common stock and preferred stock outstanding designate the types of income, e.g., investment income and capital gains, in the same proportion as the total distributions distributed to each class for the tax year. To satisfy the proportionate designation requirements of Revenue Ruling 89–81, whenever a fund has realized a long-term capital gain with respect to a given tax year, the fund must designate the required proportionate share of such capital gain to be included in common and preferred stock dividends. Applicants state that although rule 19b–1 allows a fund some flexibility with respect to the frequency of capital gains distributions, a fund might use all of the exceptions available under the rule for a tax year and still need to distribute additional capital gains allocated to the preferred stock to comply with Revenue Ruling 89–81.

10. Applicants assert that the potential abuses addressed by section 19(b) and rule 19b–1 do not arise with respect to preferred stock issued by a closed-end fund. Applicants assert that such distributions are either fixed or determined in periodic auctions by reference to short-term interest rates rather than by reference to performance of the issuer, and Revenue Ruling 89–81 determines the proportion of such distributions that are comprised of long-term capital gains.

11. Applicants also submit that the ''selling the dividend'' concern is not applicable to preferred stock, which entitles a holder to no more than a specified periodic dividend at a fixed rate or the rate determined by the market, and, like a debt security, is priced based upon its liquidation preference, dividend rate, credit quality, and frequency of payment. Applicants state that investors buy preferred stock for the purpose of receiving payments at the frequency bargained for, and any application of rule 19b–1 to preferred stock would be contrary to the expectation of investors.

12. Applicants request an order under section 6(c) of the Act granting an exemption from the provisions of section 19(b) of the Act and rule 19b–1 thereunder to permit each Fund to distribute periodic capital gain dividends (as defined in section 852(b)(3)(C) of the Code) as frequently as monthly in any one taxable year in respect of its common stock and as often as specified by, or determined in accordance with the terms of, any preferred stock issued by the Fund.

Applicants' Conditions

Applicants agree that, with respect to each Fund seeking to rely on the order, the order will be subject to the following conditions:

1. Compliance Review and Reporting

The Fund's chief compliance officer will: (a) report to the Fund's Board, no less frequently than once every three months or at the next regularly scheduled quarterly Board meeting, whether (i) the Fund and its Adviser have complied with the conditions of the order, and (ii) a material compliance matter (as defined in rule 38a–1(e)(2) under the Act) has occurred with respect to such conditions; and (b) review the adequacy of the policies and procedures adopted by the Board no less frequently than annually.

2. Disclosures to Fund Stockholders

(a) Each 19(a) Notice disseminated to the holders of the Fund's common stock, in addition to the information required by section19(a) and rule 19a–1:

(i) Will provide, in a tabular or graphical format:

(1) the amount of the distribution, on a per share of common stock basis, together with the amounts of such distribution amount, on a per share of common stock basis and as a percentage of such distribution amount, from estimated: (A) net investment income; (B) net realized short-term capital gains; (C) net realized long-term capital gains; and (D) return of capital or other capital source;

(2) the fiscal year-to-date cumulative amount of distributions, on a per share of common stock basis, together with the amounts of such cumulative amount, on a per share of common stock basis and as a percentage of such cumulative amount of distributions, from estimated: (A) Net investment income; (B) net realized short-term capital gains; (C) net realized long-term capital gains; and (D) return of capital or other capital source;

[3] Returns of capital as used in the application means return of capital for financial accounting purposes and not for tax accounting purposes.

(3) the average annual total return in relation to the change in NAV for the 5-year period (or, if the Fund's history of operations is less than five years, the time period commencing immediately following the Fund's first public offering) ending on the last day of the month ended immediately prior to the most recent distribution record date compared to the current fiscal period's annualized distribution rate expressed as a percentage of NAV as of the last day of the month prior to the most recent distribution record date; and

(4) the cumulative total return in relation to the change in NAV from the last completed fiscal year to the last day of the month prior to the most recent distribution record date compared to the fiscal year-to-date cumulative distribution rate expressed as a percentage of NAV as of the last day of the month prior to the most recent distribution record date. Such disclosure shall be made in a type size at least as large and as prominent as the estimate of the sources of the current distribution; and

(ii) Will include the following disclosure:

(1) ''You should not draw any conclusions about the Fund's investment performance from the amount of this distribution or from the terms of the Fund's Distribution Policy'';

(2) ''The Fund estimates that it has distributed more than its income and net realized capital gains; therefore, a portion of your distribution may be a return of capital. A return of capital may occur, for example, when some or all of the money that you invested in the Fund is paid back to you. A return of capital distribution does not necessarily reflect the Fund's investment performance and should not be confused with 'yield' or 'income' '' [4]; and

(3) ''The amounts and sources of distributions reported in this 19(a) Notice are only estimates and are not being provided for tax reporting purposes. The actual amounts and sources of the amounts for tax reporting purposes will depend upon the Fund's investment experience during the remainder of its fiscal year and may be subject to changes based on tax regulations. The Fund will send you a Form 1099–DIV for the calendar year that will tell you how to report these distributions for federal income tax purposes.''

[4] The disclosure in condition 2(a)(ii)(2) will be included only if the current distribution or the fiscal year-to-date cumulative distributions are estimated to include a return of capital.

Such disclosure shall be made in a type size at least as large as and as prominent as any other information in the 19(a) Notice and placed on the same page in close proximity to the amount and the sources of the distribution.

(b) On the inside front cover of each report to stockholders under rule 30e–1 under the Act, the Fund will:

(i) describe the terms of the Distribution Policy (including the fixed amount or fixed percentage of the distributions and the frequency of the distributions);

(ii) include the disclosure required by condition 2(a)(ii)(1) above;

(iii) state, if applicable, that the Distribution Policy provides that the Board may amend or terminate the Distribution Policy at any time without prior notice to Fund stockholders; and

(iv) describe any reasonably foreseeable circumstances that might cause the Fund to terminate the Distribution Policy and any reasonably foreseeable consequences of such termination.

(c) Each report provided to stockholders under rule 30e-1 under the Act and each prospectus filed with the Commission on Form N–2 under the Act, will provide the Fund's total return in relation to changes in NAV in the financial highlights table and in any discussion about the Fund's total return.

3. Disclosure to Stockholders, Prospective Stockholders and Third Parties

(a) The Fund will include the information contained in the relevant 19(a) Notice, including the disclosure required by condition 2(a)(ii) above, in any written communication (other than a communication on Form 1099) about the Distribution Policy or distributions under the Distribution Policy by the Fund, or agents that the Fund has authorized to make such communication on the Fund's behalf, to any Fund stockholder, prospective stockholder or third-party information provider;

(b) The Fund will issue, contemporaneously with the issuance of any 19(a) Notice, a press release containing the information in the 19(a) Notice and will file with the Commission the information contained in such 19(a) Notice, including the disclosure required by condition 2(a)(ii) above, as an exhibit to its next filed Form N–CSR; and

(c) The Fund will post prominently a statement on its (or the Adviser's) Web site containing the information in each 19(a) Notice, including the disclosure required by condition 2(a)(ii) above, and will maintain such information on such Web site for at least 24 months.

4. Delivery of 19(a) Notices to Beneficial Owners

If a broker, dealer, bank or other person (''financial intermediary'') holds common stock issued by the Fund in nominee name, or otherwise, on behalf of a beneficial owner, the Fund: (a) Will request that the financial intermediary, or its agent, forward the 19(a) Notice to all beneficial owners of the Fund's stock held through such financial intermediary; (b) will provide, in a timely manner, to the financial intermediary, or its agent, enough copies of the 19(a) Notice assembled in the form and at the place that the financial intermediary, or its agent, reasonably requests to facilitate the financial intermediary's sending of the 19(a) Notice to each beneficial owner of the Fund's stock; and (c) upon the request of any financial intermediary, or its agent, that receives copies of the 19(a) Notice, will pay the financial intermediary, or its agent, the reasonable expenses of sending the 19(a) Notice to such beneficial owners.

5. Additional Board Determinations for Funds Whose Common Stock Trades at a Premium

If:

(a) The Fund's common stock has traded on the stock exchange that they primarily trade on at the time in question at an average premium to NAV equal to or greater than 10%, as determined on the basis of the average of the discount or premium to NAV of the Fund's shares of common stock as of the close of each trading day over a 12-week rolling period (each such 12-week rolling period ending on the last trading day of each week); and

(b) The Fund's annualized distribution rate for such 12-week rolling period, expressed as a percentage of NAV as of the ending date of such 12-week rolling period, is greater than the Fund's average annual total return in relation to the change in NAV over the 2-year period ending on the last day of such 12-week rolling period; then:

(i) At the earlier of the next regularly scheduled meeting or within four months of the last day of such 12-week rolling period, the Board, including a majority of the Independent Directors:

(1) will request and evaluate, and the Fund's Adviser will furnish, such information as may be reasonably necessary to make an informed determination of whether the Distribution Policy should be continued or continued after amendment;

(2) will determine whether continuation, or continuation after amendment, of the Distribution Policy is consistent with the Fund's investment objective(s) and policies and is in the best interests of the Fund and its stockholders, after considering the information in condition 5(b)(i)(1) above; including, without limitation:

(A) whether the Distribution Policy is accomplishing its purpose(s);

(B) the reasonably foreseeable material effects of the Distribution Policy on the Fund's long-term total return in relation to the market price and NAV of the Fund's common stock; and

(C) the Fund's current distribution rate, as described in condition 5(b) above, compared with the Fund's average annual taxable income or total return over the 2-year period, as described in condition 5(b), or such longer period as the Board deems appropriate; and

(3) based upon that determination, will approve or disapprove the continuation, or continuation after amendment, of the Distribution Policy; and

(ii) The Board will record the information considered by it, including its consideration of the factors listed in condition 5(b)(i)(2) above, and the basis for its approval or disapproval of the continuation, or continuation after amendment, of the Distribution Policy in its meeting minutes, which must be made and preserved for a period of not less than six years from the date of such meeting, the first two years in an easily accessible place.

6. Public Offerings

The Fund will not make a public offering of the Fund's common stock other than:

(a) a rights offering below NAV to holders of the Fund's common stock;

(b) an offering in connection with a dividend reinvestment plan, merger, consolidation, acquisition, spin-off or reorganization of the Fund; or

(c) an offering other than an offering described in conditions 6(a) and 6(b) above, provided that, with respect to such other offering:

(i) the Fund's annualized distribution rate for the six months ending on the last day of the month ended immediately prior to the most recent distribution record date,[5] expressed as a percentage of NAV as of such date, is no more than 1 percentage point greater than the Fund's average annual total return for the 5-year period ending on such date;[6] and

(ii) the transmittal letter accompanying any registration statement filed with the Commission in connection with such offering discloses that the Fund has received an order under section 19(b) to permit it to make periodic distributions of long-term capital gains with respect to its shares of common stock as frequently as twelve times each year, and as frequently as distributions are specified by or determined in accordance with the terms of any outstanding shares of preferred stock as such Fund may issue.

7. Amendments to Rule 19b–1

The requested order will expire on the effective date of any amendment to rule 19b–1 that provides relief permitting certain closed-end investment companies to make periodic distributions of long-term capital gains with respect to their outstanding common stock as frequently as twelve times each year.

For the Commission, by the Division of Investment Management, under delegated authority.

Kevin M. O'Neill,

Deputy Secretary.

[FR Doc. 2013–08317 Filed 4–9–13; 8:45 am]

BILLING CODE 8011–01–P

[5] If the Fund has been in operation fewer than six months, the measured period will begin immediately following the Fund's first public offering.

[6] If the Fund has been in operation fewer than five years, the measured period will begin immediately following the Fund's first public offering.

SECURITIES AND EXCHANGE COMMISSION

[Release Nos. 33–9399; 34–69316, File No. 265–27]

SEC Advisory Committee on Small and Emerging Companies

AGENCY: Securities and Exchange Commission.

ACTION: Notice of Meeting.

SUMMARY: The Securities and Exchange Commission Advisory Committee on Small and Emerging Companies is providing notice that it will hold a public meeting on Wednesday, May 1, 2013, in Multi-Purpose Room LL–006 at the Commission's headquarters, 100 F Street NE., Washington, DC. The meeting will begin at 9:30 a.m. (EDT) and will be open to the public. The meeting will be webcast on the Commission's Web site at *www.sec.gov.* Persons needing special accommodations to take part because of a disability should notify the contact person listed below. The public is invited to submit written statements to the Committee. The agenda for the meeting includes matters relating to rules and regulations affecting small and emerging companies under the federal securities laws.

DATES: The public meeting will be held Wednesday, May 1, 2013. Written statements should be received on or before April 26, 2013.

ADDRESSES: The meeting will be held at the Commission's headquarters, 100 F Street NE., Washington, DC. Written statements may be submitted by any of the following methods:

Electronic Statements

- Use the Commission's Internet submission form (*http://www.sec.gov/info/smallbus/acsec.shtml*); or
- Send an email message to *rule-comments@sec.gov*. Please include File Number 265–27 on the subject line; or

Paper Statements

- Send paper statements in triplicate to Elizabeth M. Murphy, Federal Advisory Committee Management Officer, Securities and Exchange Commission, 100 F Street NE., Washington, DC 20549–1090.

All submissions should refer to File No. 265–27. This file number should be included on the subject line if email is used. To help us process and review your statement more efficiently, please use only one method. The Commission will post all statements on the Advisory Committee's Web site (*http://www.sec.gov./info/smallbus/acsec.shtml*). Statements also will be available for Web site viewing and printing in the Commission's Public Reference Room, 100 F Street NE., Room 1580, Washington, DC 20549, on official business days between the hours of 10:00 a.m. and 3:00 p.m. All statements received will be posted without change; we do not edit personal identifying information from submissions. You should submit only information that you wish to make available publicly.

FOR FURTHER INFORMATION CONTACT: Johanna V. Losert, Special Counsel, at (202) 551–3460, Office of Small Business Policy, Division of Corporation Finance, Securities and Exchange Commission, 100 F Street NE., Washington, DC 20549–3628.

SUPPLEMENTARY INFORMATION: In accordance with Section 10(a) of the Federal Advisory Committee Act, 5 U.S.C.-App. 1, and the regulations thereunder, Lona Nallengara, Designated Federal Officer of the Committee, has ordered publication of this notice.

Dated: April 5, 2013.

Elizabeth M. Murphy,

Committee Management Officer.

[FR Doc. 2013–08372 Filed 4–9–13; 8:45 am]

BILLING CODE 8011–01–P

SECURITIES AND EXCHANGE COMMISSION

Sunshine Act Meeting

Notice is hereby given, pursuant to the provisions of the Government in the Sunshine Act, Public Law 94–409, that the Securities and Exchange Commission Advisory Committee on Small and Emerging Companies will hold a public meeting on Wednesday, May 1, 2013, in Multi-Purpose Room LL–006 at the Commission's headquarters, 100 F Street NE., Washington, DC. The meeting will begin at 9:30 a.m. (EDT) and will be open to the public. Seating will be on a first-come, first-served basis. Doors will open at 9:00 a.m. Visitors will be subject to security checks. The meeting will be Webcast on the Commission's Web site at www.sec.gov.

On April 5, 2013 the Commission published notice of the Committee meeting (Release No. 33–9399), indicating that the meeting is open to the public and inviting the public to submit written comments to the Committee. This Sunshine Act notice is being issued because a majority of the Commission may attend the meeting.

The agenda for the meeting includes consideration of recommendations and other matters relating to rules and regulations affecting small and emerging companies under the federal securities laws. For further information, please contact the Office of the Secretary at (202) 551–5400.

Dated: April 5, 2013.

Elizabeth M. Murphy,

Secretary.

[FR Doc. 2013–08430 Filed 4–8–13; 11:15 am]

BILLING CODE 8011–01–P

SECURITIES AND EXCHANGE COMMISSION

Sunshine Act Meeting

Notice is hereby given, pursuant to the provisions of the Government in the Sunshine Act, Public Law 94–409, that the Securities and Exchange Commission Investor Advisory Committee will hold a meeting on Thursday, April 11, 2013, in Multi-Purpose Room LL–006 at the Commission's headquarters, 100 F Street NE., Washington, DC. The meeting will begin at 10:00 a.m. (EDT) and will be open to the public, except for subcommittee meetings. Seating will be on a first-come, first-served basis. Doors will open at 9:30 a.m. Visitors will be subject to security checks. The meeting will be Webcast on the Commission's Web site at *www.sec.gov*.

Commissioner Aguilar, as duty officer, determined that no earlier notice thereof was possible.

On March 29, 2013, the Commission issued notice of the Committee meeting (Release No. 33–9397), indicating that the meeting is open to the public and inviting the public to submit written comments to the Committee. This Sunshine Act notice is being issued because a quorum of the Commission may attend the meeting.

The agenda for the meeting includes: (i) approval of minutes; (ii) consideration of a recommendation of the Investor as Purchaser subcommittee regarding target date funds; (iii) subcommittee meetings; and (iv) subcommittee updates. For further information, please contact the Office of the Secretary at (202) 551–5400.

Dated: April 5, 2013.

Elizabeth M. Murphy,

Secretary.

[FR Doc. 2013–08427 Filed 4–8–13; 11:15 am]

BILLING CODE 8011–01–P

SECURITIES AND EXCHANGE COMMISSION

[Release No. 34–69301; File No. SR–NSCC–2012–810]

Self-Regulatory Organizations; National Securities Clearing Corporation; Notice of No Objection to Advance Notice Filing to Eliminate the Offset of Its Obligations With Institutional Delivery Transactions That Settle at The Depository Trust Company for the Purpose of Calculating Its Clearing Fund Under Procedure XV of Its Rules & Procedures

April 4, 2013.

I. Introduction

On December 18, 2012, National Securities Clearing Corporation (''NSCC'') filed with the Securities and Exchange Commission (''Commission'') advance notice SR–NSCC–2012–810 (''Advance Notice'') pursuant to Section 806(e) of Title VIII of the Dodd-Frank Wall Street Reform and Consumer Protection Act (''Dodd-Frank Act''),[1] entitled the Payment, Clearing, and Settlement Supervision Act of 2010 (''Clearing Supervision Act'' or ''Title VIII'') and Rule 19b–4(n) of the Securities Exchange Act of 1934 (''Exchange Act''). The Advance Notice was published in the **Federal Register** on January 17, 2013.[2] The Commission received two comment letters to the Advance Notice from one commenter.[3] NSCC responded to both comment letters.[4] This publication serves as notice of no objection to the Advance Notice.

II. Analysis

NSCC filed the Advance Notice to permit it to make rule changes to its Rules & Procedures (''Rules'') designed to eliminate the offset of NSCC obligations with institutional delivery (''ID'') transactions that settle at The Depository Trust Company (''DTC'') for the purpose of calculating the NSCC clearing fund (''Clearing Fund'') under Procedure XV of its Rules, as discussed below.

A. ID Offset

NSCC maintains a Clearing Fund to have on deposit assets sufficient to satisfy losses that may otherwise be incurred by NSCC as the result of the default of an NSCC member (''Member'') and the resulting closeout of that Member's unsettled positions under NSCC's trade guaranty. Each Member is required to contribute to the Clearing Fund pursuant to a formula calculated daily. The Clearing Fund formula accounts for a variety of risk factors through the application of a number of components, including Value-at-Risk

[1] Dodd-Frank Wall Street Reform and Consumer Protection Act, Public Law 111–203, 124 Stat. 1376 (2010).

[2] Release No. 34–68621 (Jan. 10, 2013), 78 FR 3960 (Jan. 17, 2013). NSCC also filed a proposed rule change pursuant to Section 19(b)(1) of the Exchange Act on December 17, 2012 seeking Commission approval to permit NSCC to change its rules to reflect the proposed change described herein. The Commission published notice of the proposed rule change on December 28, 2012. Release No. 34–68549 (Dec. 28, 2012), 78 FR 792 (Jan. 4, 2013). The Commission extended the period of review of the proposed rule change on February 5, 2013. Release No. 34–68829 (Feb. 5, 2013), 78 FR 9751 (Feb. 11, 2013).

[3] Comment Letter from Lek Securities Corporation dated January 25, 2013 (*http://sec.gov/comments/sr-nscc-2012–810/nscc2012810–1.pdf*), and Comment Letter from Lek Securities Corporation dated March 18, 2013 (*http://sec.gov/comments/sr-nscc-2012–810/nscc2012810–3.pdf*) (collectively, the ''Lek Letters'').

[4] Response Letter from NSCC dated February 22, 2013 (*http://sec.gov/comments/sr-nscc-2012–810/nscc2012810–2.pdf*), and Response Letter from NSCC dated March 21, 2013 (*http://sec.gov/comments/sr-nscc-2012–810/nscc2012810–4.pdf*).

(''VaR'') [5] and Market Maker Domination (''MMDOM'').[6]

NSCC currently calculates the VaR and MMDOM components of a Member's Clearing Fund required deposit after allowing for a Member's net unsettled NSCC positions in a particular CUSIP to be offset by any pending ID transactions settling at DTC in the same CUSIP, which have been confirmed and/or affirmed through an institutional delivery system acceptable to NSCC (''ID Offset'').[7] ID Offset is based on the assumption that in the event of a Member's insolvency NSCC will be able to close out any trade for which there is a corresponding ID transaction settling at DTC by completing that ID transaction.[8]

B. Potential Inability To Complete ID Transactions

Generally, when NSCC ceases to act for a Member, it is obligated, for those transactions that it has guaranteed, to pay for deliveries made by non-defaulting Members that are due to the failed Member on the day they are due. If NSCC is unable to complete the ID transactions as contemplated by the current Clearing Fund calculation, then NSCC may need to liquidate a portfolio that could be substantially different than the portfolio for which NSCC collected its Clearing Fund, leaving NSCC potentially under-collateralized and exposed to market risk.

A defaulting Member's pending ID transactions may not be completed for a number of reasons. Completion of an ID transaction by its institutional counterparty is voluntary because that counterparty is not a Member, which means it is not bound by NSCC's Rules and is not party to any legally binding contract with NSCC that requires it or its custodian to complete the transaction. Moreover, based on news that a Member may be in distress or insolvent, the institutional counterparty or its investment adviser may take immediate market action with respect to the ID transaction, in order to reduce its market risk, which effectively eliminates the option for NSCC to complete the transactions. Finally, ID transactions settle trade-by-trade between the executing broker and the custodian; the netted ID positions used to offset the NSCC position could be comprised of thousands of individual trades with hundreds of different counterparties. In the event of a Member default, it could be time consuming for NSCC to contact the counterparties individually to get their agreement to complete the ID transactions. Even if NSCC were to get all of the counterparties to agree to complete the ID transactions, this could delay the prompt closeout of the defaulter's open positions and possibly expose NSCC to additional market risk in excess of the Clearing Fund.

Due to the risk that, in the event it ceases to act for a Member with pending ID transactions, NSCC may be unable to complete the pending ID transactions in the timeframe contemplated by its current Clearing Fund calculations and, as a result, may have insufficient margin in its Clearing Fund, as described above, NSCC will eliminate the ID Offset calculation from the VaR and MMDOM components of a Member's Clearing Fund requirement deposit.

C. Implementation Schedule

In order to mitigate the impact of this rule change on its Members, NSCC will implement the changes set forth in the Advance Notice over an 18-month period. On a date no earlier than 10 days following notice to Members by Important Notice (''Initial Implementation Date''), NSCC will eliminate ID Offset from ID transactions that have only been confirmed, but have not yet been affirmed. Beginning on a date approximately 12 months from the Initial Implementation Date, and no earlier than 10 days following notice to Members by Important Notice, NSCC will eliminate from ID Offset all affirmed ID transactions that have reached settlement date at the time the Clearing Fund calculations are run. Three months later, or approximately 15 months following the Initial Implementation Date, and on a date no earlier than 10 days following notice to Members by Important Notice, NSCC will eliminate from ID Offset all affirmed ID transactions that have reached either settlement date or the day prior to settlement date. Finally, on a date approximately 18 months following the Initial Implementation Date, and no earlier than 10 days following notice to Members by Important Notice, NSCC will eliminate ID Offset entirely for all ID transactions. Members will be advised of each proposed implementation date through issuance of NSCC Important Notices, which are publicly available at *www.dtcc.com.*

III. Discussion

Although Title VIII does not specify a standard of review for an Advance Notice, the stated purpose of Title VIII is instructive.[9] The stated purpose of Title VIII is to mitigate systemic risk in the financial system and promote financial stability by, among other things, promoting uniform risk management standards for systemically-important financial market utilities (''FMUs'') and providing an enhanced role for the Federal Reserve Board in the supervision of risk management standards for systemically-important FMUs.[10]

Section 805(a)(2) of the Clearing Supervision Act [11] authorizes the Commission to prescribe risk management standards for the payment, clearing, and settlement activities of designated clearing entities and financial institutions engaged in designated activities for which it is the supervisory agency or the appropriate financial regulator. Section 805(b) of the Clearing Supervision Act [12] states that the objectives and principles for the risk management standards prescribed under Section 805(a) shall be to:

- Promote robust risk management;
- promote safety and soundness;
- reduce systemic risks; and
- support the stability of the broader financial system.

The Commission adopted risk management standards under Section 805(a)(2) of the Clearing Supervision Act on October 22, 2012 (''Clearing Agency Standards'').[13] The Clearing Agency Standards became effective on January 2, 2013 and require clearing agencies that perform central counterparty (''CCP'') services to establish, implement, maintain, and

[5] The VaR component of the Clearing Fund calculation is a core component of the formula and is designed to calculate the amount of money that may be lost on a portfolio over a given period of time that is assumed necessary to liquidate the portfolio, within a given level of confidence. *See* Release No. 34–68621 (Jan. 10, 2013), 78 FR 3960 (Jan. 17, 2013).

[6] The MMDOM component of the Clearing Fund calculation is charged to market makers or firms that clear for them. In calculating the MMDOM, if the sum of the absolute values of net unsettled positions in a security for which the firm in question makes a market is greater than that firm's excess net capital, NSCC may then charge the firm an amount equal to such excess or the sum of each of the absolute values of the affected net unsettled positions, or a combination of both. MMDOM operates to identify concentration within a given CUSIP. *See* Release No. 34–68621 (Jan. 10, 2013), 78 FR 3960 (Jan. 17, 2013).

[7] For purposes of the ID Offset, NSCC includes ID transactions that are confirmed and/or affirmed on trade date, as well as ID transactions affirmed one day after trade date and remain affirmed through settlement date. *See* Release No. 34–68621 (Jan. 10, 2013), 78 FR 3960 (Jan. 17, 2013).

[8] ID transactions are included in the ID Offset only if they are on the opposite side of the market from the Member's net NSCC position (i.e., only if they reduce the net position). *See* Release No. 34–68621 (Jan. 10, 2013), 78 FR 3960 (Jan. 17, 2013).

[9] 12 U.S.C. 5461(b).

[10] *Id.*

[11] 12 U.S.C. 5464(a)(2).

[12] 12 U.S.C. 5464(b).

[13] Release No. 34–68080 (Oct. 22, 2012), 77 FR 66219 (Nov. 2, 2012).

enforce written policies and procedures that are reasonably designed to meet certain minimum requirements for their operations and risk management practices on an ongoing basis.[14] As such, it is appropriate for the Commission to review Advance Notices against these risk management standards that the Commission promulgated under Section 805(a) and the objectives and principles of these risk management standards as described in Section 805(b).

As a CCP, NSCC occupies an important role in the securities settlement system by interposing itself between counterparties to financial transactions, thereby reducing certain risks faced by Members and contributing to global financial stability. In this role, however, NSCC is necessarily subject to certain risks in the event of the default of a Member.

NSCC's proposal to eliminate ID Offsets, as described above, is designed to help mitigate the risk that NSCC will be under-collateralized if it ceases to act for a defaulting Member and is unable to complete the offsetting ID transactions in the time currently contemplated by its Clearing Fund calculation. Consistent with Section 805(a), the Commission believes this proposal promotes robust risk management, as well as the safety and soundness of NSCC's operations, while reducing systemic risks and supporting the stability of the broader financial system, by improving NSCC's risk management systems in preparation for a possible Member default via a more accurate representation of risk in its Clearing Fund calculation. As discussed above, NSCC's calculation of its Clearing Fund margin will be more accurate in that it will not include an assumption of trade closeouts following a Member insolvency with respect to trades for which there is a corresponding ID transaction.

Additionally, Commission Rule 17Ad–22(b)(1) regarding measurement and management of credit exposure,[15] adopted as part of the Clearing Agency Standards,[16] requires a CCP to establish, implement, maintain and enforce written policies and procedures reasonably designed to measure its credit exposures to its participants at least once a day and limit its exposures to potential losses from defaults by its participants under normal market conditions so that the operations of the CCP would not be disrupted and non-defaulting participants would not be exposed to losses that they cannot anticipate or control.[17] Here, as described in detail above, NSCC's proposal to eliminate ID Offsets should help to limit its exposure and non-defaulting members' exposure to potential losses from a defaulting Member, while minimizing disruption to its CCP operations, by more accurately reflecting its risks in the calculation of its Clearing Fund margin.

Furthermore, Commission Rules 17Ad–22(d)(4) regarding identification and mitigation of operational risk,[18] and 17Ad-22(d)(11) regarding default procedures,[19] also both adopted as part of the Clearing Agency Standards,[20] require that registered clearing agencies ''establish, implement, maintain and enforce written policies and procedures reasonably designed to, as applicable: * * * Identify sources of operational risk and minimize them through the development of appropriate systems, controls, and procedures * * *'',[21] and '' * * * establish default procedures that ensure that the clearing agency can take timely action to contain losses and liquidity pressures and to continue meeting its obligations in the event of a participant default,[22] respectively. Here, as described in detail above, the elimination of ID Offsets should help NSCC better minimize settlement risks and better ensure that it can contain losses and liquidity pressures, and meet its obligations in a timely fashion, by more accurately accounting for those risks in a Clearing Fund calculation that is designed to satisfy potential losses in a timely manner.

In its assessment of the Advance Notice, the Commission assessed whether the issues raised by the Lek Letters relate to the level or nature of risks presented by NSCC's proposal, which is designed to mitigate risks to NSCC, as discussed above. After evaluating NSCC's responses to the Lek Letters, the Commission believes that the issues raised in the Lek Letters relate to the potential competitive effects of NSCC's proposal, not the level or nature of risks presented by it.[23] As such, the issues raised by the Lek Letters are not considered within the context of this Notice of No Objection to the Advance Notice under Title VIII; rather, they are considered within an analysis of the proposal's consistency with Section 17A of the Exchange Act and the applicable rules and regulations thereunder, which the Commission did in its ''Order Approving Proposed Rule Change to Eliminate the Offset of [NSCC's] Obligations with Institutional Delivery Transactions that Settle at The Depository Trust Company for the Purpose of Calculating Its Clearing Fund Under Procedure XV of Its Rules & Procedures'' (File No. SR–NSCC–2012–10).[24]

IV. Conclusion

It is therefore noticed, pursuant to Section 806(e)(1)(I) of the Clearing Supervision Act,[25] that the Commission does not object to the proposed rule change described in the Advance Notice (File No. SR–NSCC–2012–810) and that NSCC be and hereby is authorized to implement the proposed rule change as of the date of this notice or the date of the ''Order Approving Proposed Rule Change to Eliminate the Offset of [NSCC's] Obligations with Institutional Delivery Transactions that Settle at The Depository Trust Company for the Purpose of Calculating Its Clearing Fund Under Procedure XV of Its Rules & Procedures'' (File No. SR–NSCC–2012–10),[26] whichever is later.

By the Commission.

Kevin M. O'Neill,

Deputy Secretary.

[FR Doc. 2013–08306 Filed 4–9–13; 8:45 am]

BILLING CODE 8011–01–P

[14] The Clearing Agency Standards are substantially similar to the risk management standards established by the Board of Governors of the Federal Reserve System (''Board of Governors'') governing the operations of designated FMUs that are not clearing entities and financial institutions engaged in designated activities for which the Commission or the Commodity Futures Trading Commission is the Supervisory Agency. *See* Financial Market Utilities, 77 FR 45907 (Aug. 2, 2012).

[15] 17 CFR 240.17Ad–22(b)(1).

[16] Release No. 34–68080 (Oct. 22, 2012), 77 FR 66219 (Nov. 2, 2012).

[17] 17 CFR 240.17Ad–22(b)(1).

[18] 17 CFR 240.17Ad–22(d)(4).

[19] 17 CFR 240.17Ad–22(d)(11).

[20] Release No. 34–68080 (Oct. 22, 2012), 77 FR 66219 (Nov. 2, 2012).

[21] 17 CFR 240.17Ad–22(d)(4).

[22] 17 CFR 240.17Ad–22(d)(11).

[23] *See* Lek Letters, *supra* note 3.

[24] *See* Release No. 34–69302 (Apr. 4, 2013).

[25] 12 U.S.C. 5465(e)(1)(I).

[26] Release No. 34–69302 (Apr. 4, 2013).

SECURITIES AND EXCHANGE COMMISSION

[Release No. 34–69299; File No. SR–NYSEArca-2013–31]

Self-Regulatory Organizations; NYSE Arca, Inc.; Notice of Filing and Immediate Effectiveness of Proposed Rule Change Establishing Certain Fees for the NYSE Arca Trades and NYSE Arca Realtime Reference Prices Market Data Products

April 4, 2013.

Pursuant to Section 19(b)(1) [1] of the Securities Exchange Act of 1934 (the ''Act'') [2] and Rule 19b-4 thereunder,[3] notice is hereby given that, on March 22, 2013, NYSE Arca, Inc. (the ''Exchange'' or ''NYSE Arca'') filed with the Securities and Exchange Commission (the ''Commission'') the proposed rule change as described in Items I, II, and III below, which Items have been prepared by the self-regulatory organization. The Commission is publishing this notice to solicit comments on the proposed rule change from interested persons.

I. Self-Regulatory Organization's Statement of the Terms of Substance of the Proposed Rule Change

The Exchange proposes to establish certain fees for the NYSE Arca Trades and NYSE Arca Realtime Reference Prices (''NYSE Arca RRP'') market data products. The text of the proposed rule change is available on the Exchange's Web site at *www.nyse.com,* at the principal office of the Exchange, and at the Commission's Public Reference Room.

II. Self-Regulatory Organization's Statement of the Purpose of, and Statutory Basis for, the Proposed Rule Change

In its filing with the Commission, the self-regulatory organization included statements concerning the purpose of, and basis for, the proposed rule change and discussed any comments it received on the proposed rule change. The text of those statements may be examined at the places specified in Item IV below. The Exchange has prepared summaries, set forth in sections A, B, and C below, of the most significant parts of such statements.

[1] 15 U.S.C.78s(b)(1).

[2] 15 U.S.C. 78a.

[3] 17 CFR 240.19b–4.

A. Self-Regulatory Organization's Statement of the Purpose of, and Statutory Basis for, the Proposed Rule Change

1. Purpose

The Exchange proposes to establish certain fees for the NYSE Arca Trades and NYSE Arca RRP market data products.

Background

Current NYSE Arca Trades Basic and Broadcast Fees

In 2009, the Securities and Exchange Commission (''SEC'' or the ''Commission'') approved the NYSE Arca Trades data feed and certain fees for it.[4] NYSE Arca Trades is a NYSE Arca-only market data feed that allows a vendor to redistribute on a real-time basis the same last sale information that the Exchange reports under the Consolidated Tape Association (''CTA'') Plan for inclusion in the CTA Plan's consolidated data streams and certain other related data elements. Specifically, NYSE Arca Trades includes the real-time last sale price, time, size, and bid/ask quotations for each security traded on the Exchange and a stock summary message. The stock summary message updates every minute and includes NYSE Arca's opening price, high price, low price, closing price, and cumulative volume for the security.

The Exchange currently charges NYSE Arca Trades data feed recipients an access fee of $750 per month, and a subscriber fee for professional subscribers of $10 per month per device, which may be counted, at the election of the vendor based on the number of ''Subscriber Entitlements'' [5] (collectively, these fees are referred to in this filing as ''NYSE Arca Trades basic fees''). In July 2012, the Exchange added a fee for distribution by television broadcasters (''Broadcast Fee''), which is $20,000 per month.[6] The television broadcast distribution method differs from the other distribution methods in that the data is available in a temporary, view-only mode on television screens.

[4] *See* Securities Exchange Act Release No. 59598 (Mar. 18, 2009), 74 FR 12919 (Mar. 25, 2009) (SR–NYSEArca–2009–05).

[5] *See* Securities Exchange Act Release No. 62188 (May 27, 2010), 75 FR 31484 (June 3, 2010) (SR–NYSEArca–2010–23).

[6] *See* Securities Exchange Act Release No. 67436 (July 13, 2012), 77 FR 42529 (July 19, 2012) (SR–NYSEArca–2012–73).

Current NYSE Arca RRP Fees

The Exchange also offers NYSE Arca RRP.[7] NYSE Arca RRP is designed for Web site distribution and includes the real-time last sale price and time for each security traded on the Exchange as well as the stock summary message, but does not include the size of each trade or bid/ask quotations.

The Exchange currently charges a flat fee of $30,000 per month with no user-based fees for NYSE Arca RRP. For that fee, the vendor may provide NYSE Arca RRP to an unlimited number of the vendor's subscribers and customers without having to differentiate between professional subscribers and nonprofessional subscribers, without having to account for the extent of access to the data, and without having to report the number of users. As an alternative to the NYSE Arca RRP flat monthly fee, the Exchange offers an alternative fee of $.004 for each real-time reference price that a vendor disseminates to its customers (''per query fee''), which is capped at $30,000 per month, the same amount as the flat fee. In order to take advantage of the per-query fee, a vendor must document that it has the ability to measure accurately the number of queries and must have the ability to report aggregate query quantities on a monthly basis. The per-query fee is imposed on vendors, not end-users. There are currently no fees for NYSE Arca RRP that are specifically designed for television or mobile device distribution.

NYSE Arca RRP was created to allow distribution of a last sale data product for reference purposes on Web sites at a low cost that would facilitate distribution to millions of retail investors and relieve vendors of administrative burdens.[8] NYSE Arca RRP is an alternative to delayed prices and is not intended for use in trading decisions.[9] As such, distribution of NYSE Arca RRP is subject to certain requirements. Specifically, vendors may not provide NYSE Arca RRP in a context in which a trading or order routing decision can be implemented unless CTA data is available in an equivalent manner, must label NYSE Arca RRP as NYSE Arca-only data, and must provide a hyperlinked notice similar to the one provided for CTA delayed data.[10]

[7] *See* Securities Exchange Act Release No. 61404 (Jan. 22, 2010), 75 FR 5363 (Feb. 2, 2010) (SR–NYSEArca–2009–108).

[8] *See* Securities Exchange Act Release No. 59790 (Apr. 20, 2009), 74 FR 18758 (Apr. 24, 2009) (SR–NYSEArca–2009–32).

[9] *Id.* at 18759.

[10] *Id.*

New Digital Media Offerings

The Exchange recently created a new version of NYSE Arca Trades, NYSE Arca Trades Digital Media, which will allow market data vendors, television broadcasters, Web site and mobile device service providers, and others to distribute the product to their customers for viewing via television, Web site, and mobile devices.[11] The NYSE Arca Trades Digital Media product includes access to the real-time last sale price, time, and size for each security traded on the Exchange as well as the stock summary message, but does not include access to the bid/ask quotation that is included with NYSE Arca Trades product under the basic fees or Broadcast Fee. Vendors may not provide the NYSE Arca Trades Digital Media product in a context in which a trading or order routing decision can be implemented unless CTA data is available in an equivalent manner, must label the product as NYSE Arca-only data, and must provide a hyperlinked notice similar to the one provided for CTA delayed data.

The Exchange also will offer NYSE Arca RRP Digital Media so that NYSE Arca RRP will be available for distribution in the same manner as NYSE Arca Trades Digital Media, via television, Web site, and mobile devices. The data elements of NYSE Arca RRP (last sale price, time, and stock summary message) will remain unchanged from today's NYSE Arca RRP product offering.

The Exchange has established these Digital Media products in recognition of the demand for a more seamless and easier-to-administer data distribution model that takes into account the expanded variety of media and communication devices that investors utilize today. For example, a television broadcaster could display the NYSE Arca Trades data during market-related television programming and on its Web site and allow its viewers to view the data via their mobile devices, creating a more seamless distribution model that will allow investors more choice in how they receive and view market data.

Proposed Digital Media Fees

The NYSE Arca Trades Digital Media Enterprise Fee will be $20,000 per month, and the NYSE Arca RRP Digital Media Enterprise Fee will be $15,000 per month. The Exchange notes that the NYSE Arca RRP Digital Media Enterprise Fee is lower than NYSE Arca Trades Digital Media Enterprise Fee because it does not include trade size data. Vendors that pay these fees will not be required to pay an access fee, but they will be required to pay the redistribution fees as described below. As with the current NYSE Arca RRP product and the Broadcast Fee, a vendor paying the Digital Media Enterprise Fee may deliver the NYSE Arca Trades and NYSE Arca RRP data to an unlimited number of television, Web site, and mobile device viewers without having to differentiate between professional subscribers and nonprofessional subscribers, without having to account for the extent of access to the data, and without having to report the number of users.

For NYSE Arca Trades, the television-only $20,000 Broadcast Fee option will no longer be available. For NYSE Arca RRP, web-only distribution for $30,000 per month will no longer be available. The Exchange does not believe that any customers would elect these options in light of the broader distribution offered with the new Digital Media Enterprise Fees and the substantially lower price for NYSE Arca RRP Digital Media.

The Exchange will continue to offer the $.004 per query fee for NYSE Arca RRP to any vendor that so chooses, but the Exchange proposes to reduce the cap to $15,000, the same amount as the NYSE Arca RRP Digital Media Enterprise Fee. Vendors and subscribers receiving NYSE Arca Trades via traditional distribution methods, e.g. a Bloomberg terminal or a broker-dealer customer Web site that permits order entry, will not be eligible for Digital Media Enterprise Fees and will continue to pay NYSE Arca Trades basic fees.

Redistribution Fees

The Exchange also proposes to charge a redistribution fee of $750 per month for NYSE Arca Trades and $1,500 per month for NYSE Arca RRP.[12] The redistribution fees will apply regardless of whether the customer is eligible for the Digital Media Enterprise Fees or NYSE Arca Trades basic fees.

Operative Date

The Digital Media Enterprise Fees will be operative on April 1, 2013 and the redistribution fees will be operative on May 1, 2013.

2. Statutory Basis

The Exchange believes that the proposed rule change is consistent with the provisions of Section 6 of the Act,[13] in general, and Sections 6(b)(4) and 6(b)(5) of the Act,[14] in particular, in that it provides an equitable allocation of reasonable fees among users and recipients of the data and is not designed to permit unfair discrimination among customers, issuers, and brokers.

The proposed NYSE Arca Trades Digital Media Enterprise Fee of $20,000 per month and NYSE Arca RRP Digital Media Enterprise Fee of $15,000 per month are reasonable because they will offer a means for vendors to more widely distribute NYSE Arca Trades and NYSE Arca RRP data to investors for informational purposes at the same cost (in the case of NYSE Arca Trades) or a lower cost (in the case of NYSE Arca RRP) than is available today. Currently, NYSE Arca Trades can be distributed via television for a $20,000 monthly fee, but that fee does not include Web site or mobile device distribution. NYSE Arca RRP can be distributed over Web sites for a $30,000 monthly fee, but that fee does not include television or mobile device distribution. The Exchange believes that the proposed Digital Media Enterprise Fees are reasonable because in certain instances they are less than the fees charged by another exchange for a similar product.[15] The Exchange also believes that it is reasonable to charge more for NYSE Arca Trades Digital Media than NYSE Arca RRP Digital Media because the former includes trade size data. The Exchange believes that the price reduction for NYSE Arca RRP coupled with the broader distribution options will make the product more attractive and result in its greater availability to investors. The Exchange believes that reducing the cap for the per query fee from $30,000 to $15,000 is reasonable because it will be equal to the proposed monthly NYSE Arca RRP Digital Media Enterprise Fee. The Exchange believes that reducing the cap for the per query fee is equitable and not unfairly discriminatory because it is designed to ensure that vendors that elect the per query fee do not pay more for real-time reference price data than vendors that pay a flat fee for unlimited use.

The proposed Digital Media Enterprise Fees also are equitable and not unfairly discriminatory because they will be applied uniformly to market data vendors, television broadcasters, Web site and mobile service providers, or any other person that distributes the data on

[11] *See* SR–NYSEArca–2013–30.

[12] A redistributor is a vendor or any other person that provides an NYSE Arca data product to a data recipient or to any system that a data recipient uses, irrespective of the means of transmission or access.

[13] 15 U.S.C. 78f(b).

[14] 15 U.S.C. 78f(b)(4), (5).

[15] The NASDAQ Stock Market offers proprietary last sale data products for distribution over the Internet and television under alternative fee schedules that are subject to a maximum fee is $50,000 per month. *See* NASDAQ Rule 7039(b).

the basis described in this filing. The Exchange believes that it is appropriate to offer a lower cost fee structure that is designed to facilitate broader media distribution of the NYSE Arca Trades and NYSE Arca RRP data for informational purposes because it will benefit investors generally. Moreover, the value of the data distributed generally in the media for informational purposes differs from when it is distributed in manner in which it can immediately be utilized for trading decisions. The Exchange believes that the data is more valuable in that latter context, and as such, it is fair and equitable to have differential pricing for it.

In establishing the Digital Media Enterprise Fees, the Exchange recognizes that there is demand for a more seamless and easier-to-administer data distribution model that takes into account the expanded variety of media and communication devices that investors utilize today. As is the case with the current NYSE Arca RRP product and the Broadcast Fee, the Exchange believes that the Digital Media Enterprise Fee will be easy to administer because vendors that purchase it will not have to differentiate between professional subscribers and nonprofessional subscribers, account for the extent of access to the data, or report the number of users; this is a significant reduction in vendors' administrative burdens and is a significant value to vendors. For example, a television broadcaster could display the NYSE Arca Trades Digital Media data during market-related television programming and on its Web site and allow its viewers to view the data via their mobile devices, creating a more seamless distribution model that will allow investors more choice in how they receive and view market data, all without having to account for and/or measure who accesses the data and how much they do so. By easing administration, broadening distribution channels, and, in the case of NYSE Arca RRP, reducing prices, the Exchange believes that more vendors will choose to offer NYSE Arca Trades and NYSE Arca RRP, thereby expanding the distribution of market data for the benefit of investors.

The proposed redistribution fees also are reasonable because they are comparable to other redistribution fees charged by the Exchange as well as other exchanges.[16] The Exchange believes it is reasonable to charge redistribution fees because vendors receive value from redistributing the data in their business products for their customers. The redistribution fees also are equitable and not unfairly discriminatory because they will be charged on an equal basis only to those vendors that choose to redistribute the data.

The decision of the United States Court of Appeals for the District of Columbia Circuit in *NetCoalition* v. *SEC,* 615 F.3d 525 (DC Cir. 2010), upheld the Commission's reliance upon the existence of competitive market mechanisms to set reasonable and equitably allocated fees for proprietary market data:

> In fact, the legislative history indicates that the Congress intended that the market system 'evolve through the interplay of competitive forces as unnecessary regulatory restrictions are removed' and that the SEC wield its regulatory power 'in those situations where competition may not be sufficient,' such as in the creation of a 'consolidated transactional reporting system.'

Id. at 535 (quoting H.R. Rep. No. 94–229 at 92 (1975), *as reprinted in* 1975 U.S.C.C.A.N. 323). The court agreed with the Commission's conclusion that ''Congress intended that 'competitive forces should dictate the services and practices that constitute the U.S. national market system for trading equity securities.' ''[17]

As explained below in the Exchange's Statement on Burden on Competition, the Exchange believes that there is substantial evidence of competition in the marketplace for data and that the Commission can rely upon such evidence in concluding that the fees established in this filing are the product of competition and therefore satisfy the relevant statutory standards.[18] In addition, the existence of alternatives to NYSE Arca Trades and NYSE Arca RRP, including real-time consolidated data, free delayed consolidated data, and proprietary last sale data from other sources, as described below, further ensures that the Exchange cannot set unreasonable fees, or fees that are unreasonably discriminatory, when vendors and subscribers can elect such alternatives.

As the *NetCoalition* decision noted, the Commission is not required to undertake a cost-of-service or ratemaking approach, and the Exchange incorporates by reference into this proposed rule change its analysis of this topic in another rule filing.[19]

For these reasons, the Exchange believes that the proposed fees are reasonable, equitable, and not unfairly discriminatory.

B. Self-Regulatory Organization's Statement on Burden on Competition

The Exchange does not believe that the proposed rule change will impose any burden on competition that is not necessary or appropriate in furtherance of the purposes of the Act. An exchange's ability to price its proprietary data feed products is constrained by (1) actual competition for the sale of proprietary market data products, (2) the existence of inexpensive real-time consolidated data and free delayed consolidated data, and (3) the inherent contestability of the market for proprietary last sale data and the joint product nature of exchange platforms.

The Existence of Actual Competition. The market for proprietary data products is currently competitive and inherently contestable because there is fierce competition for the inputs necessary to the creation of proprietary data and strict pricing discipline for the proprietary products themselves. Numerous exchanges compete with each other for listings and order flow and sales of market data itself, providing virtually limitless opportunities for entrepreneurs who wish to compete in any or all of those areas, including producing and distributing their own market data. Proprietary data products are produced and distributed by each individual exchange, as well as other entities, in a vigorously competitive market.

Competitive markets for listings, order flow, executions, and transaction reports provide pricing discipline for the inputs of proprietary data products and therefore constrain markets from overpricing proprietary market data. The U.S. Department of Justice also has acknowledged the aggressive

[16] For example, the Exchange and NYSE MKT LLC (''NYSE MKT'') charge redistribution fees of $2,000 per month for certain proprietary options market data products. *See* Securities Exchange Act Release Nos. 68005 (Oct. 9, 2012), 77 FR 63362 (Oct. 16, 2012) (SR–NYSEArca–2012–106), and 68004 (Oct. 9, 2012), 77 FR 62582 (Oct. 15, 2012) (SR–NYSEMKT–2012–49). The Exchange charges a $3,000 per month redistribution fee for the NYSE Arca Integrated Feed. *See* Securities Exchange Act Release No. 66128 (Jan. 10, 2012), 77 FR 2331 (Jan. 17, 2012) (SR–NYSEArca–2011–96). The Options Price Reporting Authority's Fee Schedule, available at *http://www.opradata.com/pdf/fee_schedule.pdf,* includes an ''Internet Service Only'' redistribution fee ($650/month) and standard redistribution fee ($1,500/month).

[17] *NetCoalition,* 615 F.3d at 535.

[18] Section 916 of the Dodd-Frank Wall Street Reform and Consumer Protection Act of 2010 (the ''Dodd-Frank Act'') amended paragraph (A) of Section 19(b)(3) of the Act, 15 U.S.C. 78s(b)(3), to make clear that all exchange fees for market data may be filed by exchanges on an immediately effective basis.

[19] *See* Securities Exchange Act Release No. 63291 (Nov. 9, 2010), 75 FR 70311 (Nov. 17, 2010) (SR–NYSEArca–2010–97).

competition among exchanges, including for the sale of proprietary market data itself. In announcing that the bid for NYSE Euronext by NASDAQ OMX Group Inc. and IntercontinentalExchange Inc. had been abandoned, Assistant Attorney General Christine Varney stated that exchanges ''compete head to head to offer real-time equity data products. These data products include the best bid and offer of every exchange and information on each equity trade, including the last sale.'' [20]

It is common for broker-dealers to further exploit this recognized competitive constraint by sending their order flow and transaction reports to multiple markets, rather than providing them all to a single market. As a 2010 Commission Concept Release noted, the ''current market structure can be described as dispersed and complex'' with ''trading volume … dispersed among many highly automated trading centers that compete for order flow in the same stocks'' and ''trading centers offer[ing] a wide range of services that are designed to attract different types of market participants with varying trading needs.'' [21]

In addition, in the case of products that are distributed through market data vendors, the market data vendors themselves provide additional price discipline for proprietary data products because they control the primary means of access to certain end users. These vendors impose price discipline based upon their business models. For example, vendors that assess a surcharge on data they sell are able to refuse to offer proprietary products that their end users do not or will not purchase in sufficient numbers. Internet portals, such as Google, impose price discipline by providing only data that they believe will enable them to attract ''eyeballs'' that contribute to their advertising revenue. Similarly, television broadcasters and Web site and mobile device service providers will not elect to make available NYSE Arca Trades or NYSE Arca RRP unless they believe it will help them attract or maintain viewers/customers for their television, Web site, or mobile device offerings. All of these operate as constraints on pricing proprietary data products.

Joint Platform. Transaction execution and proprietary data products are complementary in that market data is both an input and a byproduct of the execution service. In fact, market data and trade executions are a paradigmatic example of joint products with joint costs. The decision whether and on which platform to post an order will depend on the attributes of the platforms where the order can be posted, including the execution fees, data quality, and price and distribution of their data products. The more trade executions a platform does, the more valuable its market data products become.

The costs of producing market data include not only the costs of the data distribution infrastructure, but also the costs of designing, maintaining, and operating the exchange's transaction execution platform and the cost of regulating the exchange to ensure its fair operation and maintain investor confidence. The total return that a trading platform earns reflects the revenues it receives from both products and the joint costs it incurs. Moreover, an exchange's broker-dealer customers view the costs of transaction executions and market data as a unified cost of doing business with the exchange.

Other market participants have noted that the liquidity provided by the order book, trade execution, core market data, and non-core market data are joint products of a joint platform and have common costs.[22] The Exchange agrees with and adopts those discussions and the arguments therein. The Exchange also notes that the economics literature confirms that there is no way to allocate common costs between joint products that would shed any light on competitive or efficient pricing.[23]

Analyzing the cost of market data product production and distribution in isolation from the cost of all of the inputs supporting the creation of market data and market data products will inevitably underestimate the cost of the data and data products. Thus, because it is impossible to obtain the data inputs to create market data products without a fast, technologically robust, and well-regulated execution system, system costs and regulatory costs affect the price of both of obtaining the market data itself and creating and distributing market data products. It would be equally misleading, however, to attribute all of an exchange's costs to the market data portion of an exchange's joint products. Rather, all of an exchange's costs are incurred for the unified purposes of attracting order flow, executing and/or routing orders, and generating and selling data about market activity. The total return that an exchange earns reflects the revenues it receives from the joint products and the total costs of the joint products.

The level of competition and contestability in the market is evident in the numerous alternative venues that compete for order flow, including 12 equities self-regulatory organization (''SRO'') markets, as well as internalizing broker-dealers (''BDs'') and various forms of alternative trading systems (''ATSs''), including dark pools and electronic communication networks (''ECNs''). Competition among trading platforms can be expected to constrain the aggregate return that each platform earns from the sale of its joint products, but different platforms may choose from a range of possible, and equally reasonable, pricing strategies as the means of recovering total costs. For example, some platforms may choose to

[20] Press Release, U.S. Department of Justice, Assistant Attorney General Christine Varney Holds Conference Call Regarding NASDAQ OMX Group Inc. and IntercontinentalExchange Inc. Abandoning Their Bid for NYSE Euronext (May 16, 2011), *available at http://www.justice.gov/iso/opa/atr/speeches/2011/at-speech-110516.html.*

[21] Concept Release on Equity Market Structure, Securities Exchange Act Release No. 61358 (Jan. 14, 2010), 75 FR 3594 (Jan. 21, 2010) (File No. S7–02–10). This Concept Release included data from the third quarter of 2009 showing that no market center traded more than 20% of the volume of listed stocks, further evidencing the dispersal of and competition for trading activity. *Id.* at 3598.

[22] *See* Securities Exchange Act Release No. 62887 (Sept. 10, 2010), 75 FR 57092, 57095 (Sept. 17, 2010) (SR-Phlx-2010–121); Securities Exchange Act Release No. 62907 (Sept. 14, 2010), 75 FR 57314, 57317 (Sept. 20, 2010) (SR–NASDAQ–2010–110); and Securities Exchange Act Release No. 62908 (Sept. 14, 2010), 75 FR 57321, 57324 (Sept. 20, 2010) (SR–NASDAQ–2010–111) (''all of the exchange's costs are incurred for the unified purposes of attracting order flow, executing and/or routing orders, and generating and selling data about market activity. The total return that an exchange earns reflects the revenues it receives from the joint products and the total costs of the joint products.''); *see also* August 1, 2008 Comment Letter of Jeffrey S. Davis, Vice President and Deputy General Counsel, NASDAQ OMX Group, Inc., Statement of Janusz Ordover and Gustavo Bamberger (''because market data is both an input to and a byproduct of executing trades on a particular platform, market data and trade execution services are an example of 'joint products' with 'joint costs.'''), attachment at pg. 4, *available at www.sec.gov/comments/34-57917/3457917-12.pdf.*

[23] *See generally* Mark Hirschey, Fundamentals of Managerial Economics, at 600 (2009) (''It is important to note, however, that although it is possible to determine the separate marginal costs of goods produced in variable proportions, it is impossible to determine their individual average costs. This is because common costs are expenses necessary for manufacture of a joint product. Common costs of production—raw material and equipment costs, management expenses, and other overhead—cannot be allocated to each individual by-product on any economically sound basis.* * * Any allocation of common costs is wrong and arbitrary.''). This is not new economic theory. *See, e.g.,* F. W. Taussig, ''A Contribution to the Theory of Railway Rates,'' *Quarterly Journal of Economics* V(4) 438, 465 (July 1891) (''Yet, surely, the division is purely arbitrary. These items of cost, in fact, are jointly incurred for both sorts of traffic; and I cannot share the hope entertained by the statistician of the Commission, Professor Henry C. Adams, that we shall ever reach a mode of apportionment that will lead to trustworthy results.'').

pay rebates to attract orders, charge relatively low prices for market data products (or provide market data products free of charge), and charge relatively high prices for accessing posted liquidity. Other platforms may choose a strategy of paying lower rebates (or no rebates) to attract orders, setting relatively high prices for market data products, and setting relatively low prices for accessing posted liquidity. In this environment, there is no economic basis for regulating maximum prices for one of the joint products in an industry in which suppliers face competitive constraints with regard to the joint offering.

Existence of Alternatives. The large number of SROs, BDs, and ATSs that currently produce proprietary data or are currently capable of producing it provides further pricing discipline for proprietary data products. Each SRO, ATS, and BD is currently permitted to produce proprietary data products, and many currently do or have announced plans to do so, including but not limited to the Exchange, NYSE, NYSE MKT, NASDAQ OMX, BATS, and Direct Edge.

The fact that proprietary data from ATSs, BDs, and vendors can bypass SROs is significant in two respects. First, non-SROs can compete directly with SROs for the production and sale of proprietary data products. Second, because a single order or transaction report can appear in an SRO proprietary product, a non-SRO proprietary product, or both, the amount of data available via proprietary products is greater in size than the actual number of orders and transaction reports that exist in the marketplace. Because market data users can thus find suitable substitutes for most proprietary market data products, a market that overprices its market data products stands a high risk that users may substitute another source of market data information for its own.

Moreover, consolidated data provides two additional measures of pricing discipline for proprietary data products that are a subset of the consolidated data stream. First, the consolidated data is widely available in real-time at $1 per month for non-professional users. Second, consolidated data is also available at no cost with a 15- or 20-minute delay. Because consolidated data contains marketwide information, it effectively places a cap on the fees assessed for proprietary data (such as last sale data) that is simply a subset of the consolidated data. The mere availability of low-cost or free consolidated data provides a powerful form of pricing discipline for proprietary data products that contain data elements that are a subset of the consolidated data by highlighting the optional nature of proprietary products.

Those competitive pressure imposed by available alternatives are evident in the Exchange's proposed pricing. The Digital Media Enterprise Fees, which will permit broader distribution at the same price (in the case of NYSE Arca Trades) or a lower price (in the case of NYSE Arca RRP) than is available today, also are lower than the maximum fee for a similar product offered by another exchange [24] and lower than the television distribution fee charged by CTA.[25] The proposed redistribution fees also are comparable to the Exchange's and another exchange's similar fees.[26]

In addition to the competition and price discipline described above, the market for proprietary data products is also highly contestable because market entry is rapid and inexpensive. The history of electronic trading is replete with examples of entrants that swiftly grew into some of the largest electronic trading platforms and proprietary data producers: Archipelago, Bloomberg Tradebook, Island, RediBook, Attain, TrackECN, BATS Trading and Direct Edge. Today, BATS and Direct Edge provide certain market data at no charge on their Web sites in order to attract more order flow, and use revenue rebates from resulting additional executions to maintain low execution charges for their users.[27]

Further, data products are valuable to certain end users only insofar as they provide information that end users expect will assist them or their customers in tracking prices and market trends. The Exchange believes that the Digital Media Enterprise Fees, which will permit wider distribution of last sale information at either the same or a lower price, may encourage more vendors to choose to offer NYSE Arca Trades or NYSE Arca RRP over multiple communication devices and thereby benefit public investors and other market participants by providing them with more convenient ways to track prices and market trends during the course of the trading day. The Exchange further believes that only vendors that expect to derive a reasonable benefit from redistributing NYSE Arca Trades and NYSE Arca RRP data will choose to become redistributors and pay the attendant monthly fees.

In establishing the proposed fees, the Exchange considered the competitiveness of the market for proprietary data and all of the implications of that competition. The Exchange believes that it has considered all relevant factors and has not considered irrelevant factors in order to establish fair, reasonable, and not unreasonably discriminatory fees and an equitable allocation of fees among all users. The existence of numerous alternatives to the Exchange's products, including real-time consolidated data, free delayed consolidated data, and proprietary data from other sources, ensures that the Exchange cannot set unreasonable fees, or fees that are unreasonably discriminatory, when vendors and subscribers can elect these alternatives or choose not to purchase a specific proprietary data product if its cost to purchase is not justified by the returns any particular vendor or subscriber would achieve through the purchase.

C. Self-Regulatory Organization's Statement on Comments on the Proposed Rule Change Received From Members, Participants or Others

No written comments were solicited or received with respect to the proposed rule change.

III. Date of Effectiveness of the Proposed Rule Change and Timing for Commission Action

The foregoing rule change is effective upon filing pursuant to Section 19(b)(3)(A) [28] of the Act and subparagraph (f)(2) of Rule 19b–4 [29] thereunder, because it establishes a due, fee, or other charge imposed by the Exchange.

At any time within 60 days of the filing of such proposed rule change, the Commission summarily may temporarily suspend such rule change if it appears to the Commission that such action is necessary or appropriate in the public interest, for the protection of investors, or otherwise in furtherance of the purposes of the Act. If the Commission takes such action, the Commission shall institute proceedings under Section 19(b)(2)(B) [30] of the Act to determine whether the proposed rule change should be approved or disapproved.

[24] *See supra* n.15.

[25] *See* CTA Plan dated July 1, 2012, Exhibit E, Schedule A–1 at n.6 (television distribution fee capped at $125,000 per month in 2010, with certain increases permitted thereafter) *available at http://www.nyxdata.com/CTA.*

[26] *See supra* n.16.

[27] This is simply a securities market-specific example of the well-established principle that in certain circumstances more sales at lower margins can be more profitable than fewer sales at higher margins; this example is additional evidence that market data is an inherent part of a market's joint platform.

[28] 15 U.S.C. 78s(b)(3)(A).

[29] 17 CFR 240.19b–4(f)(2).

[30] 15 U.S.C. 78s(b)(2)(B).

IV. Solicitation of Comments

Interested persons are invited to submit written data, views, and arguments concerning the foregoing, including whether the proposed rule change is consistent with the Act. Comments may be submitted by any of the following methods:

Electronic Comments

- Use the Commission's Internet comment form (*http://www.sec.gov/rules/sro.shtml*); or
- Send an email to *rule-comments@sec.gov.* Please include File Number SR–NYSEArca-2013–31 on the subject line.

Paper Comments

- Send paper comments in triplicate to Elizabeth M. Murphy, Secretary, Securities and Exchange Commission, 100 F Street NE., Washington, DC 20549–1090.

All submissions should refer to File Number SR–NYSEArca-2013–31. This file number should be included on the subject line if email is used.

To help the Commission process and review your comments more efficiently, please use only one method. The Commission will post all comments on the Commission's Internet Web site (*http://www.sec.gov/rules/sro.shtml*). Copies of the submission, all subsequent amendments, all written statements with respect to the proposed rule change that are filed with the Commission, and all written communications relating to the proposed rule change between the Commission and any person, other than those that may be withheld from the public in accordance with the provisions of 5 U.S.C. 552, will be available for Web site viewing and printing in the Commission's Public Reference Room on official business days between the hours of 10:00 a.m. and 3:00 p.m. Copies of such filing also will be available for inspection and copying at the principal offices of NYSE. All comments received will be posted without change; the Commission does not edit personal identifying information from submissions. You should submit only information that you wish to make available publicly. All submissions should refer to File Number SR–NYSEArca-2013–31, and should be submitted on or before May 1, 2013.

For the Commission, by the Division of Trading and Markets, pursuant to delegated authority.[31]

Kevin M. O'Neill,

Deputy Secretary.

[FR Doc. 2013–08325 Filed 4–9–13; 8:45 am]

BILLING CODE 8011–01–P

[31] 17 CFR 200.30–3(a)(12).

SECURITIES AND EXCHANGE COMMISSION

[Release No. 34–69294; File No. SR–NYSEMKT–2013–33]

Self-Regulatory Organizations; NYSE MKT LLC; Notice of Filing and Immediate Effectiveness of Proposed Rule Change Amending NYSE MKT Rule 1000

April 4, 2013.

Pursuant to Section 19(b)(1)[1] of the Securities Exchange Act of 1934 (the ''Act'')[2] and Rule 19b–4 thereunder,[3] notice is hereby given that on April 2, 2013, NYSE MKT LLC (the ''Exchange'' or ''NYSE MKT'') filed with the Securities and Exchange Commission (the ''Commission'') the proposed rule change as described in Items I and II below, which Items have been prepared by the self-regulatory organization. The Commission is publishing this notice to solicit comments on the proposed rule change from interested persons.

I. Self-Regulatory Organization's Statement of the Terms of Substance of the Proposed Rule Change

The Exchange proposes to phase out the functionality associated with liquidity replenishment points (''LRPs'') to coincide with the implementation of the Limit Up—Limit Down Plan (the ''Plan'') by adding language to NYSE MKT Rule 1000—Equities that, beginning on April 8, 2013, LRPs will no longer be in effect for Tier 1 NMS Stocks, and on the earlier of August 1, 2013 or such date as Phase II of the Limit Up—Limit Down Plan is implemented, LRPs will no longer be in effect for all NMS Stocks. The text of the proposed rule change is available on the Exchange's Web site at *www.nyse.com,* at the principal office of the Exchange, on the Commission's Web site at *http://www.sec.gov,* and at the Commission's Public Reference Room.

[1] 15 U.S.C.78s(b)(1).

[2] 15 U.S.C. 78a.

[3] 17 CFR 240.19b–4.

II. Self-Regulatory Organization's Statement of the Purpose of, and Statutory Basis for, the Proposed Rule Change

In its filing with the Commission, the self-regulatory organization included statements concerning the purpose of, and basis for, the proposed rule change and discussed any comments it received on the proposed rule change. The text of those statements may be examined at the places specified in Item IV below. The Exchange has prepared summaries, set forth in sections A, B, and C below, of the most significant parts of such statements.

A. Self-Regulatory Organization's Statement of the Purpose of, and Statutory Basis for, the Proposed Rule Change

1. Purpose

The Exchange proposes to phase out the functionality associated with LRPs to coincide with the implementation of the Plan by amending NYSE MKT Rule 1000—Equities to provide that, beginning on April 8, 2013, LRPs will no longer be in effect for Tier 1 NMS Stocks, and beginning on the earlier of, August 1, 2013 or such date as Phase II of the Limit Up—Limit Down Plan is implemented, LRPs will no longer be in effect for all NMS stocks.

The LRP mechanism was approved in 2006 to address market volatility on the New York Stock Exchange, and approved for use on the Exchange in 2008.[4] Specifically, the Exchange uses LRPs, which are triggered by rapid price movements over a short period of time, to moderate volatility in a security by temporarily converting the electronic market for the security into an auction market to afford new trading interests the opportunity to add liquidity. The Exchange additionally believes that LRPs were effective in moderating some of the impact from the events of May 6, 2010, for NYSE MKT trading customers as evidenced by the lack of erroneous trades on the Exchange. LRPs also served as the basis for the Plan,[5] as well as the implementation of the short sale circuit breakers. Indeed, for many years, LRPs have been a key selling point of the Exchange to both investors and listed companies who, like the Exchange, believe that stable prices further the purposes of protecting

[4] *See* Securities Exchange Act Release No. 53539 (March 22, 2006), 71 FR 16353 (March 31, 2006) (SR–NYSE–2004–05); Securities Exchange Act Release No. 58265 (July 30, 2008), 73 FR 46075 (Aug. 7, 2008) (SR-Amex-2008–63).

[5] *See* Securities Exchange Act Release No. 67091 (May 31, 2012), 77 FR 33498 (June 6, 2012) (''LULD Release'').

investors against unnecessary price swings thereby enhancing investor confidence in the U.S. securities markets. LRPs have delivered concrete benefits to public investors in the many erroneous or aberrant trades they have prevented, and have allowed the Exchange to communicate in an orderly way with issuers during periods of market stress.

Nevertheless, the Exchange proposes to phase out LRPs as a result of the scheduled implementation of the Plan, which was adopted in response to the market disruption of May 6, 2010. Specifically, in addressing comments focused on the relationship between the Plan and exchange-specific volatility mechanisms—such as the NYSE MKT's LRPs—the Commission stated that it was ''aware of the potential for unnecessary complexity that could result if the Plan were adopted, and exchange-specific volatility mechanisms were retained'' and ''[t]o this end, the Commission *expects* that upon implementation of the Plan, such exchange-specific volatility mechanisms would be *discontinued* by the respective exchanges.''[6]

Although the Exchange understands the need for industry-wide responses to address extraordinary volatility events such as the market disruption that occurred on May 6, 2010, the Exchange does not agree that such initiatives should come at the expense of existing investor protection mechanisms, particularly without any impact analysis, because such initiatives can have unintended consequences to the detriment of investors and the marketplace as a whole. In light of the fact that only *potential* concerns were noted and there is no evidence of systemic problems that would be caused by simultaneously operating the Plan and LRPs, the Exchange continues to believe that data could have been collected during the Plan pilot period and would have served as an excellent testing ground to determine if both the Limit Up—Limit Down bands as well as the LRP bands could function effectively together. The Exchange believes that only after such careful monitoring could an informed determination be made that accurately assesses whether the functionalities were redundant or conflicting so as to warrant continuing with one or the other, or both. The Plan pilot period could also have afforded the Commission and the Exchange the ability to compile and analyze data that would contribute to the making of an informed decision with respect to the merits of both programs.

Indeed, there is nothing particularly complex about how LRPs would have operated alongside the Plan. As the LRP bands are generally narrower than the Limit Up—Limit Down bands, LRPs might have continued to serve their current purpose of creating a temporary auction market buffer to rapid and extraordinary price movements occurring in the electronic market. They would have been triggered within Limit Up—Limit Down bands, would have applied only to the Exchange, and trading on away markets could have continued to occur because the NYSE MKT quotation is not protected during an LRP. Moreover, the Exchange believes that any incremental complexity the LRPs would have added to the operation of the Plan would have been outweighed substantially by their proven effectiveness in minimizing rapid price movements that are driven by erroneous orders.

Furthermore, the Exchange wishes to respectfully, but strenuously, object not only to the substance of the Commission's decision to effectively insist that the Exchange abandon LRPs, but also the policy implications of the decision. From a policy perspective, the Commission's required removal of LRPs would seem to embody an effort to force markets ''into a single mold''[7] for purposes of addressing extraordinary volatility, and to obstruct the development of ''subsystems within the national market system,'' objectives which are inconsistent with the 1975 Act Amendments.[8]

Nevertheless, the Exchange proposes to phase out[9] the LRP functionality for securities as they are covered by the Plan in coordination with the Plan's Phase I and Phase II implementation timelines.[10] LRPs will remain in place for any securities not covered by the Plan.

As such, the Exchange proposes to add rule language to NYSE MKT Rule 1000—Equities that, beginning on April 8, 2013, LRPs will no longer be in effect for Tier 1 NMS Stocks, and on the earlier of August 1, 2013 or such date as Phase II of the Limit Up—Limit Down Plan is implemented, LRPs will no longer be in effect for all NMS Stocks. In order to accommodate the phasing out process, prior to the implementation of Phase II of the Plan, the Exchange will file a separate rule proposal deleting the references to LRP functionality in NYSE MKT Rules 60—Equities, 79A—Equities, 104—Equities, 128—Equities, 501—Equities, 508—Equities, 512—Equities, and 1000—Equities. The Exchange will apprise members and member organizations of the dates of the discontinuation of the LRP functionality via an Information Memorandum. The Exchange plans to revisit the merits of discontinuing the LRP functionality after the initial Plan pilot period has ended and may file to reincorporate the LRP functionality at that time as well.

2. Statutory Basis

The Exchange believes that the proposed rule change is consistent with the requirements of Section 6(b) of the Act,[11] in general, and Section 6(b)(5) of the Act,[12] in particular, in that it is designed to foster cooperation and coordination with persons engaged in regulating, clearing, settling, processing information with respect to, and facilitating transactions in securities, to remove impediments to and perfect the mechanism for a free and open market and a national market system. However, the Exchange is discontinuing the LRP functionality and deleting corresponding rule references to implement changes that the Commission has requested and expects

[6] *Id.* at n. 182 (emphasis added).

[7] *See* H.R. Rep. No. 94–123, at 51 (1975) (emphasis added) (''The objective is to enhance competition and to allow economic force, interacting within a fair regulatory field, to arrive at appropriate variations of practices and services. *Neither the markets themselves nor the broker-dealer participant in these markets should be forced into a single mold.* Market centers should compete and evolve according to their own natural genius and all actions to compel uniformity must be measured and justified as necessary to accomplish the salient purposes of the Securities Exchange Act, assure the maintenance of fair and orderly markets and to provide price protection for the orders of investors.'').

[8] *See* S. Rep. No. 94–75 (1975). While there is no disputing that Congress intended to grant broad and discretionary market oversight powers to the Commission, it is also important to recognize the intended limits of that discretion. The Senate Committee Report sheds particular light on those limits with respect to uniformity of structure: ''This is not to say that it is the goal of the legislation to ignore or eliminate distinctions between exchange markets and over-the-counter markets or other inherent differences or variations in components of a national market system. Some present distinctions may tend to disappear in a national market system, but it is not the intention of the bill to force *all markets for all securities into a single mold.* Therefore, in implementing the bill's objectives, the SEC would have the power to classify markets, firms, and securities in any manner it deems necessary or appropriate in the public interest or for the protection of investors and *to facilitate the development of subsystems* within the national market system.'' *See id.* at 7 (emphasis added).

[9] The Exchange would note that the suspension, rather than the elimination thereof, of LRPs for the duration of the pilot period would not be put before the Commission for consideration.

[10] *See, e.g.,* Securities Exchange Act Release No. 68785 (January 31, 2013), 78 FR 8646 (February 6, 2013) (SR–NYSEArca–2013–06).

[11] 15 U.S.C. 78f(b).

[12] 15 U.S.C. 78f(b)(5).

as reflected in the LULD Release. Moreover, the related Information Memorandum to members and member organizations would provide advance notice to NYSE MKT members and member organizations that the Exchange would cease offering the LRP functionality in furtherance of the Commission's expectations.

B. Self-Regulatory Organization's Statement on Burden on Competition

The Exchange does not believe that the proposed rule change will impose a burden on competition because the Exchange is discontinuing the LRP functionality to fulfill the Commission's expectations. In this respect, the Exchange notes that because Commission expects all exchanges to discontinue their respective volatility mechanisms, there should be no burden on competition because all exchanges as well as their members and issuers would be similarly situated.

C. Self-Regulatory Organization's Statement on Comments on the Proposed Rule Change Received From Members, Participants, or Others

No written comments were solicited or received with respect to the proposed rule change.

III. Date of Effectiveness of the Proposed Rule Change and Timing for Commission Action

The Exchange has filed the proposed rule change pursuant to Section 19(b)(3)(A)(iii) of the Act [13] and Rule 19b–4(f)(6) thereunder.[14] Because the proposed rule change does not: (i) significantly affect the protection of investors or the public interest; (ii) impose any significant burden on competition; and (iii) become operative prior to 30 days from the date on which it was filed, or such shorter time as the Commission may designate, if consistent with the protection of investors and the public interest, the proposed rule change has become effective pursuant to Section 19(b)(3)(A) of the Act and Rule 19b–4(f)(6)(iii) thereunder.

A proposed rule change filed under Rule 19b–4(f)(6) [15] normally does not become operative prior to 30 days after the date of the filing. However, pursuant to Rule 19b–4(f)(6)(iii),[16] the Commission may designate a shorter time if such action is consistent with the protection of investors and the public interest. The Exchange has asked the Commission to designate an operative date of April 8, 2013. The Commission believes that waiving the operative delay and designating April 8, 2013 as the operative date of the proposed rule change is consistent with the protection of investors and the public interest because such waiver would allow the proposed rule change to be operative on the initial date of Plan operations. Accordingly, the Commission hereby grants the Exchange's request and designates an operative date of April 8, 2013.[17]

At any time within 60 days of the filing of such proposed rule change, the Commission summarily may temporarily suspend such rule change if it appears to the Commission that such action is necessary or appropriate in the public interest, for the protection of investors, or otherwise in furtherance of the purposes of the Act.

IV. Solicitation of Comments

Interested persons are invited to submit written data, views, and arguments concerning the foregoing, including whether the proposed rule change is consistent with the Act. Comments may be submitted by any of the following methods:

Electronic Comments

- Use the Commission's Internet comment form (*http://www.sec.gov/rules/sro.shtml*); or
- Send an email to *rule-comments@sec.gov.* Please include File Number SR–NYSEMKT–2013–33 on the subject line.

Paper Comments

- Send paper comments in triplicate to Elizabeth M. Murphy, Secretary, Securities and Exchange Commission, 100 F Street NE., Washington, DC 20549–1090.

All submissions should refer to File Number SR–NYSEMKT–2013–33. This file number should be included on the subject line if email is used. To help the Commission process and review your comments more efficiently, please use only one method. The Commission will post all comments on the Commission's Internet Web site (*http://www.sec.gov/rules/sro.shtml*). Copies of the submission, all subsequent amendments, all written statements with respect to the proposed rule change that are filed with the Commission, and all written communications relating to the proposed rule change between the Commission and any person, other than those that may be withheld from the public in accordance with the provisions of 5 U.S.C. 552, will be available for Web site viewing and printing in the Commission's Public Reference Room, 100 F Street NE., Washington, DC 20549, on official business days between the hours of 10:00 a.m. and 3:00 p.m. Copies of such filing also will be available for inspection and copying at the principal office of the Exchange. All comments received will be posted without change; the Commission does not edit personal identifying information from submissions. You should submit only information that you wish to make publicly available. All submissions should refer to File Number SR–NYSEMKT–2013–33 and should be submitted on or before May 1, 2013.

For the Commission, by the Division of Trading and Markets, pursuant to delegated authority.[18]

Kevin M. O'Neill,

Deputy Secretary.

[FR Doc. 2013–08320 Filed 4–9–13; 8:45 am]

BILLING CODE 8011–01–P

[13] 15 U.S.C. 78s(b)(3)(A)(iii).

[14] 17 CFR 240.19b–4(f)(6). In addition, Rule 19b–4(f)(6) requires the Exchange to give the Commission written notice of the Exchange's intent to file the proposed rule change, along with a brief description and text of the proposed rule change, at least five business days prior to the date of filing of the proposed rule change, or such shorter time as designated by the Commission. The Exchange has satisfied this requirement.

[15] 17 CFR 240.19b–4(f)(6).

[16] 17 CFR 240.19b–4(f)(6)(iii).

[17] For purposes only of waiving the operative delay, the Commission has considered the proposed rule's impact on efficiency, competition, and capital formation. *See* 15 U.S.C. 78c(f).

[18] 17 CFR 200.30–3(a)(12).

SECURITIES AND EXCHANGE COMMISSION

[Release No. 34–69305; File No. SR–NYSEArca–2013–32]

Self-Regulatory Organizations; NYSE Arca, Inc.; Notice of Filing and Immediate Effectiveness of Proposed Rule Change Amending the NYSE Arca Equities Schedule of Fees and Charges for Exchange Services

April 4, 2013.

Pursuant to Section 19(b)(1) [1] of the Securities Exchange Act of 1934 (the ''Act'') [2] and Rule 19b–4 thereunder,[3] notice is hereby given that, on March 25, 2013, NYSE Arca, Inc. (the ''Exchange'' or ''NYSE Arca'') filed with the Securities and Exchange Commission (the ''Commission'') the proposed rule change as described in Items I, II, and III below, which Items have been prepared by the self-regulatory organization. The Commission is publishing this notice to

[1] 15 U.S.C. 78s(b)(1).

[2] 15 U.S.C. 78a.

[3] 17 CFR 240.19b–4.

solicit comments on the proposed rule change from interested persons.

I. Self-Regulatory Organization's Statement of the Terms of Substance of the Proposed Rule Change

The Exchange proposes to amend its Schedule of Fees and Charges for Exchange Services (''Fee Schedule'') to (i) amend Step Up Tier 1 and Step Up Tier 2 (the ''Step Up Tiers'') to increase the volume threshold requirements needed to be eligible for each respective tier; (ii) amend the Cross-Asset Tier to replace the numeric benchmark needed to be eligible for the tier with a benchmark based on a percentage of options contract volume; (iii) add a new Retail Order Cross-Asset Tier; (iv) raise the fee charged for transactions in securities with a per share price below $1.00; and (v) amend the options-related volume requirements in certain tiers in the Fee Schedule to exclude volume in mini options from contributing to the volume requirements of the affected tiers. The Exchange proposes to implement the changes on April 1, 2013. The text of the proposed rule change is available on the Exchange's Web site at *www.nyse.com,* at the principal office of the Exchange, and at the Commission's Public Reference Room.

II. Self-Regulatory Organization's Statement of the Purpose of, and Statutory Basis for, the Proposed Rule Change

In its filing with the Commission, the self-regulatory organization included statements concerning the purpose of, and basis for, the proposed rule change and discussed any comments it received on the proposed rule change. The text of those statements may be examined at the places specified in Item IV below. The Exchange has prepared summaries, set forth in sections A, B, and C below, of the most significant parts of such statements.

A. Self-Regulatory Organization's Statement of the Purpose of, and Statutory Basis for, the Proposed Rule Change

1. Purpose

The Exchange proposes to amend its Fee Schedule to (i) amend the Step Up Tiers to increase the volume threshold requirements needed to be eligible for each respective tier; (ii) amend the Cross-Asset Tier to replace the numeric benchmark needed to be eligible for the tier with a benchmark based on a percentage of options contract volume; (iii) add a new Retail Order Cross-Asset Tier; (iv) raise the fee charged for transactions in securities with a per share price below $1.00; and (v) amend the options-related volume requirements in certain tiers in the Fee Schedule to exclude volume in mini options from contributing to the volume requirements of the affected tiers. The Exchange proposes to implement the changes on April 1, 2013.

Step Up Tiers

Currently, in order to qualify for Step Up Tier 1, an ETP Holder on a daily basis, measured monthly, must directly execute providing volume on NYSE Arca in an amount that is an increase of no less than 0.15% of U.S. consolidated average daily volume (''US CADV'') in Tape A, Tape B, and Tape C securities for that month over the ETP Holder's average daily providing volume in June 2011 (the ''Baseline Month''), subject to a minimum increase of 15 million average daily providing shares.[4] The Exchange proposes to increase the eligibility requirement for Step Up Tier 1 to no less than 0.20% of US CADV for the month over the ETP Holder's average daily providing volume in the Baseline Month, subject to a minimum increase of 20 million average daily providing shares.

Similarly, in order to qualify for Step Up Tier 2, an ETP Holder on a daily basis, measured monthly, must directly execute providing volume on NYSE Arca in an amount that is an increase of no less than 0.10% of US CADV for that month over the ETP Holder's average daily providing volume in the Baseline Month, subject to a minimum increase of 10 million average daily providing shares. The Exchange proposes to increase the eligibility requirement for Step Up Tier 2 to no less than 0.12% of US CADV for the month over the ETP Holder's average daily providing volume in the Baseline Month, subject to a minimum increase of 12 million average daily providing shares.

By way of example, if an ETP Holder executed an average daily providing volume of 5 million shares in the Baseline Month, then to qualify for Step Up Tier 2 in a month where US CADV is 11 billion shares, that ETP Holder would need to increase its average daily providing volume by at least 13.2 million shares, or 0.12% of that month's US CADV, for a total average daily providing volume of at least 18.2 million shares. If that same ETP Holder in that same month increased its average daily providing volume by at least 22 million shares, or 0.20% of that month's US CADV, for a total average daily providing volume average of at least 27 million shares, then that ETP Holder would qualify for Step Up Tier 1.[5]

As previously explained,[6] the goal of the Step Up Tiers is to incent ETP Holders to increase the orders sent directly to NYSE Arca and therefore provide liquidity that supports the quality of price discovery and promotes market transparency. In the Step Up Tiers Release, the Exchange explained that the Step Up Tiers were expected to benefit ETP Holders whose increased order flow provided added levels of liquidity (thereby contributing to the depth and market quality of the Book) but who are still not eligible for Tier 1, 2 or 3, or Investor Tier 1 or 2.[7] For similar reasons, the Exchange believes that raising the volume requirements needed to be eligible for each respective Step Up Tier will continue to incent ETP Holders to increase the orders sent directly to NYSE Arca and therefore provide liquidity that supports the quality of price discovery and promotes market transparency. The Exchange believes that this especially is the case given that the credits for Tape A and Tape C securities under Step Up Tier 1 ($0.00295) and Step Up Tier 2 ($0.0029) are substantially higher that the credits for Tape A and Tape C securities under the Basic Rates ($0.0021) and Tier 3 ($0.0025).

Cross-Asset Tier

Currently, under the Cross-Asset Tier, ETP Holders and Market Makers that (1) provide liquidity of 0.45% or more of the US CADV per month in Tape A, Tape B, and Tape C securities combined, and (2) are affiliated with an NYSE Arca Options Trading Permit (''OTP'') Holder or OTP Firm that provides an average daily volume (''ADV'') of electronic posted Customer executions in Penny Pilot issues on NYSE Arca Options of at least 90,000 contracts receive a per share credit of $0.0030 for orders in Tape A, Tape B

[4] US CADV means United States Consolidated Average Daily Volume for transactions reported to the Consolidated Tape and excludes volume on days when the market closes early. Transactions that are not reported to the Consolidated Tape are not included in US CADV. The Exchange currently makes this data publicly available on a T + 1 basis from a link at *http://www.nyxdata.com/US-and-European-Volumes.*

[5] In addition, for both Step Up Tiers, those ETP Holders that did not directly provide volume to NYSE Arca in the Baseline Month will be treated as having an average daily providing volume of zero for the Baseline Month. With respect to the increased percentage of US CADV, the volume requirements to reach the Step Up Tiers' pricing levels will adjust each calendar month based on the US CADV for that given month.

[6] *See* Securities Exchange Act Release No. 64820 (July 6, 2011), 76 FR 40974 (July 12, 2011) (SR–NYSEArca–2011–41) (''Step Up Tiers Release'').

[7] *Id.* at 76 FR 40975.

and Tape C securities that provide liquidity to the Book. The Exchange proposes to replace the current fixed 90,000-contract requirement with a variable requirement of at least 0.95% of total Customer equity and exchange-traded fund (''ETF'') option (as discussed below, excluding mini options) ADV, as reported by the Options Clearing Corporation (''OCC'').[8] The Exchange is proposing these changes to the Cross-Asset Tier in order to make the eligibility requirement consistent with the Exchange's other variable eligibility requirements that are based on percentage of volume. The Exchange believes that using an eligibility requirement based on percentage of volume will better reflect fluctuations in trading volumes. In this respect, the Exchange notes that Equity and ETF Customer volume is a widely followed benchmark of industry volume and is indicative of industry market share. The Exchange also notes that based on current volume, the 0.95% volume requirement is consistent with the original 110,000 contract requirement which was lowered July 1, 2012 due to concerns over temporarily lower volume on NYSE Arca Options.[9] The proposed changes to the Cross-Asset Tier would thus eliminate the need to modify a fixed number requirement because a threshold based on volume would automatically make the necessary adjustments.

Retail Order Cross-Asset Tier

The Exchange also is proposing a new Retail Cross-Asset Tier. Under the Retail Cross-Asset Tier, firms that execute at least 0.30% of US CADV in retail orders and are affiliated with an NYSE Arca OTP Holder or OTP Firm that provides an ADV of electronic posted Customer executions in customer penny pilot options of at least 0.50% of total Customer equity and ETF option (as discussed below, excluding mini options) ADV would qualify for a $.0034 rebate for retail orders that provide liquidity. The Retail Cross-Asset Tier would provide firms with a second way to qualify for the $0.0034 rebate (in addition to Investor Tier 1) using equity retail and options customer post. The Exchange notes that the $0.0034 rebate is $.0001 higher than the current Retail Order Tier in light of the tier including an additional options requirement and a higher equity retail requirement.

Sub-$1.00 Securities

Currently, a fee of 0.2% of the total dollar value of the transaction is charged for transactions with a per share price below $1.00 that take liquidity from the Book. The Exchange proposes raising the fee from 0.2% of the total dollar value of the transaction to 0.3% of the total dollar value of the transaction. The Exchange is proposing these changes as they are consistent with similar fee amounts charged by other exchanges.[10]

Mini Options

The Exchange proposes to amend the Fee Schedule to specifically exclude volume in mini options from contributing to the volume requirements for tiers with an options volume-related component. Specifically, the proposed amendment would exclude volume in mini options from contributing to the volume requirements in Tier 1 and the Cross-Asset Tier. Mini option volume similarly would be excluded from the proposed Retail Order Cross-Asset Tier discussed above.

The proposed changes are not otherwise intended to address any other problem, and the Exchange is not aware of any significant problem that the affected market participants would have in complying with the proposed changes.

2. Statutory Basis

The Exchange believes that the proposed rule change is consistent with Section 6(b) of the Act,[11] in general, and furthers the objectives of Sections 6(b)(4) and 6(b)(5) of the Act,[12] in particular, because it provides for the equitable allocation of reasonable dues, fees, and other charges among its members, issuers and other persons using its facilities and does not unfairly discriminate between customers, issuers, brokers or dealers.

The Exchange believes that the proposed amendments to the Step Up Tiers that raise the volume requirements needed to be eligible for each respective tier are reasonable because the proposed changes are designed to further incent ETP Holders to increase the orders sent directly to NYSE Arca and therefore provide liquidity that supports the quality of price discovery and promotes market transparency. The Exchange believes that this is especially the case given that the credits for Tape A and Tape C securities under Step Up Tier 1 ($0.00295) and Step Up Tier 2 ($0.0029) are substantially higher than the credits for Tape A and Tape C securities under Basic Rates ($0.0021) and Tier 3 ($0.0025). The Exchange further believes that the proposed amendments to the Step Up Tiers are equitable and not unfairly discriminatory because they will benefit ETP Holders whose increased order flow provides added levels of liquidity (thereby contributing to the depth and market quality of the Book), but who may still not be eligible for Tier 1, 2 or 3, or other tiers. Moreover, the Step Up Tiers are available for all ETP Holders to satisfy.

The Exchange believes that the proposal to amend the Cross-Asset Tier to replace the current fixed benchmark needed to be eligible for the tier with a variable benchmark based on a percentage of volume is reasonable because it will make the eligibility requirement consistent with the Exchange's other variable eligibility requirements that also are based on percentage of volume. In addition, the Exchange believes that expanding the basis for the Cross-Asset Tier to include all Customer equity and ETF options ADV will better reflect the correlation between options trading and the underlying securities, which trade at the Exchange, including ETFs. In this respect, the Exchange notes that Equity and ETF Customer volume is a widely followed benchmark of industry volume and is indicative of industry market

[8] The OCC provides volume information in two product categories: equity and ETF volume and index volume, and the information can be filtered to show only Customer, firm, or market maker account type. Equity and ETF Customer volume numbers are available directly from the OCC each morning, or may be transmitted, upon request, free of charge from the Exchange. Total Industry Customer equity and ETF option ADV is comprised of those equity and ETF option contracts that clear in the customer account type at OCC, including Exchange-Traded Fund Shares, Trust Issued Receipts, Partnership Units, and Index-Linked Securities such as Exchange-Traded Notes (*see* NYSE Arca Options Rule 5.3(g)–(j)), and does not include contracts that clear in either the firm or market maker account type at OCC or contracts overlying a security other than an equity or ETF security. The Exchange notes that there is one Penny Pilot issue, Mini NDX 100 Stock Index, that does not overlie an equity or ETF security that is eligible for the Customer posting credit. This Penny Pilot issue is not included in equity and ETF option ADV; however, the Exchange expects that the effect on the calculations for the qualification thresholds for tiered Customer posting credits to be negligible. Under the proposed rule change, Total Industry Customer equity and ETF option ADV will be that which is reported for the month by OCC in the month in which the credits may apply. The Exchange currently makes this data publicly available on a T+1 basis from a link at *http://www.nyxdata.com/factbook*.

[9] *See* Securities Exchange Act Release Nos. 67180 (June 11, 2012), 77 FR 36027 (June 15, 2012) (SR–NYSEArca–2012–56) and 67424 (July 12, 2012), 77 FR 42347 (July 18, 2012) (SR–NYSE–Arca–2012–70).

[10] *See, e.g.,* DirectEdge Fee Schedule, *available at http://www.directedge.com/Membership/FeeSchedule/EDGXFeeSchedule.aspx;* and Nasdaq Fee Schedule, *available at http://www.nasdaqtrader.com/Trader.aspx?id=PriceListTrading2#execution.*

[11] 15 U.S.C. 78f(b).

[12] 15 U.S.C. 78f(b)(4) and (5).

share.[13] In addition, the Exchange believes that the proposed amendments to the Cross-Asset Tier are equitable and not unfairly discriminatory because they will apply to all ETP Holders and Market Makers.

Moreover, the Cross-Asset Tier is available for all ETP Holders to satisfy, except for those ETP Holders that are not affiliated with an NYSE Arca Options OTP Holder or OTP Firm. However, the Exchange notes that ETP Holders that are not affiliated with an NYSE Arca Options OTP Holder or OTP Firm are still eligible for the $0.0030 Cross-Asset Tier rate when they qualify for one of the other Tiers described in the Fee Schedule (e.g., Tier 1).

The Exchange believes that the proposal to add the new Retail Order Cross-Asset Tier is reasonable because it would provide firms with a way in which to qualify for $0.0034 rebate through equity retail and options customer orders. The Exchange further believes that the proposed Retail Order Cross-Asset Tier is equitable and not unfairly discriminatory because a firm that does not submit options orders can still be eligible for the $0.0034 rebate available from Investor Tier 1.

The Exchange believes that the proposal to raise the fee charged for transactions with a per share price below $1.00 that take liquidity from the Book from 0.2% to 0.3% of the total dollar value of the transaction is reasonable because the proposed new rate is consistent with similar fee amounts charged by other exchanges.[14] The Exchange further believes that the proposed fee increase is equitable and not unfairly discriminatory because it will apply to all transactions that take liquidity from the Exchange in securities with a per share price below $1.00.

Finally, the Exchange believes that the proposal to exclude volume in mini options from contributing to the option volume requirements for Tier 1, the Cross-Asset Tier and the proposed Retail Order Cross-Asset Tier is reasonable because the options volume requirement currently in place in the fee schedule were established prior to the existence of mini options, a new product on NYSE Arca Options. Because mini options are such a new product, the Exchange believes it is reasonable to exclude mini option volume in this way. The Exchange further believes that the proposal to exclude volume in mini options from the tiers mentioned above is equitable and not unfairly discriminatory because all market participants that are eligible for the affected tiers will be similarly situated.

B. Self-Regulatory Organization's Statement on Burden on Competition

The Exchange does not believe that the proposed rule change will impose any burden on competition that is not necessary or appropriate in furtherance of the purposes of the Act. In particular, the proposed amendments to the Step Up Tiers that raise the volume requirement needed to be eligible for each respective tier are designed to incent ETP Holders and Market Makers to increase the volume of orders sent directly to NYSE Arca and therefore provide liquidity that supports the quality of price discovery and promotes market transparency.

The proposal to amend the Cross-Asset Tier to replace the numeric benchmark needed to be eligible for the tier with a benchmark based on a percentage of volume will not place an undue burden on competition because it will apply uniformly to all ETP Holders and Market Makers. The proposal to add the new Retail Order Cross-Asset Tier will not place an undue burden on competition because all firms can be eligible for the $0.0034 credit, as those firms that do not submit options orders can still qualify to receive the $0.0034 rebate by meeting the requirements of Investor Tier 1.

The proposal to raise the fee charged for transactions with a per share price below $1.00 from 0.2% to 0.3% of the total value of orders that take liquidity from the Book is consistent with similar fees charged by other exchanges. Finally, the proposal to exclude volume in mini options from contributing to the option volume requirements for Tier 1, the Cross-Asset Tier and the proposed Retail Order Cross-Asset Tier will not place an undue burden on competition because all market participants will be similarly situated in their inability to the use volume in mini options to satisfy the options volume requirements of the affected tiers.

The Exchange notes that it operates in a highly competitive market in which market participants can readily favor competing venues. In such an environment, the Exchange must continually review, and consider adjusting, its fees and credits to remain competitive with other exchanges. For the reasons described above, the Exchange believes that the proposed change reflects this competitive environment.

C. Self-Regulatory Organization's Statement on Comments on the Proposed Rule Change Received From Members, Participants or Others

No written comments were solicited or received with respect to the proposed rule change.

III. Date of Effectiveness of the Proposed Rule Change and Timing for Commission Action

The foregoing rule change is effective upon filing pursuant to Section 19(b)(3)(A)(ii) of the Act[15] because it establishes a due, fee, or other charge imposed by NYSE Arca. At any time within 60 days of the filing of such proposed rule change, the Securities and Exchange Commission (''Commission'') summarily may temporarily suspend such rule change if it appears to the Commission that such action is necessary or appropriate in the public interest, for the protection of investors, or otherwise in furtherance of the purposes of the Act. If the Commission takes such action, the Commission shall institute proceedings under Section 19(b)(2)(B)[16] of the Act to determine whether the proposed rule change should be approved or disapproved.

IV. Solicitation of Comments

Interested persons are invited to submit written data, views, and arguments concerning the foregoing, including whether the proposed rule change is consistent with the Act. Comments may be submitted by any of the following methods:

Electronic Comments

- Use the Commission's Internet comment form (*http://www.sec.gov/rules/sro.shtml*); or
- Send an email to *rule-comments@sec.gov.* Please include File Number SR–NYSEArca–2013–32 on the subject line.

Paper Comments

- Send paper comments in triplicate to Elizabeth M. Murphy, Secretary, Securities and Exchange Commission, 100 F Street NE., Washington, DC 20549–1090.

All submissions should refer to File Number SR–NYSEArca-2013–32. This file number should be included on the subject line if email is used.

To help the Commission process and review your comments more efficiently, please use only one method. The Commission will post all comments on the Commission's Internet Web site

[13] *See supra* note 8.

[14] *See supra* note 10.

[15] 15 U.S.C. 78s(b)(3)(A)(ii).

[16] 15 U.S.C. 78s(b)(2)(B).

(*http://www.sec.gov/rules/sro.shtml*). Copies of the submission, all subsequent amendments, all written statements with respect to the proposed rule change that are filed with the Commission, and all written communications relating to the proposed rule change between the Commission and any person, other than those that may be withheld from the public in accordance with the provisions of 5 U.S.C. 552, will be available for Web site viewing and printing in the Commission's Public Reference Room, 100 F Street NE., Washington, DC 20549 on official business days between the hours of 10:00 a.m. and 3:00 p.m. Copies of such filing also will be available for inspection and copying at the principal offices of NYSE Arca. All comments received will be posted without change; the Commission does not edit personal identifying information from submissions. You should submit only information that you wish to make available publicly. All submissions should refer to File Number SR–NYSEArca–2013–32, and should be submitted on or before May 1, 2013.

For the Commission, by the Division of Trading and Markets, pursuant to delegated authority.[17]

Kevin M. O'Neill,

Deputy Secretary.

[FR Doc. 2013–08385 Filed 4–9–13; 8:45 am]

BILLING CODE 8011–01–P

[17] 17 CFR 200.30–3(a)(12).

SECURITIES AND EXCHANGE COMMISSION

[Release No. 34–69310; File No. SR–BATS–2013–022]

Self-Regulatory Organizations; BATS Exchange, Inc.; Notice of Filing and Immediate Effectiveness of a Proposed Rule Change To Modify Market Maker Peg Order Functionality

April 4, 2013.

Pursuant to Section 19(b)(1) of the Securities Exchange Act of 1934 (''Act'')[1] and Rule 19b–4 thereunder,[2] notice is hereby given that, on March 22, 2013, BATS Exchange, Inc. (the ''Exchange'' or ''BATS'') filed with the Securities and Exchange Commission (''Commission'') the proposed rule change as described in Items I and II below, which Items have been prepared by the Exchange. The Commission is publishing this notice to solicit comments on the proposed rule change from interested persons.

[1] 15 U.S.C. 78s(b)(1).

[2] 17 CFR 240.19b–4.

I. Self-Regulatory Organization's Statement of the Terms of Substance of the Proposed Rule Change

The Exchange is filing with the Commission a proposal to amend the functionality of the Market Maker Peg Order to more closely resemble analogous order types offered by NASDAQ Stock Market LLC (''Nasdaq'') and EDGX Exchange, Inc. (''EDGX'')[3] and to make certain clarifying changes to the rule.

The text of the proposed rule change is available at the Exchange's Web site at *http://www.batstrading.com,* at the principal office of the Exchange, and at the Commission's Public Reference Room.

II. Self-Regulatory Organization's Statement of the Purpose of, and Statutory Basis for, the Proposed Rule Change

In its filing with the Commission, the Exchange included statements concerning the purpose of and basis for the proposed rule change and discussed any comments it received on the proposed rule change. The text of these statements may be examined at the places specified in Item IV below. The Exchange has prepared summaries, set forth in Sections A, B, and C below, of the most significant parts of such statements.

A. Self-Regulatory Organization's Statement of the Purpose of, and Statutory Basis for, the Proposed Rule Change

1. Purpose

The purpose of this proposed rule change is to amend BATS Rule 11.9(c)(16). Specifically, the Exchange proposes to: (1) Remove the option to allow Market Maker Peg Orders to be priced and executed during the Pre-Opening Session[4] and the After Hours Trading Session[5] and to cancel all Market Maker Peg Orders that are on the BATS Book[6] at the end of Regular Trading Hours; (2) remove the option for a Market Maker Peg Order to be automatically cancelled where there is no NBBO and the order is priced based on the last reported sale from the single plan processor; (3) remove the functionality that would allow a Market Maker to designate a more aggressive offset from the NBBO; (4) make clear that a Market Maker Peg Order will not peg to itself; and (5) make clear that only registered Market Makers are eligible to enter Market Maker Peg Orders. The Exchange is also proposing to reaffirm that it will continue to offer the present automated functionality provided to market makers under Rule 11.8(e) for a period of three months after the implementation of the Market Maker Peg Order.

[3] The Exchange notes that EDGA Exchange, Inc. also has an order type identical to that of EDGX, however, for the purposes of this filing, the Exchange is referring only to the order type functionality available at EDGX.

[4] Pre-Opening Session means the time between 8:00 a.m. and 9:30 a.m. Eastern Time.

[5] After Hours Trading Session means the time between 4:00 p.m. and 5:00 p.m. Eastern Time.

[6] BATS Book means the System's electronic file of orders.

Market Maker Peg Orders Entered Outside of Regular Trading Hours

The Exchange is proposing to amend BATS Rule 11.9(c)(16) to eliminate the option for Market Maker Peg Orders to be priced and executed outside of Regular Trading Hours and to cancel all Market Maker Peg Orders that are on the BATS Book at the end of Regular Trading Hours. As currently written, a Market Maker may enter a Market Maker Peg Order at any time during the Pre-Opening Session[7] or Regular Trading Hours, with an order entered during the Pre-Opening Session, by default, to remain unpriced and unexecutable until Regular Trading Hours, however, a Market Maker could designate that the order be priced and executable immediately upon entry during the Pre-Opening Session.

Specifically, the Exchange is proposing rule changes to eliminate the ability for a Market Maker to designate that an order be priced and executable immediately upon entry during the Pre-Opening Session, to state that all Market Maker Peg Orders that are on the BATS Book expire at the end of Regular Trading Hours, and to reject all Market Maker Peg Orders entered during the After Hours Trading Session. The Exchange is proposing these changes in order to make its Market Maker Peg Order functionality more closely resemble that of Market Maker Peg Orders at Nasdaq and EDGX. Because the Market Maker Peg Order is designed to help Market Makers meet their quoting obligation on the Exchange and the Exchange's quoting obligations do not include any obligations outside of Regular Trading Hours, the Exchange does not believe that allowing Market Maker Peg Orders to be priced and executed outside of Regular Trading Hours provides Market Makers with any benefit that would warrant the additional complexity that the

[7] The Pre-Opening Session means the time between 8:00 a.m. and 9:30 a.m. Eastern Time.

functionality would require. As such, the Exchange believes that eliminating the ability to have Market Maker Peg Orders price and execute outside of Regular Trading Hours will, in conjunction with the other changes proposed in this filing, act to simplify the Market Maker Peg Order type, thereby increasing its utility to Market Makers and decreasing the likelihood of unforeseen complications.

Pricing Market Maker Peg Orders to the Last Reported Sale

The Exchange is proposing to amend BATS Rule 11.9(c)(16) to eliminate the functionality that would allow a Market Maker to designate Market Maker Peg Orders to be cancelled where there is no NBBO and the order would otherwise be priced to the last reported sale from the single plan processor. Currently, a Market Maker may optionally designate that a Market Maker Peg Order be cancelled where it would be priced to the last reported sale from the single plan processor.

The Exchange is proposing to eliminate this functionality in order to make its Market Maker Peg Order functionality more closely resemble that of Market Maker Peg Orders at Nasdaq and EDGX. Additionally, the Exchange believes that removing the ability to designate that Market Maker Peg Orders be cancelled where the order would peg based on the last reported sale will, in conjunction with the other changes proposed in this filing, act to simplify the Market Maker Peg Order type, thereby increasing its utility to Market Makers and decreasing the likelihood of unforeseen complications.

Eliminating More Aggressive Offsets From the NBBO

The Exchange is proposing to amend BATS Rule 11.9(c)(16) in order to eliminate the functionality that would allow a Market Maker to designate a more aggressive offset from the NBBO than the Designated Percentage. As currently written, the rule allows a Market Maker to designate a more aggressive offset from the NBBO and a percentage away from the NBBO or the price of the last reported sale from the responsible single plan processor at which the order will be adjusted back to the Market Maker-designated offset.

The Exchange is proposing to eliminate this functionality in order to, as mentioned above, simplify the Market Maker Peg Order functionality. Market Makers will still be able to enter orders priced more aggressively than the automatically priced Market Maker Peg Orders and will have access to existing pegged order functionality. The Exchange believes that this existing functionality will provide Market Makers with the necessary tools to enter orders priced more aggressively than the Market Maker Peg Order while not adding an additional level of complexity by requiring Market Makers to establish additional parameters for their Market Maker Peg Orders.

Preventing Market Maker Peg Orders From Pegging to Itself

The Exchange is proposing to amend BATS Rule 11.9(c)(16) in order to make clear that a Market Maker Peg Order will not use its own pegged price as the basis for adjusting the order's price. Where there is no NBBO and a Market Maker Peg Order, whether upon entry or already on the BATS Book, is pegged to the last reported sale from the single plan processor, the Market Maker Peg Order will be reported to the SIPs and will be disseminated to the Exchange as the NBBO. The Exchange is seeking to make clear that, in this situation, the Exchange will not reprice the order based on the fact that the Market Maker Peg Order is the NBBO. Rather, the Exchange will only adjust the market Maker Peg Order when there is either a new consolidated last sale or a new NBBO is established by a national securities exchange.

Restriction of Market Maker Peg Orders to Market Makers

The Exchange is proposing to amend BATS Rule 11.9(c)(16) in order to make clear that only a registered Market Maker can enter a Market Maker Peg Order. The Exchange believes that, as currently constructed, only a registered Market Maker is allowed to enter Market Maker Peg Orders under Rule 11.9(c)(16) despite lacking any explicit language stating as much. As discussed above, the order type was created to help Market Makers comply with their quoting requirements on the Exchange and, for that reason, the behaviors of the Market Maker Peg Order are based specifically on the Exchange's quoting requirements. The Exchange does not make the order type available to other market participants because it does not believe that there would be any demand for the order type or that it would be particularly useful for market participants that are not Market Makers, especially given the availability of more customizable peg orders.[8] In order to make it abundantly clear, however, the Exchange is proposing to amend the rule to explicitly state that only registered Market Makers can enter Market Maker Peg Orders.

2. Statutory Basis

The Exchange believes that the proposal is consistent with Section 6(b) of the Act[9] in general, and furthers the objectives of Section 6(b)(5) of the Act[10] in particular, in that it is designed to promote just and equitable principles of trade, to foster cooperation and coordination with persons engaged in regulating, clearing, settling, processing information with respect to, and facilitating transactions in securities, to remove impediments to and perfect the mechanism of a free and open market and a national market system, and, in general to protect investors and the public interest. The Exchange believes that eliminating the ability of Market Maker Peg Orders to be priced and executed outside of Regular Trading Hours and cancelling all Market Maker Peg Orders on the BATS Book at the end of Regular Trading Hours will result in a continuing benefit to market participants by simplifying the process of entering and cancelling Market Maker Peg Orders and including only the functionality necessary for Market Makers to meet their regulatory obligations. Additionally, the Exchange believes that the proposal will foster cooperation and coordination with processing information with respect to transactions in securities by preventing the Exchange from sending a potentially significantly larger than normal number of orders to the SIPs at the beginning of Regular Trading Hours when Market Maker Peg Orders entered during the Pre-Opening Session would be priced and become eligible for execution at exactly the same time. Similarly, the Exchange believes that eliminating the option to have a Market Maker Peg Order automatically cancel an order that would be priced based on the last reported sale from the single plan processor will result in a continuing benefit to market participants by simplifying the functionality and corresponding complexity of implementation of Market Maker Peg Orders. The Exchange also believes that removing the functionality that would allow a Market Maker to designate a more aggressive offset from the NBBO will result in a continuing benefit to market participants by further simplifying the functionality of Market Maker Peg Orders to include only the functionality necessary for Market Makers to meet their regulatory

[8] Including Primary Pegged Order, Market Pegged Order, Mid-Point Peg Order, and Alternative Mid-Point Peg Order [sic], as described in BATS Rules 11.9(c)(8) and (9).

[9] 15 U.S.C. 78f(b).

[10] 15 U.S.C. 78f(b)(5).

obligations. The Exchange does not believe that removing this functionality will disincentivize Market Makers from posting more aggressive quotes. Rather, the Exchange believes that, similar to the market maker quoter, Market Makers will use the Market Maker Peg Order to satisfy the Exchange's quoting requirements, while continuing to enter and manage more aggressively priced orders using existing order types.

B. Self-Regulatory Organization's Statement on Burden on Competition

The Exchange does not believe that the proposed rule change will impose any burden on competition not necessary or appropriate in furtherance of the purposes of the Act. To the contrary, the proposed changes to the Market Maker Peg Order type functionality will further align the Exchange's functionality with that offered by certain other competing market centers. Specifically, the rule change proposed herein is based on Nasdaq Rule 4751(f)(15) and EDGX Rule 11.5(c)(15).[11] By adopting changes to functionality to align with functionality in place elsewhere, as well as simplifying such functionality, the Exchange believes that it is reducing the potential for confusion amongst market participants.

C. Self-Regulatory Organization's Statement on Comments on the Proposed Rule Change Received From Members, Participants, or Others

The Exchange has neither solicited nor received written comments on the proposed rule change.

III. Date of Effectiveness of the Proposed Rule Change and Timing for Commission Action

Because the foregoing proposed rule change does not significantly affect the protection of investors or the public interest, does not impose any significant burden on competition, and, by its terms, does not become operative for 30 days from the date on which it was filed, or such shorter time as the Commission may designate, it has become effective pursuant to Section 19(b)(3)(A) of the Act[12] and Rule 19b–4(f)(6) thereunder.[13]

The Exchange has requested that the Commission waive the 30-day operative delay. The Commission believes that waiving the 30-day operative delay is consistent with the protection of investors and the public interest. Doing so will allow the Exchange to make the improvements and clarifications to the Market Maker Peg Order effective immediately and address any technical or operative issues that member organizations may experience if the Exchange's implementation of Market Maker Peg Order is different from that of other exchanges.

Therefore, the Commission designates the proposal operative upon filing.[14]

At any time within 60 days of the filing of the proposed rule change, the Commission summarily may temporarily suspend such rule change if it appears to the Commission that such action is necessary or appropriate in the public interest, for the protection of investors, or otherwise in furtherance of the purposes of the Act. If the Commission takes such action, the Commission shall institute proceedings under Section 19(b)(2)(B)[15] of the Act to determine whether the proposed rule change should be approved or disapproved.

IV. Solicitation of Comments

Interested persons are invited to submit written data, views, and arguments concerning the foregoing, including whether the proposed rule change is consistent with the Act. Comments may be submitted by any of the following methods:

Electronic Comments

- Use the Commission's Internet comment form (*http://www.sec.gov/rules/sro.shtml*); or
- Send an email to *rule-comments@sec.gov.* Please include File Number SR–BATS–2013–022 on the subject line.

Paper Comments

- Send paper comments in triplicate to Elizabeth M. Murphy, Secretary, Securities and Exchange Commission, 100 F Street NE., Washington, DC 20549–1090.

All submissions should refer to File Number SR–BATS–2013–022. This file number should be included on the subject line if email is used. To help the Commission process and review your comments more efficiently, please use only one method. The Commission will post all comments on the Commission's Internet Web site (*http://www.sec.gov/rules/sro.shtml*). Copies of the submission, all subsequent amendments, all written statements with respect to the proposed rule change that are filed with the Commission, and all written communications relating to the proposed rule change between the Commission and any person, other than those that may be withheld from the public in accordance with the provisions of 5 U.S.C. 552, will be available for Web site viewing and printing in the Commission's Public Reference Room, 100 F Street NE., Washington, DC 20549, on official business days between the hours of 10:00 a.m. and 3:00 p.m. Copies of the filing also will be available for inspection and copying at the principal office of the Exchange. All comments received will be posted without change; the Commission does not edit personal identifying information from submissions. You should submit only information that you wish to make available publicly. All submissions should refer to File Number SR–BATS–2013–022 and should be submitted on or before May 1, 2013.

For the Commission, by the Division of Trading and Markets, pursuant to delegated authority.[16]

Kevin M. O'Neill,

Deputy Secretary.

[FR Doc. 2013–08330 Filed 4–9–13; 8:45 am]

BILLING CODE 8011–01–P

[11] *See* Securities Exchange Act Release Nos. 67203 (June 14, 2012), 77 FR 37086 (June 20, 2012) (SR NASDAQ–2012–066); 67959 (October 2, 2012), 77 FR 61449 (October 9, 2012) (SR–EDGX–2012–44); 68596 (January 7, 2013), 78 FR 2477 (January 11, 2013) (SR–EDGX–2012–49).

[12] 15 U.S.C. 78s(b)(3)(A).

[13] 17 CFR 240.19b–4(f)(6). In addition, Rule 19b–4(f)(6)(iii) requires the Exchange to give the Commission written notice of the Exchange's intent to file the proposed rule change, along with a brief description and text of the proposed rule change, at least five business days prior to the date of filing of the proposed rule change, or such shorter time as designated by the Commission. The Exchange has satisfied this requirement.

[14] For purposes only of waiving the 30-day operative delay, the Commission has considered the proposed rule's impact on efficiency, competition, and capital formation. *See* 15 U.S.C. 78c(f).

[15] 15 U.S.C. 78s(b)(2)(B).

[16] 17 CFR 200.30–3(a)(12).

SECURITIES AND EXCHANGE COMMISSION

[Release No. 34–69297; File No. SR–FINRA–2013–003]

Self-Regulatory Organizations; Financial Industry Regulatory Authority, Inc.; Order Approving Proposed Rule Change To Amend the Customer and Industry Codes of Arbitration Procedure To Revise the Public Arbitrator Definition

April 4, 2013.

I. Introduction

On January 4, 2012, the Financial Industry Regulatory Authority, Inc. (''FINRA'') filed with the Securities and Exchange Commission (''SEC'' or ''Commission''), pursuant to Section 19(b)(1) of the Securities Exchange Act

of 1934 (''Exchange Act'' or ''Act'') [1] and Rule 19b–4 thereunder,[2] a proposed rule change to amend FINRA's Customer and Industry Codes of Arbitration Procedure (collectively, the ''Codes'') to revise the definition of ''public arbitrator'' in the Codes. Specifically, the proposed rule change would (a) exclude persons associated with a mutual fund or hedge fund from serving as public arbitrators and (b) require individuals to wait for two years after ending certain affiliations before they may be permitted to serve as public arbitrators. The proposed rule change was published for comment in the **Federal Register** on January 17, 2013.[3] The Commission received 45 comment letters on the proposed rule change,[4] and a response to comments from FINRA.[5] This order approves the proposed rule change.

II. Description of the Proposal

As stated in the Notice, FINRA classifies arbitrators under the Codes as either ''non-public'' (otherwise known as ''industry'' arbitrators) or ''public.'' Arbitrators are generally considered non-public if they are affiliated with the securities industry either because they (1) are currently or were formerly employed in a securities business; or (2) provide professional services to securities businesses. Arbitrators are generally considered public if they (1) do not have any significant affiliation with the securities industry; and (2) are not related to anyone with a significant affiliation with the securities industry.

To improve investor confidence in the neutrality of FINRA's public arbitrator roster, FINRA has amended its arbitrator definitions a number of times over the years.

In 2004, FINRA amended the definitions of ''public arbitrator'' and ''non-public arbitrator'' to:

- Increase from three years to five years the amount of time necessary after leaving the securities industry to transition from a non-public to public arbitrator;
- Clarify that ''retired'' from the industry includes anyone who spent a substantial part of his or her career in the industry;
- Prohibit anyone who has been associated with the industry for at least twenty years from ever becoming a public arbitrator, regardless of how long ago the association ended;
- Exclude from the definition of ''public arbitrator'' attorneys, accountants, or other professionals whose firms have derived ten percent or more of their annual revenue in the previous two years from clients involved in securities-related activities (''Ten-Percent Rule''); and
- Provide that investment advisers may not serve as public arbitrators, and may only serve as non-public arbitrators if they otherwise qualify as non-public.[6]

In 2007, FINRA again revised the definition of ''public arbitrator'' to:

- Exclude individuals who were employed by, or who served as an officer or director of, a company in a control relationship with a broker-dealer.
- Exclude individuals with a spouse or immediate family member who was employed by, or who served as an officer or director of, a company in a control relationship with a broker-dealer; and
- Clarify that people registered through a broker-dealer could not be public arbitrators even if they are employed by a non-broker-dealer (such as a bank).[7]

Finally, in 2008, FINRA revised the public arbitrator definition to add a dollar limit to the Ten-Percent Rule. The amended definition was designed to preclude an attorney, accountant, or other professional from serving as a public arbitrator if the individual's firm derived $50,000 or more in annual revenue in the past two years from professional services rendered to certain industry entities relating to customer

[1] 15 U.S.C. 78s(b)(1).

[2] 17 CFR 240.19b–4.

[3] *See* Exchange Act Release No. 68632 (Jan. 11, 2013), 78 FR 3925 (Jan. 17, 2013) (''Notice''). The comment period closed on February 7, 2013.

[4] *See* Letter from Steven B. Caruso, Maddox Hargett & Caruso, dated Jan. 16, 2013 (''Caruso Letter''); letter from David Neuman, Stoltmann Law Offices, dated Jan. 16, 2013 (''Neuman Letter''); letter from Richard M. Layne, Law Office of Richard M. Layne, dated Jan. 28, 2013 (''Layne Letter''); letter from Seth E. Lipner, Professor of Law, Zickloin School of Business, Baruch College, and Member, Deutsch & Lipner, dated Jan. 29, 2013 (''Lipner Letter''); letter from Carl J. Carlson, Tousley Brain Stephens, dated Jan. 29, 2013 (''Carlson Letter''); letter from David Harrison, Law Offices of David Harrison, dated Jan. 29, 2013 (''Harrison Letter''); letter from Philip M. Aidikoff, dated Jan. 29, 2013 (''Aidikoff Letter''); letter from Scott L. Silver, Silver Law Group, dated Jan. 30, 2013 (''Silver Letter''); letter from Robert A. Uhl, Adjunct Professor of Law, Securities Arbitration and Director, Pepperdine Investor Advocacy Clinic, and Partner, Aidikoff, Uhl & Bakhtiari, dated Jan. 30, 2013 (''Uhl Letter''); letter from Andrew A. Lipkowitz, Student Intern, and Christine Lazaro, Acting Director, St. John's University School of Law Securities Arbitration Clinic, dated Feb. 4, 2013 (''St. John's Letter''); letter from Robert C. Port, Cohen Goldstein Port & Gottlieb, dated Feb. 5, 2013 (''Port Letter''); letter from Lisa A. Catalano, dated Feb. 5, 2013 (''Catalano Letter''); letter from Scott R. Shewan, Pape & Shewan, dated Feb. 6, 2013 (''Shewan Letter''); letter from Jon C. Furgison, Law Offices of Jon C. Furgison, dated Feb. 6, 2013 (''Furgison Letter''); letter from Steven J. Gard, Reznicsek Fraser White & Shaffer, dated Feb. 6, 2013 (''Gard Letter''); letter from Jonathan W. Evans and Michael S. Edmiston, Jonathan W. Evans & Associates, dated Feb. 6, 2013 (''Evans and Edmiston Letter''); letter from Robert Savage, Visiting Assistant Clinical Professor, Florida International University College of Law, dated Feb. 7, 2013 (''Savage Letter I''); letter from Robert Savage dated Feb. 7, 2013 (''Savage Letter II''); letter from James A. Dunlap, Jr., James A. Dunlap Jr. & Associates, dated Feb. 7, 2013 (''Dunlap Letter''); letter from Diane Nygaard, Kenner, Schmitt & Nygaard, dated Feb. 7, 2013 (''Nygaard Letter''); letter from W. Scott Greco, Greco & Greco, dated Feb. 7, 2013 (''Greco Letter''); letter from A. Heath Abshure, NASAA President and Arkansas Securities Commissioner, dated Feb. 7, 2013 (''NASAA Letter''); letter from Robert S. Banks, Jr., Banks Law Office, dated Feb. 7, 2013 (''Banks Letter''); letter from Dale Ledbetter, Esq., Ledbetter and Associates, dated Feb. 7, 2013 (''Ledbetter Letter''); letter from Scott C. Ilgenfritz, President, Public Investors Arbitration Bar Association, dated Feb. 7, 2013 (''PIABA Letter''); letter from Elizabeth Zeck, Willoughby & Hoefer, dated Feb. 7, 2013 (''Zeck Letter''); letter from James A. Sigler, dated Feb. 7, 2013 (''Sigler Letter''); letter from Robert W. Goehring, dated Feb. 7, 2013 (''Goehring Letter''); letter from William S. Shepherd, Shepherd Smith Edwards & Kantas, dated Feb. 7, 2013 (''Shepherd Letter''); letter from Leonard Steiner, Beverly Hills, California, dated Feb. 7, 2013 (''Steiner Letter''); letter from Joseph Fogel, Fogel & Associates, dated Feb. 7, 2013 (''Fogel Letter''); letter from Richard A. Lewins, dated Feb. 7, 2013 (''Lewins Letter''); letter from Jenice L. Malecki, Malecki Law, dated Feb. 7, 2013 (''Malecki Letter''); letter from Mark E. Sanders, Halling & Cayo, dated Feb. 7, 2013 (''Sanders Letter''); letter from Jeffrey Sonn, Sonn & Erez, dated Feb. 7, 2013 (''Sonn Letter''); letter from Thomas C. Costello, dated Feb. 7, 2013 (''Costello Letter''); letter from Barry D. Estell, dated Feb. 7, 2013 (''Estell Letter''); letter from Royal Lea, dated Feb. 7, 2013 (''Lea Letter''); letter from Peter Mougey, Levin, Papantonio, Thomas, Mitchell, Rafferty & Proctor, dated Feb. 7, 2013 (''Mougey Letter''); letter from William A. Jacobson, Associate Clinical Professor, Cornell Law School, and Director, Cornell Securities Law Clinic, and Malavika Rao, Cornell Law School '14, dated Feb. 7, 2013 (''Cornell Letter''); letter from David T. Bellaire, Executive Vice President and General Counsel, Financial Services Institute, dated Feb. 7, 2013 (''FSI Letter''); letter from Theodore M. Davis, dated Feb. 8, 2013 (''Davis Letter''); letter from Nicholas J. Guiliano, dated Feb. 8, 2013 (''Guiliano Letter''); letter from Mitchell Ostwald, dated Feb. 8, 2013 (''Ostwald Letter''); letter from Charles Michael Tobin, The Tobin Law Firm, dated Feb 22, 2013 (''Tobin Letter''). Comment letters are available at *http://www.sec.gov.*

[5] *See* Letter from Margo A. Hassan, Assistant Chief Counsel, FINRA Dispute Resolution, to Elizabeth M. Murphy, Secretary, Commission, dated Mar. 11, 2013 (''Response Letter''). The text of the proposed rule change and a copy of FINRA's Response Letter are available on FINRA's Web site at *http://www.finra.org,* at the principal office of FINRA, and at the Commission's Public Reference Room. A copy of the Response Letter is also available on the Commission's Web site at *http://www.sec.gov.*

[6] *See* Exchange Act Rel. No. 49573 (April 16, 2004), 69 FR 21871 (Apr. 22, 2004) (File No. SR–NASD–2003–95) (Order Granting Approval to a Proposed Rule Change Relating to Arbitrator Classification and Disclosure in NASD Arbitrations). The changes were announced in Notice to Members 04–49 (June 2004).

[7] *See* Act Rel. No. 54607 (Oct. 16, 2006), 71 FR 62026 (Oct. 20, 2006) (File No. SR–NASD–2005–094) (Order Approving Proposed Rule Change and Amendment No. 1 Thereto Relating to Amendments to the Classification of Arbitrators Pursuant to Rule 10308 of the NASD Code of Arbitration Procedure). The changes were announced in Notice to Members 06–64 (Nov. 2006).

disputes concerning an investment account or transaction.[8]

The proposed rule change is designed to improve investor confidence in the neutrality of FINRA's public arbitrator roster. In particular, the proposed rule change would (a) exclude persons associated with a mutual fund or hedge fund from serving as public arbitrators and (b) require individuals to wait for two years after ending certain affiliations before they may be permitted to serve as public arbitrators.

FINRA has indicated that it would announce the effective date of the proposed rule change in a *Regulatory Notice* to be published no later than 60 days following Commission approval, and that the effective date would be no later than 30 days following publication of the *Regulatory Notice* announcing Commission approval.

III. Discussion of Comment Letters

As stated above, the Commission received 45 comment letters on the proposed rule change in response to the Notice. Thirty-eight of those commenters (represented by 39 comment letters) generally supported FINRA's proposal to revise the definition of ''public arbitrator'' to exclude persons associated with a mutual fund or hedge fund from serving as public arbitrators.[9] Of those commenters, however, many stated that while they agreed with the proposed rule change, they thought FINRA should exclude additional categories of persons from the definition of ''public arbitrator.'' Moreover, some otherwise supportive commenters thought that FINRA should lengthen the proposed cooling off period.

A. Exclusions

Three commenters suggested that the definition of ''public arbitrator'' should be further narrowed to expressly exclude from ever acting as a public arbitrator persons associated with issuers or sponsors of private placements, publicly offered non-traded REITs, variable insurance products, and other investment products.[10] These commenters also suggested that the definition of ''public arbitrator'' should exclude persons who have ever worked for more than a de minimis time as a stockbroker or investment advisor, as well as persons with more than a de minimis time of affiliation with a FINRA member firm, an investment advisory firm, a hedge fund, a mutual fund, or an issuer, sponsor, marketer, or seller of securities or investment products with embedded securities.[11] Similarly, two commenters suggested that anyone who has been licensed to do business in the securities industry or depended on the industry for more than a de minimis amount of his or her livelihood for any appreciable length of time should be excluded from the definition of ''public arbitrator.'' [12]

One commenter suggested that the definition of ''public arbitrator'' should exclude any attorney whose firm has derived $50,000 or ten percent or more of its annual revenue in the prior two years from professional services rendered to claimants in customer disputes concerning an investment account or transaction.[13] Another commenter suggested that individuals who have been employed by securities industry trade organizations such as FINRA should be barred from being classified as public arbitrators.[14]

One commenter generally approved of the proposed rule change but maintained that, in the context of customer disputes, FINRA's current definition of ''non-public arbitrator'' must be broadened to include the entire securities industry, particularly if FINRA plans to open up its forum to non-members.[15]

Finally, another commenter believed the proposed rule change should exclude additional categories of individuals from the definition of ''public arbitrator'' but ultimately disapproved of the proposed rule change on the grounds that it would continue to permit individuals who previously worked in and have financial interests connected to the securities industry to be classified as public arbitrators.[16] This commenter also expressed the view that the amended rule would continue to give FINRA staff too much discretion in classifying arbitrators. Another commenter expressed the same concern.[17]

B. Cooling-Off Period

Fourteen commenters suggested that FINRA's proposal to require individuals to wait for two years after ending certain affiliations before they may be permitted to serve as public arbitrators should be amended to increase the proposed ''cooling off'' period from two years to at least five years.[18] Five commenters suggested that the proposed cooling off period should generally be longer than two years.[19] Three commenters generally disapproved of the length of the proposed two-year cooling off period on the grounds that it would not serve the interests of investors.[20] Two commenters suggested expanding the proposed cooling off period from two years to ten.[21] One commenter suggested that no individual who has spent ten years or more in the securities industry should ever be classified as a public arbitrator.[22] Another commenter suggested that anyone associated with the industry for twenty or more years should be prohibited from ever becoming a public arbitrator.[23] Eleven commenters suggested that no cooling off period is sufficient and that only individuals who have never had an affiliation with the financial services industry should be eligible to serve as public arbitrators.[24]

In its Response Letter, FINRA stated that the purpose of the proposed rule change is to respond to investor representatives' concerns that certain arbitrators on the public roster were not perceived as public because of their background and experience. Specifically, FINRA stated that the proposed rule change would affect certain persons whose job precludes them from being classified as a public arbitrator but does not qualify them as a non-public arbitrator. In addition, FINRA stated that the proposed rule would require persons precluded by their job from being classified as a public arbitrator to wait two years

[8] *See* Exchange Act Rel. No. 57492 (Mar. 13, 2008), 73 FR 15025 (Mar. 20, 2008) (File No. SR–NASD–2007–021) (Order Approving Proposed Rule Change to Amend the Definition of Public Arbitrator). The changes were announced in Regulatory Notice 08–22 (May 2008).

[9] *See* Caruso Letter; Neuman Letter; Layne Letter; Lipner Letter; Carlson Letter; Aidikoff Letter; Silver Letter; Uhl Letter; St. John's Letter; Port Letter; Catalano Letter; Shewan Letter; Furgison Letter; Evans and Edmiston Letter; Savage Letter I; Savage Letter II; Dunlap Letter; Nygaard Letter; Greco Letter; NASAA Letter; Banks Letter; Ledbetter Letter; PIABA Letter; Zeck Letter; Sigler Letter; Goehring Letter; Shepherd Letter; Fogel Letter; Lewins Letter; Malecki Letter; Sanders Letter; Sonn Letter; Costello Letter; Estell Letter; Cornell Letter; Davis Letter; Guiliano Letter; Ostwald Letter; Tobin Letter.

[10] *See* PIABA Letter; Sanders Letter; Cornell Letter.

[11] *Id.*

[12] *See* Lewins Letter; Cornell Letter.

[13] *See* FSI Letter.

[14] *See* Davis Letter.

[15] *See* NASAA Letter.

[16] *See* Gard Letter.

[17] *See* Gard Letter; Estell Letter.

[18] *See* Caruso Letter; Neuman Letter; Layne Letter; Harrison Letter; Silver Letter; St. John's Letter; Catalano Letter; Zeck Letter; Shepherd Letter; Malecki Letter; Costello Letter; Estell Letter; Cornell Letter; Guiliano Letter.

[19] *See* Greco Letter; PIABA Letter; Fogel Letter; Lewins Letter; Sanders Letter.

[20] *See* Dunlap Letter; Nygaard Letter; Goehring Letter.

[21] *See* Carlson Letter; Evans and Edmiston Letter.

[22] *See* Uhl Letter.

[23] *See* Harrison Letter.

[24] *See* Lipner Letter; Aidikoff Letter; Silver Letter; Port Letter; Shewan Letter; Furgison Letter; Evans and Edmiston Letter; NASAA Letter; Sonn Letter; Davis Letter; Ostwald Letter.

before being eligible to join the public roster after moving to a job that would not otherwise disqualify them for service. FINRA maintained that the proposed two-year cooling off period responds to the concerns raised by investor representatives and would be a positive step toward enhancing investors' perception of fairness in FINRA's arbitration forum. FINRA also stated that it intends to further review, under the auspices of the National Arbitration and Mediation Committee, both the public and non-public arbitrator definitions with a view towards clarifying the definitions and reviewing additional issues such as those raised in comment letters on the proposed rule change. Therefore, FINRA declined to amend the proposed rule change.

IV. Commission's Findings

The Commission has carefully reviewed the proposed rule change, the comments received, and FINRA's Response Letter. Based on its review of the record, the Commission finds that the proposed rule change is consistent with the requirements of the Act and the rules and regulations thereunder applicable to a national securities association.[25] In particular, the Commission finds that the proposed rule change is consistent with Section 15A(b)(6) of the Act,[26] which requires, among other things, that FINRA rules must be designed to prevent fraudulent and manipulative acts and practices, to promote just and equitable principles of trade, and, in general, to protect investors and the public interest.

More specifically, the Commission finds that the proposed rule change to exclude persons associated with a mutual fund or hedge fund from serving as public arbitrators and require individuals to wait for two years after ending certain affiliations before they may be permitted to serve as public arbitrators would benefit investors and other participants in the forum by improving investor confidence in the neutrality of FINRA's public arbitrator roster. While the Commission appreciates the suggestions regarding exclusions from the definition of ''public arbitrator'' and the proposed two-year cooling off period, we believe that FINRA has responded adequately to comments. We also agree with the Response Letter's position that the proposed rule change should improve investors' perception about the fairness and neutrality of FINRA's public arbitrator roster, particularly given the Response Letter's representation that FINRA intends to conduct a comprehensive review of both the public and non-public arbitrator definitions with a view towards further clarifying the definitions and reviewing additional issues such as those raised in comment letters on the proposed rule change.

For the reasons stated above, the Commission finds that the proposed rule change is consistent with the Act and the rules and regulations thereunder.

V. Conclusion

It is therefore ordered, pursuant to Section 19(b)(2) of the Act,[27] that the proposed rule change (SR–FINRA–2013–003) be, and it hereby is, approved.

For the Commission, by the Division of Trading and Markets, pursuant to delegated authority.[28]

Kevin M. O'Neill,

Deputy Secretary.

[FR Doc. 2013–08323 Filed 4–9–13; 8:45 am]

BILLING CODE 8011–01–P

[25] In approving this proposed rule change, the Commission has considered the rule's impact on efficiency, competition, and capital formation. *See* 15 U.S.C. 78c(f).

[26] 15 U.S.C. 78*o*–3(b)(6).

[27] 15 U.S.C. 78s(b)(2).

[28] 17 CFR 200.30–3(a)(12).

SECURITIES AND EXCHANGE COMMISSION

[Release No. 34–69311; File No. SR–NYSEArca–2013–36]

Self-Regulatory Organizations; NYSE Arca, Inc.; Notice of Filing and Immediate Effectiveness of Proposed Rule Change Amending Standard Options Transaction Fees

April 4, 2013.

Pursuant to Section 19(b)(1)[1] of the Securities Exchange Act of 1934 (the ''Act'')[2] and Rule 19b–4 thereunder,[3] notice is hereby given that, on March 27, 2013, NYSE Arca, Inc. (the ''Exchange'' or ''NYSE Arca'') filed with the Securities and Exchange Commission (the ''Commission'') the proposed rule change as described in Items I, II, and III below, which Items have been prepared by the self-regulatory organization. The Commission is publishing this notice to solicit comments on the proposed rule change from interested persons.

I. Self-Regulatory Organization's Statement of the Terms of Substance of the Proposed Rule Change

The Exchange proposes to amend Standard Options Transaction Fees. The text of the proposed rule change is available on the Exchange's Web site at *www.nyse.com,* at the principal office of the Exchange, and at the Commission's Public Reference Room.

II. Self-Regulatory Organization's Statement of the Purpose of, and Statutory Basis for, the Proposed Rule Change

In its filing with the Commission, the self-regulatory organization included statements concerning the purpose of, and basis for, the proposed rule change and discussed any comments it received on the proposed rule change. The text of those statements may be examined at the places specified in Item IV below. The Exchange has prepared summaries, set forth in sections A, B, and C below, of the most significant parts of such statements.

A. Self-Regulatory Organization's Statement of the Purpose of, and the Statutory Basis for, the Proposed Rule Change

1. Purpose

The purpose of this filing is to modify the transaction charges for executing standard options trades on NYSE Arca. The Exchange proposes to raise the Take Liquidity Rate in both Penny Pilot Issues and non-Penny Pilot issues, while reducing the Post Liquidity credit for NYSE Arca Market Makers in non-Penny Pilot issues. The Exchange also proposes to modify the Customer Monthly Posting Credit Tiers and Qualifications to provide additional tiers to incent an increased level of Customer activity, and create new Tiers for a similar increase in Customer activity by providing higher Post Liquidity credits in non-Penny Pilot issues.

First, the Exchange proposes to no longer differentiate the Take Liquidity rate by contra party, so that a participant will have a single fee for Taking Liquidity in Penny Pilot issues. The Exchange proposes to raise the Take Liquidity rate for all non-Customers trading in Penny Pilot issues to $0.47 per contract.

Similarly, the Exchange proposes raising the Take Liquidity fee for Electronic Executions in non-Penny Pilot issues for all participants, with similar increases but differentiated fees by participant type. The Take Liquidity fee for LMMs trading in non-Penny Pilot issues will be increased from $0.78 to

[1] 15 U.S.C. 78s(b)(1).

[2] 15 U.S.C. 78a.

[3] 17 CFR 240.19b–4.

$0.84. The Take Liquidity fee for all NYSE Arca Market Makers will also increase to $0.84, from the current $0.80. The Take Liquidity fee for Firm and Broker Dealer transactions in non-Penny Pilot issues will increase from $0.85 to $0.87, while the Take Liquidity fee in non-Penny Pilot issues for Customers will increase from $0.79 to $0.82.

The Exchange proposes to modify the Post Liquidity rate for NYSE Arca Market Makers in non-Penny Pilot issues by reducing it to a credit of $0.05.

The increases in various Take Liquidity rates and the reduction of the Post Liquidity credit for NYSE Arca Market Makers in non-Penny Pilot issues is to provide sufficient funding for various Customer Post Liquidity credits.

NYSE Arca proposes to modify the Customer Monthly Posting Credit Tiers and Qualifications for Executions in Penny Pilot Issues. First, the Exchange proposes to eliminate the first and third qualification requirements for Tier 4. Secondly, the Exchange proposes to reduce the level of activity needed to meet the current second qualification for Tier 4 from 0.95% to 0.85% of Total Industry Customer equity and ETF option Average Daily Volume (ADV) from Posted Orders in Penny Pilot Issues, all account types. Thirdly, the Exchange proposes to add Tier 5 with a credit of $0.45 to be applied to posted electronic Customer executions in Penny Pilot issues. To earn the new Tier 5 credit, a firm must qualify by providing ''At least 0.50% of Total Industry Customer equity and ETF option ADV from Customer Posted Orders in both Penny Pilot and non-Penny Pilot Issues, plus executed ADV of Retail Orders of 0.3% of U.S. Equity Market Share Posted and Executed on NYSE Arca Equity Market''. The Exchange also proposes an additional Tier, Tier 6, with a qualification of ''At least 0.95% of Total Industry Customer equity and ETF option ADV from Customer Posted Orders in both Penny Pilot and non-Penny Pilot Issues'', with a credit for meeting the qualification of $0.47 per contract applied to posted electronic executions in Penny Pilot issues.

The Exchange also proposes the creation of Customer Posting Credit Tiers in Non-Penny Pilot Issues with two Tiers to receive a higher credit to be applied to posted electronic Customer executions in non-Penny Pilot issues. To qualify for the first tier, Tier A, an Order Flow Provider would need to provide ''At least 0.50% of Total Industry Customer equity and ETF option ADV from Customer Posted Orders in both Penny Pilot and Non-Penny Pilot Issues Plus executed ADV of Retail Orders of 0.3% ADV of U.S. Equity Market Share Posted and Executed on NYSE Arca Equity Market'', the same criterion as Tier 5 in the Customer Posted Liquidity Credits for Penny Pilot issues. Meeting the qualifications for Tier A will provide a credit applied to posted electronic Customer executions in non-Penny Pilot issues of $0.80.

The qualification basis for Tier B would be the same as for the new Tier 6 in the Customer Tiers for Posting Credits in Penny Pilot Issues: at least 0.95% of Total Industry Customer equity and ETF option ADV from Customer posted orders in both Penny Pilot and non-Penny Pilot issues. Order Flow Provider (''OFP'') firms that meet the qualification would, in addition to the higher tier in Penny Pilot issues, also receive a credit of $0.81 applied to posted electronic executions in non-Penny Pilot names.

The changes to various Customer Post Liquidity credit tiers, and the creation of the new Customer Posting Credit Tiers in Non-Penny Pilot Issues, are to encourage additional Customer order flow to be sent to the Exchange.

NYSE Arca also proposes additional language in endnote 8, to define Retail Orders. A Retail Order must qualify for the Retail Order Tier set forth in the Schedule of Fees and Charges for NYSE Arca Equities, Inc.

NYSE Arca intends for the new fees to be in effect on April 1, 2013.

2. Statutory Basis

The Exchange believes that the proposed rule change is consistent with Section 6(b) of the Act,[4] in general, and furthers the objectives of Sections 6(b)(4) and 6(b)(5) of the Act,[5] in particular, because it provides for the equitable allocation of reasonable dues, fees, and other charges among its members, issuers and other persons using its facilities and does not unfairly discriminate between customers, issuers, brokers or dealers.

The Exchange proposal to raise certain Take Liquidity fees in Penny Pilot issues is reasonable in that all of the non-Customer rates are being raised to a rate that is already applied to certain transactions in Penny Pilot issues. While the rate for Customers will remain at a slightly lower level, this is not unfairly discriminatory, as non-Customers want to attract Customer order flow, and Customers have other costs, such as commissions, which are not charged to non-Customers.

The Exchange proposal to raise the Take Liquidity fees in non-Penny Pilot names is reasonable because they are within the established range of similar fees charged by other markets. One exchange charges a Take Liquidity fee of as much as $0.89 per contract. In addition, the increase in Take Liquidity fees is also non- discriminatory because the Exchange is making a similar increase for all participant types. While the fees are not identical, they are equitable in that the increases are by similar amounts, and the resultant fees are differentiated by the overall costs and obligations of the different participants. The Exchange will now be charging the same Take Liquidity rate to both Market Makers and LMMs. While the rate for Firms and Broker Dealers is slightly higher, it is not unreasonably discriminatory because Market Makers have higher fees for Trading Permits and have market maker obligations which require them to pay for equipment and connectivity. Customers will pay a slightly lower Take Liquidity rate because Customers have other costs not borne by non-Customers, and a lower fee for Customers is not discriminatory because non-Customers wish to have Customer orders attracted to the Exchange by having lower fees.

The Exchange proposal to reduce the Post Liquidity credit in non-Penny Pilot issues for NYSE Market Makers is reasonable in that the range of fees for Market Maker transactions in non-Penny Pilot issues varies across all market centers from a credit of $0.70 to a fee of $0.85. It is not unfairly discriminatory as different market participants have different costs and obligations. It is not unfairly discriminatory to have a higher Post Liquidity credit for Lead Market Makers as compared to other NYSE Arca Market Makers because LMMs have a higher quoting obligation and higher costs and there are barriers to entry and exit of appointment as an LMM that are not imposed on other Market Makers.

The NYSE Arca proposal to modify the Customer Monthly Posting Credit Tiers and Qualifications in Penny Pilot issues is reasonable in that it sets credits within the range of credits offered for similar Customer activity on other markets, which range as high as $0.48. It is not unreasonably discriminatory to set credit tiers to incent higher amounts of Customer volume, as non-Customers wish to have Customer orders attracted to the Exchange by having more attractive fees. The differing Credit Tiers are not unreasonably discriminatory amongst various OFPs because, while

[4] 15 U.S.C. 78f(b).

[5] 15 U.S.C. 78f(b)(4) and (5).

firms may be allowed to meet some tiers with a variety of sources, most of the incentive levels can still be met by an Order Flow Provider whose business consists only of Customer order flow. And while the new Tier 5 is available for Order Flow Firms who also have an Equity Trading Permit (''ETP''), those firms who only have an Options Trading Permit may still achieve the highest tier and greatest Customer Posting Credit by meeting a reasonable level of market share and including all options volume, from both Penny Pilot and non-Penny Pilot issues, to meet that market share level.

Additionally, the NYSE Arca creation of new Customer Posting Credit Tiers in non-Penny Pilot issues is reasonable and non-discriminatory in that it extends upon the common and reasonable concept of rewarding higher Customer volume with higher Post Liquidity credits by applying it to non-Penny Pilot issues. As stated before, it is not unreasonably discriminatory to set credit tiers to incent higher amounts of Customer volume, as non-Customers wish to have Customer orders attracted to the Exchange by having more attractive fees. As with Customer Tier 6 in the Customer Monthly Posting Credit Tiers and Qualifications in Penny Pilot issues, those firms who only have an Options Trading Permit may still achieve Tier B and the greatest Customer Posting Credit by meeting a reasonable level of market share and including all options volume, from both Penny Pilot and non-Penny Pilot issues, to meet that market share level.

In addition, the Exchange believes that the addition of the proposed language in end note 8 to define Retail Orders, which refers to qualification for the Retail Order Tier set forth in the Schedule of Fees and Charges for NYSE Arca Equities, Inc., will provide clarifying language to investors regarding calculation of ADV executed on NYSE Arca Equity Market, for purposes of the proposed charges.

B. Self-Regulatory Organization's Statement on Burden on Competition

The Exchange does not believe that the proposed rule change will impose any burden on competition that is not necessary or appropriate in furtherance of the purposes of the Act.

The Exchange believes that the new Take Liquidity rates in Penny Pilot issues does not impose a burden on competition because it sets the same rate for all non-Customer participants, regardless of contra party.

Similarly, by raising all of the Take Liquidity rates for non-Penny Pilot issues by similar amounts, the new Take Liquidity fees for non-Penny Pilot issues do not impose a burden on competition because all participants are affected to the same extent.

In addition, the adjustment of the NYSE Arca Market Maker Post Liquidity rate in non-Penny Pilot issues reduces the burden on competition because it aligns the NYSE Market Maker rate to an equitable balance that reflects both the higher costs of being a Lead Market Maker and the lower overall costs of other non-Customers.

The Exchange notes that the modifications to the Customer Monthly Credit Tiers and Qualifications reduces the burden on competition by providing additional incentives for Customers to bring orders to the Exchange. This incents competition because non-Customers wish to have Customer orders attracted to the Exchange by having attractive fees and incentives.

Similarly, the creation of new Customer Posting Credit Tiers for higher Customer credits in non-Penny Pilot issues does not impose a burden on competition but incents additional order flow to come to NYSE Arca and will increase competition amongst non-Customers to trade against Customer orders.

Finally, the Exchange notes that it operates in a highly competitive market in which market participants can readily favor competing venues. In such an environment, the Exchange must continually review, and consider adjusting, its fees and credits to remain competitive with other exchanges. For the reasons described above, the Exchange believes that the proposed rule change reflects this competitive environment.

C. Self-Regulatory Organization's Statement on Comments on the Proposed Rule Change Received From Members, Participants, or Others

No written comments were solicited or received with respect to the proposed rule change.

III. Date of Effectiveness of the Proposed Rule Change and Timing for Commission Action

The foregoing rule change is effective upon filing pursuant to Section 19(b)(3)(A) [6] of the Act and subparagraph (f)(2) of Rule 19b–4 [7] thereunder, because it establishes a due, fee, or other charge imposed by the Exchange.

At any time within 60 days of the filing of such proposed rule change, the Commission summarily may temporarily suspend such rule change if it appears to the Commission that such action is necessary or appropriate in the public interest, for the protection of investors, or otherwise in furtherance of the purposes of the Act. If the Commission takes such action, the Commission shall institute proceedings under Section 19(b)(2)(B) [8] of the Act to determine whether the proposed rule change should be approved or disapproved.

IV. Solicitation of Comments

Interested persons are invited to submit written data, views, and arguments concerning the foregoing, including whether the proposed rule change is consistent with the Act. Comments may be submitted by any of the following methods:

Electronic Comments

- Use the Commission's Internet comment form (*http://www.sec.gov/rules/sro.shtml*); or
- Send an email to *rule-comments@sec.gov.* Please include File Number SR–NYSEArca–2013–36 on the subject line.

Paper Comments

- Send paper comments in triplicate to Elizabeth M. Murphy, Secretary, Securities and Exchange Commission, 100 F Street NE., Washington, DC 20549–1090.

All submissions should refer to File Number SR–NYSEArca–2013–36. This file number should be included on the subject line if email is used. To help the Commission process and review your comments more efficiently, please use only one method. The Commission will post all comments on the Commission's Internet Web site (*http://www.sec.gov/rules/sro.shtml).* Copies of the submission, all subsequent amendments, all written statements with respect to the proposed rule change that are filed with the Commission, and all written communications relating to the proposed rule change between the Commission and any person, other than those that may be withheld from the public in accordance with the provisions of 5 U.S.C. 552, will be available for Web site viewing and printing in the Commission's Public Reference Room, 100 F Street NE., Washington, DC 20549, on official business days between the hours of 10:00 a.m. and 3:00 p.m. Copies of the filing also will be available for inspection and copying at the principal office of the Exchange. All comments

[6] 15 U.S.C. 78s(b)(3)(A).

[7] 17 CFR 240.19b–4(f)(2).

[8] 15 U.S.C. 78s(b)(2)(B).

received will be posted without change; the Commission does not edit personal identifying information from submissions. You should submit only information that you wish to make available publicly. All submissions should refer to File Number SR–NYSEArca–2013–36 and should be submitted on or before May 1, 2013.

For the Commission, by the Division of Trading and Markets, pursuant to delegated authority.[9]

Kevin M. O'Neill,

Deputy Secretary.

[FR Doc. 2013–08331 Filed 4–9–13; 8:45 am]

BILLING CODE 8011–01–P

SECURITIES AND EXCHANGE COMMISSION

[Release No. 34–69309; File No. SR–BYX–2013–011]

Self-Regulatory Organizations; BATS–Y Exchange, Inc.; Notice of Filing and Immediate Effectiveness of a Proposed Rule Change To Modify Market Maker Peg Order Functionality

April 4, 2013.

Pursuant to Section 19(b)(1) of the Securities Exchange Act of 1934 (''Act'')[1] and Rule 19b–4 thereunder,[2] notice is hereby given that, on March 22, 2013, BATS–Y Exchange, Inc. (the ''Exchange'' or ''BYX'') filed with the Securities and Exchange Commission (''Commission'') the proposed rule change as described in Items I and II below, which Items have been prepared by the Exchange. The Commission is publishing this notice to solicit comments on the proposed rule change from interested persons.

I. Self-Regulatory Organization's Statement of the Terms of Substance of the Proposed Rule Change

The Exchange is filing with the Commission a proposal to amend the functionality of the Market Maker Peg Order to more closely resemble analogous order types offered by NASDAQ Stock Market LLC (''Nasdaq'') and EDGX Exchange, Inc. (''EDGX'')[3] and to make certain clarifying changes to the rule.

The text of the proposed rule change is available at the Exchange's Web site at *http://www.batstrading.com,* at the principal office of the Exchange, and at the Commission's Public Reference Room.

II. Self-Regulatory Organization's Statement of the Purpose of, and Statutory Basis for, the Proposed Rule Change

In its filing with the Commission, the Exchange included statements concerning the purpose of and basis for the proposed rule change and discussed any comments it received on the proposed rule change. The text of these statements may be examined at the places specified in Item IV below. The Exchange has prepared summaries, set forth in Sections A, B, and C below, of the most significant parts of such statements.

A. Self-Regulatory Organization's Statement of the Purpose of, and Statutory Basis for, the Proposed Rule Change

1. Purpose

The purpose of this proposed rule change is to amend BYX Rule 11.9(c)(16). Specifically, the Exchange proposes to: (1) Remove the option to allow Market Maker Peg Orders to be priced and executed during the Pre-Opening Session[4] and the After Hours Trading Session[5] and to cancel all Market Maker Peg Orders that are on the BATS [sic] Book[6] at the end of Regular Trading Hours; (2) remove the option for a Market Maker Peg Order to be automatically cancelled where there is no NBBO and the order is priced based on the last reported sale from the single plan processor; (3) remove the functionality that would allow a Market Maker to designate a more aggressive offset from the NBBO; (4) make clear that a Market Maker Peg Order will not peg to itself; and (5) make clear that only registered Market Makers are eligible to enter Market Maker Peg Orders. The Exchange is also proposing to reaffirm that it will continue to offer the present automated functionality provided to market makers under Rule 11.8(e) for a period of three months after the implementation of the Market Maker Peg Order.

Market Maker Peg Orders Entered Outside of Regular Trading Hours

The Exchange is proposing to amend BYX Rule 11.9(c)(16) to eliminate the option for Market Maker Peg Orders to be priced and executed outside of Regular Trading Hours and to cancel all Market Maker Peg Orders that are on the BATS [sic] Book at the end of Regular Trading Hours. As currently written, a Market Maker may enter a Market Maker Peg Order at any time during the Pre-Opening Session[7] or Regular Trading Hours, with an order entered during the Pre-Opening Session, by default, to remain unpriced and unexecutable until Regular Trading Hours, however, a Market Maker could designate that the order be priced and executable immediately upon entry during the Pre-Opening Session.

Specifically, the Exchange is proposing rule changes to eliminate the ability for a Market Maker to designate that an order be priced and executable immediately upon entry during the Pre-Opening Session, to state that all Market Maker Peg Orders that are on the BATS [sic] Book expire at the end of Regular Trading Hours, and to reject all Market Maker Peg Orders entered during the After Hours Trading Session. The Exchange is proposing these changes in order to make its Market Maker Peg Order functionality more closely resemble that of Market Maker Peg Orders at Nasdaq and EDGX. Because the Market Maker Peg Order is designed to help Market Makers meet their quoting obligation on the Exchange and the Exchange's quoting obligations do not include any obligations outside of Regular Trading Hours, the Exchange does not believe that allowing Market Maker Peg Orders to be priced and executed outside of Regular Trading Hours provides Market Makers with any benefit that would warrant the additional complexity that the functionality would require. As such, the Exchange believes that eliminating the ability to have Market Maker Peg Orders price and execute outside of Regular Trading Hours will, in conjunction with the other changes proposed in this filing, act to simplify the Market Maker Peg Order type, thereby increasing its utility to Market Makers and decreasing the likelihood of unforeseen complications.

Pricing Market Maker Peg Orders to the Last Reported Sale

The Exchange is proposing to amend BYX Rule 11.9(c)(16) to eliminate the functionality that would allow a Market Maker to designate Market Maker Peg Orders to be cancelled where there is no NBBO and the order would otherwise be priced to the last reported sale from the single plan processor. Currently, a Market Maker may optionally designate

[9] 17 CFR 200.30–3(a)(12).

[1] 15 U.S.C. 78s(b)(1).

[2] 17 CFR 240.19b–4.

[3] The Exchange notes that EDGA Exchange, Inc. also has an order type identical to that of EDGX, however, for the purposes of this filing, the Exchange is referring only to the order type functionality available at EDGX.

[4] Pre-Opening Session means the time between 8:00 a.m. and 9:30 a.m. Eastern Time.

[5] After Hours Trading Session means the time between 4:00 p.m. and 5:00 p.m. Eastern Time.

[6] BATS [sic] Book means the System's electronic file of orders.

[7] The Pre-Opening Session means the time between 8:00 a.m. and 9:30 a.m. Eastern Time.

that a Market Maker Peg Order be cancelled where it would be priced to the last reported sale from the single plan processor.

The Exchange is proposing to eliminate this functionality in order to make its Market Maker Peg Order functionality more closely resemble that of Market Maker Peg Orders at Nasdaq and EDGX. Additionally, the Exchange believes that removing the ability to designate that Market Maker Peg Orders be cancelled where the order would peg based on the last reported sale will, in conjunction with the other changes proposed in this filing, act to simplify the Market Maker Peg Order type, thereby increasing its utility to Market Makers and decreasing the likelihood of unforeseen complications.

Eliminating More Aggressive Offsets From the NBBO

The Exchange is proposing to amend BYX Rule 11.9(c)(16) in order to eliminate the functionality that would allow a Market Maker to designate a more aggressive offset from the NBBO than the Designated Percentage. As currently written, the rule allows a Market Maker to designate a more aggressive offset from the NBBO and a percentage away from the NBBO or the price of the last reported sale from the responsible single plan processor at which the order will be adjusted back to the Market Maker-designated offset.

The Exchange is proposing to eliminate this functionality in order to, as mentioned above, simplify the Market Maker Peg Order functionality. Market Makers will still be able to enter orders priced more aggressively than the automatically priced Market Maker Peg Orders and will have access to existing pegged order functionality. The Exchange believes that this existing functionality will provide Market Makers with the necessary tools to enter orders priced more aggressively than the Market Maker Peg Order while not adding an additional level of complexity by requiring Market Makers to establish additional parameters for their Market Maker Peg Orders.

Preventing Market Maker Peg Orders From Pegging to Itself

The Exchange is proposing to amend BYX Rule 11.9(c)(16) in order to make clear that a Market Maker Peg Order will not use its own pegged price as the basis for adjusting the order's price. Where there is no NBBO and a Market Maker Peg Order, whether upon entry or already on the BATS [sic] Book, is pegged to the last reported sale from the single plan processor, the Market Maker Peg Order will be reported to the SIPs and will be disseminated to the Exchange as the NBBO. The Exchange is seeking to make clear that, in this situation, the Exchange will not reprice the order based on the fact that the Market Maker Peg Order is the NBBO. Rather, the Exchange will only adjust the market Maker Peg Order when there is either a new consolidated last sale or a new NBBO is established by a national securities exchange.

Restriction of Market Maker Peg Orders to Market Makers

The Exchange is proposing to amend BYX Rule 11.9(c)(16) in order to make clear that only a registered Market Maker can enter a Market Maker Peg Order. The Exchange believes that, as currently constructed, only a registered Market Maker is allowed to enter Market Maker Peg Orders under Rule 11.9(c)(16) despite lacking any explicit language stating as much. As discussed above, the order type was created to help Market Makers comply with their quoting requirements on the Exchange and, for that reason, the behaviors of the Market Maker Peg Order are based specifically on the Exchange's quoting requirements. The Exchange does not make the order type available to other market participants because it does not believe that there would be any demand for the order type or that it would be particularly useful for market participants that are not Market Makers, especially given the availability of more customizable peg orders.[8] In order to make it abundantly clear, however, the Exchange is proposing to amend the rule to explicitly state that only registered Market Makers can enter Market Maker Peg Orders.

2. Statutory Basis

The Exchange believes that the proposal is consistent with Section 6(b) of the Act [9] in general, and furthers the objectives of Section 6(b)(5) of the Act [10] in particular, in that it is designed to promote just and equitable principles of trade, to foster cooperation and coordination with persons engaged in regulating, clearing, settling, processing information with respect to, and facilitating transactions in securities, to remove impediments to and perfect the mechanism of a free and open market and a national market system, and, in general to protect investors and the public interest. The Exchange believes that eliminating the ability of Market Maker Peg Orders to be priced and executed outside of Regular Trading Hours and cancelling all Market Maker Peg Orders on the BATS [sic] Book at the end of Regular Trading Hours will result in a continuing benefit to market participants by simplifying the process of entering and cancelling Market Maker Peg Orders and including only the functionality necessary for Market Makers to meet their regulatory obligations. Additionally, the Exchange believes that the proposal will foster cooperation and coordination with processing information with respect to transactions in securities by preventing the Exchange from sending a potentially significantly larger than normal number of orders to the SIPs at the beginning of Regular Trading Hours when Market Maker Peg Orders entered during the Pre-Opening Session would be priced and become eligible for execution at exactly the same time. Similarly, the Exchange believes that eliminating the option to have a Market Maker Peg Order automatically cancel an order that would be priced based on the last reported sale from the single plan processor will result in a continuing benefit to market participants by simplifying the functionality and corresponding complexity of implementation of Market Maker Peg Orders. The Exchange also believes that removing the functionality that would allow a Market Maker to designate a more aggressive offset from the NBBO will result in a continuing benefit to market participants by further simplifying the functionality of Market Maker Peg Orders to include only the functionality necessary for Market Makers to meet their regulatory obligations. The Exchange does not believe that removing this functionality will disincentivize Market Makers from posting more aggressive quotes. Rather, the Exchange believes that, similar to the market maker quoter, Market Makers will use the Market Maker Peg Order to satisfy the Exchange's quoting requirements, while continuing to enter and manage more aggressively priced orders using existing order types.

B. Self-Regulatory Organization's Statement on Burden on Competition

The Exchange does not believe that the proposed rule change will impose any burden on competition not necessary or appropriate in furtherance of the purposes of the Act. To the contrary, the proposed changes to the Market Maker Peg Order type functionality will further align the Exchange's functionality with that offered by certain other competing market centers. Specifically, the rule

[8] Including Primary Pegged Order, Market Pegged Order, Mid-Point Peg Order, and Alternative Mid-Point Peg Order [sic], as described in BYX Rules 11.9(c)(8) and (9).

[9] 15 U.S.C. 78f(b).

[10] 15 U.S.C. 78f(b)(5).

change proposed herein is based on Nasdaq Rule 4751(f)(15) and EDGX Rule 11.5(c)(15).[11] By adopting changes to functionality to align with functionality in place elsewhere, as well as simplifying such functionality, the Exchange believes that it is reducing the potential for confusion amongst market participants.

C. Self-Regulatory Organization's Statement on Comments on the Proposed Rule Change Received From Members, Participants, or Others

The Exchange has neither solicited nor received written comments on the proposed rule change.

III. Date of Effectiveness of the Proposed Rule Change and Timing for Commission Action

Because the foregoing proposed rule change does not significantly affect the protection of investors or the public interest, does not impose any significant burden on competition, and, by its terms, does not become operative for 30 days from the date on which it was filed, or such shorter time as the Commission may designate, it has become effective pursuant to Section 19(b)(3)(A) of the Act[12] and Rule 19b–4(f)(6) thereunder.[13]

The Exchange has requested that the Commission waive the 30-day operative delay. The Commission believes that waiving the 30-day operative delay is consistent with the protection of investors and the public interest. Doing so will allow the Exchange to make the improvements and clarifications to the Market Maker Peg Order effective immediately and address any technical or operative issues that member organizations may experience if the Exchange's implementation of Market Maker Peg Order is different from that of other exchanges. Therefore, the Commission designates the proposal operative upon filing.[14]

At any time within 60 days of the filing of the proposed rule change, the Commission summarily may temporarily suspend such rule change if it appears to the Commission that such action is necessary or appropriate in the public interest, for the protection of investors, or otherwise in furtherance of the purposes of the Act. If the Commission takes such action, the Commission shall institute proceedings under Section 19(b)(2)(B)[15] of the Act to determine whether the proposed rule change should be approved or disapproved.

IV. Solicitation of Comments

Interested persons are invited to submit written data, views, and arguments concerning the foregoing, including whether the proposed rule change is consistent with the Act. Comments may be submitted by any of the following methods:

Electronic Comments

- Use the Commission's Internet comment form (*http://www.sec.gov/rules/sro.shtml*); or
- Send an email to *rule-comments@sec.gov.* Please include File Number SR–BYX–2013–011 on the subject line.

Paper Comments

- Send paper comments in triplicate to Elizabeth M. Murphy, Secretary, Securities and Exchange Commission, 100 F Street NE., Washington, DC 20549–1090.

All submissions should refer to File Number SR–BYX–2013–011. This file number should be included on the subject line if email is used. To help the Commission process and review your comments more efficiently, please use only one method. The Commission will post all comments on the Commission's Internet Web site (*http://www.sec.gov/rules/sro.shtml*). Copies of the submission, all subsequent amendments, all written statements with respect to the proposed rule change that are filed with the Commission, and all written communications relating to the proposed rule change between the Commission and any person, other than those that may be withheld from the public in accordance with the provisions of 5 U.S.C. 552, will be available for Web site viewing and printing in the Commission's Public Reference Room, 100 F Street NE., Washington, DC 20549, on official business days between the hours of 10:00 a.m. and 3:00 p.m. Copies of the filing also will be available for inspection and copying at the principal office of the Exchange. All comments received will be posted without change; the Commission does not edit personal identifying information from submissions. You should submit only information that you wish to make available publicly. All submissions should refer to File Number SR–BYX–2013–011 and should be submitted on or before May 1, 2013.

For the Commission, by the Division of Trading and Markets, pursuant to delegated authority.[16]

Kevin M. O'Neill,

Deputy Secretary.

[FR Doc. 2013–08329 Filed 4–9–13; 8:45 am]

BILLING CODE 8011–01–P

[11] *See* Securities Exchange Act Release Nos. 67203 (June 14, 2012), 77 FR 37086 (June 20, 2012) (SR NASDAQ–2012–066); 67959 (October 2, 2012), 77 FR 61449 (October 9, 2012) (SR–EDGX–2012–44); 68596 (January 7, 2013), 78 FR 2477 (January 11, 2013) (SR–EDGX–2012–49).

[12] 15 U.S.C. 78s(b)(3)(A).

[13] 17 CFR 240.19b–4(f)(6). In addition, Rule 19b–4(f)(6)(iii) requires the Exchange to give the Commission written notice of the Exchange's intent to file the proposed rule change, along with a brief description and text of the proposed rule change, at least five business days prior to the date of filing of the proposed rule change, or such shorter time as designated by the Commission. The Exchange has satisfied this requirement.

[14] For purposes only of waiving the 30-day operative delay, the Commission has considered the proposed rule's impact on efficiency, competition, and capital formation. *See* 15 U.S.C. 78c(f).

[15] 15 U.S.C. 78s(b)(2)(B).

[16] 17 CFR 200.30–3(a)(12).

SECURITIES AND EXCHANGE COMMISSION

[Release No. 34–69295; File No. SR–NYSE–2013–27]

Self-Regulatory Organizations; New York Stock Exchange LLC; Notice of Filing and Immediate Effectiveness of Proposed Rule Change Amending NYSE Rule 1000

April 4, 2013.

Pursuant to Section 19(b)(1)[1] of the Securities Exchange Act of 1934 (the ''Act'')[2] and Rule 19b–4 thereunder,[3] notice is hereby given that on April 2, 2013, New York Stock Exchange LLC (''NYSE'' or the ''Exchange'') filed with the Securities and Exchange Commission (the ''Commission'') the proposed rule change as described in Items I and II below, which Items have been prepared by the self-regulatory organization. The Commission is publishing this notice to solicit comments on the proposed rule change from interested persons.

I. Self-Regulatory Organization's Statement of the Terms of Substance of the Proposed Rule Change

The Exchange proposes to phase out the functionality associated with liquidity replenishment points (''LRPs'') to coincide with the implementation of the Limit Up—Limit Down Plan (the ''Plan'') by adding language to NYSE Rule 1000 that, beginning on April 8, 2013, LRPs will no longer be in effect for Tier 1 NMS Stocks, and on the earlier of August 1, 2013 or such date as Phase II of the Limit Up—Limit Down Plan is implemented, LRPs will no longer be in effect for all NMS Stocks. The text of the proposed rule change is

[1] 15 U.S.C.78s(b)(1).

[2] 15 U.S.C. 78a.

[3] 17 CFR 240.19b–4.

available on the Exchange's Web site at *www.nyse.com,* at the principal office of the Exchange, on the Commission's Web site at *http://www.sec.gov,* and at the Commission's Public Reference Room.

II. Self-Regulatory Organization's Statement of the Purpose of, and Statutory Basis for, the Proposed Rule Change

In its filing with the Commission, the self-regulatory organization included statements concerning the purpose of, and basis for, the proposed rule change and discussed any comments it received on the proposed rule change. The text of those statements may be examined at the places specified in Item IV below. The Exchange has prepared summaries, set forth in sections A, B, and C below, of the most significant parts of such statements.

A. Self-Regulatory Organization's Statement of the Purpose of, and Statutory Basis for, the Proposed Rule Change

1. Purpose

The Exchange proposes to phase out the functionality associated with LRPs to coincide with the implementation of the Plan by amending Rule 1000 to provide that, beginning on April 8, 2013, LRPs will no longer be in effect for Tier 1 NMS Stocks, and beginning on the earlier of August 1, 2013 or such date as Phase II of the Limit Up—Limit Down Plan is implemented, LRPs will no longer be in effect for all NMS stocks.

The LRP mechanism was approved in 2006 to address market volatility on the Exchange.[4] Specifically, the Exchange uses LRPs, which are triggered by rapid price movements over a short period of time, to moderate volatility in a security by temporarily converting the electronic market for the security into an auction market to afford new trading interests the opportunity to add liquidity. The Exchange additionally believes that LRPs were effective in moderating some of the impact from the events of May 6, 2010, for NYSE trading customers as evidenced by the lack of erroneous trades on the Exchange. LRPs also served as the basis for the Plan,[5] as well as the implementation of the short sale circuit breakers. Indeed, for many years, LRPs have been a key selling point of the Exchange to both investors and listed companies who, like the Exchange, believe that stable prices further the purposes of protecting investors against unnecessary price swings thereby enhancing investor confidence in the U.S. securities markets. LRPs have delivered concrete benefits to public investors in the many erroneous or aberrant trades they have prevented, and have allowed the Exchange to communicate in an orderly way with issuers during periods of market stress.

Nevertheless, the Exchange proposes to phase out LRPs as a result of the scheduled implementation of the Plan, which was adopted in response to the market disruption of May 6, 2010. Specifically, in addressing comments focused on the relationship between the Plan and exchange-specific volatility mechanisms—such as the NYSE's LRPs—the Commission stated that it was ''aware of the potential for unnecessary complexity that could result if the Plan were adopted, and exchange-specific volatility mechanisms were retained'' and ''[t]o this end, the Commission *expects* that upon implementation of the Plan, such exchange-specific volatility mechanisms would be *discontinued* by the respective exchanges.''[6]

Although the Exchange understands the need for industry-wide responses to address extraordinary volatility events such as the market disruption that occurred on May 6, 2010, the Exchange does not agree that such initiatives should come at the expense of existing investor protection mechanisms, particularly without any impact analysis, because such initiatives can have unintended consequences to the detriment of investors and the marketplace as a whole. In light of the fact that only potential concerns were noted and there is no evidence of systemic problems that would be caused by simultaneously operating the Plan and LRPs, the Exchange continues to believe that data could have been collected during the Plan pilot period and would have served as an excellent testing ground to determine if both the Limit Up—Limit Down bands as well as the LRP bands could function effectively together. The Exchange believes that only after such careful monitoring could an informed determination be made that accurately assesses whether the functionalities were redundant or conflicting so as to warrant continuing with one or the other, or both. The Plan pilot period could also have afforded the Commission and the Exchange the ability to compile and analyze data that would contribute to the making of an informed decision with respect to the merits of both programs.

Indeed, there is nothing particularly complex about how LRPs would have operated alongside the Plan. As the LRP bands are generally narrower than the Limit Up—Limit Down bands, LRPs might have continued to serve their current purpose of creating a temporary auction market buffer to rapid and extraordinary price movements occurring in the electronic market. They would have been triggered within Limit Up—Limit Down bands, would have applied only to the Exchange, and trading on away markets could have continued to occur because the NYSE quotation is not protected during an LRP. Moreover, the Exchange believes that any incremental complexity the LRPs would have added to the operation of the Plan would have been outweighed substantially by their proven effectiveness in minimizing rapid price movements that are driven by erroneous orders.

Furthermore, the Exchange wishes to respectfully, but strenuously, object not only to the substance of the Commission's decision to effectively insist that the Exchange abandon LRPs, but also the policy implications of the decision. From a policy perspective, the Commission's required removal of LRPs would seem to embody an effort to force markets ''into a single mold''[7] for purposes of addressing extraordinary volatility, and to obstruct the development of ''subsystems within the national market system,'' objectives which are inconsistent with the 1975 Act Amendments.[8]

[4] *See* Securities Exchange Act Release No. 53539 (March 22, 2006), 71 FR 16353 (March 31, 2006) (SR–NYSE–2004–05).

[5] *See* Securities Exchange Act Release No. 67091 (May 31, 2012), 77 FR 33498 (June 6, 2012) (''LULD Release'').

[6] *Id.* at n. 182 (emphasis added).

[7] *See* H.R. Rep. No. 94–123, at 51 (1975) (emphasis added) (''The objective is to enhance competition and to allow economic force, interacting within a fair regulatory field, to arrive at appropriate variations of practices and services. *Neither the markets themselves nor the broker-dealer participant in these markets should be forced into a single mold.* Market centers should compete and evolve according to their own natural genius and all actions to compel uniformity must be measured and justified as necessary to accomplish the salient purposes of the Securities Exchange Act, assure the maintenance of fair and orderly markets and to provide price protection for the orders of investors.'').

[8] *See* S. Rep. No. 94–75 (1975). While there is no disputing that Congress intended to grant broad and discretionary market oversight powers to the Commission, it is also important to recognize the intended limits of that discretion. The Senate Committee Report sheds particular light on those limits with respect to uniformity of structure: ''This is not to say that it is the goal of the legislation to ignore or eliminate distinctions between exchange markets and over-the-counter markets or other inherent differences or variations in components of a national market system. Some present distinctions may tend to disappear in a national market system, but it is not the intention of the bill to force *all markets for all securities into a single mold.* Therefore, in implementing the bill's objectives, the SEC would have the power to classify markets,

Nevertheless, the Exchange proposes to phase out [9] the LRP functionality for securities as they are covered by the Plan in coordination with the Plan's Phase I and Phase II implementation timelines.[10] LRPs will remain in place for any securities not covered by the Plan.

As such, the Exchange proposes to add rule language that, beginning on April 8, 2013, LRPs will no longer be in effect for Tier 1 NMS Stocks, and on the earlier of August 1, 2013 or such date as Phase II of the Limit Up—Limit Down Plan is implemented, LRPs will no longer be in effect for all NMS Stocks. In order to accommodate the phasing out process, prior to the implementation of Phase II of the Plan, the Exchange will file a separate rule proposal deleting the references to LRP functionality in NYSE Rules 60, 79A, 104, 128, and 1000. The Exchange will apprise members and member organizations of the dates of the discontinuation of the LRP functionality via an Information Memorandum. The Exchange plans to revisit the merits of discontinuing the LRP functionality after the initial Plan pilot period has ended and may file to reincorporate the LRP functionality at that time as well.

2. Statutory Basis

The Exchange believes that the proposed rule change is consistent with the requirements of Section 6(b) of the Act,[11] in general, and Section 6(b)(5) of the Act,[12] in particular, in that it is designed to foster cooperation and coordination with persons engaged in regulating, clearing, settling, processing information with respect to, and facilitating transactions in securities, to remove impediments to and perfect the mechanism for a free and open market and a national market system. However, the Exchange is discontinuing the LRP functionality and deleting corresponding rule references to implement changes that the Commission has requested and expects as reflected in the LULD Release. Moreover, the related Information Memorandum to members and member organizations would provide advance notice to NYSE members and member organizations that the Exchange would cease offering the LRP functionality in furtherance of the Commission's expectations.

B. Self-Regulatory Organization's Statement on Burden on Competition

The Exchange does not believe that the proposed rule change will impose a burden on competition because the Exchange is discontinuing the LRP functionality to fulfill the Commission's expectations. In this respect, the Exchange notes that because Commission expects all exchanges to discontinue their respective volatility mechanisms, there should be no burden on competition because all exchanges as well as their members and issuers would be similarly situated.

C. Self-Regulatory Organization's Statement on Comments on the Proposed Rule Change Received From Members, Participants, or Others

No written comments were solicited or received with respect to the proposed rule change.

III. Date of Effectiveness of the Proposed Rule Change and Timing for Commission Action

The Exchange has filed the proposed rule change pursuant to Section 19(b)(3)(A)(iii) of the Act [13] and Rule 19b–4(f)(6) thereunder.[14] Because the proposed rule change does not: (i) Significantly affect the protection of investors or the public interest; (ii) impose any significant burden on competition; and (iii) become operative prior to 30 days from the date on which it was filed, or such shorter time as the Commission may designate, if consistent with the protection of investors and the public interest, the proposed rule change has become effective pursuant to Section 19(b)(3)(A) of the Act and Rule 19b–4(f)(6)(iii) thereunder.

A proposed rule change filed under Rule 19b–4(f)(6) [15] normally does not become operative prior to 30 days after the date of the filing. However, pursuant to Rule 19b–4(f)(6)(iii),[16] the Commission may designate a shorter time if such action is consistent with the protection of investors and the public interest. The Exchange has asked the Commission to designate an operative date of April 8, 2013. The Commission believes that waiving the operative delay and designating April 8, 2013 as the operative date of the proposed rule change is consistent with the protection of investors and the public interest because such waiver would allow the proposed rule change to be operative on the initial date of Plan operations. Accordingly, the Commission hereby grants the Exchange's request and designates an operative date of April 8, 2013.[17]

At any time within 60 days of the filing of such proposed rule change, the Commission summarily may temporarily suspend such rule change if it appears to the Commission that such action is necessary or appropriate in the public interest, for the protection of investors, or otherwise in furtherance of the purposes of the Act.

IV. Solicitation of Comments

Interested persons are invited to submit written data, views, and arguments concerning the foregoing, including whether the proposed rule change is consistent with the Act. Comments may be submitted by any of the following methods:

Electronic Comments

- Use the Commission's Internet comment form (*http://www.sec.gov/rules/sro.shtml*); or
- Send an email to *rule-comments@sec.gov.* Please include File Number SR–NYSE–2013–27 on the subject line.

Paper Comments

- Send paper comments in triplicate to Elizabeth M. Murphy, Secretary, Securities and Exchange Commission, 100 F Street NE., Washington, DC 20549–1090.

All submissions should refer to File Number SR–NYSE–2013–27. This file number should be included on the subject line if email is used. To help the Commission process and review your comments more efficiently, please use only one method. The Commission will post all comments on the Commission's Internet Web site (*http://www.sec.gov/rules/sro.shtml*). Copies of the submission, all subsequent amendments, all written statements with respect to the proposed rule change that are filed with the

firms, and securities in any manner it deems necessary or appropriate in the public interest or for the protection of investors and *to facilitate the development of subsystems* within the national market system.'' *See id.* at 7 (emphasis added).

[9] The Exchange would note that the suspension, rather than the elimination thereof, of LRPs for the duration of the pilot period would not be put before the Commission for consideration.

[10] *See, e.g.,* Securities Exchange Act Release No. 68785 (January 31, 2013), 78 FR 8646 (February 6, 2013) (SR–NYSEArca–2013–06).

[11] 15 U.S.C. 78f(b).

[12] 15 U.S.C. 78f(b)(5).

[13] 15 U.S.C. 78s(b)(3)(A)(iii).

[14] 17 CFR 240.19b–4(f)(6). In addition, Rule 19b–4(f)(6) requires the Exchange to give the Commission written notice of the Exchange's intent to file the proposed rule change, along with a brief description and text of the proposed rule change, at least five business days prior to the date of filing of the proposed rule change, or such shorter time as designated by the Commission. The Exchange has satisfied this requirement.

[15] 17 CFR 240.19b–4(f)(6).

[16] 17 CFR 240.19b–4(f)(6)(iii).

[17] For purposes only of waiving the operative delay, the Commission has considered the proposed rule's impact on efficiency, competition, and capital formation. *See* 15 U.S.C. 78c(f).

Commission, and all written communications relating to the proposed rule change between the Commission and any person, other than those that may be withheld from the public in accordance with the provisions of 5 U.S.C. 552, will be available for Web site viewing and printing in the Commission's Public Reference Room, 100 F Street NE., Washington, DC 20549, on official business days between the hours of 10:00 a.m. and 3:00 p.m. Copies of such filing also will be available for inspection and copying at the principal office of the Exchange. All comments received will be posted without change; the Commission does not edit personal identifying information from submissions. You should submit only information that you wish to make publicly available. All submissions should refer to File Number SR–NYSE–2013–27 and should be submitted on or before May 1, 2013.

For the Commission, by the Division of Trading and Markets, pursuant to delegated authority.[18]

Kevin M. O'Neill,

Deputy Secretary.

[FR Doc. 2013–08321 Filed 4–9–13; 8:45 am]

BILLING CODE 8011–01–P

[18] 17 CFR 200.30–3(a)(12).

SECURITIES AND EXCHANGE COMMISSION

[Release No. 34–69302; File No. SR–NSCC–2012–10]

Self-Regulatory Organizations; National Securities Clearing Corporation; Order Approving Proposed Rule Change To Eliminate the Offset of Its Obligations With Institutional Delivery Transactions That Settle at The Depository Trust Company for the Purpose of Calculating Its Clearing Fund Under Procedure XV of Its Rules & Procedures

April 4, 2013.

I. Introduction

On December 17, 2012, National Securities Clearing Corporation (''NSCC'') filed with the Securities and Exchange Commission (''Commission'') proposed rule change SR–NSCC–2012–10 (''Proposed Rule Change'') pursuant to Section 19(b)(1) of the Securities Exchange Act of 1934 (''Act'')[1] and Rule 19b–4 thereunder.[2] The Proposed Rule Change was published in the **Federal Register** on January 4, 2013.[3] The Commission extended the period of review of the Proposed Rule Change on February 5, 2013.[4] The Commission received two comment letters to the Proposed Rule Change from one commenter,[5] as well as two responses from NSCC to the comment letters.[6] This order approves the Proposed Rule Change.

II. Description

NSCC filed the Proposed Rule Change to permit it to make rule changes to its Rules and Procedures (''Rules'') designed to eliminate the offset of NSCC obligations with institutional delivery (''ID'') transactions that settle at The Depository Trust Company (''DTC'') for the purpose of calculating the NSCC clearing fund (''Clearing Fund'') under Procedure XV of its Rules, as discussed below.

A. ID Offset

NSCC maintains a Clearing Fund to have on deposit assets sufficient to satisfy losses that may otherwise be incurred by NSCC as the result of the default of an NSCC member (''Member'') and the resulting closeout of that Member's unsettled positions under NSCC's trade guaranty. Each Member is required to contribute to the Clearing Fund pursuant to a formula calculated daily. The Clearing Fund formula accounts for a variety of risk factors through the application of a number of components, including Value-at-Risk (''VaR'')[7] and Market Maker Domination (''MMDOM'').[8]

NSCC currently calculates the VaR and MMDOM components of a Member's Clearing Fund required deposit after allowing for a Member's net unsettled NSCC positions in a particular CUSIP to be offset by any pending ID transactions settling at DTC in the same CUSIP, which have been confirmed and/or affirmed through an institutional delivery system acceptable to NSCC (''ID Offset'').[9] ID Offset is based on the assumption that in the event of a Member's insolvency NSCC will be able to close out any trade for which there is a corresponding ID transaction settling at DTC by completing that ID transaction.[10]

B. Potential Inability To Complete ID Transactions

Generally, when NSCC ceases to act for a Member, it is obligated, for those transactions that it has guaranteed, to pay for deliveries made by non-defaulting Members that are due to the failed Member on the day they are due. If NSCC is unable to complete the ID transactions as contemplated by the current Clearing Fund calculation, then NSCC may need to liquidate a portfolio that could be substantially different than the portfolio for which NSCC collected its Clearing Fund, leaving NSCC potentially under-collateralized and exposed to market risk.

A defaulting Member's pending ID transactions may not be completed for a number of reasons. Completion of an ID transaction by its institutional counterparty is voluntary because that counterparty is not a Member, which means it is not bound by NSCC's Rules and is not party to any legally binding contract with NSCC that requires it or its custodian to complete the transaction. Moreover, based on news that a Member may be in distress or insolvent, the institutional counterparty or its investment adviser may take immediate market action with respect to

[1] 15 U.S.C. 78s(b)(1).

[2] 17 CFR 240.19b–4.

[3] Release No. 34–68549 (Dec. 28, 2012), 78 FR 792 (Jan. 4, 2013). NSCC also filed an advance notice pursuant to Section 806(e)(1) of the Payment, Clearing, and Settlement Supervision Act of 2010 relating to these changes. Release No. 34–68621 (Jan. 10, 2013), 78 FR 3960 (Jan. 17, 2013).

[4] Release No. 34–68829 (Feb. 5, 2013), 78 FR 9751 (Feb. 11, 2013).

[5] Comment Letter from Lek Securities Corporation dated January 25, 2013 (''First Lek Letter'') (*http://sec.gov/comments/sr-nscc-2012-810/nscc2012810-1.pdf*), and Comment Letter from Lek Securities Corporation dated March 18, 2013 (''Second Lek Letter'') (*http://sec.gov/comments/sr-nscc-2012-810/nscc2012810-3.pdf*), (collectively, the ''Lek Letters'').

[6] Response Letter from NSCC dated February 22, 2013 (''First NSCC Response'') (*http://sec.gov/comments/sr-nscc-2012-810/nscc2012810-2.pdf*), and Response Letter from NSCC dated March 21, 2013 (''Second NSCC Response'') (*http://sec.gov/comments/sr-nscc-2012-810/nscc2012810-4.pdf*), (collectively, the ''NSCC Responses'').

[7] The VaR component of the Clearing Fund calculation is a core component of the formula and is designed to calculate the amount of money that may be lost on a portfolio over a given period of time that is assumed necessary to liquidate the portfolio, within a given level of confidence. *See* Release No. 34–68549 (Dec. 28, 2012), 78 FR 792 (Jan. 4, 2013).

[8] The MMDOM component of the Clearing Fund calculation is charged to market makers or firms that clear for them. In calculating the MMDOM, if the sum of the absolute values of net unsettled positions in a security for which the firm in question makes a market is greater than that firm's excess net capital, NSCC may then charge the firm an amount equal to such excess or the sum of each of the absolute values of the affected net unsettled positions, or a combination of both. MMDOM operates to identify concentration within a given CUSIP. *See* Release No. 34–68549 (Dec. 28, 2012), 78 FR 792 (Jan. 4, 2013).

[9] For purposes of the ID Offset, NSCC includes ID transactions that are confirmed and/or affirmed on trade date, as well as ID transactions affirmed one day after trade date and remain affirmed through settlement date. *See* Release No. 34–68549 (Dec. 28, 2012), 78 FR 792 (Jan. 4, 2013).

[10] ID transactions are included in the ID Offset only if they are on the opposite side of the market from the Member's net NSCC position (i.e., only if they reduce the net position). *See* Release No. 34–68549 (Dec. 28, 2012), 78 FR 792 (Jan. 4, 2013).

the ID transaction, in order to reduce its market risk, which effectively eliminates the option for NSCC to complete the transactions. Finally, ID transactions settle trade-by-trade between the executing broker and the custodian; the netted ID positions used to offset the NSCC position could be comprised of thousands of individual trades with hundreds of different counterparties. In the event of a Member default, it could be time consuming for NSCC to contact the counterparties individually to get their agreement to complete the ID transactions. Even if NSCC were to get all of the counterparties to agree to complete the ID transactions, this could delay the prompt closeout of the defaulter's open positions and possibly expose NSCC to additional market risk in excess of the Clearing Fund.

Due to the risk that, in the event it ceases to act for a Member with pending ID transactions, NSCC may be unable to complete the pending ID transactions in the timeframe contemplated by its current Clearing Fund calculations and, as a result, may have insufficient margin in its Clearing Fund, as described above, NSCC will eliminate the ID Offset calculation from the VaR and MMDOM components of a Member's Clearing Fund requirement deposit.

C. Implementation Schedule

In order to mitigate the impact of this rule change on its Members, NSCC will implement the changes set forth in the Proposed Rule Change over an 18-month period. On a date no earlier than 10 days following notice to Members by Important Notice (''Initial Implementation Date''), NSCC will eliminate ID Offset from ID transactions that have only been confirmed, but have not yet been affirmed. Beginning on a date approximately 12 months from the Initial Implementation Date, and no earlier than 10 days following notice to Members by Important Notice, NSCC will eliminate from ID Offset all affirmed ID transactions that have reached settlement date at the time the Clearing Fund calculations are run. Three months later, or approximately 15 months following the Initial Implementation Date, and on a date no earlier than 10 days following notice to Members by Important Notice, NSCC will eliminate from ID Offset all affirmed ID transactions that have reached either settlement date or the day prior to settlement date. Finally, on a date approximately 18 months following the Initial Implementation Date, and no earlier than 10 days following notice to Members by Important Notice, NSCC will eliminate ID Offset entirely for all ID transactions. Members will be advised of each proposed implementation date through issuance of NSCC Important Notices, which are publicly available at *www.dtcc.com.*

III. Comments

The Commission received two comment letters to the Proposed Rule Change from a single commenter,[11] and two responses from NSCC to the comment letters.[12]

The commenter's arguments opposing NSCC's proposal generally fall into two categories: (1) Those that challenge a premise for, or the decision-making process with respect to, the Proposed Rule Change; and (2) those that identify potential ramifications of the Proposed Rule Change.[13] Each of the arguments, as well as NSCC's responses, are discussed in more detail below.

The commenter argues that it is a reasonable assumption that most ID transactions will be completed because institutional customers are reliable and creditworthy, so NSCC should not assume for purposes of the Proposed Rule Change that all ID transactions will not be completed.[14]

NSCC responded that there is no guarantee that any pending ID transaction will be completed because there is no privity of contract between NSCC and the non-member institutional counterparties to the ID transactions,[15] which the commenter conceded.[16] Therefore, notwithstanding institutional customers' past practices, NSCC argues that there is no contractual obligation with NSCC that ID transactions be completed; as a result, the assumption that NSCC will be able to close out defaulting member trades for which there is a corresponding ID transaction that will settle at DTC is wrong.[17]

The commenter claims that NSCC currently collects sufficient margin, as NSCC has never had to use the Clearing Fund deposits of a non-defaulting Member, nor has it ever suffered a loss due to insufficient margin.[18] Because NSCC's current margin requirements are adequately calculated, the ID Offset should remain.[19]

In response, NSCC stated, and to which the commenter agreed,[20] that past events may not be adequate indicators of future risks when calculating its margin requirements, particularly in light of recent financial market disruptions, changing trading patterns, and new trading technologies.[21] Additionally, by allowing the ID Offset, NSCC maintains that its current Clearing Fund calculation fails to account for the risk that NSCC will not be able to settle pending ID trades, and that therefore the calculation should be adjusted to eliminate this known risk, irrespective of whether the current margin has been sufficient.[22]

The commenter argues that agency broker-dealers are less risky than Members engaged in proprietary trading for a number of reasons, including that agency broker-dealers do not trade on margin, cannot assume short positions, and cannot write options.[23] As a result, the commenter argues that agency broker-dealers should not be required to meet the same margin requirements as Members engaged in proprietary trading.[24]

NSCC responds that agency broker-dealer firms, along with other firms, are trading in greater volume and frequency and are employing riskier trading techniques, like high frequency trading, than they have historically.[25] As a result, NSCC believes that all firms, including agency broker-dealers, present a greater risk of failure now than they have historically.[26]

[11] *See* Lek Letters, *supra* note 5.

[12] *See* NSCC Responses, *supra* note 6.

[13] *See* Lek Letters, *supra* note 5. The First Lek Letter also argued that broker-dealers should be permitted to use customer funds to meet margin requirements derived from customer positions. *See* First Lek Letter, *supra* note 5. Because that argument addresses a Commission requirement and not an NSCC requirement, it is outside the scope of this Proposed Rule Change.

[14] *See* First Lek Letter, *supra* note 5.

[15] *See* NSCC Responses, *supra* note 6; *see also* Release No. 34–68549 (Dec. 28, 2012), 78 FR 792 (Jan. 4, 2013).

[16] *See* Second Lek Letter, *supra* note 5 (''NSCC is however correct that there is lack of privity of contract between NSCC and the institutional counterparty, and that if left unaddressed NSCC would not be able to complete the pending ID transactions. We applaud NSCC for identifying this concern.''); *see also* First Lek Letter, *supra* note 5 (''We do concede that one, or maybe even two, of an agency broker's customers might reneg [sic] on their losing trades * * * and as a result the broker would be stuck with the trades and lose money covering them.'').

[17] *See* NSCC Responses, *supra* note 6; *see also* Release No. 34–68549 (Dec. 28, 2012), 78 FR 792 (Jan. 4, 2013).

[18] *See* First Lek Letter, *supra* note 5.

[19] *Id.*

[20] *See* Second Lek Letter, *supra* note 5 (''We * * * agree that NSCC should not necessarily rely on past events as indicators of future risks and that high frequency trading and computerized algorithms have introduced additional risk into the market.'').

[21] *See* First NSCC Response, *supra* note 6.

[22] *Id.*

[23] *See* First Lek Letter, *supra* note 5.

[24] *Id.*

[25] *See* First NSCC Response, *supra* note 6. NSCC noted that a technology-related trading disruption that occurred in August 2012 was generated by an agency broker-dealer. *Id.*

[26] *Id.*

Citing the requirement in Section 17A(b)(3)(C) of the Act that the rules of a registered clearing agency should assure a fair representation of its members and participants in the selection of its directors and administration of its affairs, the commenter suggests that the Depository Trust and Clearing Corporation (''DTCC'') [27] Board may not fairly represent NSCC's independent, agency broker-dealer Members, given that there is not one representative on the board from a traditional, non-bank affiliated brokerage firm; although, the commenter notes that it is not suggesting that the DTCC Board's composition is a direct violation of 17A(b)(3)(C) of the Act.[28] As discussed below, NSCC has noted that it took various steps to discuss the proposal with its Members and seek input from Members.

The commenter argues that the proposal has a disparate, negative impact on agency broker-dealers not only because such firms are less risky and, therefore, should not require as much margin, as discussed above, but also because the elimination of the ID Offset will likely increase Clearing Fund margin requirements, increases that independent broker-dealers (i.e., non-bank affiliated firms) may be unable to meet due to funding restraints, which may force such broker-dealers out of business, possibly reducing competition in the industry. The commenter has also stated that the proposal may have a negative impact on customers of such broker-dealers.[29]

NSCC responded that the elimination of the ID Offset is equally applied to its Members, and that the ID Offset provides an unfair and disproportionate advantage currently enjoyed by Members who have ID transactions to offset; therefore, the proposal actually ''levels the playing field,'' with respect to calculating the margin collected for the Clearing Fund.[30] Additionally, NSCC acknowledges that the proposal to eliminate ID Offsets will likely increase the Clearing Fund requirements of certain Members.[31] However, to mitigate that effect, NSCC explains that it performed an impact study of the proposal, shared the results of the study with impacted Members, and provided opportunities for those Members to discuss, prepare for, and further mitigate the impact, most specifically through a working group that, ultimately, developed an 18-month implementation timeframe, as outlined in the notice of the Proposed Rule Change.[32] NSCC has also noted that NSCC Relationship Management and Enterprise Risk Management staff met with Members that would have experienced a change to their clearing fund requirement of greater than 25%, and other impacted Members were invited to contact their NSCC Relationship Managers to schedule meetings with HSCC staff. Furthermore, NSCC notes that Members who are unable to meet its Clearing Fund requirements are not necessarily forced out of business; rather, such firms could choose to clear their transactions through Members who continue to meet the requirements, as some agency broker-dealers currently do.[33] Finally, NSCC argues that given the important risk mitigating benefits of eliminating the ID Offset, NSCC believes the possible, unintended impact on competition should not be considered unreasonable or inappropriate. NSCC also has stated that the rule change will improve the safety and soundness of the U.S. capital markets, generally.[34]

The commenter states that a viable alternative to the proposal to eliminate the ID Offset exists, in that NSCC could serve as a central counterparty (''CCP'') for ID transactions (''CCP Alternative''),[35] as it does for other transactions.[36] According to the commenter, this would alleviate NSCC's concern that it may not be able to close out defaulting member trades for which there is a corresponding ID transaction that will settle at DTC with the corresponding ID transaction.[37] Furthermore, the commenter claims that NSCC staff believes that the CCP Alternative is viable and would satisfy NSCC concerns with regard to ID Offsets, but it is not supported by NSCC's senior management, who may have ulterior motives in seeing ID Offsets eliminated.[38]

NSCC counters, generally, that alternatives to the proposal were explored, particularly through the working group mentioned above, but no viable options exist.[39] More specifically, NSCC argues that the CCP Alternative is not practical because the institutional counterparties to ID trades are not NSCC members, and thus NSCC would have to voluntarily guarantee uncollateralized ID trades without collecting margin to insulate NSCC from a default of a counterparty, which would not resolve the market risk that ID Offsets present and NSCC seeks to eliminate with its proposal.[40] Additionally, even if the CCP Alternative were to eliminate the ID Offset market risk, NSCC claims that implementing the CCP Alternative would require a significant change to the current securities market structure.[41] Finally, NSCC asserts that the CCP Alternative is not viable.[42]

IV. Discussion

In its assessment of the Proposed Rule Change for consistency with the Act, the Commission carefully considered the comments and responses it received and the information provided in the Proposed Rule Change itself. After an extended review, the Commission finds that the Proposed Rule Change is consistent with the requirements of the Act and the applicable rules and regulations thereunder, as discussed below.[43]

Section 17A(b)(3)(F) of the Act requires that, among other things, ''[t]he rules of the clearing agency are designed to promote the prompt and accurate clearance and settlement of securities transactions and * * * to assure the safeguarding of securities and funds which are in the custody or control of the clearing agency or for which it is responsible.'' [44]

As a CCP, NSCC occupies an important role in the securities settlement system by interposing itself between counterparties to financial transactions, thereby reducing certain risks faced by Members and contributing to global financial stability. In this role, however, NSCC is

[27] NSCC is a wholly owned subsidiary of DTCC. About DTCC: NSCC, *http://dtcc.com/about/subs/nscc.php* (last visited Apr. 2, 2013).

[28] *See* First Lek Letter, *supra* note 5 (''[W]e are not suggesting that the Board's current makeup directly violates [Section 17A(b)(3)(C) of the Exchange Act] * * *.''); *see also* 15 U.S.C. 78q–1(b)(3)(C).

[29] *See* Lek Letters, *supra* note 5.

[30] *See* First NSCC Response, *supra* note 6.

[31] *See* NSCC Responses, *supra* note 6.

[32] *See* First NSCC Response, *supra* note 6; *see also* Release No. 34–68549 (Dec. 28, 2012), 78 FR 792 (Jan. 4, 2013).

[33] *See* First NSCC Response, *supra* note 6.

[34] *See* First NSCC Response, *supra* note 6.

[35] *See* Second Lek Letter, *supra* note 5.

[36] Among other things, NSCC provides CCP services and guarantees completion for certain transactions, but not ID transactions. *See* About DTCC: NSCC, *supra* note 27.

[37] *See* Lek Letters, *supra* note 5.

[38] *See* Second Lek Letter, *supra* note 5.

[39] *See* First NSCC Response, *supra* note 6.

[40] *See* Second NSCC Response, *supra* note 6 (''The [CCP Alternative] would require the buy-side of the market to contractually agree to settle its transactions at NSCC, whereby NSCC would essentially provide a central counterparty guarantee to the buy-side of those trades on an uncollateralized basis, without collecting margin that would protect it and its membership from the default of those buy-side parties.'').

[41] *Id.*

[42] *Id.*

[43] In approving the Proposed Rule Change, the Commission considered the proposal's impact on efficiency, competition, and capital formation. 15 U.S.C. 78c(f).

[44] 15 U.S.C. 78q–1(b)(3)(F).

necessarily subject to certain risks in the event of the default of a Member.

Here, NSCC's proposal to eliminate the ID Offset, as described above, is designed to help mitigate the risk that NSCC will be under-collateralized if it ceases to act for a defaulting Member and is unable to complete the offsetting ID transactions in the time currently contemplated by its Clearing Fund calculation. As such, the Commission believes that NSCC's proposal to eliminate ID Offsets should help further promote the prompt and accurate clearance and settlement of securities transactions, and assure the safeguarding of securities and funds for which NSCC is responsible.

Furthermore, Commission Rule 17Ad–22(b)(1) regarding measurement and management of credit exposure,[45] adopted as part of the Clearing Agency Standards,[46] requires a CCP to establish, implement, maintain and enforce written policies and procedures reasonably designed to measure its credit exposures to its participants at least once a day and limit its exposures to potential losses from defaults by its participants under normal market conditions so that the operations of the CCP would not be disrupted and non-defaulting participants would not be exposed to losses that they cannot anticipate or control.[47]

Here, as described in detail above, NSCC's proposal to eliminate ID Offsets should help to limit its exposure, as well as non-defaulting members' exposure, to potential losses from a defaulting Member, while minimizing disruption to its CCP operations, by more accurately reflecting its risks in the calculation of its Clearing Fund margin. As discussed above, NSCC's calculation of its Clearing Fund margin will be more accurate in that it will not include an assumption of trade closeouts following a Member insolvency with respect to trades for which there is a corresponding ID transaction.

Finally, Commission Rules 17Ad–22(d)(4) regarding identification and mitigation of operational risk,[48] and 17Ad–22(d)(11) regarding default procedures,[49] also both adopted as part of the Clearing Agency Standards,[50] require that registered clearing agencies ''establish, implement, maintain and enforce written policies and procedures reasonably designed to, as applicable: * * * Identify sources of operational risk and minimize them through the development of appropriate systems, controls, and procedures * * * '',[51] and '' * * * establish default procedures that ensure that the clearing agency can take timely action to contain losses and liquidity pressures and to continue meeting its obligations in the event of a participant default,'' [52] respectively.

Here, as described in detail above, the elimination of ID Offsets should help NSCC better minimize settlement risks and better ensure that it can contain losses and liquidity pressures, and meet its obligations in a timely fashion, by more accurately accounting for those risks in its Clearing Fund calculation that is designed to satisfy potential losses in a timely manner.

After specifically considering each of the commenter's claims, as discussed below, the Commission maintains its belief that the Proposed Rule Change is consistent with the requirements of the Act and the applicable rules and regulations thereunder, as discussed above.

The Commission understands that institutional counterparties to ID transactions are not NSCC members and, therefore, maintain no privity of contract with NSCC regarding ID trades.[53] Since there is no contractual obligation with NSCC that ID transactions be completed, the assumption that NSCC may not be able to close out defaulting member trades for which there is a corresponding ID transaction that will settle at DTC is correct.

Given the risk that NSCC may not be able to settle ID trades, as discussed above, NSCC may be collecting insufficient margin, regardless of past needs, potentially leaving it under-collateralized if a Member defaults. The Commission believes that the Proposed Rule Change furthers NSCC's compliance with the requirements of Section 17A(b)(3)(F)[54] of the Act, as well as Rules 17Ad–22(b)(1),[55] 17Ad–22(d)(4),[56] and 17Ad–22(d)(11),[57] as described above.

The Commission believes that agency broker-dealer firms are not riskless and those Members could present serious risks to NSCC, as demonstrated by the significant market events involving an NSCC Member in August 2012, which both NSCC and the commenter acknowledge.[58] Therefore, as noted above, the Commission believes that the elimination of the ID Offset, which would mitigate a known risk, as discussed above, furthers NSCC's compliance with Section 17A(b)(3)(F) of the Act,[59] as well as Rules 17Ad–22(b)(1),[60] 17Ad–22(d)(4),[61] and 17Ad–22(d)(11),[62] as discussed above.

Though the commenter did not suggest that DTCC Board's composition is a direct violation of 17A(b)(3)(C) of the Act,[63] the Commission notes that fair representation can be achieved through multiple channels, including exposing Members to proposed rule changes in order for Members to have an opportunity to express their particular needs or concerns.[64] Here, before filing the proposal with the Commission, where the proposal became available for public comment,[65] NSCC: notified its Members of its intent to file; completed a study on the proposal's impact; provided impacted Members with direct feedback; convened a working group of impacted Members to address ways of mitigating the proposals impact; and incorporated an 18-month implementation schedule into the proposal—a direct result of the working group.[66] The Commission believes that in the circumstances of the Proposed Rule Change, these processes have provided NSCC Members adequate opportunity to fairly represent themselves in the development of the proposal.

By eliminating the ID Offset, which the Commission believes applies universally to all Members and which would be consistent with Section 17A(b)(3)(F) of the Act,[67] as well as Rules 17Ad–22(b)(1),[68] 17Ad–22(d)(4),[69] and 17Ad–22(d)(11),[70] as discussed above, there could be a resulting increase in NSCC's Clearing Fund requirement, as both NSCC and the

[45] 17 CFR 240.17Ad–22(b)(1).

[46] Release No. 34–68080 (Oct. 22, 2012), 77 FR 66219 (Nov. 2, 2012).

[47] 17 CFR 240.17Ad–22(b)(1).

[48] 17 CFR 240.17Ad–22(d)(4).

[49] 17 CFR 240.17Ad–22(d)(11).

[50] Release No. 34–68080 (Oct. 22, 2012), 77 FR 66219 (Nov. 2, 2012).

[51] 17 CFR 240.17Ad–22(d)(4).

[52] 17 CFR 240.17Ad–22(d)(11).

[53] *See* NSCC Responses, *supra* note 6, and *see* Second Lek Letter, *supra* note 5.

[54] 15 U.S.C. 78q–1(b)(3)(F).

[55] 17 CFR 240.17Ad–22(b)(1).

[56] 17 CFR 240.17Ad–22(d)(4).

[57] 17 CFR 240.17Ad–22(d)(11).

[58] *See* First NSCC Response, *supra* note 6, and *see* Second Lek Letter, *supra* note 5.

[59] 15 U.S.C. 78q–1(b)(3)(F).

[60] 17 CFR 240.17Ad–22(b)(1).

[61] 17 CFR 240.17Ad–22(d)(4).

[62] 17 CFR 240.17Ad–22(d)(11).

[63] *See* First Lek Letter, *supra* note 5 (''[W]e are not suggesting that the Board's current makeup directly violations [Section 17A(b)(3)(C) of the Exchange Act] * * * .''), and *see* 15 U.S.C. 78q–1(b)(3)(C).

[64] *See* Release No. 34–16900 (June 17, 1980), 45 FR 41920 (June 23, 1980).

[65] Release No. 34–68549 (Dec. 28, 2012), 78 FR 792 (Jan. 4, 2013).

[66] *See* NSCC Reponses, *supra* note 6.

[67] 15 U.S.C. 78q–1(b)(3)(F).

[68] 17 CFR 240.17Ad–22(b)(1).

[69] 17 CFR 240.17Ad–22(d)(4).

[70] 17 CFR 240.17Ad–22(d)(11).

commenter acknowledge,[71] which may have a detrimental impact on certain Members and possibly competition overall. However, the Commission believes NSCC has taken adequate steps to engage Members impacted by the increase and mitigate the effect of the increase, as demonstrated by the impact studies and the working group that NSCC convened that resulted in the 18-month implementation scheduled.[72] Additionally, the Commission believes that while there could be a redistribution of business for agency broker-dealers,[73] agency broker-dealers impacted by the Proposed Rule Change could seek alternative arrangements, such as moving the applicable portion of the impacted business to or through a continuing Member, as NSCC suggests and as is currently done by some firms.[74] The Commission also acknowledges that while the proposal may have an effect on customers, a more accurate reflection of risks in the calculation of Clearing Fund margin, however, could benefit customers through reducing risks to NSCC.

NSCC has not proposed the CCP Alternative discussed above as a proposed rule change, and thus the CCP Alternative is outside the scope of this Proposed Rule Change. Nonetheless, in considering the consistency of the Proposed Rule Change with the requirements of the Act and the applicable rules and regulations thereunder, the Commission acknowledges that the CCP Alternative does not appear practical for NSCC at the current time because, as NSCC has pointed out, the institutional counterparties to ID trades are not NSCC members, and thus, absent new membership for these counterparties, NSCC would have to voluntarily guarantee uncollateralized ID trades without collecting margin to insulate NSCC from a default of a counterparty, which would not resolve the market risk that ID Offsets present and NSCC seeks to eliminate through the Proposed Rule Change. Furthermore, even if the CCP Alternative did resolve the market risk that the Proposed Rule Change is intended to address, the CCP Alternative does not appear to be an immediately viable option for NSCC, as it would likely require potentially complicated changes to the current clearance and settlement structure.[75]

V. Conclusion

On the basis of the foregoing, the Commission finds the Proposed Rule Change consistent with the requirements of the Act, particularly with the requirements of Section 17A of the Act,[76] and the rules and regulations thereunder.

It is therefore ordered, pursuant to Section 19(b)(2) of the Act,[77] that the proposed rule change SR–NSCC–2012–10 be and hereby is APPROVED as of the date of this order or the date of the ''Notice of Filing No Objection to Advance Notice Filing to Eliminate the Offset of [NSCC's] Obligations with Institutional Delivery Transactions that Settle at The Depository Trust Company for the Purpose of Calculating Its Clearing Fund Under Procedure XV of Its Rules & Procedures'' (File No. SR–NSCC–2012–810),[78] whichever is later.

For the Commission by the Division of Trading and Markets, pursuant to delegated authority.[79]

Kevin M. O'Neill,

Deputy Secretary.

[FR Doc. 2013–08307 Filed 4–9–13; 8:45 am]

BILLING CODE 8011–01–P

[71] *See* First Lek Letter, *supra* note 5, and *see* NSCC Responses, *supra* note 6.

[72] *See* NSCC Responses, *supra* note 6.

[73] *See* Lek Letters, *supra* note 5.

[74] *See* First NSCC response, *supra* note 6. The Commission notes that it did not receive comments from any other firms potentially impacted by the Proposed Rule Change.

[75] *See* Second NSCC Response, *supra* note 6.

[76] 15 U.S.C. 78q–1.

[77] 15 U.S.C. 78s(b)(2).

[78] Release No. 34–69301

[79] 17 CFR 200.30–3(a)(12).

SECURITIES AND EXCHANGE COMMISSION

[Release No. 34–69298; File No. SR–NYSE–2013–24]

Self-Regulatory Organizations; New York Stock Exchange LLC; Notice of Filing and Immediate Effectiveness of Proposed Rule Change To Establish Certain Fees for the NYSE Trades and NYSE Realtime Reference Prices Market Data Products

April 4, 2013.

Pursuant to Section 19(b)(1) [1] of the Securities Exchange Act of 1934 (the ''Act'') [2] and Rule 19b–4 thereunder,[3] notice is hereby given that, on March 21, 2013, New York Stock Exchange LLC (''NYSE'' or the ''Exchange'') filed with the Securities and Exchange Commission (the ''Commission'') the proposed rule change as described in Items I, II, and III below, which Items have been prepared by the self-regulatory organization. The Commission is publishing this notice to solicit comments on the proposed rule change from interested persons.

I. Self-Regulatory Organization's Statement of the Terms of Substance of the Proposed Rule Change

The Exchange proposes to establish certain fees for the NYSE Trades and NYSE Realtime Reference Prices (''NYSE RRP'') market data products. The text of the proposed rule change is available on the Exchange's Web site at *www.nyse.com,* at the principal office of the Exchange, and at the Commission's Public Reference Room.

II. Self-Regulatory Organization's Statement of the Purpose of, and Statutory Basis for, the Proposed Rule Change

In its filing with the Commission, the self-regulatory organization included statements concerning the purpose of, and basis for, the proposed rule change and discussed any comments it received on the proposed rule change. The text of those statements may be examined at the places specified in Item IV below. The Exchange has prepared summaries, set forth in sections A, B, and C below, of the most significant parts of such statements.

A. Self-Regulatory Organization's Statement of the Purpose of, and Statutory Basis for, the Proposed Rule Change

1. Purpose

The Exchange proposes to establish certain fees for the NYSE Trades and NYSE RRP market data products.

Background

Current NYSE Trades Basic and Broadcast Fees

In 2009, the Securities and Exchange Commission (''SEC'' or the ''Commission'') approved the NYSE Trades data feed and certain fees for it.[4] NYSE Trades is a NYSE-only market data feed that allows a vendor to redistribute on a real-time basis the same last sale information that the Exchange reports under the Consolidated Tape Association (''CTA'') Plan for inclusion in the CTA Plan's consolidated data streams and certain other related data elements. Specifically, NYSE Trades includes the real-time last sale price, time, size, and bid/ask quotations for each security traded on the Exchange and a stock summary message. The stock summary message updates every minute and

[1] 15 U.S.C. 78s(b)(1).

[2] 15 U.S.C. 78a.

[3] 17 CFR 240.19b–4.

[4] *See* Securities Exchange Act Release No. 59606 (Mar. 19, 2009), 74 FR 13293 (Mar. 26, 2009) (SR–NYSE–2009–04).

includes NYSE's opening price, high price, low price, closing price, and cumulative volume for the security.

The Exchange currently charges NYSE Trades data feed recipients an access fee of $1,500 per month, and a subscriber fee for professional subscribers of $15 per month per device, which may be counted, at the election of the vendor based on the number of ''Subscriber Entitlements'' [5] (collectively, these fees are referred to in this filing as ''NYSE Trades basic fees''). In July 2012, the Exchange added a fee for distribution by television broadcasters (''Broadcast Fee''), which is $40,000 per month.[6] The television broadcast distribution method differs from the other distribution methods in that the data is available in a temporary, view-only mode on television screens.

Current NYSE RRP Fees

The Exchange also offers NYSE RRP.[7] NYSE RRP is designed for Web site distribution and includes the real-time last sale price and time for each security traded on the Exchange as well as the stock summary message, but does not include the size of each trade or bid/ask quotations.

The Exchange currently charges a flat fee of $60,000 per month with no user-based fees for NYSE RRP. For that fee, the vendor may provide NYSE RRP to an unlimited number of the vendor's subscribers and customers without having to differentiate between professional subscribers and nonprofessional subscribers, without having to account for the extent of access to the data, and without having to report the number of users. As an alternative to the NYSE RRP flat monthly fee, the Exchange offers an alternative fee of $.004 for each real-time reference price that a vendor disseminates to its customers (''per query fee''), which is capped at $60,000 per month, the same amount as the flat fee. In order to take advantage of the per-query fee, a vendor must document that it has the ability to measure accurately the number of queries and must have the ability to report aggregate query quantities on a monthly basis. The per-query fee is imposed on vendors, not end-users. There are currently no fees for NYSE RRP that are specifically designed for television or mobile device distribution.

NYSE RRP was created to allow distribution of a last sale data product for reference purposes on Web sites at a low cost that would facilitate distribution to millions of retail investors and relieve vendors of administrative burdens.[8] NYSE RRP is an alternative to delayed prices and is not intended for use in trading decisions.[9] As such, distribution of NYSE RRP is subject to certain requirements. Specifically, vendors may not provide NYSE RRP in a context in which a trading or order routing decision can be implemented unless CTA data is available in an equivalent manner, must label NYSE RRP as NYSE-only data, and must provide a hyperlinked notice similar to the one provided for CTA delayed data.[10]

New Digital Media Offerings

The Exchange recently created a new version of NYSE Trades, NYSE Trades Digital Media, which will allow market data vendors, television broadcasters, Web site and mobile device service providers, and others to distribute the product to their customers for viewing via television, Web site, and mobile devices.[11] The NYSE Trades Digital Media product includes access to the real-time last sale price, time, and size for each security traded on the Exchange as well as the stock summary message, but does not include access to the bid/ask quotation that is included with NYSE Trades product under the basic fees or Broadcast Fee. Vendors may not provide the NYSE Trades Digital Media product in a context in which a trading or order routing decision can be implemented unless CTA data is available in an equivalent manner, must label the product as NYSE-only data, and must provide a hyperlinked notice similar to the one provided for CTA delayed data.

The Exchange also will offer NYSE RRP Digital Media so that NYSE RRP will be available for distribution in the same manner as NYSE Trades Digital Media, via television, Web site, and mobile devices. The data elements of NYSE RRP (last sale price, time, and stock summary message) will remain unchanged from today's NYSE RRP product offering.

The Exchange has established these Digital Media products in recognition of the demand for a more seamless and easier-to-administer data distribution model that takes into account the expanded variety of media and communication devices that investors utilize today. For example, a television broadcaster could display the NYSE Trades data during market-related television programming and on its Web site and allow its viewers to view the data via their mobile devices, creating a more seamless distribution model that will allow investors more choice in how they receive and view market data.

Proposed Digital Media Fees

The NYSE Trades Digital Media Enterprise Fee will be $40,000 per month, and the NYSE RRP Digital Media Enterprise Fee will be $25,000 per month. The Exchange notes that the NYSE RRP Digital Media Enterprise Fee is lower than NYSE Trades Digital Media Enterprise Fee because it does not include trade size data. Vendors that pay these fees will not be required to pay an access fee, but they will be required to pay the redistribution fees as described below. As with the current NYSE RRP product and the Broadcast Fee, a vendor paying the Digital Media Enterprise Fee may deliver the NYSE Trades and NYSE RRP data to an unlimited number of television, Web site, and mobile device viewers without having to differentiate between professional subscribers and nonprofessional subscribers, without having to account for the extent of access to the data, and without having to report the number of users.

For NYSE Trades, the television-only $40,000 Broadcast Fee option will no longer be available. For NYSE RRP, web-only distribution for $60,000 per month will no longer be available. The Exchange does not believe that any customers would elect these options in light of the broader distribution offered with the new Digital Media Enterprise Fees and the substantially lower price for NYSE RRP Digital Media.

The Exchange will continue to offer the $.004 per query fee for NYSE RRP to any vendor that so chooses, but the Exchange proposes to reduce the cap to $25,000, the same amount as the NYSE RRP Digital Media Enterprise Fee. Vendors and subscribers receiving NYSE Trades via traditional distribution methods, e.g. a Bloomberg terminal or a broker-dealer customer Web site that permits order entry, will not be eligible for Digital Media Enterprise Fees and

[5] *See id.* at n.5; Securities Exchange Act Release No. 62038 (May 5, 2010), 75 FR 26825 (May 12, 2010) (SR–NYSE–2010–22).

[6] *See* Securities Exchange Act Release No. 67467 (July 19, 2012), 77 FR 43636 (July 25, 2012) (SR–NYSE–2012–28).

[7] *See* Securities Exchange Act Release No. 61406 (Jan. 22, 2010), 75 FR 4600 (Jan. 28, 2010) (SR–NYSE–2009–120).

[8] *See* Securities Exchange Act Release No. 55354 (Feb. 26, 2007), 72 FR 9817 (Mar. 5, 2007) (SR–NYSE–2007–04) (proposing NYSE RRP pilot).

[9] *See* Securities Exchange Act Release No. 60004 (May 29, 2009), 74 FR 26905 (June 4, 2009) (SR–NYSE–2009–42) (making NYSE RRP pilot permanent) (''NYSE RRP Permanent Approval Order'').

[10] *Id.*

[11] *See* SR–NYSE–2013–23.

will continue to pay NYSE Trades basic fees.

Redistribution Fees

The Exchange also proposes to charge a redistribution fee of $1,000 per month for NYSE Trades and $1,500 per month for NYSE RRP.[12] The redistribution fees will apply regardless of whether the customer is eligible for the Digital Media Enterprise Fees or NYSE Trades basic fees.

Operative Date

The Digital Media Enterprise Fees will be operative on April 1, 2013 and the redistribution fees will be operative on May 1, 2013.

2. Statutory Basis

The Exchange believes that the proposed rule change is consistent with the provisions of Section 6 of the Act,[13] in general, and Sections 6(b)(4) and 6(b)(5) of the Act,[14] in particular, in that it provides an equitable allocation of reasonable fees among users and recipients of the data and is not designed to permit unfair discrimination among customers, issuers, and brokers.

The proposed NYSE Trades Digital Media Enterprise Fee of $40,000 per month and NYSE RRP Digital Media Enterprise Fee of $25,000 per month are reasonable because they will offer a means for vendors to more widely distribute NYSE Trades and NYSE RRP data to investors for informational purposes at the same cost (in the case of NYSE Trades) or a lower cost (in the case of NYSE RRP) than is available today. Currently, NYSE Trades can be distributed via television for a $40,000 monthly fee, but that fee does not include Web site or mobile device distribution. NYSE RRP can be distributed over Web sites for a $60,000 monthly fee, but that fee does not include television or mobile device distribution. The Exchange believes that the proposed Digital Media Enterprise Fees are reasonable because in certain instances they are less than the fees charged by another exchange for a similar product.[15] The Exchange also believes that it is reasonable to charge more for NYSE Trades Digital Media than NYSE RRP Digital Media because the former includes trade size data. The Exchange believes that the price reduction for NYSE RRP coupled with the broader distribution options will make the product more attractive and result in its greater availability to investors. The Exchange believes that reducing the cap for the per query fee from $60,000 to $25,000 is reasonable because it will be equal to the proposed monthly NYSE RRP Digital Media Enterprise Fee. The Exchange believes that reducing the cap for the per query fee is equitable and not unfairly discriminatory because it is designed to ensure that vendors that elect the per query fee do not pay more for real-time reference price data than vendors that pay a flat fee for unlimited use.

The proposed Digital Media Enterprise Fees also are equitable and not unfairly discriminatory because they will be applied uniformly to market data vendors, television broadcasters, Web site and mobile service providers, or any other person that distributes the data on the basis described in this filing. The Exchange believes that it is appropriate to offer a lower cost fee structure that is designed to facilitate broader media distribution of the NYSE Trades and NYSE RRP data for informational purposes because it will benefit investors generally. Moreover, the value of the data distributed generally in the media for informational purposes differs from when it is distributed in manner in which it can immediately be utilized for trading decisions. The Exchange believes that the data is more valuable in that latter context, and as such, it is fair and equitable to have differential pricing for it.

In establishing the Digital Media Enterprise Fees, the Exchange recognizes that there is demand for a more seamless and easier-to-administer data distribution model that takes into account the expanded variety of media and communication devices that investors utilize today. As is the case with the current NYSE RRP product and the Broadcast Fee, the Exchange believes that the Digital Media Enterprise Fee will be easy to administer because vendors that purchase it will not have to differentiate between professional subscribers and nonprofessional subscribers, account for the extent of access to the data, or report the number of users; this is a significant reduction in vendors' administrative burdens and is a significant value to vendors. For example, a television broadcaster could display the NYSE Trades Digital Media data during market-related television programming and on its Web site and allow its viewers to view the data via their mobile devices, creating a more seamless distribution model that will allow investors more choice in how they receive and view market data, all without having to account for and/or measure who accesses the data and how much they do so. By easing administration, broadening distribution channels, and, in the case of NYSE RRP, reducing prices, the Exchange believes that more vendors will choose to offer NYSE Trades and NYSE RRP, thereby expanding the distribution of market data for the benefit of investors.

The proposed redistribution fees also are reasonable because they are comparable to other redistribution fees charged by other exchanges.[16] The Exchange believes it is reasonable to charge redistribution fees because vendors receive value from redistributing the data in their business products for their customers. The redistribution fees also are equitable and not unfairly discriminatory because they will be charged on an equal basis only to those vendors that choose to redistribute the data.

The decision of the United States Court of Appeals for the District of Columbia Circuit in *NetCoalition* v. *SEC,* 615 F.3d 525 (D.C. Cir. 2010), upheld the Commission's reliance upon the existence of competitive market mechanisms to set reasonable and equitably allocated fees for proprietary market data.

In fact, the legislative history indicates that the Congress intended that the market system 'evolve through the interplay of competitive forces as unnecessary regulatory restrictions are removed' and that the SEC wield its regulatory power 'in those situations where competition may not be sufficient,' such as in the creation of a 'consolidated transactional reporting system.'

Id. at 535 (quoting H.R. Rep. No. 94–229 at 92 (1975), *as reprinted in* 1975 U.S.C.C.A.N. 323). The court agreed with the Commission's conclusion that ''Congress intended that 'competitive

[12] A redistributor is a vendor or any other person that provides an NYSE data product to a data recipient or to any system that a data recipient uses, irrespective of the means of transmission or access.

[13] 15 U.S.C. 78f(b).

[14] 15 U.S.C. 78f(b)(4), (5).

[15] The NASDAQ Stock Market offers proprietary last sale data products for distribution over the Internet and television under alternative fee schedules that are subject to a maximum fee is $50,000 per month. *See* NASDAQ Rule 7039(b).

[16] For example, NYSE Arca, Inc. (''NYSE Arca'') and NYSE MKT LLC (''NYSE MKT'') charge redistribution fees of $2,000 per month for certain proprietary options market data products. *See* Securities Exchange Act Release Nos. 68005 (Oct. 9, 2012), 77 FR 63362 (Oct. 16, 2012) (SR–NYSEArca–2012–106), and 68004 (Oct. 9, 2012), 77 FR 62582 (Oct. 15, 2012) (SR–NYSEMKT–2012–49). NYSE Arca charges a $3,000 per month redistribution fee for the NYSE Arca Integrated Feed. *See* Securities Exchange Act Release No. 66128 (Jan. 10, 2012), 77 FR 2331 (Jan. 17, 2012) (SR–NYSEArca–2011–96). The Options Price Reporting Authority's Fee Schedule, available at *http://www.opradata.com/pdf/fee_schedule.pdf,* includes an ''Internet Service Only'' redistribution fee ($650/month) and standard redistribution fee ($1,500/month).

forces should dictate the services and practices that constitute the U.S. national market system for trading equity securities.' '' [17]

As explained below in the Exchange's Statement on Burden on Competition, the Exchange believes that there is substantial evidence of competition in the marketplace for data and that the Commission can rely upon such evidence in concluding that the fees established in this filing are the product of competition and therefore satisfy the relevant statutory standards.[18] In addition, the existence of alternatives to NYSE Trades and NYSE RRP, including real-time consolidated data, free delayed consolidated data, and proprietary last sale data from other sources, as described below, further ensures that the Exchange cannot set unreasonable fees, or fees that are unreasonably discriminatory, when vendors and subscribers can elect such alternatives.

As the *NetCoalition* decision noted, the Commission is not required to undertake a cost-of-service or ratemaking approach, and the Exchange incorporates by reference into this proposed rule change its affiliate's analysis of this topic in another rule filing.[19]

For these reasons, the Exchange believes that the proposed fees are reasonable, equitable, and not unfairly discriminatory.

B. Self-Regulatory Organization's Statement on Burden on Competition

The Exchange does not believe that the proposed rule change will impose any burden on competition that is not necessary or appropriate in furtherance of the purposes of the Act. An exchange's ability to price its proprietary data feed products is constrained by (1) Actual competition for the sale of proprietary market data products, (2) the existence of inexpensive real-time consolidated data and free delayed consolidated data, and (3) the inherent contestability of the market for proprietary last sale data and the joint product nature of exchange platforms.

The Existence of Actual Competition. The market for proprietary data products is currently competitive and inherently contestable because there is fierce competition for the inputs necessary to the creation of proprietary data and strict pricing discipline for the proprietary products themselves. Numerous exchanges compete with each other for listings and order flow and sales of market data itself, providing virtually limitless opportunities for entrepreneurs who wish to compete in any or all of those areas, including producing and distributing their own market data. Proprietary data products are produced and distributed by each individual exchange, as well as other entities, in a vigorously competitive market.

Competitive markets for listings, order flow, executions, and transaction reports provide pricing discipline for the inputs of proprietary data products and therefore constrain markets from overpricing proprietary market data. The U.S. Department of Justice also has acknowledged the aggressive competition among exchanges, including for the sale of proprietary market data itself. In announcing that the bid for NYSE Euronext by NASDAQ OMX Group Inc. and IntercontinentalExchange Inc. had been abandoned, Assistant Attorney General Christine Varney stated that exchanges ''compete head to head to offer real-time equity data products. These data products include the best bid and offer of every exchange and information on each equity trade, including the last sale.'' [20]

It is common for broker-dealers to further exploit this recognized competitive constraint by sending their order flow and transaction reports to multiple markets, rather than providing them all to a single market. As a 2010 Commission Concept Release noted, the ''current market structure can be described as dispersed and complex'' with ''trading volume * * * dispersed among many highly automated trading centers that compete for order flow in the same stocks'' and ''trading centers offer[ing] a wide range of services that are designed to attract different types of market participants with varying trading needs.'' [21]

In addition, in the case of products that are distributed through market data vendors, the market data vendors themselves provide additional price discipline for proprietary data products because they control the primary means of access to certain end users. These vendors impose price discipline based upon their business models. For example, vendors that assess a surcharge on data they sell are able to refuse to offer proprietary products that their end users do not or will not purchase in sufficient numbers. Internet portals, such as Google, impose price discipline by providing only data that they believe will enable them to attract ''eyeballs'' that contribute to their advertising revenue. Similarly, television broadcasters and Web site and mobile device service providers will not elect to make available NYSE Trades or NYSE RRP unless they believe it will help them attract or maintain viewers/customers for their television, Web site, or mobile device offerings. All of these operate as constraints on pricing proprietary data products.

Joint Platform. Transaction execution and proprietary data products are complementary in that market data is both an input and a byproduct of the execution service. In fact, market data and trade executions are a paradigmatic example of joint products with joint costs. The decision whether and on which platform to post an order will depend on the attributes of the platforms where the order can be posted, including the execution fees, data quality, and price and distribution of their data products. The more trade executions a platform does, the more valuable its market data products become.

The costs of producing market data include not only the costs of the data distribution infrastructure, but also the costs of designing, maintaining, and operating the exchange's transaction execution platform and the cost of regulating the exchange to ensure its fair operation and maintain investor confidence. The total return that a trading platform earns reflects the revenues it receives from both products and the joint costs it incurs. Moreover, an exchange's broker-dealer customers view the costs of transaction executions and market data as a unified cost of doing business with the exchange.

Other market participants have noted that the liquidity provided by the order book, trade execution, core market data, and non-core market data are joint products of a joint platform and have

[17] *NetCoalition,* 615 F.3d at 535.

[18] Section 916 of the Dodd-Frank Wall Street Reform and Consumer Protection Act of 2010 (the ''Dodd-Frank Act'') amended paragraph (A) of Section 19(b)(3) of the Act, 15 U.S.C. 78s(b)(3), to make clear that all exchange fees for market data may be filed by exchanges on an immediately effective basis.

[19] *See* Securities Exchange Act Release No. 63291 (Nov. 9, 2010), 75 FR 70311 (Nov. 17, 2010) (SR–NYSEArca–2010–97).

[20] Press Release, U.S. Department of Justice, Assistant Attorney General Christine Varney Holds Conference Call Regarding NASDAQ OMX Group Inc. and IntercontinentalExchange Inc. Abondoning Their Bid for NYSE Euronext (May 16, 2011), available at *http://www.justice.gov/iso/opa/atr/speeches/2011/at-speech-110516.html.*

[21] Concept Release on Equity Market Structure, Securities Exchange Act Release No. 61358 (Jan. 14, 2010), 75 FR 3594 (Jan. 21, 2010) (File No. S7–02–10). This Concept Release included data from the third quarter of 2009 showing that no market center traded more than 20% of the volume of listed stocks, further evidencing the dispersal of and competition for trading activity. *Id.* at 3598.

common costs.[22] The Exchange agrees with and adopts those discussions and the arguments therein. The Exchange also notes that the economics literature confirms that there is no way to allocate common costs between joint products that would shed any light on competitive or efficient pricing.[23]

Analyzing the cost of market data product production and distribution in isolation from the cost of all of the inputs supporting the creation of market data and market data products will inevitably underestimate the cost of the data and data products. Thus, because it is impossible to obtain the data inputs to create market data products without a fast, technologically robust, and well-regulated execution system, system costs and regulatory costs affect the price of both of obtaining the market data itself and creating and distributing market data products. It would be equally misleading, however, to attribute all of an exchange's costs to the market data portion of an exchange's joint products. Rather, all of an exchange's costs are incurred for the unified purposes of attracting order flow, executing and/or routing orders, and generating and selling data about market activity. The total return that an exchange earns reflects the revenues it receives from the joint products and the total costs of the joint products.

The level of competition and contestability in the market is evident in the numerous alternative venues that compete for order flow, including 12 equities self-regulatory organization (''SRO'') markets, as well as internalizing broker-dealers (''BDs'') and various forms of alternative trading systems (''ATSs''), including dark pools and electronic communication networks (''ECNs''). Competition among trading platforms can be expected to constrain the aggregate return that each platform earns from the sale of its joint products, but different platforms may choose from a range of possible, and equally reasonable, pricing strategies as the means of recovering total costs. For example, some platforms may choose to pay rebates to attract orders, charge relatively low prices for market data products (or provide market data products free of charge), and charge relatively high prices for accessing posted liquidity. Other platforms may choose a strategy of paying lower rebates (or no rebates) to attract orders, setting relatively high prices for market data products, and setting relatively low prices for accessing posted liquidity. In this environment, there is no economic basis for regulating maximum prices for one of the joint products in an industry in which suppliers face competitive constraints with regard to the joint offering.

Existence of Alternatives. The large number of SROs, BDs, and ATSs that currently produce proprietary data or are currently capable of producing it provides further pricing discipline for proprietary data products. Each SRO, ATS, and BD is currently permitted to produce proprietary data products, and many currently do or have announced plans to do so, including but not limited to the Exchange, NYSE MKT, NYSE Arca, NASDAQ OMX, BATS, and Direct Edge.

The fact that proprietary data from ATSs, BDs, and vendors can bypass SROs is significant in two respects. First, non-SROs can compete directly with SROs for the production and sale of proprietary data products. Second, because a single order or transaction report can appear in an SRO proprietary product, a non-SRO proprietary product, or both, the amount of data available via proprietary products is greater in size than the actual number of orders and transaction reports that exist in the marketplace. Because market data users can thus find suitable substitutes for most proprietary market data products, a market that overprices its market data products stands a high risk that users may substitute another source of market data information for its own.

Moreover, consolidated data provides two additional measures of pricing discipline for proprietary data products that are a subset of the consolidated data stream. First, the consolidated data is widely available in real-time at $1 per month for non-professional users. Second, consolidated data is also available at no cost with a 15- or 20-minute delay. Because consolidated data contains marketwide information, it effectively places a cap on the fees assessed for proprietary data (such as last sale data) that is simply a subset of the consolidated data. The mere availability of low-cost or free consolidated data provides a powerful form of pricing discipline for proprietary data products that contain data elements that are a subset of the consolidated data by highlighting the optional nature of proprietary products.

Those competitive pressure imposed by available alternatives are evident in the Exchange's proposed pricing. The Digital Media Enterprise Fees, which will permit broader distribution at the same price (in the case of NYSE Trades) or a lower price (in the case of NYSE RRP) than is available today, also are lower than the maximum fee for a similar product offered by another exchange[24] and lower than the television distribution fee charged by CTA.[25] The proposed redistribution fees also are comparable to other exchanges' similar fees.[26]

In addition to the competition and price discipline described above, the market for proprietary data products is also highly contestable because market entry is rapid and inexpensive. The history of electronic trading is replete with examples of entrants that swiftly grew into some of the largest electronic trading platforms and proprietary data producers: Archipelago, Bloomberg Tradebook, Island, RediBook, Attain, TrackECN, BATS Trading and Direct Edge. Today, BATS and Direct Edge provide certain market data at no charge on their Web sites in order to attract more order flow, and use revenue rebates from resulting additional

[22] *See* Securities Exchange Act Release No. 62887 (Sept. 10, 2010), 75 FR 57092, 57095 (Sept. 17, 2010) (SR–Phlx–2010–121); Securities Exchange Act Release No. 62907 (Sept. 14, 2010), 75 FR 57314, 57317 (Sept. 20, 2010) (SR–NASDAQ–2010–110); and Securities Exchange Act Release No. 62908 (Sept. 14, 2010), 75 FR 57321, 57324 (Sept. 20, 2010) (SR–NASDAQ–2010–111) (''all of the exchange's costs are incurred for the unified purposes of attracting order flow, executing and/or routing orders, and generating and selling data about market activity. The total return that an exchange earns reflects the revenues it receives from the joint products and the total costs of the joint products.''); *see also* August 1, 2008 Comment Letter of Jeffrey S. Davis, Vice President and Deputy General Counsel, NASDAQ OMX Group, Inc., Statement of Janusz Ordover and Gustavo Bamberger (''because market data is both an input to and a byproduct of executing trades on a particular platform, market data and trade execution services are an example of 'joint products' with 'joint costs.' ''), attachment at pg. 4, *available at www.sec.gov/comments/34-57917/3457917-12.pdf.*

[23] *See generally* Mark Hirschey, Fundamentals of Managerial Economics, at 600 (2009) (''It is important to note, however, that although it is possible to determine the separate marginal costs of goods produced in variable proportions, it is impossible to determine their individual average costs. This is because common costs are expenses necessary for manufacture of a joint product. Common costs of production—raw material and equipment costs, management expenses, and other overhead—cannot be allocated to each individual by-product on any economically sound basis.* * * Any allocation of common costs is wrong and arbitrary.''). This is not new economic theory. *See, e.g.,* F. W. Taussig, ''A Contribution to the Theory of Railway Rates,'' *Quarterly Journal of Economics* V(4) 438, 465 (July 1891) (''Yet, surely, the division is purely arbitrary. These items of cost, in fact, are jointly incurred for both sorts of traffic; and I cannot share the hope entertained by the statistician of the Commission, Professor Henry C. Adams, that we shall ever reach a mode of apportionment that will lead to trustworthy results.'').

[24] *See supra* n.15.

[25] *See* CTA Plan dated July 1, 2012, Exhibit E, Schedule A–1 at n.6 (television distribution fee capped at $125,000 per month in 2010, with certain increases permitted thereafter) *available at http://www.nyxdata.com/CTA.*

[26] *See supra* n.16.

executions to maintain low execution charges for their users.[27]

Further, data products are valuable to certain end users only insofar as they provide information that end users expect will assist them or their customers in tracking prices and market trends. The Exchange believes that the Digital Media Enterprise Fees, which will permit wider distribution of last sale information at a lower price, may encourage more vendors to choose to offer NYSE Trades or NYSE RRP over multiple communication devices and thereby benefit public investors and other market participants by providing them with more convenient ways to track prices and market trends during the course of the trading day. The Exchange further believes that only vendors that expect to derive a reasonable benefit from redistributing NYSE Trades and NYSE RRP data will choose to become redistributors and pay the attendant monthly fees.

In establishing the proposed fees, the Exchange considered the competitiveness of the market for proprietary data and all of the implications of that competition. The Exchange believes that it has considered all relevant factors and has not considered irrelevant factors in order to establish fair, reasonable, and not unreasonably discriminatory fees and an equitable allocation of fees among all users. The existence of numerous alternatives to the Exchange's products, including real-time consolidated data, free delayed consolidated data, and proprietary data from other sources, ensures that the Exchange cannot set unreasonable fees, or fees that are unreasonably discriminatory, when vendors and subscribers can elect these alternatives or choose not to purchase a specific proprietary data product if its cost to purchase is not justified by the returns any particular vendor or subscriber would achieve through the purchase.

C. Self-Regulatory Organization's Statement on Comments on the Proposed Rule Change Received From Members, Participants or Others

No written comments were solicited or received with respect to the proposed rule change.

[27] This is simply a securities market-specific example of the well-established principle that in certain circumstances more sales at lower margins can be more profitable than fewer sales at higher margins; this example is additional evidence that market data is an inherent part of a market's joint platform.

III. Date of Effectiveness of the Proposed Rule Change and Timing for Commission Action

The foregoing rule change is effective upon filing pursuant to Section 19(b)(3)(A)[28] of the Act and subparagraph (f)(2) of Rule 19b–4[29] thereunder, because it establishes a due, fee, or other charge imposed by the Exchange.

At any time within 60 days of the filing of such proposed rule change, the Commission summarily may temporarily suspend such rule change if it appears to the Commission that such action is necessary or appropriate in the public interest, for the protection of investors, or otherwise in furtherance of the purposes of the Act. If the Commission takes such action, the Commission shall institute proceedings under Section 19(b)(2)(B)[30] of the Act to determine whether the proposed rule change should be approved or disapproved.

IV. Solicitation of Comments

Interested persons are invited to submit written data, views, and arguments concerning the foregoing, including whether the proposed rule change is consistent with the Act. Comments may be submitted by any of the following methods:

Electronic Comments

- Use the Commission's Internet comment form (*http://www.sec.gov/rules/sro.shtml*); or
- Send an email to *rule-comments@sec.gov.* Please include File Number SR–NYSE–2013–24 on the subject line.

Paper Comments

- Send paper comments in triplicate to Elizabeth M. Murphy, Secretary, Securities and Exchange Commission, 100 F Street NE., Washington, DC 20549–1090.

All submissions should refer to File Number SR–NYSE–2013–24. This file number should be included on the subject line if email is used.

To help the Commission process and review your comments more efficiently, please use only one method. The Commission will post all comments on the Commission's Internet Web site (*http://www.sec.gov/rules/sro.shtml*). Copies of the submission, all subsequent amendments, all written statements with respect to the proposed rule change that are filed with the Commission, and all written communications relating to the proposed rule change between the Commission and any person, other than those that may be withheld from the public in accordance with the provisions of 5 U.S.C. 552, will be available for Web site viewing and printing in the Commission's Public Reference Room on official business days between the hours of 10:00 a.m. and 3:00 p.m. Copies of such filing also will be available for inspection and copying at the principal offices of NYSE. All comments received will be posted without change; the Commission does not edit personal identifying information from submissions. You should submit only information that you wish to make available publicly. All submissions should refer to File Number SR–NYSE–2013–24, and should be submitted on or before May 1, 2013.

For the Commission, by the Division of Trading and Markets, pursuant to delegated authority.[31]

Kevin M. O'Neill,

Deputy Secretary.

[FR Doc. 2013–08324 Filed 4–9–13; 8:45 am]

BILLING CODE 8011–01–P

[28] 15 U.S.C. 78s(b)(3)(A).

[29] 17 CFR 240.19b–4(f)(2).

[30] 15 U.S.C. 78s(b)(2)(B).

[31] 17 CFR 200.30–3(a)(12).

SECURITIES AND EXCHANGE COMMISSION

[Release No. 34–69300; File No. SR–NYSEMKT–2013–31]

Self-Regulatory Organizations; NYSE MKT LLC; Notice of Filing and Immediate Effectiveness of Proposed Rule Change Establishing Certain Fees for the NYSE MKT Trades and NYSE MKT Realtime Reference Prices Market Data Products

Dated: April 4, 2013.

Pursuant to Section 19(b)(1)[1] of the Securities Exchange Act of 1934 (the ''Act'')[2] and Rule 19b–4 thereunder,[3] notice is hereby given that, on March 21, 2013, NYSE MKT LLC (the ''Exchange'' or ''NYSE MKT'') filed with the Securities and Exchange Commission (the ''Commission'') the proposed rule change as described in Items I, II, and III below, which Items have been prepared by the self-regulatory organization. The Commission is publishing this notice to solicit comments on the proposed rule change from interested persons.

[1] 15 U.S.C. 78s(b)(1).

[2] 15 U.S.C. 78a.

[3] 17 CFR 240.19b–4.

I. Self-Regulatory Organization's Statement of the Terms of Substance of the Proposed Rule Change

The Exchange proposes to establish certain fees for the NYSE MKT Trades and NYSE MKT Realtime Reference Prices (''NYSE MKT RRP'') market data products. The text of the proposed rule change is available on the Exchange's Web site at *www.nyse.com,* at the principal office of the Exchange, and at the Commission's Public Reference Room.

II. Self-Regulatory Organization's Statement of the Purpose of, and Statutory Basis for, the Proposed Rule Change

In its filing with the Commission, the self-regulatory organization included statements concerning the purpose of, and basis for, the proposed rule change and discussed any comments it received on the proposed rule change. The text of those statements may be examined at the places specified in Item IV below. The Exchange has prepared summaries, set forth in sections A, B, and C below, of the most significant parts of such statements.

A. Self-Regulatory Organization's Statement of the Purpose of, and Statutory Basis for, the Proposed Rule Change

1. Purpose

The Exchange proposes to establish certain fees for the NYSE MKT Trades and NYSE MKT RRP market data products.

Background

Current NYSE MKT Trades Basic and Broadcast Fees

In 2010, the Securities and Exchange Commission (''SEC'' or the ''Commission'') approved the NYSE MKT Trades data feed and certain fees for it.[4] NYSE MKT Trades is a NYSE MKT-only market data feed that allows a vendor to redistribute on a real-time basis the same last sale information that the Exchange reports under the Consolidated Tape Association (''CTA'') Plan for inclusion in the CTA Plan's consolidated data streams and certain other related data elements. Specifically, NYSE MKT Trades includes the real-time last sale price, time, size, and bid/ask quotations for each security traded on the Exchange and a stock summary message. The stock summary message updates every minute and includes NYSE MKT's opening price, high price, low price, closing price, and cumulative volume for the security.

The Exchange currently charges NYSE MKT Trades data feed recipients an access fee of $750 per month, and a subscriber fee for professional subscribers of $10 per month per device, which may be counted, at the election of the vendor based on the number of ''Subscriber Entitlements'' [5] (collectively, these fees are referred to in this filing as ''NYSE MKT Trades basic fees''). In July 2012, the Exchange added a fee for distribution by television broadcasters (''Broadcast Fee''), which is $5,000 per month.[6] The television broadcast distribution method differs from the other distribution methods in that the data is available in a temporary, view-only mode on television screens.

Current NYSE MKT RRP Fees

The Exchange also offers NYSE MKT RRP.[7] NYSE MKT RRP is designed for Web site distribution and includes the real-time last sale price and time for each security traded on the Exchange as well as the stock summary message, but does not include the size of each trade or bid/ask quotations.

The Exchange currently charges a flat fee of $10,000 per month with no user-based fees for NYSE MKT RRP. For that fee, the vendor may provide NYSE MKT RRP to an unlimited number of the vendor's subscribers and customers without having to differentiate between professional subscribers and nonprofessional subscribers, without having to account for the extent of access to the data, and without having to report the number of users. As an alternative to the NYSE MKT RRP flat monthly fee, the Exchange offers an alternative fee of $.004 for each real-time reference price that a vendor disseminates to its customers (''per query fee''), which is capped at $10,000 per month, the same amount as the flat fee. In order to take advantage of the per-query fee, a vendor must document that it has the ability to measure accurately the number of queries and must have the ability to report aggregate query quantities on a monthly basis. The per-query fee is imposed on vendors, not end-users. There are currently no fees for NYSE MKT RRP that are specifically designed for television or mobile device distribution.

NYSE MKT RRP was created to allow distribution of a last sale data product for reference purposes on Web sites at a low cost that would facilitate distribution to millions of retail investors and relieve vendors of administrative burdens.[8] NYSE MKT RRP is an alternative to delayed prices and is not intended for use in trading decisions.[9] As such, distribution of NYSE MKT RRP is subject to certain requirements. Specifically, vendors may not provide NYSE MKT RRP in a context in which a trading or order routing decision can be implemented unless CTA data is available in an equivalent manner, must label NYSE MKT RRP as NYSE MKT-only data, and must provide a hyperlinked notice similar to the one provided for CTA delayed data.[10]

New Digital Media Offerings

The Exchange recently created a new version of NYSE MKT Trades, NYSE MKT Trades Digital Media, which will allow market data vendors, television broadcasters, Web site and mobile device service providers, and others to distribute the product to their customers for viewing via television, Web site, and mobile devices.[11] The NYSE MKT Trades Digital Media product includes access to the real-time last sale price, time, and size for each security traded on the Exchange as well as the stock summary message, but does not include access to the bid/ask quotation that is included with NYSE MKT Trades product under the basic fees or Broadcast Fee. Vendors may not provide the NYSE MKT Trades Digital Media product in a context in which a trading or order routing decision can be implemented unless CTA data is available in an equivalent manner, must label the product as NYSE MKT-only data, and must provide a hyperlinked notice similar to the one provided for CTA delayed data.

The Exchange also will offer NYSE MKT RRP Digital Media so that NYSE MKT RRP will be available for distribution in the same manner as NYSE MKT Trades Digital Media, via television, Web site, and mobile devices. The data elements of NYSE MKT RRP (last sale price, time, and stock summary message) will remain unchanged from today's NYSE MKT RRP product offering.

The Exchange has established these Digital Media products in recognition of

[4] *See* Securities Exchange Act Release No. 62187 (May 27, 2010), 75 FR 31500 (June 3, 2010) (SR–NYSEAmex–2010–35).

[5] *See id.* at 31501.

[6] *See* Securities Exchange Act Release No. 67438 (July 13, 2012), 77 FR 42535 (July 19, 2012) (SR–NYSEMKT–2012–19).

[7] *See* Securities Exchange Act Release No. 61403 (Jan. 22, 2010), 75 FR 4598 (Jan. 28, 2010) (SR–NYSEAmex–2009–85).

[8] *Id.*

[9] *Id.*

[10] *See* Securities Exchange Act Release No. 61144 (Dec. 10, 2009), 74 FR 67275, 67276–77 (Dec. 18, 2009) (SR–NYSEAmex–2009–85).

[11] *See* SR–NYSEMKT–2013–30.

the demand for a more seamless and easier-to-administer data distribution model that takes into account the expanded variety of media and communication devices that investors utilize today. For example, a television broadcaster could display the NYSE MKT Trades data during market-related television programming and on its Web site and allow its viewers to view the data via their mobile devices, creating a more seamless distribution model that will allow investors more choice in how they receive and view market data.

Proposed Digital Media Fees

The NYSE MKT Trades Digital Media Enterprise Fee will be $5,000 per month, and the NYSE MKT RRP Digital Media Enterprise Fee will be $2,500 per month. The Exchange notes that the NYSE MKT RRP Digital Media Enterprise Fee is lower than NYSE MKT Trades Digital Media Enterprise Fee because it does not include trade size data. Vendors that pay these fees will not be required to pay an access fee, but they will be required to pay the redistribution fees as described below. As with the current NYSE MKT RRP product and the Broadcast Fee, a vendor paying the Digital Media Enterprise Fee may deliver the NYSE MKT Trades and NYSE MKT RRP data to an unlimited number of television, Web site, and mobile device viewers without having to differentiate between professional subscribers and nonprofessional subscribers, without having to account for the extent of access to the data, and without having to report the number of users.

For NYSE MKT Trades, the television-only $5,000 Broadcast Fee option will no longer be available. For NYSE MKT RRP, web-only distribution for $10,000 per month will no longer be available. The Exchange does not believe that any customers would elect these options in light of the broader distribution offered with the new Digital Media Enterprise Fees and the substantially lower price for NYSE MKT RRP Digital Media.

The Exchange will continue to offer the $.004 per query fee for NYSE MKT RRP to any vendor that so chooses, but the Exchange proposes to reduce the cap to $2,500, the same amount as the NYSE MKT RRP Digital Media Enterprise Fee. Vendors and subscribers receiving NYSE MKT Trades via traditional distribution methods, e.g. a Bloomberg terminal or a broker-dealer customer Web site that permits order entry, will not be eligible for Digital Media Enterprise Fees and will continue to pay NYSE MKT Trades basic fees.

Redistribution Fees

The Exchange also proposes to charge a redistribution fee of $750 per month for NYSE MKT Trades and $1,500 per month for NYSE MKT RRP.[12] The redistribution fees will apply regardless of whether the customer is eligible for the Digital Media Enterprise Fees or NYSE MKT Trades basic fees.

Operative Date

The Digital Media Enterprise Fees will be operative on April 1, 2013 and the redistribution fees will be operative on May 1, 2013.

2. Statutory Basis

The Exchange believes that the proposed rule change is consistent with the provisions of Section 6 of the Act,[13] in general, and Sections 6(b)(4) and 6(b)(5) of the Act,[14] in particular, in that it provides an equitable allocation of reasonable fees among users and recipients of the data and is not designed to permit unfair discrimination among customers, issuers, and brokers.

The proposed NYSE MKT Trades Digital Media Enterprise Fee of $5,000 per month and NYSE MKT RRP Digital Media Enterprise Fee of $2,500 per month are reasonable because they will offer a means for vendors to more widely distribute NYSE MKT Trades and NYSE MKT RRP data to investors for informational purposes at the same cost (in the case of NYSE MKT Trades) or a lower cost (in the case of NYSE MKT RRP) than is available today. Currently, NYSE MKT Trades can be distributed via television for a $5,000 monthly fee, but that fee does not include Web site or mobile device distribution. NYSE MKT RRP can be distributed over Web sites for a $10,000 monthly fee, but that fee does not include television or mobile device distribution. The Exchange believes that the proposed Digital Media Enterprise Fees are reasonable because in certain instances they are less than the fees charged by another exchange for a similar product.[15] The Exchange also believes that it is reasonable to charge more for NYSE MKT Trades Digital Media than NYSE MKT RRP Digital Media because the former includes trade size data. The Exchange believes that the price reduction for NYSE MKT RRP coupled with the broader distribution options will make the product more attractive and result in its greater availability to investors. The Exchange believes that reducing the cap for the per query fee from $10,000 to $2,500 is reasonable because it will be equal to the proposed monthly NYSE MKT RRP Digital Media Enterprise Fee. The Exchange believes that reducing the cap for the per query fee is equitable and not unfairly discriminatory because it is designed to ensure that vendors that elect the per query fee do not pay more for real-time reference price data than vendors that pay a flat fee for unlimited use.

The proposed Digital Media Enterprise Fees also are equitable and not unfairly discriminatory because they will be applied uniformly to market data vendors, television broadcasters, Web site and mobile service providers, or any other person that distributes the data on the basis described in this filing. The Exchange believes that it is appropriate to offer a lower cost fee structure that is designed to facilitate broader media distribution of the NYSE MKT Trades and NYSE MKT RRP data for informational purposes because it will benefit investors generally. Moreover, the value of the data distributed generally in the media for informational purposes differs from when it is distributed in manner in which it can immediately be utilized for trading decisions. The Exchange believes that the data is more valuable in that latter context, and as such, it is fair and equitable to have differential pricing for it.

In establishing the Digital Media Enterprise Fees, the Exchange recognizes that there is demand for a more seamless and easier-to-administer data distribution model that takes into account the expanded variety of media and communication devices that investors utilize today. As is the case with the current NYSE MKT RRP product and the Broadcast Fee, the Exchange believes that the Digital Media Enterprise Fee will be easy to administer because vendors that purchase it will not have to differentiate between professional subscribers and nonprofessional subscribers, account for the extent of access to the data, or report the number of users; this is a significant reduction in vendors' administrative burdens and is a significant value to vendors. For example, a television broadcaster could display the NYSE MKT Trades Digital Media data during market-related television programming and on its Web site and allow its

[12] A redistributor is a vendor or any other person that provides an NYSE MKT data product to a data recipient or to any system that a data recipient uses, irrespective of the means of transmission or access.

[13] 15 U.S.C. 78f(b).

[14] 15 U.S.C. 78f(b)(4), (5).

[15] The NASDAQ Stock Market offers proprietary last sale data products for distribution over the Internet and television under alternative fee schedules that are subject to a maximum fee is $50,000 per month. *See* NASDAQ Rule 7039(b).

viewers to view the data via their mobile devices, creating a more seamless distribution model that will allow investors more choice in how they receive and view market data, all without having to account for and/or measure who accesses the data and how much they do so. By easing administration, broadening distribution channels, and, in the case of NYSE MKT RRP, reducing prices, the Exchange believes that more vendors will choose to offer NYSE MKT Trades and NYSE MKT RRP, thereby expanding the distribution of market data for the benefit of investors.

The proposed redistribution fees also are reasonable because they are comparable to other redistribution fees charged by the Exchange as well as other exchanges.[16] The Exchange believes it is reasonable to charge redistribution fees because vendors receive value from redistributing the data in their business products for their customers. The redistribution fees also are equitable and not unfairly discriminatory because they will be charged on an equal basis only to those vendors that choose to redistribute the data.

The decision of the United States Court of Appeals for the District of Columbia Circuit in *NetCoalition* v. *SEC,* 615 F.3d 525 (D.C. Cir. 2010), upheld the Commission's reliance upon the existence of competitive market mechanisms to set reasonable and equitably allocated fees for proprietary market data:

In fact, the legislative history indicates that the Congress intended that the market system 'evolve through the interplay of competitive forces as unnecessary regulatory restrictions are removed' and that the SEC wield its regulatory power 'in those situations where competition may not be sufficient,' such as in the creation of a 'consolidated transactional reporting system.'

Id. at 535 (quoting H.R. Rep. No. 94–229 at 92 (1975), *as reprinted in* 1975 U.S.C.C.A.N. 323). The court agreed with the Commission's conclusion that ''Congress intended that 'competitive forces should dictate the services and practices that constitute the U.S. national market system for trading equity securities.' '' [17]

As explained below in the Exchange's Statement on Burden on Competition, the Exchange believes that there is substantial evidence of competition in the marketplace for data and that the Commission can rely upon such evidence in concluding that the fees established in this filing are the product of competition and therefore satisfy the relevant statutory standards.[18] In addition, the existence of alternatives to NYSE MKT Trades and NYSE MKT RRP, including real-time consolidated data, free delayed consolidated data, and proprietary last sale data from other sources, as described below, further ensures that the Exchange cannot set unreasonable fees, or fees that are unreasonably discriminatory, when vendors and subscribers can elect such alternatives.

As the *NetCoalition* decision noted, the Commission is not required to undertake a cost-of-service or ratemaking approach, and the Exchange incorporates by reference into this proposed rule change its affiliate's analysis of this topic in another rule filing.[19]

For these reasons, the Exchange believes that the proposed fees are reasonable, equitable, and not unfairly discriminatory.

B. Self-Regulatory Organization's Statement on Burden on Competition

The Exchange does not believe that the proposed rule change will impose any burden on competition that is not necessary or appropriate in furtherance of the purposes of the Act. An exchange's ability to price its proprietary data feed products is constrained by (1) Actual competition for the sale of proprietary market data products, (2) the existence of inexpensive real-time consolidated data and free delayed consolidated data, and (3) the inherent contestability of the market for proprietary last sale data and the joint product nature of exchange platforms.

The Existence of Actual Competition

The market for proprietary data products is currently competitive and inherently contestable because there is fierce competition for the inputs necessary to the creation of proprietary data and strict pricing discipline for the proprietary products themselves. Numerous exchanges compete with each other for listings and order flow and sales of market data itself, providing virtually limitless opportunities for entrepreneurs who wish to compete in any or all of those areas, including producing and distributing their own market data. Proprietary data products are produced and distributed by each individual exchange, as well as other entities, in a vigorously competitive market.

Competitive markets for listings, order flow, executions, and transaction reports provide pricing discipline for the inputs of proprietary data products and therefore constrain markets from overpricing proprietary market data. The U.S. Department of Justice also has acknowledged the aggressive competition among exchanges, including for the sale of proprietary market data itself. In announcing that the bid for NYSE Euronext by NASDAQ OMX Group Inc. and IntercontinentalExchange Inc. had been abandoned, Assistant Attorney General Christine Varney stated that exchanges ''compete head to head to offer real-time equity data products. These data products include the best bid and offer of every exchange and information on each equity trade, including the last sale.'' [20]

It is common for broker-dealers to further exploit this recognized competitive constraint by sending their order flow and transaction reports to multiple markets, rather than providing them all to a single market. As a 2010 Commission Concept Release noted, the ''current market structure can be described as dispersed and complex'' with ''trading volume * * * dispersed among many highly automated trading centers that compete for order flow in the same stocks'' and ''trading centers offer[ing] a wide range of services that are designed to attract different types of market participants with varying trading needs.'' [21]

[16] For example, the Exchange and NYSE Arca, Inc. (''NYSE Arca'') charge redistribution fees of $2,000 per month for certain proprietary options market data products. *See* Securities Exchange Act Release Nos. 68005 (Oct. 9, 2012), 77 FR 63362 (Oct. 16, 2012) (SR–NYSEArca–2012–106), and 68004 (Oct. 9, 2012), 77 FR 62582 (Oct. 15, 2012) (SR–NYSEMKT–2012–49). NYSE Arca charges a $3,000 per month redistribution fee for the NYSE Arca Integrated Feed. *See* Securities Exchange Act Release No. 66128 (Jan. 10, 2012), 77 FR 2331 (Jan. 17, 2012) (SR–NYSEArca–2011–96). The Options Price Reporting Authority's Fee Schedule, available at *http://www.opradata.com/pdf/fee_schedule.pdf,* includes an ''Internet Service Only'' redistribution fee ($650/month) and standard redistribution fee ($1,500/month).

[17] *NetCoalition,* 615 F.3d at 535.

[18] Section 916 of the Dodd-Frank Wall Street Reform and Consumer Protection Act of 2010 (the ''Dodd-Frank Act'') amended paragraph (A) of Section 19(b)(3) of the Act, 15 U.S.C. 78s(b)(3), to make clear that all exchange fees for market data may be filed by exchanges on an immediately effective basis.

[19] *See* Securities Exchange Act Release No. 63291 (Nov. 9, 2010), 75 FR 70311 (Nov. 17, 2010) (SR–NYSEArca–2010–97).

[20] Press Release, U.S. Department of Justice, Assistant Attorney General Christine Varney Holds Conference Call Regarding NASDAQ OMX Group Inc. and IntercontinentalExchange Inc. Abandoning Their Bid for NYSE Euronext (May 16, 2011), available at *http://www.justice.gov/iso/opa/atr/speeches/2011/at-speech-110516.html.*

[21] Concept Release on Equity Market Structure, Securities Exchange Act Release No. 61358 (Jan. 14, 2010), 75 FR 3594 (Jan. 21, 2010) (File No. S7–02–

In addition, in the case of products that are distributed through market data vendors, the market data vendors themselves provide additional price discipline for proprietary data products because they control the primary means of access to certain end users. These vendors impose price discipline based upon their business models. For example, vendors that assess a surcharge on data they sell are able to refuse to offer proprietary products that their end users do not or will not purchase in sufficient numbers. Internet portals, such as Google, impose price discipline by providing only data that they believe will enable them to attract ''eyeballs'' that contribute to their advertising revenue. Similarly, television broadcasters and Web site and mobile device service providers will not elect to make available NYSE MKT Trades or NYSE MKT RRP unless they believe it will help them attract or maintain viewers/customers for their television, Web site, or mobile device offerings. All of these operate as constraints on pricing proprietary data products.

Joint Platform

Transaction execution and proprietary data products are complementary in that market data is both an input and a byproduct of the execution service. In fact, market data and trade executions are a paradigmatic example of joint products with joint costs. The decision whether and on which platform to post an order will depend on the attributes of the platforms where the order can be posted, including the execution fees, data quality, and price and distribution of their data products. The more trade executions a platform does, the more valuable its market data products become.

The costs of producing market data include not only the costs of the data distribution infrastructure, but also the costs of designing, maintaining, and operating the exchange's transaction execution platform and the cost of regulating the exchange to ensure its fair operation and maintain investor confidence. The total return that a trading platform earns reflects the revenues it receives from both products and the joint costs it incurs. Moreover, an exchange's broker-dealer customers view the costs of transaction executions and market data as a unified cost of doing business with the exchange.

Other market participants have noted that the liquidity provided by the order book, trade execution, core market data, and non-core market data are joint products of a joint platform and have common costs.[22] The Exchange agrees with and adopts those discussions and the arguments therein. The Exchange also notes that the economics literature confirms that there is no way to allocate common costs between joint products that would shed any light on competitive or efficient pricing.[23]

Analyzing the cost of market data product production and distribution in isolation from the cost of all of the inputs supporting the creation of market data and market data products will inevitably underestimate the cost of the data and data products. Thus, because it is impossible to obtain the data inputs to create market data products without a fast, technologically robust, and well-regulated execution system, system costs and regulatory costs affect the price of both of obtaining the market data itself and creating and distributing market data products. It would be equally misleading, however, to attribute all of an exchange's costs to the market data portion of an exchange's joint products. Rather, all of an exchange's costs are incurred for the unified purposes of attracting order flow, executing and/or routing orders, and generating and selling data about market activity. The total return that an exchange earns reflects the revenues it receives from the joint products and the total costs of the joint products.

The level of competition and contestability in the market is evident in the numerous alternative venues that compete for order flow, including 12 equities self-regulatory organization (''SRO'') markets, as well as internalizing broker-dealers (''BDs'') and various forms of alternative trading systems (''ATSs''), including dark pools and electronic communication networks (''ECNs''). Competition among trading platforms can be expected to constrain the aggregate return that each platform earns from the sale of its joint products, but different platforms may choose from a range of possible, and equally reasonable, pricing strategies as the means of recovering total costs. For example, some platforms may choose to pay rebates to attract orders, charge relatively low prices for market data products (or provide market data products free of charge), and charge relatively high prices for accessing posted liquidity. Other platforms may choose a strategy of paying lower rebates (or no rebates) to attract orders, setting relatively high prices for market data products, and setting relatively low prices for accessing posted liquidity. In this environment, there is no economic basis for regulating maximum prices for one of the joint products in an industry in which suppliers face competitive constraints with regard to the joint offering.

Existence of Alternatives

The large number of SROs, BDs, and ATSs that currently produce proprietary data or are currently capable of producing it provides further pricing discipline for proprietary data products. Each SRO, ATS, and BD is currently permitted to produce proprietary data products, and many currently do or have announced plans to do so, including but not limited to the Exchange, NYSE, NYSE Arca, NASDAQ OMX, BATS, and Direct Edge.

The fact that proprietary data from ATSs, BDs, and vendors can bypass SROs is significant in two respects. First, non-SROs can compete directly with SROs for the production and sale of proprietary data products. Second, because a single order or transaction report can appear in an SRO proprietary

10). This Concept Release included data from the third quarter of 2009 showing that no market center traded more than 20% of the volume of listed stocks, further evidencing the dispersal of and competition for trading activity. *Id.* at 3598.

[22] *See* Securities Exchange Act Release No. 62887 (Sept. 10, 2010), 75 FR 57092, 57095 (Sept. 17, 2010) (SR–Phlx–2010–121); Securities Exchange Act Release No. 62907 (Sept. 14, 2010), 75 FR 57314, 57317 (Sept. 20, 2010) (SR–NASDAQ–2010–110); and Securities Exchange Act Release No. 62908 (Sept. 14, 2010), 75 FR 57321, 57324 (Sept. 20, 2010) (SR–NASDAQ–2010–111) (''all of the exchange's costs are incurred for the unified purposes of attracting order flow, executing and/or routing orders, and generating and selling data about market activity. The total return that an exchange earns reflects the revenues it receives from the joint products and the total costs of the joint products.''); *see also* August 1, 2008 Comment Letter of Jeffrey S. Davis, Vice President and Deputy General Counsel, NASDAQ OMX Group, Inc., Statement of Janusz Ordover and Gustavo Bamberger (''because market data is both an input to and a byproduct of executing trades on a particular platform, market data and trade execution services are an example of 'joint products' with 'joint costs.'''), attachment at pg. 4, *available at www.sec.gov/comments/34-57917/3457917-12.pdf.*

[23] *See generally* Mark Hirschey, **FUNDAMENTALS OF MANAGERIAL ECONOMICS,** at 600 (2009) (''It is important to note, however, that although it is possible to determine the separate marginal costs of goods produced in variable proportions, it is impossible to determine their individual average costs. This is because common costs are expenses necessary for manufacture of a joint product. Common costs of production—raw material and equipment costs, management expenses, and other overhead—cannot be allocated to each individual by-product on any economically sound basis * * *. Any allocation of common costs is wrong and arbitrary.''). This is not new economic theory. *See, e.g.,* F. W. Taussig, ''A Contribution to the Theory of Railway Rates,'' *Quarterly Journal of Economics* V(4) 438, 465 (July 1891) (''Yet, surely, the division is purely arbitrary. These items of cost, in fact, are jointly incurred for both sorts of traffic; and I cannot share the hope entertained by the statistician of the Commission, Professor Henry C. Adams, that we shall ever reach a mode of apportionment that will lead to trustworthy results.'').

product, a non-SRO proprietary product, or both, the amount of data available via proprietary products is greater in size than the actual number of orders and transaction reports that exist in the marketplace. Because market data users can thus find suitable substitutes for most proprietary market data products, a market that overprices its market data products stands a high risk that users may substitute another source of market data information for its own.

Moreover, consolidated data provides two additional measures of pricing discipline for proprietary data products that are a subset of the consolidated data stream. First, the consolidated data is widely available in real-time at $1 per month for non-professional users. Second, consolidated data is also available at no cost with a 15- or 20-minute delay. Because consolidated data contains marketwide information, it effectively places a cap on the fees assessed for proprietary data (such as last sale data) that is simply a subset of the consolidated data. The mere availability of low-cost or free consolidated data provides a powerful form of pricing discipline for proprietary data products that contain data elements that are a subset of the consolidated data by highlighting the optional nature of proprietary products.

Those competitive pressure imposed by available alternatives are evident in the Exchange's proposed pricing. The Digital Media Enterprise Fees, which will permit broader distribution at the same price (in the case of NYSE MKT Trades) or a lower price (in the case of NYSE MKT RRP) than is available today, also are lower than the maximum fee for a similar product offered by another exchange[24] and lower than the television distribution fee charged by CTA.[25] The proposed redistribution fees also are comparable to the Exchange's and another exchange's similar fees.[26]

In addition to the competition and price discipline described above, the market for proprietary data products is also highly contestable because market entry is rapid and inexpensive. The history of electronic trading is replete with examples of entrants that swiftly grew into some of the largest electronic trading platforms and proprietary data producers: Archipelago, Bloomberg Tradebook, Island, RediBook, Attain, TrackECN, BATS Trading and Direct Edge. Today, BATS and Direct Edge provide certain market data at no charge on their Web sites in order to attract more order flow, and use revenue rebates from resulting additional executions to maintain low execution charges for their users.[27]

Further, data products are valuable to certain end users only insofar as they provide information that end users expect will assist them or their customers in tracking prices and market trends. The Exchange believes that the Digital Media Enterprise Fees, which will permit wider distribution of last sale information at either the same or a lower price, may encourage more vendors to choose to offer NYSE MKT Trades or NYSE MKT RRP over multiple communication devices and thereby benefit public investors and other market participants by providing them with more convenient ways to track prices and market trends during the course of the trading day. The Exchange further believes that only vendors that expect to derive a reasonable benefit from redistributing NYSE MKT Trades and NYSE MKT RRP data will choose to become redistributors and pay the attendant monthly fees.

In establishing the proposed fees, the Exchange considered the competitiveness of the market for proprietary data and all of the implications of that competition. The Exchange believes that it has considered all relevant factors and has not considered irrelevant factors in order to establish fair, reasonable, and not unreasonably discriminatory fees and an equitable allocation of fees among all users. The existence of numerous alternatives to the Exchange's products, including real-time consolidated data, free delayed consolidated data, and proprietary data from other sources, ensures that the Exchange cannot set unreasonable fees, or fees that are unreasonably discriminatory, when vendors and subscribers can elect these alternatives or choose not to purchase a specific proprietary data product if its cost to purchase is not justified by the returns any particular vendor or subscriber would achieve through the purchase.

C. Self-Regulatory Organization's Statement on Comments on the Proposed Rule Change Received From Members, Participants or Others

No written comments were solicited or received with respect to the proposed rule change.

III. Date of Effectiveness of the Proposed Rule Change and Timing for Commission Action

The foregoing rule change is effective upon filing pursuant to Section 19(b)(3)(A)[28] of the Act and subparagraph (f)(2) of Rule 19b–4[29] thereunder, because it establishes a due, fee, or other charge imposed by the Exchange.

At any time within 60 days of the filing of such proposed rule change, the Commission summarily may temporarily suspend such rule change if it appears to the Commission that such action is necessary or appropriate in the public interest, for the protection of investors, or otherwise in furtherance of the purposes of the Act. If the Commission takes such action, the Commission shall institute proceedings under Section 19(b)(2)(B)[30] of the Act to determine whether the proposed rule change should be approved or disapproved.

IV. Solicitation of Comments

Interested persons are invited to submit written data, views, and arguments concerning the foregoing, including whether the proposed rule change is consistent with the Act. Comments may be submitted by any of the following methods:

Electronic Comments

- Use the Commission's Internet comment form (*http://www.sec.gov/rules/sro.shtml*); or
- Send an email to *rule-comments@sec.gov.* Please include File Number SR–NYSEMKT–2013–31 on the subject line.

Paper Comments

- Send paper comments in triplicate to Elizabeth M. Murphy, Secretary, Securities and Exchange Commission, 100 F Street NE., Washington, DC 20549–1090.

All submissions should refer to File Number SR–NYSEMKT–2013–31. This file number should be included on the subject line if email is used.

To help the Commission process and review your comments more efficiently, please use only one method. The

[24] *See supra* n.15.

[25] *See* CTA Plan dated July 1, 2012, Exhibit E, Schedule A–1 at n.6 (television distribution fee capped at $125,000 per month in 2010, with certain increases permitted thereafter) *available at http://www.nyxdata.com/CTA.*

[26] *See supra* n.16.

[27] This is simply a securities market-specific example of the well-established principle that in certain circumstances more sales at lower margins can be more profitable than fewer sales at higher margins; this example is additional evidence that market data is an inherent part of a market's joint platform.

[28] 15 U.S.C. 78s(b)(3)(A).

[29] 17 CFR 240.19b–4(f)(2).

[30] 15 U.S.C. 78s(b)(2)(B).

Commission will post all comments on the Commission's Internet Web site (*http://www.sec.gov/rules/sro.shtml).* Copies of the submission, all subsequent amendments, all written statements with respect to the proposed rule change that are filed with the Commission, and all written communications relating to the proposed rule change between the Commission and any person, other than those that may be withheld from the public in accordance with the provisions of 5 U.S.C. 552, will be available for Web site viewing and printing in the Commission's Public Reference Room on official business days between the hours of 10:00 a.m. and 3:00 p.m. Copies of such filing also will be available for inspection and copying at the principal offices of NYSE. All comments received will be posted without change; the Commission does not edit personal identifying information from submissions. You should submit only information that you wish to make available publicly. All submissions should refer to File Number SR–NYSEMKT–2013–31, and should be submitted on or before May 1, 2013.

For the Commission, by the Division of Trading and Markets, pursuant to delegated authority.[31]

Kevin M. O'Neill,

Deputy Secretary.

[FR Doc. 2013–08326 Filed 4–9–13; 8:45 am]

BILLING CODE 8011–01–P

[31] 17 CFR 200.30–3(a)(12).

SECURITIES AND EXCHANGE COMMISSION

[Release No. 34–69303; File No. SR–NYSEArca–2013–33]

Self-Regulatory Organizations; NYSE Arca, Inc.; Notice of Filing of Proposed Rule Change, as Modified by Amendment No. 1, To List and Trade the International Bear ETF Under NYSE Arca Equities Rule 8.600

April 4, 2013.

Pursuant to Section 19(b)(1)[1] of the Securities Exchange Act of 1934 (the ''Act'')[2] and Rule 19b–4 thereunder,[3] notice is hereby given that, on March 21, 2013, NYSE Arca, Inc. (the ''Exchange'' or ''NYSE Arca'') filed with the Securities and Exchange Commission (the ''Commission'') the proposed rule change as described in Items I and II, below, which Items have been prepared by the self-regulatory organization. On April 3, 2013, the Exchange filed Amendment No. 1 to the proposed rule change.[4] The Commission is publishing this notice to solicit comments on the proposed rule change, as modified by Amendment No. 1, from interested persons.

[1] 15 U.S.C. 78s(b)(1).

[2] 15 U.S.C. 78a.

[3] 17 CFR 240.19b–4.

I. Self-Regulatory Organization's Statement of the Terms of Substance of the Proposed Rule Change

The Exchange proposes to list and trade the following under NYSE Arca Equities Rule 8.600 (''Managed Fund Shares''): International Bear ETF. The text of the proposed rule change is available on the Exchange's Web site at *www.nyse.com,* at the principal office of the Exchange, and at the Commission's Public Reference Room.

II. Self-Regulatory Organization's Statement of the Purpose of, and Statutory Basis for, the Proposed Rule Change

In its filing with the Commission, the self-regulatory organization included statements concerning the purpose of, and basis for, the proposed rule change and discussed any comments it received on the proposed rule change. The text of those statements may be examined at the places specified in Item IV below. The Exchange has prepared summaries, set forth in sections A, B, and C below, of the most significant parts of such statements.

A. Self-Regulatory Organization's Statement of the Purpose of, and the Statutory Basis for, the Proposed Rule Change

1. Purpose

The Exchange proposes to list and trade shares (''Shares'') of the following under NYSE Arca Equities Rule 8.600, which governs the listing and trading of Managed Fund Shares:[5] International Bear ETF (''Fund'').[6] The Shares will be offered by AdvisorShares Trust (the ''Trust''), a statutory trust organized under the laws of the State of Delaware and registered with the Securities and Exchange Commission (the ''Commission'') as an open-end management investment company.[7] The investment adviser to the Fund is AdvisorShares Investments, LLC (the ''Adviser''). The Fund will have a sub-adviser (''Sub-Adviser'') that provides day-to-day portfolio management of the Fund. Foreside Fund Services, LLC (the ''Distributor'') is the principal underwriter and distributor of the Fund's Shares. The Bank of New York Mellon (the ''Administrator'') serves as the administrator, custodian, transfer agent and fund accounting agent for the Fund.

Commentary .06 to Rule 8.600 provides that, if the investment adviser to the investment company issuing Managed Fund Shares is affiliated with a broker-dealer, such investment adviser shall erect a ''fire wall'' between the investment adviser and the broker-dealer with respect to access to information concerning the composition and/or changes to such investment company portfolio. In addition, Commentary .06 further requires that personnel who make decisions on the open-end fund's portfolio composition must be subject to procedures designed to prevent the use and dissemination of material nonpublic information regarding the open-end fund's portfolio.[8] Commentary .06 to Rule

[4] In Amendment No. 1, the Exchange made certain technical changes to the proposed rule change, including the substitution of the phrase ''transact in'' for the word ''purchase'' in the following sentence on page 5 of this Notice: ''The Fund may transact in equity securities traded in the U.S. on registered exchanges or, in the case of American Depositary Receipts, the over-the-counter market.''

[5] A Managed Fund Share is a security that represents an interest in an investment company registered under the Investment Company Act of 1940 (15 U.S.C. 80a–1) (''1940 Act'') organized as an open-end investment company or similar entity that invests in a portfolio of securities selected by its investment adviser consistent with its investment objectives and policies. In contrast, an open-end investment company that issues Investment Company Units, listed and traded on the Exchange under NYSE Arca Equities Rule 5.2(j)(3), seeks to provide investment results that correspond generally to the price and yield performance of a specific foreign or domestic stock index, fixed income securities index or combination thereof.

[6] The Commission has approved listing and trading on the Exchange of a number of actively managed funds under Rule 8.600. *See, e.g.,* Securities Exchange Act Release Nos. 63076 (October 12, 2010), 75 FR 63874 (October 18, 2010) (SR–NYSEArca–2010–79) (order approving Exchange listing and trading of Cambria Global Tactical ETF); 63802 (January 31, 2011), 76 FR 6503 (February 4, 2011) (SR–NYSEArca–2010–118) (order approving Exchange listing and trading of the SiM Dynamic Allocation Diversified Income ETF and SiM Dynamic Allocation Growth Income ETF); and 65468 (October 3, 2011), 76 FR 62873 (October 11, 2001) [sic] (SR–NYSEArca–2011–51) (order approving Exchange listing and trading of TrimTabs Float Shrink ETF).

[7] The Trust is registered under the 1940 Act. On October 19, 2012, the Trust filed with the Commission an amendment to its registration statement on Form N–1A under the Securities Act of 1933 (15 U.S.C. 77a), and under the 1940 Act relating to the Fund (File Nos. 333–157876 and 811–22110) (''Registration Statement''). The description of the operation of the Trust and the Fund herein is based, in part, on the Registration Statement. In addition, the Commission has issued an order granting certain exemptive relief to the Trust under the 1940 Act. *See* Investment Company Act Release No. 29291 (May 28, 2010) (File No. 812–13677) (''Exemptive Order'').

[8] An investment adviser to an open-end fund is required to be registered under the Investment Advisers Act of 1940 (the ''Advisers Act''). As a

Continued

8.600 is similar to Commentary .03(a)(i) and (iii) to NYSE Arca Equities Rule 5.2(j)(3); however, Commentary .06 in connection with the establishment of a ''fire wall'' between the investment adviser and the broker-dealer reflects the applicable open-end fund's portfolio, not an underlying benchmark index, as is the case with index-based funds. The Adviser is not affiliated with a broker-dealer. In the event (a) the Adviser becomes newly affiliated with a broker-dealer, (b) the Sub-Adviser is affiliated with a broker-dealer, or (c) any new adviser or sub-adviser becomes affiliated with a broker-dealer, it will implement a fire wall with respect to such broker-dealer regarding access to information concerning the composition and/or changes to the portfolio, and will be subject to procedures designed to prevent the use and dissemination of material non-public information regarding such portfolio.

Description of the Fund

According to the Registration Statement, the Fund's investment objective will be to seek capital appreciation through short sales of international equity securities.

According to the Registration Statement, the Sub-Adviser will seek to achieve the Fund's investment objective by short selling a portfolio of foreign equity securities, U.S. exchange-listed and traded equity securities of non-U.S. organizations, and American Depositary Receipts (''ADRs''), as described in more detail herein. The Fund may invest in such equity securities of any capitalization range and in any market sector at any time as necessary to seek to achieve the Fund's investment objective. Under normal circumstances,[9] at least 80% of the Fund's net assets will be such equity securities, which the Fund will short sell.

According to the Registration Statement, the Fund will be actively managed and thus will not seek to replicate the performance of a specified passive index of securities. Instead, it will use an active investment strategy to seek to meet its investment objective. The Sub-Adviser, subject to the oversight of the Adviser and the Board of Trustees, will have discretion on a daily basis to manage the Fund's portfolio in accordance with the Fund's investment objective and investment policies. The Sub-Adviser will utilize various fundamental and technical research techniques in security selection. In selecting short positions, the Sub-Adviser will seek to identify securities that may be overvalued and due for capital depreciation. Once a position is included in the Fund's portfolio, it will be subject to regular fundamental and technical risk management review.

According to the Registration Statement, the equity securities in which the Fund may invest consist of common stocks, preferred stocks, warrants to acquire common stock, securities convertible into common stock, investments in master limited partnerships, rights and REITs. The Fund may transact in equity securities traded in the U.S. on registered exchanges or, in the case of ADRs, the over-the-counter market. The Fund may short sell up to 10% of its total assets in unsponsored ADRs. The Fund may invest in the equity securities of foreign issuers, including the securities of foreign issuers in emerging market countries.[10]

According to the Registration Statement, the Fund may invest in issuers located outside the United States directly, or in financial instruments that are indirectly linked to the performance of foreign issuers. Examples of such financial instruments include ADRs, Global Depositary Receipts (''GDRs''), European Depositary Receipts (''EDRs''), International Depository Receipts (''IDRs''), ''ordinary shares,'' and ''New York shares.'' [11] Except for up to 10% of ADRs, which may be unsponsored, such financial instruments will all be listed and traded on registered exchanges in the U.S. or markets that are members of the ISG or are parties to a comprehensive surveillance sharing agreement with the Exchange.

According to the Registration Statement, the Fund may engage regularly in short sales transactions in which the Fund sells a security it does not own. To complete such a transaction, the Fund must borrow or otherwise obtain the security to make delivery to the buyer. The Fund then is obligated to replace the security borrowed by purchasing the security at the market price at the time of replacement. The price at such time may be more or less than the price at which the security was sold by the Fund.

According to the Registration Statement, until the security is replaced, the Fund will be required to pay to the lender amounts equal to any dividends or interest, which accrue during the period of the loan. To borrow the security, the Fund also may be required to pay a premium, which would increase the cost of the security sold. The Fund may also use repurchase agreements to satisfy delivery obligations in short sales transactions. The proceeds of the short sale will be retained by the broker, to the extent necessary to meet the margin

result, the Adviser and Sub-Adviser and their related personnel are subject to the provisions of Rule 204A–1 under the Advisers Act relating to codes of ethics. This Rule requires investment advisers to adopt a code of ethics that reflects the fiduciary nature of the relationship to clients as well as compliance with other applicable securities laws. Accordingly, procedures designed to prevent the communication and misuse of non-public information by an investment adviser must be consistent with Rule 204A–1 under the Advisers Act. In addition, Rule 206(4)–7 under the Advisers Act makes it unlawful for an investment adviser to provide investment advice to clients unless such investment adviser has (i) adopted and implemented written policies and procedures reasonably designed to prevent violation, by the investment adviser and its supervised persons, of the Advisers Act and the Commission rules adopted thereunder; (ii) implemented, at a minimum, an annual review regarding the adequacy of the policies and procedures established pursuant to subparagraph (i) above and the effectiveness of their implementation; and (iii) designated an individual (who is a supervised person) responsible for administering the policies and procedures adopted under subparagraph (i) above.

[9] The term ''under normal circumstances'' includes, but is not limited to, the absence of adverse market, economic, political or other conditions, including extreme volatility or trading halts in the equity markets or the financial markets generally; operational issues causing dissemination of inaccurate market information; or force majeure type events such as systems failure, natural or man-made disaster, act of God, armed conflict, act of terrorism, riot or labor disruption or any similar intervening circumstance.

[10] According to the Registration Statement, emerging or developing markets exist in countries that are considered to be in the initial stages of industrialization. The Fund will invest only in foreign equity securities that trade in markets that are members of the Intermarket Surveillance Group (''ISG'') or are parties to a comprehensive surveillance sharing agreement with the Exchange. For a list of the current members of ISG, *see www.isgportal.org.*

[11] According to the Registration Statement, ADRs are U.S. dollar denominated receipts typically issued by U.S. banks and trust companies that evidence ownership of underlying securities issued by a foreign issuer. The underlying securities may not necessarily be denominated in the same currency as the securities into which they may be converted. The underlying securities are held in trust by a custodian bank or similar financial institution in the issuer's home country. The depositary bank may not have physical custody of the underlying securities at all times and may charge fees for various services, including forwarding dividends and interest and corporate actions. Generally, ADRs in registered form are designed for use in domestic securities markets and are traded on exchanges or over-the-counter in the U.S. GDRs, EDRs, and IDRs are similar to ADRs in that they are certificates evidencing ownership of shares of a foreign issuer, however, GDRs, EDRs, and IDRs may be issued in bearer form and denominated in other currencies, and are generally designed for use in specific or multiple securities markets outside the U.S. EDRs, for example, are designed for use in European securities markets while GDRs are designed for use throughout the world. Ordinary shares are shares of foreign issuers that are traded abroad and on a U.S. exchange. New York shares are shares that a foreign issuer has allocated for trading in the U.S. ADRs, ordinary shares, and New York shares all may be purchased with and sold for U.S. dollars.

requirements, until the short position is closed out.

According to the Registration Statement, until the Fund closes its short position or replaces the borrowed security, the Fund will: (a) Maintain a segregated account containing cash or liquid securities at such a level that (i) the amount deposited in the account plus the amount deposited with the broker as collateral will equal the current value of the security sold short and (ii) the amount deposited in the segregated account plus the amount deposited with the broker as collateral will not be less than the market value of the security at the time the security was sold short; or (b) otherwise cover the Fund's short position. The Fund may use up to 100% of its portfolio to engage in short sales transactions and collateralize its open short positions.

Other Investments

While the Fund will invest at least 80% of its assets as described above, the Fund may invest in certain other investments, as described below. According to the Registration Statement, the Fund may invest in exchange-traded funds (''ETFs'') registered pursuant to the 1940 Act, exchange-traded notes (''ETNs''),[12] and other exchange-traded products (together with ETFs and ETNs, collectively, ''ETPs'').[13] The Fund will invest only in ETPs that trade in markets that are members of the ISG or are parties to a comprehensive surveillance sharing agreement with the Exchange.

According to the Registration Statement, on a day-to-day basis, the Fund may hold U.S. government securities,[14] short-term high quality fixed income securities, money market instruments, overnight and fixed-term repurchase agreements, cash and cash equivalents with maturities of one year or less for investment purposes and to cover its short positions.

According to the Registration Statement, to respond to adverse market, economic, political or other conditions, the Fund may refrain from short selling and increase its investment in U.S. government securities, short-term high quality fixed income securities, money market instruments, overnight and fixed-term repurchase agreements, cash and cash equivalents with maturities of one year or less. The Fund may hold little or no short positions for extended periods, depending on the Sub-Adviser's assessment of market conditions.

According to the Registration Statement, the Fund may invest in several different types of investment companies from time to time, including mutual funds and business development companies (''BDCs''),[15] when the Adviser or the Sub-Adviser believes such an investment is in the best interests of the Fund and its shareholders. For example, the Fund may elect to invest in another investment company when such an investment presents a more efficient investment option than buying securities individually. The Fund also may invest in investment companies that are included as components of an index, such as BDCs, to seek to track the performance of that index. The Fund will invest only in BDCs that trade in markets that are members of the ISG or are parties to a comprehensive surveillance sharing agreement with the Exchange.

According to the Registration Statement, the Fund may invest, under normal circumstances, up to 10% of its net assets in debt securities. Debt securities include a variety of fixed income obligations, including, but not limited to, corporate debt securities, government securities, municipal securities, convertible securities, and mortgage-backed securities. Debt securities include investment-grade securities, non-investment-grade securities, and unrated securities. The Fund may invest in non-investment-grade securities.[16] The Fund may invest in variable and floating rate securities.

The Fund may enter into repurchase agreements with financial institutions, which may be deemed to be loans.[17] The Fund may enter into reverse repurchase agreements without limit as part of the Fund's investment strategy.[18] However, the Fund does not expect to engage, under normal circumstances, in reverse repurchase agreements with respect to more than 33 ⅓% of its assets.

According to the Registration Statement, the Fund may invest directly and indirectly in foreign currencies.

According to the Registration Statement, the Fund, in the ordinary course of business, may purchase securities on a when-issued or delayed-delivery basis (*i.e.,* delivery and payment can take place between a

[12] According to the Registration Statement, ETNs are senior, unsecured unsubordinated debt securities issued by an underwriting bank that are designed to provide returns that are linked to a particular benchmark less investor fees. ETNs have a maturity date and, generally, are backed only by the creditworthiness of the issuer. It is expected that the issuer's credit rating will be investment grade at the time of investment.

[13] ETPs may include Investment Company Units (as described in NYSE Arca Equities Rule 5.2(j)(3)); Index-Linked Securities (as described in NYSE Arca Equities Rule 5.2(j)(6)); Portfolio Depositary Receipts (as described in NYSE Arca Equities Rule 8.100); Trust Issued Receipts (as described in NYSE Arca Equities Rule 8.200); Commodity-Based Trust Shares (as described in NYSE Arca Equities Rule 8.201); Currency Trust Shares (as described in NYSE Arca Equities Rule 8.202); Commodity Index Trust Shares (as described in NYSE Arca Equities Rule 8.203); Trust Units (as described in NYSE Arca Equities Rule 8.500); Managed Fund Shares (as described in NYSE Arca Equities Rule 8.600), and closed-end funds. The ETPs all will be listed and traded in the U.S. on registered exchanges. The Fund may invest in the securities of ETPs registered under the 1940 Act consistent with the requirements of Section 12(d)(1) of the 1940 Act, or any rule, regulation or order of the Commission or interpretation thereof. The Fund will only make such investments in conformity with the requirements of Section 817 of the Internal Revenue Code of 1986. The Fund may invest in ETPs that are pooled investment vehicles not registered pursuant to the 1940 Act. Closed-end funds are pooled investment vehicles that are registered under the 1940 Act and whose shares are listed and traded on U.S. national securities exchanges.

[14] The Fund may invest in U.S. government securities and U.S. Treasury zero-coupon bonds. Securities issued or guaranteed by the U.S. government or its agencies or instrumentalities include U.S. Treasury securities, which are backed by the full faith and credit of the U.S. Treasury and which differ only in their interest rates, maturities, and times of issuance; U.S. Treasury bills, which have initial maturities of one-year or less; U.S. Treasury notes, which have initial maturities of one to ten years; and U.S. Treasury bonds, which generally have initial maturities of greater than ten years.

[15] According to the Registration Statement, a BDC is a less common type of closed-end investment company that more closely resembles an operating company than a typical investment company. BDCs generally focus on investing in, and providing managerial assistance to, small, developing, financially troubled, private companies or other companies that may have value that can be realized over time and with management assistance.

[16] Non-investment-grade securities, also referred to as ''high-yield securities'' or ''junk bonds,'' are debt securities that are rated lower than the four highest rating categories by a nationally recognized statistical rating organization (for example, lower than Baa3 by Moody's Investors Service, Inc. or lower than BBB—by Standard & Poor's, a division of The McGraw-Hill Companies, Inc.) or are determined to be of comparable quality by the Adviser or the Sub-Adviser.

[17] The Fund follows certain procedures designed to minimize the risks inherent in such agreements. These procedures include effecting repurchase transactions only with large, well-capitalized and well-established financial institutions whose condition will be continually monitored by the Sub-Adviser. In addition, the value of the collateral underlying the repurchase agreement will always be at least equal to the repurchase price, including any accrued interest earned on the repurchase agreement. It is the current policy of the Fund not to invest in repurchase agreements that do not mature within seven days if any such investment, together with any other illiquid assets held by the Fund, amount to more than 15% of the Fund's net assets.

[18] Reverse repurchase agreements involve sales by the Fund of portfolio assets concurrently with an agreement by the Fund to repurchase the same assets at a later date at a fixed price. The Fund will establish a segregated account with the Trust's custodian bank in which the Fund will maintain cash, cash equivalents or other portfolio securities equal in value to the Fund's obligations in respect of reverse repurchase agreements. Such reverse repurchase agreements could be deemed to be a borrowing, but are not senior securities.

month and 120 days after the date of the transaction). These securities are subject to market fluctuation and no interest accrues to the purchaser during this period. At the time the Fund makes the commitment to purchase securities on a when-issued or delayed-delivery basis, the Fund will record the transaction and thereafter reflect the value of the securities, each day, in determining the Fund's net asset value (''NAV''). The Fund will not purchase securities on a when-issued or delayed-delivery basis if, as a result, more than 15% of the Fund's net assets would be so invested.

According to the Registration Statement, the Fund may not (i) with respect to 75% of its total assets, purchase securities of any issuer (except securities issued or guaranteed by the U.S. Government, its agencies or instrumentalities or shares of investment companies) if, as a result, more than 5% of its total assets would be invested in the securities of such issuer; or (ii) acquire more than 10% of the outstanding voting securities of any one issuer.[19]

The Fund may not invest 25% or more of its total assets in the securities of one or more issuers conducting their principal business activities in the same industry or group of industries. The Fund will not invest 25% or more of its total assets in any investment company that so concentrates. This limitation does not apply to investments in securities issued or guaranteed by the U.S. Government, its agencies or instrumentalities, or shares of investment companies.[20]

The Fund may hold up to an aggregate amount of 15% of its net assets in illiquid securities (calculated at the time of investment), including Rule 144A securities. The Fund will monitor its portfolio liquidity on an ongoing basis to determine whether, in light of current circumstances, an adequate level of liquidity is being maintained, and will consider taking appropriate steps in order to maintain adequate liquidity if, through a change in values, net assets, or other circumstances, more than 15% of the Fund's net assets are held in illiquid securities. Illiquid securities include securities subject to contractual or other restrictions on resale and other instruments that lack readily available markets as determined in accordance with Commission staff guidance.[21]

According to the Registration Statement, the Fund will seek to qualify for treatment as a Regulated Investment Company under the Internal Revenue Code.[22]

The Fund will not invest in options contracts, futures contracts or swap agreements. The Fund's investments will be consistent with the Fund's investment objective and will not be used to enhance leverage.

Net Asset Value

The Fund will calculate its NAV by: (i) Taking the current market value of its total assets; (ii) subtracting any liabilities; and (iii) dividing that amount by the total number of Shares owned by shareholders.

The Fund will calculate NAV once each business day as of the regularly scheduled close of trading on the New York Stock Exchange, LLC (the ''NYSE'') (normally, 4:00 p.m., Eastern Time).

In calculating NAV, the Fund generally will value its investment portfolio at market price. If market prices are unavailable or the Fund believes that they are unreliable, or when the value of a security has been materially affected by events occurring after the relevant market closes, the Fund will price those securities at fair value as determined in good faith using methods approved by the Trust's Board of Trustees.

Creation and Redemption of Shares

According to the Registration Statement, the Fund will issue and redeem Shares on a continuous basis at the NAV only in a large specified number of Shares called a ''Creation Unit.'' The Shares of the Fund will be ''created'' at their NAV by market makers, large investors and institutions only in block-size Creation Units of at least 25,000 Shares.

The Trust will issue and sell Shares of the Fund only in Creation Units on a continuous basis through the Distributor, at their NAV next determined after receipt, on any business day, for an order received in proper form. Creation Units of the Fund will be sold only for cash. Creation Units will be sold at the NAV next computed, plus a transaction fee. All orders to create Creation Units must be placed for one or more Creation Unit size aggregations of Shares. All orders to create must be received by the Distributor no later than 3:00 p.m. Eastern Time, an hour before the close of the regular trading session on the NYSE (ordinarily 4:00 p.m. Eastern Time) on the date such order is placed in order for the creation of Creation Units to be effected based on the NAV of Shares of the Fund as next determined on such date after receipt of the order in proper form. All purchases of the Fund will be effected through a transfer of cash directly through DTC.

Shares may be redeemed only in Creation Units at their NAV next determined after receipt of a redemption request in proper form by the Fund through the Administrator and only on a business day. The Trust will not redeem Shares in amounts less than Creation Units. The redemption proceeds for a Creation Unit of the Fund will consist solely of cash in an amount equal to the NAV of the Shares being redeemed, as next determined after receipt of a request in proper form, less a redemption transaction fee. An order to redeem Creation Units will be deemed received on the transmittal date if such order is received by the Administrator not later than 3:00 p.m. Eastern Time, on such transmittal date; such order will be effected based on the NAV of the Fund as next determined.

The Shares will conform to the initial and continued listing criteria under NYSE Arca Equities Rule 8.600. Consistent with NYSE Arca Equities Rule 8.600(d)(2)(B)(ii), the Adviser will implement and maintain, or be subject to, procedures designed to prevent the use and dissemination of material non-public information regarding the actual components of the Fund's portfolio. The Exchange represents that, for initial and/or continued listing, the Fund will be in compliance with Rule 10A–3 [23] under the Exchange Act, as provided by NYSE Arca Equities Rule 5.3. A minimum of 100,000 Shares will be outstanding at the commencement of trading on the Exchange. The Exchange will obtain a representation from the issuer of the Shares that the NAV per

[19] The diversification standard is set forth in Section 5(b)(1) of the 1940 Act.

[20] *See* Form N–1A, Item 9. The Commission has taken the position that a fund is concentrated if it invests more than 25% of the value of its total assets in any one industry. *See, e.g.,* Investment Company Act Release No. 9011 (October 30, 1975), 40 FR 54241 (November 21, 1975).

[21] The Commission has stated that long-standing Commission guidelines have required open-end funds to hold no more than 15% of their net assets in illiquid securities and other illiquid assets. *See* Investment Company Act Release No. 28193 (March 11, 2008), 73 FR 14618 (March 18, 2008), footnote 34. *See also,* Investment Company Act Release No. 5847 (October 21, 1969), 35 FR 19989 (December 31, 1970) (Statement Regarding ''Restricted Securities''); Investment Company Act Release No. 18612 (March 12, 1992), 57 FR 9828 (March 20, 1992) (Revisions of Guidelines to Form N–1A). A fund's portfolio security is illiquid if it cannot be disposed of in the ordinary course of business within seven days at approximately the value ascribed to it by the fund. *See* Investment Company Act Release No. 14983 (March 12, 1986), 51 FR 9773 (March 21, 1986) (adopting amendments to Rule 2a-7 under the 1940 Act); Investment Company Act Release No. 17452 (April 23, 1990), 55 FR 17933 (April 30, 1990) (adopting Rule 144A under the Securities Act.

[22] 26 U.S.C. 851.

[23] 17 CFR 240.10A–3.

Share will be calculated daily and that the NAV and the Disclosed Portfolio as defined in NYSE Arca Equities Rule 8.600(c)(2) will be made available to all market participants at the same time.

Availability of Information

The Fund's Web site (*www.advisorshares.com*), which will be publicly available prior to the public offering of Shares, will include a form of the prospectus for the Fund that may be downloaded. The Fund's Web site will include additional quantitative information updated on a daily basis, including, for the Fund, (1) daily trading volume, the prior business day's reported closing price, NAV and mid-point of the bid/ask spread at the time of calculation of such NAV (the ''Bid/Ask Price''),[24] and a calculation of the premium and discount of the Bid/Ask Price against the NAV, and (2) data in chart format displaying the frequency distribution of discounts and premiums of the daily Bid/Ask Price against the NAV, within appropriate ranges, for each of the four previous calendar quarters. On each business day, before commencement of trading in Shares in the Core Trading Session on the Exchange, the Fund's Web site will disclose the Disclosed Portfolio that will form the basis for the Fund's calculation of NAV at the end of the business day.[25]

On a daily basis, the Fund's Web site will disclose for each portfolio security and other financial instrument of the Fund the following information: ticker symbol (if applicable), name of security and financial instrument, number of shares and dollar value of securities and financial instruments held in the portfolio, and percentage weighting of the security and financial instrument in the portfolio. The Web site information will be publicly available at no charge.

Investors can also obtain the Trust's Statement of Additional Information (''SAI''), the Fund's Shareholder Reports, and its Form N–CSR and Form N–SAR, filed twice a year. The Trust's SAI and Shareholder Reports will be available free upon request from the Trust, and those documents and the Form N–CSR and Form N–SAR may be viewed on-screen or downloaded from the Commission's Web site at *www.sec.gov.* Information regarding market price and trading volume of the Shares will be continually available on a real-time basis throughout the day on brokers' computer screens and other electronic services. Information regarding the previous day's closing price and trading volume information for the Shares will be published daily in the financial section of newspapers. Quotation and last sale information for the Shares will be available via the Consolidated Tape Association (''CTA'') high-speed line, and, for the underlying securities, will be available from the securities exchanges on which they are listed. Information regarding the equity securities, debt securities, fixed income instruments, and other investments held by the Fund will be available from the U.S. and non-U.S. securities exchanges trading such securities, automated quotation systems, published or other public sources, or on-line information services such as Bloomberg or Reuters. In addition, the Portfolio Indicative Value, as defined in NYSE Arca Equities Rule 8.600 (c)(3), will be widely disseminated at least every 15 seconds during the Core Trading Session by one or more major market data vendors.[26] The dissemination of the Portfolio Indicative Value, together with the Disclosed Portfolio, will allow investors to determine the value of the underlying portfolio of the Fund on a daily basis and will provide a close estimate of that value throughout the trading day.

Additional information regarding the Trust and the Shares, including investment strategies, risks, creation and redemption procedures, fees, portfolio holdings disclosure policies, distributions and taxes is included in the Registration Statement. All terms relating to the Fund that are referred to, but not defined in, this proposed rule change are defined in the Registration Statement.

Trading Halts

With respect to trading halts, the Exchange may consider all relevant factors in exercising its discretion to halt or suspend trading in the Shares of the Fund.[27] Trading in Shares of the Fund will be halted if the circuit breaker parameters in NYSE Arca Equities Rule 7.12 have been reached. Trading also may be halted because of market conditions or for reasons that, in the view of the Exchange, make trading in the Shares inadvisable. These may include: (1) The extent to which trading is not occurring in the securities and/or the financial instruments comprising the Disclosed Portfolio of the Fund; or (2) whether other unusual conditions or circumstances detrimental to the maintenance of a fair and orderly market are present. Trading in the Shares will be subject to NYSE Arca Equities Rule 8.600(d)(2)(D), which sets forth circumstances under which Shares of the Fund may be halted.

Trading Rules

The Exchange deems the Shares to be equity securities, thus rendering trading in the Shares subject to the Exchange's existing rules governing the trading of equity securities. Shares will trade on the NYSE Arca Marketplace from 4 a.m. to 8 p.m. Eastern Time in accordance with NYSE Arca Equities Rule 7.34 (Opening, Core, and Late Trading Sessions). The Exchange has appropriate rules to facilitate transactions in the Shares during all trading sessions. As provided in NYSE Arca Equities Rule 7.6, Commentary .03, the minimum price variation (''MPV'') for quoting and entry of orders in equity securities traded on the NYSE Arca Marketplace is $0.01, with the exception of securities that are priced less than $1.00 for which the MPV for order entry is $0.0001.

Surveillance

The Exchange represents that trading in the Shares will be subject to the existing trading surveillances, administered by the Financial Industry Regulatory Authority (''FINRA'') on behalf of the Exchange, which are designed to detect violations of Exchange rules and applicable federal securities laws.[28] The Exchange represents that these procedures are adequate to properly monitor Exchange trading of the Shares in all trading sessions and to deter and detect violations of Exchange rules and applicable federal securities laws.

The surveillances referred to above generally focus on detecting securities trading outside their normal patterns, which could be indicative of manipulative or other violative activity. When such situations are detected, surveillance analysis follows and investigations are opened, where appropriate, to review the behavior of all relevant parties for all relevant trading violations. FINRA, on behalf of the Exchange, will communicate as

[24] The Bid/Ask Price of the Fund is determined using the mid-point of the highest bid and the lowest offer on the Exchange as of the time of calculation of the Fund's NAV. The records relating to Bid/Ask Prices will be retained by the Fund and its service providers.

[25] Under accounting procedures followed by the Fund, trades made on the prior business day (''T'') will be booked and reflected in NAV on the current business day (''T+1''). Accordingly, the Fund will be able to disclose at the beginning of the business day the portfolio that will form the basis for the NAV calculation at the end of the business day.

[26] Currently, it is the Exchange's understanding that several major market data vendors display and/or make widely available Portfolio Indicative Values taken from CTA or other data feeds.

[27] *See* NYSE Arca Equities Rule 7.12, Commentary .04.

[28] FINRA surveils trading on the Exchange pursuant to a regulatory services agreement. The Exchange is responsible for FINRA's performance under this regulatory services agreement.

needed regarding trading in the Shares with other markets that are members of the ISG or with which the Exchange has in place a comprehensive surveillance sharing agreement.[29] Except for up to 10% of ADRs, which may be unsponsored, the Fund will invest only in equity securities (including financial instruments that are linked to the performance of foreign issuers),[30] ETPs and BDCs that trade in markets that are members of the ISG or are parties to a comprehensive surveillance sharing agreement with the Exchange.

In addition, the Exchange also has a general policy prohibiting the distribution of material, non-public information by its employees.

Information Bulletin

Prior to the commencement of trading, the Exchange will inform its Equity Trading Permit Holders in an Information Bulletin (''Bulletin'') of the special characteristics and risks associated with trading the Shares. Specifically, the Bulletin will discuss the following: (1) The procedures for purchases and redemptions of Shares in Creation Unit aggregations (and that Shares are not individually redeemable); (2) NYSE Arca Equities Rule 9.2(a), which imposes a duty of due diligence on its Equity Trading Permit Holders to learn the essential facts relating to every customer prior to trading the Shares; (3) the risks involved in trading the Shares during the Opening and Late Trading Sessions when an updated Portfolio Indicative Value will not be calculated or publicly disseminated; (4) how information regarding the Portfolio Indicative Value is disseminated; (5) the requirement that Equity Trading Permit Holders deliver a prospectus to investors purchasing newly issued Shares prior to or concurrently with the confirmation of a transaction; and (6) trading information.

In addition, the Bulletin will reference that the Fund is subject to various fees and expenses described in the Registration Statement. The Bulletin will discuss any exemptive, no-action, and interpretive relief granted by the Commission from any rules under the Exchange Act. The Bulletin will also disclose that the NAV for the Shares will be calculated after 4:00 p.m. Eastern Time each trading day.

2. Statutory Basis

The basis under the Exchange Act for this proposed rule change is the requirement under Section 6(b)(5)[31] that an exchange have rules that are designed to prevent fraudulent and manipulative acts and practices, to promote just and equitable principles of trade, to remove impediments to, and perfect the mechanism of a free and open market and, in general, to protect investors and the public interest.

The Exchange believes that the proposed rule change is designed to prevent fraudulent and manipulative acts and practices in that the Shares will be listed and traded on the Exchange pursuant to the initial and continued listing criteria in NYSE Arca Equities Rule 8.600. The Exchange has in place surveillance procedures that are adequate to properly monitor trading in the Shares in all trading sessions and to deter and detect violations of Exchange rules and applicable federal securities laws. Except for up to 10% of ADRs, which may be unsponsored, the Fund will invest only in equity securities (including financial instruments that are linked to the performance of foreign issuers),[32] ETPs and BDCs that trade in markets that are members of the ISG or are parties to a comprehensive surveillance sharing agreement with the Exchange. The Exchange may obtain information via ISG from other exchanges that are members of ISG or with which the Exchange has entered into a comprehensive surveillance sharing agreement. The Adviser is not affiliated with a broker-dealer. In the event the Sub-Adviser is affiliated with a broker-dealer, it will implement a fire wall with respect to such broker-dealer regarding access to information concerning the composition and/or changes to the portfolio, and will be subject to procedures designed to prevent the use and dissemination of material non-public information regarding such portfolio. The Fund may not purchase or hold illiquid securities if, in the aggregate, more than 15% of its net assets would be invested in illiquid securities. The Fund will not invest in options contracts, futures contracts or swap agreements. The Fund's investments will be consistent with the Fund's investment objective and will not be used to enhance leverage. The proposed rule change is designed to promote just and equitable principles of trade and to protect investors and the public interest in that the Exchange will obtain a representation from the issuer of the Shares that the NAV per Share will be calculated daily and that the NAV and the Disclosed Portfolio will be made available to all market participants at the same time. Information regarding the equity securities, debt securities, fixed income instruments, and other investments held by the Fund will be available from the U.S. and non-U.S. securities exchanges trading such securities, automated quotation systems, published or other public sources, or on-line information services such as Bloomberg or Reuters. In addition, a large amount of information is publicly available regarding the Fund and the Shares, thereby promoting market transparency. Quotation and last sale information for the Shares will be available via the CTA high-speed line. In addition, the Portfolio Indicative Value will be widely disseminated by the Exchange at least every 15 seconds during the Core Trading Session. The Fund's Web site will include a form of the prospectus for the Fund that may be downloaded, as well as additional quantitative information updated on a daily basis. On each business day, before commencement of trading in Shares in the Core Trading Session on the Exchange, the Fund's Web site will disclose the Disclosed Portfolio that will form the basis for the Fund's calculation of NAV at the end of the business day. On a daily basis, the Fund's Web site will disclose for each portfolio security and other financial instrument of the Fund the following information: ticker symbol (if applicable), name of security and financial instrument, number of shares and dollar value of securities and financial instruments held in the portfolio, and percentage weighting of the security and financial instrument in the portfolio. Moreover, prior to the commencement of trading, the Exchange will inform its Equity Trading Permit Holders in an Information Bulletin of the special characteristics and risks associated with trading the Shares. Trading in Shares of the Fund will be halted if the circuit breaker parameters in NYSE Arca Equities Rule 7.12 have been reached or because of market conditions or for reasons that, in the view of the Exchange, make trading in the Shares inadvisable. Trading in the Shares will be subject to NYSE Arca Equities Rule 8.600(d)(2)(D), which sets forth circumstances under which Shares of the Fund may be halted. In addition, as noted above, investors will have ready access to information regarding the Fund's holdings, the Portfolio Indicative Value, the Disclosed

[29] For a list of the current members of ISG, see *www.isgportal.org.* The Exchange notes that not all components of the Disclosed Portfolio for the Fund may trade on markets that are members of ISG or with which the Exchange has in place a comprehensive surveillance sharing agreement.

[30] *See* note 11, *supra,* and accompanying text.

[31] 15 U.S.C. 78f(b)(5).

[32] *See* note 11, *supra,* and accompanying text.

Portfolio, and quotation and last sale information for the Shares.

The proposed rule change is designed to perfect the mechanism of a free and open market and, in general, to protect investors and the public interest in that it will facilitate the listing and trading of an additional type of actively-managed exchange-traded product that will enhance competition among market participants, to the benefit of investors and the marketplace. As noted above, the Exchange has in place surveillance procedures relating to trading in the Shares and may obtain information via ISG from other exchanges that are members of ISG or with which the Exchange has entered into a comprehensive surveillance sharing agreement. In addition, as noted above, investors will have ready access to information regarding the Fund's holdings, the Portfolio Indicative Value, the Disclosed Portfolio, and quotation and last sale information for the Shares.

B. Self-Regulatory Organization's Statement on Burden on Competition

The Exchange does not believe that the proposed rule change will impose any burden on competition that is not necessary or appropriate in furtherance of the purpose of the Exchange Act. The Exchange notes that the proposed rule change will facilitate the listing and trading of additional types of actively-managed exchange-traded products that will enhance competition among market participants, to the benefit of investors and the marketplace.

C. Self-Regulatory Organization's Statement on Comments on the Proposed Rule Change Received From Members, Participants, or Others

No written comments were solicited or received with respect to the proposed rule change.

III. Date of Effectiveness of the Proposed Rule Change and Timing for Commission Action

Within 45 days of the date of publication of this notice in the **Federal Register** or within such longer period up to 90 days (i) as the Commission may designate if it finds such longer period to be appropriate and publishes its reasons for so finding or (ii) as to which the self-regulatory organization consents, the Commission will:

(A) By order approve or disapprove the proposed rule change, or

(B) institute proceedings to determine whether the proposed rule change should be disapproved.

IV. Solicitation of Comments

Interested persons are invited to submit written data, views, and arguments concerning the foregoing, including whether the proposed rule change is consistent with the Act. Comments may be submitted by any of the following methods:

Electronic Comments

- Use the Commission's Internet comment form (*http://www.sec.gov/rules/sro.shtml*); or
- Send an email to *rule-comments@sec.gov.* Please include File No. SR–NYSEArca-2013–33 on the subject line.

Paper Comments

- Send paper comments in triplicate to Elizabeth M. Murphy, Secretary, Securities and Exchange Commission, 100 F Street, NE., Washington, DC 20549–1090.

All submissions should refer to File No. SR–NYSEArca–2013–33. This file number should be included on the subject line if email is used. To help the Commission process and review your comments more efficiently, please use only one method. The Commission will post all comments on the Commission's Web site (*http://www.sec.gov/rules/sro.shtml*). Copies of the submission, all subsequent amendments, all written statements with respect to the proposed rule change that are filed with the Commission, and all written communications relating to the proposed rule change between the Commission and any person, other than those that may be withheld from the public in accordance with the provisions of 5 U.S.C. 552, will be available for Web site viewing and printing in the Commission's Public Reference Room, 100 F Street, NE., Washington, DC 20549, on official business days between the hours of 10:00 a.m. and 3:00 p.m. Copies of such filing also will be available for inspection and copying at the principal office of the Exchange. All comments received will be posted without change; the Commission does not edit personal identifying information from submissions. You should submit only information that you wish to make available publicly. All submissions should refer to File No. SR–NYSEArca–2013–33 and should be submitted on or before May 1, 2013.

For the Commission, by the Division of Trading and Markets, pursuant to delegated authority.[33]

Kevin M. O'Neill,

Deputy Secretary.

[FR Doc. 2013–08327 Filed 4–9–13; 8:45 am]

BILLING CODE 8011–01–P

SECURITIES AND EXCHANGE COMMISSION

[Release No. 34–69286; File No. SR–NYSE–2013–07]

Self-Regulatory Organizations; New York Stock Exchange LLC; Notice of Designation of a Longer Period for Commission Action on Proposed Rule Change Amending NYSE Rules 451 and 465, and the Related Provisions of Section 402.10 of the NYSE Listed Company Manual, Which Provide a Schedule for the Reimbursement of Expenses by Issuers to NYSE Member Organizations for the Processing of Proxy Materials and Other Issuer Communications Provided To Investors Holding Securities in Street Name, and To Establish a Five-Year Fee for the Development of an Enhanced Brokers Internet Platform

April 3, 2013.

On February 1, 2013, New York Stock Exchange LLC (''NYSE'') filed with the Securities and Exchange Commission (''Commission''), pursuant to Section 19(b)(1) of the Securities Exchange Act of 1934 (''Act'')[1] and Rule 19b–4 thereunder,[2] a proposed rule change to amend the fees set forth in NYSE Rules 451 and 465, and the related provisions of Section 402.10 of the NYSE Listed Company Manual, for the reimbursement of expenses by issuers to NYSE member organizations for the processing of proxy materials and other issuer communications provided to investors holding securities in street name, and to establish a five-year fee for the development of an enhanced brokers internet platform. The proposed rule change was published for comment in the **Federal Register** on February 22, 2013.[3] The Commission received 24 comments on the proposal.[4]

[33] 17 CFR 200.30–3(a)(12).

[1] 15 U.S.C. 78s(b)(1).

[2] 17 CFR 240.19b–4.

[3] *See* Securities Exchange Act Release No. 68936 (February 15, 2013), 78 FR 12381.

[4] *See* letters to Elizabeth M. Murphy, Secretary, Commission from Charles V. Rossi, President, The Securities Transfer Association, dated February 20, 2013 and March 4, 2013; Karen V. Danielson, President, Shareholder Services Association, dated March 4, 2013; Jeanne M. Shafer, dated March 6, 2013; David W. Lovatt, dated March 6, 2013; Stephen Norman, Chair, The Independent Steering

Continued

Section 19(b)(2) of the Act [5] provides that, within 45 days of the publication of notice of the filing of a proposed rule change, or within such longer period up to 90 days as the Commission may designate if it finds such longer period to be appropriate and publishes its reasons for so finding or as to which the self-regulatory organization consents, the Commission shall either approve the proposed rule change, disapprove the proposed rule change, or institute proceedings to determine whether the proposed rule change should be disapproved. The 45th day for this filing is April 8, 2013.

The Commission is extending the 45-day time period for Commission action on the proposed rule change. The Commission finds that it is appropriate to designate a longer period within which to take action on the proposed rule change so that it has sufficient time to consider the Exchange's proposal, as described above, and the comments received.

Accordingly, pursuant to Section 19(b)(2) of the Act,[6] the Commission designates May 23, 2013, as the date by which the Commission should either approve or disapprove or institute proceedings to determine whether to disapprove the proposed rule change (File No. SR–NYSE–2013–07).

For the Commission, by the Division of Trading and Markets, pursuant to delegated authority.[7]

Kevin M. O'Neill,

Deputy Secretary.

[FR Doc. 2013–08308 Filed 4–9–13; 8:45 am]

BILLING CODE 8011–01–P

Committee of Broadridge, dated March 7, 2013; Jeffrey D. Morgan, President & CEO, National Investor Relations Institute, dated March 7, 2013; Kenneth Bertsch, President and CEO, Society of Corporate Secretaries & Governance Professionals, dated March 7, 2013; Niels Holch, Executive Director, Shareholder Communications Coalition, dated March 12, 2013; Geoffrey M. Dugan, General Counsel, iStar Financial Inc., dated March 13, 2013; Paul E. Martin, Chief Financial Officer, Perficient, Inc., dated March 13, 2013; John Harrington, President, Harrington Investments, Inc., dated March 14, 2013; James McRitchie, Shareowner, Corporate Governance, dated March 14, 2013; Clare A. Kretzman, General Counsel, Gartner, Inc., dated March 15, 2013; Tom Quaadman, Vice President, Center for Capital Markets Competitiveness, dated March 15, 2013; Dennis E. Nixon, President, International Bancshares Corporation, dated March 15, 2013; Argus I. Cunningham, Chief Executive Officer, Sharegate Inc., dated March 15, 2013; Laura Berry, Executive Director, Interfaith Center on Corporate Responsibility, dated March 15, 2013; Dorothy M. Donohue, Deputy General Counsel—Securities Regulation, Investment Company Institute, dated March 15, 2013; Charles V. Callan, Senior Vice President—Regulatory Affairs, Broadridge Financial Solutions, Inc., dated March 15, 2013; Brad Philips, Treasurer, Darling International Inc., dated March 15, 2013; John Endean, President, American Business Conference, dated March 18, 2013; Tom Price, Managing Director, The Securities Industry and Financial Markets Association, dated March 18, 2013; and Michael S. O'Brien, Vice President—Corporate Governance Officer, BNY Mellon, March 28, 2013.

[5] 15 U.S.C. 78s(b)(2).

[6] 15 U.S.C. 78s(b)(2).

[7] 17 CFR 200.30–3(a)(31).

SECURITIES AND EXCHANGE COMMISSION

[Release No. 34–69304; File No. SR–PHLX–2013–005]

Self-Regulatory Organizations; NASDAQ OMX PHLX LLC; Order Granting Approval of Proposed Rule Change Regarding Catastrophic Errors

April 4, 2013.

I. Introduction

On January 31, 2013, NASDAQ OMX PHLX LLC (''PHLX'' or ''Exchange'') filed with the Securities and Exchange Commission (''Commission''), pursuant to Section 19(b)(1) of the Securities Exchange Act of 1934 (''Act'') [1] and Rule 19b–4 thereunder,[2] a proposed rule change to amend Rule 1092, Obvious Errors and Catastrophic Errors. The proposed rule change was published for comment in the **Federal Register** on February 19, 2013.[3] The Commission received one comment letter on the proposed rule change.[4] This order approves the proposed rule change.

II. Background

The Exchange proposes to amend Rule 1092(f)(ii) to permit the nullification of trades involving catastrophic errors in certain situations. Specifically, the proposed rule would enable a non-broker dealer customer [5] who is the contra-side to a trade that is deemed to be a catastrophic error to have the trade nullified in instances where the adjusted price would violate the customer's limit price. Trades would adjusted in these circumstances if the customer, or his agent, affirms the customer's willingness to accept the adjusted price through the customer's limit price within 20 minutes of notification of the catastrophic error ruling.[6]

Under the current rule, and under the rules of all options exchanges, all transactions that qualify as a catastrophic error are adjusted, not nullified. The purpose of the proposal is to help market participants better manage their risk by addressing the situation where, under current rules, a trade can be adjusted to a price outside of a customer's limit price, forcing the customer to spend additional money for a trade that it may not be able to afford. The Exchange notes that this proposal is a fair way to address the issue of a customer's limit price while balancing the competing interests of certainty that trades stand with the policy concerns about dealing with true errors.[7]

III. Discussion and Commission Findings

After careful review, the Commission finds that the proposed rule change is consistent with the requirements of the Act [8] and the rules and regulations thereunder applicable to a national securities exchange.[9] In particular, the Commission finds that the proposed rule change is consistent with Section 6(b)(5) of the Act,[10] which requires, among other things, that the Exchange's rules be designed to prevent fraudulent and manipulative acts and practices, to promote just and equitable principles of trade, to foster cooperation and coordination with persons engaged in facilitating transactions in securities, to remove impediments to and perfect the mechanism of a free and open market and a national market system, and, in general, to protect investors and the public interest.

The Commission received one comment letter expressing support for the proposed rule change.[11] The commenter believes that the special treatment afforded by the rule change to non-broker-dealer customers is appropriate because, unlike market makers or broker-dealers, non-broker-dealer customers are less likely to be able to absorb the monetary penalty of being forced into a situation where their

[1] 15 U.S.C. 78s(b)(1).

[2] 17 CFR 240.19b–4.

[3] Securities Exchange Act Release No. 68907 (February 12, 2013), 78 FR 11705 (''Notice'').

[4] *See* Letter from Ellen Greene, Vice President, Securities Industry and Financial Markets Association to Elizabeth M. Murphy, Secretary, Commission, dated March 14, 2013.

[5] The Exchange notes that a professional customer is a customer for purposes of Rule 1092.

[6] The Exchange notes that the 20 minute notification period is similar to the time period used currently with respect to triggering the obvious error review process.

[7] The Exchanges noted that it is focused on this particular situation because of a recent catastrophic error ruling that resulted in an appeal pursuant to Rule 1092(f)(iv).

[8] 15 U.S.C. 78f.

[9] In approving this proposed rule change, the Commission has considered the proposed rule's impact on efficiency, competition, and capital formation. *See* 15 U.S.C. 78c(f).

[10] 15 U.S.C. 78f(b)(5).

[11] *See* note 4, *supra.*

original limit price is violated.[12] The commenter points to other precedents in the options markets for non-broker-dealer customers getting special treatment for similar reasons to the proposed rule change, namely because they are less active in the markets and often have limited funds in their accounts.[13] Finally, the commenter encourages other options exchanges to adopt similar amendments to their Obvious and Catastrophic Error rules.[14]

The Exchange notes that the proposed rule change is not unfairly discriminatory, even though it offers non-broker dealer customers a choice not provided to other market participants. Specifically, the Exchange notes that the existing obvious error rules differentiate among market participants.[15] The Exchange notes further that customers often are treated specially in the options markets, recognizing that they are not necessarily immersed in the day-to-day trading of the markets, are less likely to be watching trading activity in a particular option throughout the day, and may have limited funds in their trading accounts.[16] The Exchange goes on to note that, while the proposed rule change may introduce uncertainty regarding whether a trade will be adjusted or nullified, it eliminates price uncertainty, as customer orders can be adjusted to significantly different prices than their limit prices under the rule prior to this proposed rule change. For this reason, the Exchange believes that the proposed rule change promotes just and equitable principles of trade and protects investors and the public interest.

The Commission notes that in considering the proposed rule change the Exchange has weighed the benefits of certainty to non-broker-dealer customers that their limit price will not be violated against the costs of increased uncertainty to market makers and broker-dealers that their trades may be nullified instead of adjusted depending on whether the other party to the transaction is or is not a customer.[17] The proposed rule change strikes a similar balance on this issue to the approach taken in the Exchange's Obvious Error Rule, whereby transactions in which an Obvious Error occurred with at least one party as a non-specialist are nullified unless both parties agree to adjust the price of the transaction within 30 minutes of being notified of the Obvious Error.[18] For the reasons noted above, the Commission believes that the proposed rule change is consistent with the Act.

It is therefore ordered, pursuant to Section 19(b)(2) of the Act,[19] that the proposed rule change (SR–PHLX–2013–005) is hereby approved.

For the Commission, by the Division of Trading and Markets, pursuant to delegated authority.[20]

Kevin M. O'Neill,

Deputy Secretary.

[FR Doc. 2013–08328 Filed 4–9–13; 8:45 am]

BILLING CODE 8011–01–P

[12] Id.

[13] Id.

[14] Id.

[15] The Exchange notes, for example, that the notification period to begin the obvious error process is shorter for specialists and Registered Options Traders than it is for other market participants.

[16] The Exchange notes that customers often have favorable fees relative to other market participants.

[17] *See* Notice, *supra* note 3.

[18] Id.

[19] 15 U.S.C. 78s(b)(2).

[20] 17 CFR 200.30–3(a)(12).

SECURITIES AND EXCHANGE COMMISSION

[Release No. 34–69287; File No. 4–631]

Joint Industry Plan; Order Approving the Third Amendment to the National Market System Plan to Address Extraordinary Market Volatility by BATS Exchange, Inc., BATS Y-Exchange, Inc., Chicago Board Options Exchange, Incorporated, Chicago Stock Exchange, Inc., EDGA Exchange, Inc., EDGX Exchange, Inc., Financial Industry Regulatory Authority, Inc., NASDAQ OMX BX, Inc., NASDAQ OMX PHLX LLC, The Nasdaq Stock Market LLC, National Stock Exchange, Inc., New York Stock Exchange LLC, NYSE MKT LLC, and NYSE Arca, Inc.

April 3, 2013.

I. Introduction

On February 21, 2013, NYSE Euronext, on behalf of New York Stock Exchange LLC (''NYSE''), NYSE MKT LLC (''NYSE MKT''), and NYSE Arca, Inc. (''NYSE Arca''), and the following parties to the National Market System Plan: BATS Exchange, Inc., BATS Y-Exchange, Inc., Chicago Board Options Exchange, Incorporated, Chicago Stock Exchange, Inc., EDGA Exchange, Inc., EDGX Exchange, Inc., Financial Industry Regulatory Authority, Inc., NASDAQ OMX BX, Inc., NASDAQ OMX PHLX LLC, the Nasdaq Stock Market LLC, and National Stock Exchange, Inc. (collectively with NYSE, NYSE MKT, and NYSE Arca, the ''Participants''), filed with the Securities and Exchange Commission (''Commission'') pursuant to Section 11A of the Securities Exchange Act of 1934 (''Act'') [1] and Rule 608 thereunder,[2] a proposal to amend the Plan to Address Extraordinary Market Volatility (''Plan'').[3] The proposal represents the third amendment to the Plan (''Third Amendment''), and reflects changes unanimously approved by the Participants. The Third Amendment proposes to amend the Plan to provide that odd-lot sized transactions will not be exempt from the limitation on trades provision of Section VI.A.1 of the Plan and proposes to make a clarifying technical change to Section VIII.A.3 of the Plan. The Third Amendment was published for comment in the **Federal Register** on March 12, 2013.[4] The Commission received one comment letter in response to the Notice.[5] This order approves the Third Amendment to the Plan.

II. Description of the Proposal

A. Purpose of the Plan

The Participants filed the Plan in order to create a market-wide limit up-limit down mechanism that is intended to address extraordinary market volatility in ''NMS Stocks,'' as defined in Rule 600(b)(47) of Regulation NMS under the Act.[6] The Plan sets forth procedures that provide for market-wide limit up-limit down requirements that would be designed to prevent trades in individual NMS Stocks from occurring outside of the specified price bands.[7] These limit up-limit down requirements would be coupled with Trading Pauses, as defined in Section I(Y) of the Plan, to accommodate more fundamental price moves (as opposed to erroneous trades or momentary gaps in liquidity).

As set forth in Section V of the Plan, the price bands would consist of a Lower Price Band and an Upper Price Band for each NMS Stock.[8] The price bands would be calculated by the Securities Information Processors (''SIPs'' or ''Processors'') responsible for consolidation of information for an

[1] 15 U.S.C. 78k–1.

[2] 17 CFR 242.608.

[3] *See* Letter from Janet M. McGinness, Executive Vice President & Corporate Secretary, NYSE Euronext, to Elizabeth M. Murphy, Secretary, Commission, dated February 19, 2013 (''Transmittal Letter'').

[4] *See* Securities Exchange Act Release No. 69062 (March 7, 2013), 78 FR 15757 (''Notice'').

[5] *See* Letter from Manisha Kimmel, Executive Director, Financial Information Forum, to Elizabeth M. Murphy, Secretary, Commission, dated March 22, 2013 (''FIF Letter'').

[6] 17 CFR 242.600(b)(47). *See also* Section I(H) of the Plan.

[7] *See* Section V of the Plan.

[8] Capitalized terms used herein but not otherwise defined shall have the meaning ascribed to such terms in the Plan.

NMS Stock pursuant to Rule 603(b) of Regulation NMS under the Act.[9] Those price bands would be based on a Reference Price [10] for each NMS Stock that equals the arithmetic mean price of Eligible Reported Transactions for the NMS Stock over the immediately preceding five-minute period. The price bands for an NMS Stock would be calculated by applying the Percentage Parameter for such NMS Stock to the Reference Price, with the Lower Price Band being a Percentage Parameter [11] below the Reference Price, and the Upper Price Band being a Percentage Parameter above the Reference Price. Between 9:30 a.m. and 9:45 a.m. ET and 3:35 p.m. and 4:00 p.m. ET, the price bands would be calculated by applying double the Percentage Parameters as set forth in Appendix A of the Plan.

The Processors would also calculate a Pro-Forma Reference Price for each NMS Stock on a continuous basis during Regular Trading Hours. If a Pro-Forma Reference Price did not move by one percent or more from the Reference Price in effect, no new price bands would be disseminated, and the current Reference Price would remain the effective Reference Price. If the Pro-Forma Reference Price moved by one percent or more from the Reference Price in effect, the Pro-Forma Reference Price would become the Reference Price, and the Processors would disseminate new price bands based on the new Reference Price. Each new Reference Price would remain in effect for at least 30 seconds.

When one side of the market for an individual security is outside the applicable price band, the Processors would be required to disseminate such National Best Bid [12] or National Best Offer [13] with an appropriate flag identifying it as non-executable. When the other side of the market reaches the applicable price band, the market for an individual security would enter a Limit State,[14] and the Processors would be required to disseminate such National Best Offer or National Best Bid with an appropriate flag identifying it as a Limit State Quotation.[15] All trading would immediately enter a Limit State if the National Best Offer equals the Lower Limit Band and does not cross the National Best Bid, or the National Best Bid equals the Upper Limit Band and does not cross the National Best Offer. Trading for an NMS Stock would exit a Limit State if, within 15 seconds of entering the Limit State, all Limit State Quotations were executed or canceled in their entirety. If the market did not exit a Limit State within 15 seconds, then the Primary Listing Exchange would declare a five-minute trading pause, which would be applicable to all markets trading the security.

These limit up-limit down requirements would be coupled with trading pauses [16] to accommodate more fundamental price moves (as opposed to erroneous trades or momentary gaps in liquidity). As set forth in more detail in the Plan, all trading centers [17] in NMS Stocks, including both those operated by Participants and those operated by members of Participants, would be required to establish, maintain, and enforce written policies and procedures that are reasonably designed to comply with the limit up-limit down and trading pause requirements specified in the Plan.

Under the Plan, all trading centers would be required to establish, maintain, and enforce written policies and procedures reasonably designed to prevent the display of offers below the Lower Price Band and bids above the Upper Price Band for an NMS Stock. The Processors would disseminate an offer below the Lower Price Band or bid above the Upper Price Band that nevertheless inadvertently may be submitted despite such reasonable policies and procedures, but with an appropriate flag identifying it as non-executable; such bid or offer would not be included in National Best Bid or National Best Offer calculations. In addition, all trading centers would be required to develop, maintain, and enforce policies and procedures reasonably designed to prevent trades at prices outside the price bands, with the exception of single-priced opening, reopening, and closing transactions on the Primary Listing Exchange.

As stated by the Participants in the Plan, the limit up-limit down mechanism is intended to reduce the negative impacts of sudden, unanticipated price movements in NMS Stocks,[18] thereby protecting investors and promoting a fair and orderly market.[19] In particular, the Plan is designed to address the type of sudden price movements that the market experienced on the afternoon of May 6, 2010.[20] The initial date of Plan operations is April 8, 2013.[21]

B. Third Amendment to the Plan

The Third Amendment proposed two changes to the Plan. First, the Participants propose to amend Section VI.A.1 of the Plan to clarify that odd-lot sized transactions are not exempt from the limitation on trades provision of Section VI.A.1.[22] This provision requires trading centers in NMS stocks to establish, maintain, and enforce written policies and procedures that are reasonably designed to prevent trades at prices that are below the Lower Price Band or above the Upper Price Band for an NMS stock. The Participants stated that they believe that odd-lot sized transactions should benefit from the protections of the Plan. Second, the Participants propose to amend Section VIII.A.3 of the Plan to clarify that during Phase I of implementation no price bands shall be calculated and disseminated and therefore trading shall not enter a Limit State less than 30

[9] 17 CFR 242.603(b). The Plan refers to this entity as the Processor.

[10] *See* Section I(T) of the Plan.

[11] As initially proposed by the Participants, the Percentage Parameters for Tier 1 NMS Stocks (*i.e.,* stocks in the S&P 500 Index or Russell 1000 Index and certain ETPs) with a Reference Price of $1.00 or more would be five percent and less than $1.00 would be the lesser of (a) $0.15 or (b) 75 percent. The Percentage Parameters for Tier 2 NMS Stocks (*i.e.,* all NMS Stocks other than those in Tier 1) with a Reference Price of $1.00 or more would be 10 percent and less than $1.00 would be the lesser of (a) $0.15 or (b) 75 percent. The Percentage Parameters for a Tier 2 NMS Stock that is a leveraged ETP would be the applicable Percentage Parameter set forth above multiplied by the leverage ratio of such product. On May 24, 2012, the Participants amended the Plan to create a 20% price band for Tier 1 and Tier 2 stocks with a Reference Price of $0.75 or more and up to and including $3.00. The Percentage Parameter for stocks with a Reference Price below $0.75 would be the lesser of (a) $0.15 or (b) 75 percent. *See* Letter from Janet M. McGinness, Senior Vice President, Legal and Corporate Secretary, NYSE Euronext, to Elizabeth M. Murphy, Secretary, Commission, dated May 24, 2012.

[12] 17 CFR 242.600(b)(42). *See also* Section I(G) of the Plan.

[13] *Id.*

[14] A stock enters the Limit State if the National Best Offer equals the Lower Price Band and does not cross the National Best Bid, or the National Best Bid equals the Upper Price Band and does not cross the National Best Offer. *See* Section VI(B) of the Plan.

[15] *See* Section I(D) of the Plan.

[16] The primary listing market would declare a trading pause in an NMS Stock; upon notification by the primary listing market, the Processor would disseminate this information to the public. No trades in that NMS Stock could occur during the trading pause, but all bids and offers may be displayed. *See* Section VII(A) of the Plan.

[17] As defined in Section I(X) of the Plan, a trading center shall have the meaning provided in Rule 600(b)(78) of Regulation NMS under the Act.

[18] 17 CFR 242.600(b)(47).

[19] *See* Transmittal Letter, *supra* note 3.

[20] The limit up-limit down mechanism set forth in the Plan would replace the existing single-stock circuit breaker pilot. *See e.g.,* Securities Exchange Act Release Nos. 62251 (June 10, 2010), 75 FR 34183 (June 16, 2010) (SR–FINRA–2010–025); 62883 (September 10, 2010), 75 FR 56608 (September 16, 2010) (SR–FINRA–2010–033).

[21] *See* Securities Exchange Act Release No. 68953 (February 20, 2013), 78 FR 13113 (February 26, 2013).

[22] The Commission notes that the Plan provisions regarding Trading Pauses apply to all trading in NMS Stocks, including odd-lot transactions.

minutes before the end of Regular Trading Hours. The Participants stated that the proposed change is designed to reduce confusion by correcting language in the Plan.

III. Comment Letter

The Commission received one comment letter in favor of the Third Amendment to the Plan.[23] The commenter stated that the proposed changes were raised since September 2012 in discussions that the commenter had with the Participants and that it had the understanding that amendments would be filed with the Commission to address these concerns. As such, market participants have programed their systems accordingly well in advance of the April 8, 2013 implantation date of the Plan.

The commenter further stated that one of the key drivers of the Plan is the protection of retail investors.[24] Thus, having odd-lots incorporated at the commencement of the rule is critical. Moreover, the commenter stated that the implementation of the Plan has evolved into a very complex process and it would prefer that odd-lots not be implemented on a different schedule possibly causing investor confusion.

IV. Discussion and Commission Findings

After careful review, the Commission finds that Third Amendment is consistent with the requirements of the Act and the rules and regulations thereunder.[25] Specifically, the Commission finds that the Third Amendment is consistent with Section 11A of the Act [26] and Rule 608 thereunder [27] in that it is appropriate in the public interest, for the protection of investors and the maintenance of fair and orderly markets, and to remove impediments to, and perfect the mechanism of, a national market system.

The Third Amendment would make two changes to the Plan. The first change amends the Plan to specify that odd-lot transactions will be subject to the limitation on trades provision of Section VI.A.1. As such, the requirement that trading centers in NMS stocks establish, maintain, and enforce written policies and procedures that are reasonably designed to prevent trades at prices that are below the Lower Price Band or above the Upper Price Band for an NMS stock will apply to odd-lot transactions. The Commission notes that this change could reduce the ability of market participants to engage in odd-lot transactions to circumvent the requirements of the Plan, thereby further protecting investors. The Commission also notes that the change is widely anticipated and supported in the industry, as it would reduce compliance burdens because firms would not need to code specially for odd lots.[28]

The second change would reconcile an inconsistency in the current rule text of the Plan. The current language states that the price bands shall not be calculated and disseminated less than 30 minutes before the end of the trading day, and that trading shall not enter a Limit State less than 25 minutes before the end of the trading day. Under this formulation, there would be no price bands after 3:30 p.m. ET, although a stock could still enter a Limit State until 3:35 p.m. ET. This is internally inconsistent, since the price bands must be calculated and disseminated in order for the Limit State to be triggered. The Participants proposed to amend the Plan to state that no price bands shall be calculated and disseminated and, therefore, trading shall not enter a Limit State, less than 30 minutes before the end of the trading day. The Commission believes that this change provides further clarity on the operation of the limit up-limit down mechanism during Phase I of the Plan.

Therefore, the Commission believes that the Third Amendment to the Plan is consistent with Section 11A of the Act [29] and Rule 608 thereunder.[30]

V. Conclusion

It is therefore ordered, pursuant to Section 11A of the Act [31] and Rule 608 thereunder,[32] that the Third Amendment to the Plan (File No. 4–631) be, and it hereby is, approved.

For the Commission, by the Division of Trading and Markets, pursuant to delegated authority.[33]

Kevin M. O'Neill,

Deputy Secretary.

[FR Doc. 2013–08249 Filed 4–9–13; 8:45 am]

BILLING CODE 8011–01–P

[23] *See* FIF Letter, *supra* note 5.

[24] *Id.*

[25] In approving the Third Amendment, the Commission has considered its impact on efficiency, competition, and capital formation. 15 U.S.C. 78c(f).

[26] 15 U.S.C. 78k–1.

[27] 17 CFR 242.608.

[28] *See* FIF Letter.

[29] 15 U.S.C. 78k–1.

[30] 17 CFR 242.608.

[31] 15 U.S.C. 78k–1.

[32] 17 CFR 242.608.

[33] 17 CFR 200.30–3(a)(29).

SECURITIES AND EXCHANGE COMMISSION

[Release No. 34–69296; File No. SR–NSX–2013–12]

Self-Regulatory Organizations; National Stock Exchange, Inc.; Notice of Filing and Immediate Effectiveness of Proposed Rule Change To Amend its Rule 11.24, Limit Up/Limit Down

April 4, 2013.

Pursuant to Section 19(b)(1) of the Securities Exchange Act of 1934 (the ''Act'' or ''Exchange Act'') [1] and Rule 19b–4 thereunder,[2] notice is hereby given that on April 3, 2013, National Stock Exchange, Inc. (''NSX®'' or the ''Exchange'') filed with the Securities and Exchange Commission (''Commission'') the proposed rule change, as described in Items I and II below, which Items have been prepared by the Exchange. The Commission is publishing this notice to solicit comment on the proposed rule change from interested persons.

I. Self-Regulatory Organization's Statement of the Terms of Substance of the Proposed Rule Change

The Exchange proposes to amend Rule 11.24(k) regarding routing of orders under the National Market System Plan established pursuant to Rule 608 of the Exchange Act, to address extraordinary market volatility (the ''Regulation NMS Plan to Address Extraordinary Market Volatility'' or ''Plan''),[3] also known as Limit Up/Limit Down. The Exchange has designated this proposal as non-controversial and provided the Commission with the notice required by Rule 19b–4(f)(6)(iii) under the Act.[4]

The text of the proposed rule change is available on the Exchange's Web site at *http://www.nsx.com,* at the principal office of the Exchange, on the Commission's Web site at *http://www.sec.gov*, and at the Commission's Public Reference Room.

II. Self-Regulatory Organization's Statement of the Purpose of, and Statutory Basis for, the Proposed Rule Change

In its filing with the Commission, the Exchange included statements concerning the purpose of and basis for the proposed rule change and discussed any comments it received on the proposed rule change. The text of these statements may be examined at the

[1] 15 U.S.C. 78s(b)(1).

[2] 17 CFR 240.19b–4.

[3] *See* Appendix A to Securities Exchange Act Release No. 67091 (May 31, 2012) 77 FR 33498 (June 6, 2012).

[4] 17 CFR 240.19b–4(f)(6)(iii).

places specified in Item IV below. The Exchange has prepared summaries, set forth in sections A, B, and C below, of the most significant parts of such statements.

A. Self-Regulatory Organization's Statement of the Purpose of, and Statutory Basis for, the Proposed Rule Change

1. Purpose

Since May 6, 2010, when the markets experienced excessive volatility in an abbreviated time period, *i.e.,* the ''flash crash,'' the national securities exchanges that list and trade equity securities and the Financial Industry Regulatory Authority (''FINRA'') have implemented market-wide measures that are designed to restore investor confidence in the markets by reducing the potential for excessive volatility. The measures adopted include pilot plans for stock-by-stock trading pauses [5] and related changes to the equities market clearly erroneous execution rules,[6] and more stringent equity market maker quoting requirements.[7] On May 31, 2012, the Commission approved the Plan, on a pilot basis.[8] On March 8, 2013, the Commission published the Exchange's proposed rule change to comply with the Plan, which is to become operative on April 8, 2013.[9]

The Plan is designed to prevent trades in NMS Stocks from occurring outside of specified Price Bands.[10] Price Bands consisting of a Lower Price Band and an Upper Price Band for each NMS Stock are calculated by the Processors.[11] The Price Bands are coupled with Trading Pauses to accommodate more fundamental price moves. All trading centers in NMS Stocks, including both those operated by Participants and those operated by members of Participants, are required to establish, maintain, and enforce written policies and procedures that are reasonably designed to comply with the requirements specified in the Plan.[12]

In sum, Exchange Rule 11.24, Limit Up-Limit Down, addresses the treatment of certain orders to prevent executions outside the Price Bands.[13] The Exchange proposes to amend Rule 11.24(k) in order to explain how the Exchange will route orders under the Plan. Rule 11.24(k) currently states that the Exchange will route orders to an away market in accordance with Rule 11.15(a)(ii) *regardless* of whether the away market is displaying a sell (buy) quote that is above (below) the Upper (Lower) Price Band. The Exchange now proposes to not route an order unless an away market is displaying trading interest at or within the Price Bands. As amended, Rule 11.24(k) will state that the Exchange will not route an order unless an away market is displaying a sell (buy) quote that is at or below (above) the Upper (Lower) Price Band.[14] The Exchange believes that this provision is reasonably designed to prevent an execution from occurring outside the Price Bands in a manner that promotes compliance with the Limit Up-Limit Down and Trading Pause requirements specified in the Plan. This approach is also consistent with that of other exchanges, including the New York Stock Exchange, Inc. (''NYSE'') [15] and EDGA Exchange, Inc. (''EDGA'').[16]

2. Statutory Basis

The Exchange believes the proposed rule change is consistent with the requirements of Section 6(b) of the Exchange Act.[17] In addition, the rule furthers the objective of Section 6(b)(5) of the Exchange Act [18] by promoting just and equitable principles of trade, removing impediments to, and perfecting the mechanisms of, a free and open national market system while protecting investors and the public interest. The proposal furthers these causes by ensuring that orders in NMS Stocks are not routed to other away markets where an execution may occur outside the Price Bands, and thereby is reasonably designed to prevent an execution outside the Price Bands in a manner that promotes compliance with the Limit Up-Limit Down and Trading Pause requirements specified in the Plan.

B. Self-Regulatory Organization's Statement on Burden on Competition

The Exchange does not believe that the proposed rule change will impose any burden on competition that is not necessary or appropriate in furtherance of the purposes of the Act. All national securities exchanges are required to establish, maintain, and enforce policies and procedures reasonably designed to comply with the requirements of the Plan. Every member of those exchanges, including ETP Holders of the Exchange, are subject to those procedures and prevented from executing an order in an NMS Stock outside of the Price Bands prescribed by the Plan. Therefore, the Exchange believes the proposed rule change does not impose any burden on competition that is not necessary or appropriate in furtherance of the purposes of the Act.

C. Self-Regulatory Organization's Statement on Comments on the Proposed Rule Change Received From Members, Participants, or Others

Written comments on the proposed rule change were neither solicited nor received.

III. Date of Effectiveness of the Proposed Rule Change and Timing for Commission Action

The Exchange has filed the proposed rule change pursuant to Section 19(b)(3)(A)(iii) of the Act [19] and Rule 19b–4(f)(6) thereunder.[20] Because the proposed rule change does not: (i) Significantly affect the protection of investors or the public interest; (ii) impose any significant burden on competition; and (iii) become operative prior to 30 days from the date on which it was filed, or such shorter time as the Commission may designate, if consistent with the protection of investors and the public interest, the proposed rule change has become effective pursuant to Section 19(b)(3)(A) of the Act and Rule 19b–4(f)(6)(iii) thereunder.

A proposed rule change filed under Rule 19b–4(f)(6) [21] normally does not become operative prior to 30 days after

[5] *See e.g.,* NSX Rule 11.20B.

[6] *See e.g.,* NSX Rule 11.19.

[7] *See e.g.,* NSX Rule 11.8(a)(1)(B)(iv) and (v).

[8] *See* Securities Exchange Act Release No. 67091 (May 31, 2012) 77 FR 33498 (June 6, 2012) (Order approving, on a Pilot Basis, the National Market System Plan to Address Extraordinary Market Activity).

[9] *See* Securities Exchange Act Release No. 69087 (March 8, 2013), 78 FR 16325 (March 14, 2012) (SR–NSX–2013–09)

[10] Unless otherwise specified, capitalized terms used in this rule filing are based on defined terms in the Plan.

[11] *See* Section V(A) of the Plan.

[12] The Exchange is a Participant in the Plan.

[13] *See supra* note 9.

[14] Under NSX Rule 11.15(a)(iii), unless the terms of the order direct otherwise, any order not executed in full on the Exchange which is not eligible for routing away (e.g,, no away market is displaying a sell (buy) quote that is at or below (above) the Upper (Lower) Price Band), or which is not executed in full when routed away, will be ranked in the NSX Book in accordance with the order priority rules under NSX Rule 11.14 and eligible for execution in accordance with NSX Rule 11.15.

[15] *See* Securities Exchange Act Release No. 68876 (February 8, 2013), 78 FR 10643 (February 14, 2013) (SR–NYSE–2013–09).

[16] *See* Securities Exchange Act Release No. 69002 (February 27, 2013), 78 FR 14394 (March 5, 2013) (SR–EDGA–2013–08).

[17] 15 U.S.C. 78f(b).

[18] 15 U.S.C 78f(b)(5).

[19] 15 U.S.C. 78s(b)(3)(A)(iii).

[20] 17 CFR 240.19b–4(f)(6). In addition, Rule 19b–4(f)(6) requires the Exchange to give the Commission written notice of the Exchange's intent to file the proposed rule change, along with a brief description and text of the proposed rule change, at least five business days prior to the date of filing of the proposed rule change, or such shorter time as designated by the Commission. The Exchange has satisfied this requirement.

[21] 17 CFR 240.19b–4(f)(6).

the date of the filing. However, pursuant to Rule 19b–4(f)(6)(iii),[22] the Commission may designate a shorter time if such action is consistent with the protection of investors and the public interest. The Exchange has asked the Commission to waive the 30-day operative delay. The Commission believes that waiving the operative delay and designating April 8, 2013 as the operative date of the proposed rule change is consistent with the protection of investors and the public interest because such waiver would allow the proposed rule change to be operative on the initial date of Plan operations. Accordingly, the Commission hereby grants the Exchange's request and designates an operative date of April 8, 2013.[23]

At any time within 60 days of the filing of such proposed rule change, the Commission summarily may temporarily suspend such rule change if it appears to the Commission that such action is necessary or appropriate in the public interest, for the protection of investors, or otherwise in furtherance of the purposes of the Act.

IV. Solicitation of Comments

Interested persons are invited to submit written data, views, and arguments concerning the foregoing, including whether the proposed rule change is consistent with the Act. Comments may be submitted by any of the following methods:

Electronic Comments

- Use the Commission's Internet comment form (*http://www.sec.gov/rules/sro.shtml*); or
- Send an email to *rule-comments@sec.gov*. Please include File Number SR–NSX–2013–12 on the subject line.

Paper Comments

- Send paper comments in triplicate to Elizabeth M. Murphy, Secretary, Securities and Exchange Commission, 100 F Street NE., Washington, DC 20549–1090.

All submissions should refer to File Number SR–NSX–2013–12. This file number should be included on the subject line if email is used. To help the Commission process and review your comments more efficiently, please use only one method. The Commission will post all comments on the Commission's Internet Web site (*http://www.sec.gov/rules/sro.shtml*). Copies of the submission, all subsequent amendments, all written statements with respect to the proposed rule change that are filed with the Commission, and all written communications relating to the proposed rule change between the Commission and any person, other than those that may be withheld from the public in accordance with the provisions of 5 U.S.C. 552, will be available for Web site viewing and printing in the Commission's Public Reference Room, 100 F Street NE., Washington, DC 20549, on official business days between the hours of 10:00 a.m. and 3:00 p.m. Copies of such filing also will be available for inspection and copying at the principal office of the Exchange. All comments received will be posted without change; the Commission does not edit personal identifying information from submissions. You should submit only information that you wish to make publicly available. All submissions should refer to File Number SR–NSX–2013–12 and should be submitted on or before May 1, 2013.

For the Commission, by the Division of Trading and Markets, pursuant to delegated authority.[24]

Kevin M. O'Neill,

Deputy Secretary.

[FR Doc. 2013–08322 Filed 4–9–13; 8:45 am]

BILLING CODE 8011–01–P

[22] 17 CFR 240.19b–4(f)(6)(iii).

[23] For purposes only of waiving the operative delay, the Commission has considered the proposed rule's impact on efficiency, competition, and capital formation. *See* 15 U.S.C. 78c(f).

[24] 17 CFR 200.30–3(a)(12).

SECURITIES AND EXCHANGE COMMISSION

[Release No. 34–69313; File No. SR–NSCC–2013–02]

Self-Regulatory Organizations; National Securities Clearing Corporation; Notice of Filing of Proposed Rule Change To Institute Supplemental Liquidity Deposits to Its Clearing Fund Designed To Increase Liquidity Resources To Meet Its Liquidity Needs

April 4, 2013.

Pursuant to Section 19(b)(1) of the Securities Exchange Act of 1934 (''Act'')[1] and Rule 19b–4 thereunder,[2] notice is hereby given that on March 21, 2013, National Securities Clearing Corporation (''NSCC'') filed with the Securities and Exchange Commission (''Commission'') the proposed rule change as described in Items I, II and III below, which Items have been prepared primarily by NSCC. The Commission is publishing this notice to solicit comments on the proposed rule change from interested persons.

I. Clearing Agency's Statement of the Terms of Substance of the Proposed Rule Change

To enhance its ability to meet its liquidity requirements, NSCC is proposing to amend its Rules & Procedures (''Rules'') to provide for a supplemental liquidity funding obligation, as described below.

II. Clearing Agency's Statement of the Purpose of, and Statutory Basis for, the Proposed Rule Change

In its filing with the Commission, NSCC included statements concerning the purpose of and basis for the proposed rule change and discussed any comments it received on the proposed rule change. The text of these statements may be examined at the places specified in Item IV below. NSCC has prepared summaries, set forth in sections (A), (B), and (C) below, of the most significant aspects of these statements.[3]

(A) Self-Regulatory Organization's Statement of the Purpose of, and Statutory Basis for, the Proposed Rule Change

Proposal Overview

As a central counterparty (''CCP''), NSCC occupies an important role in the securities settlement system by interposing itself between counterparties to financial transactions, thereby reducing the risk faced by its Members and contributing to global financial stability. Further, pursuant to the Payment, Clearing, and Settlement Supervision Act of 2010 (''Clearing Supervision Act''),[4] NSCC has been designated a systemically important financial market utility (''SFMU'') by the Financial Stability Oversight Council, obliging NSCC to meet certain risk management regulatory standards related to, among other things, maintaining adequate financial resources to meet its obligations to its Members in the event of the default of the Member or family of affiliated Members (''Affiliated Family'') that would generate the largest aggregate payment obligation to NSCC in stressed conditions. In this regard and to enhance its ability to meet its liquidity requirements, NSCC is proposing to amend its Rules to provide for a

[1] 15 U.S.C. 78s(b)(1). Defined terms that are not defined in this notice are defined in Exhibit 5 of the proposed rule change filing, available at *http://www.sec.gov/rules/sro/nscc.shtml* under File No. SR–NSCC–2013–02, Additional Materials.

[2] 17 CFR 240.19b–4.

[3] The Commission has modified the text of the summaries prepared by NSCC.

[4] 12 U.S.C. 5465(e)(1).

supplemental liquidity funding obligation.

A substantial proportion of the liquidity needed by NSCC is attributable to the exposure presented by those unaffiliated Members and Affiliated Families that regularly incur the largest gross settlement debits over a settlement cycle during trading activity on business days other than periods coinciding with quarterly triple options expiration dates (''Regular Activity Periods''), as well as during times of increased trading activity that arise around quarterly triple options expiration dates (''Options Expiration Activity Periods'').

With the goal of ensuring that NSCC has sufficient liquidity to meet its obligations during Regular Activity Periods, as well as during Options Expiration Activity Periods, it is appropriate that those unaffiliated Members and Affiliated Families provide additional liquidity to NSCC. Under proposed Rule 4(A), this will take the form of supplemental liquidity deposits to the Clearing Fund (i) in an amount based on the largest liquidity need NSCC would have in the event of the default of an unaffiliated Member or Affiliated Family during a Regular Activity Period (''Regular Activity Supplemental Deposit''), and (ii) an additional amount to cover the largest liquidity need NSCC would have in the event of the default of an unaffiliated Member or Affiliated Family during an Options Expiration Activity Period (''Special Activity Supplemental Deposit'') (collectively with Regular Activity Supplemental Deposit, ''Supplemental Deposit'').

The obligation of an unaffiliated Member or the Members of an Affiliated Family to make a Regular Activity Supplemental Deposit (''Regular Activity Liquidity Obligation'') or a Special Activity Supplemental Deposit (''Special Activity Liquidity Obligation'') would be imposed on the thirty (30) unaffiliated Members and/or Affiliated Families who generate the largest aggregate liquidity needs over a settlement cycle that would apply in the event of a closeout (i.e., over a period from date of default through the following three (3) settlement days), based upon a lookback period. The Regular Activity Liquidity Obligation of an unaffiliated Member or the Members of an Affiliated Family to make a Regular Activity Supplemental Deposit will be reduced by any liquidity such Members or their affiliates may provide in the form of commitments under NSCC's committed liquidity facility (''Credit Facility'').

The calculations for both the Regular Activity Liquidity Obligation and the Special Activity Liquidity Obligation are designed so that NSCC has adequate liquidity resources to enable it to settle transactions, notwithstanding the default of an unaffiliated Member and/or Affiliated Family during Regular Activity Periods, as well as during Options Expiration Activity Periods. The Liquidity Obligations imposed on Affiliated Families would be allocated among the Family Members in proportion to the liquidity risk (or peak exposure) they present to NSCC.

Regulatory Background

As both a CCP and a designated SFMU, NSCC adheres to strict risk management processes that are regularly reviewed against applicable regulatory and industry standards. This includes the securities laws and rulemaking promulgated by the Commission, such as Rule 17Ad-22(b)(3), which requires registered clearing agencies to maintain sufficient financial resources to withstand, at a minimum, a default by the participant (defined in Rule 17Ad-22(a)(3) to include a participant family) to which it has the largest exposure.

NSCC is also mindful of the standards set forth in the Principles for Financial Market Infrastructures (''PFMI'') of the Committee on Payment and Settlement Systems and the Technical Committee of the International Organization of Securities Commissions. Key Consideration 4 of PFMI Principle 7, addressing liquidity risk, provides that a CCP should maintain sufficient liquidity resources to meet its payment obligations under a wide range of stress scenarios including the default of the participant and its affiliates that would generate the largest aggregate payment obligation to the CCP.

NSCC believes the proposed rule change should assist NSCC in securing adequate liquidity resources to meet its settlement obligations during both Regular Activity Periods and Options Expiration Activity Periods, notwithstanding the default of one of its unaffiliated Members and/or Affiliated Families that pose the largest aggregate liquidity need over the four day settlement cycle.

Supplemental Liquidity Providers

Every business day NSCC measures the liquidity obligations of its unaffiliated Members and Affiliated Families by taking the sum of their purchase obligations on that day in securities that are eligible for processing in NSCC's Continuous Net Settlement (''CNS'') system and for the following three (3) settlement days (which equates to the period from the date of default through the remaining settlement cycle). NSCC then takes into account certain adjustments, assumptions and offsets, and assumes the occurrence of certain stressed conditions.

The stressed market conditions NSCC assumes in this calculation include, but are not limited to, (i) the simultaneous default, without prior warning, of all Members of the Affiliated Family with the largest aggregate four (4) day settlement obligations; (ii) that on the day of such default, the Members of such Affiliated Family are trading at peak historical trading levels and no market participants curtail their activity with any Members of the Family; and (iii) leading up to or after the default, there is no increased volatility in the market that would result in a significant increase in Clearing Fund requirements, mark-to-market collections, or other risk-based premiums that would have the result of increasing NSCC's liquidity resources. NSCC believes that these conditions simulate the impact of significant credit risk and market risk stresses on NSCC's liquidity need across both Regular Activity Periods and Options Expiration Activity Periods.

NSCC then identifies the largest Member liquidity need on each day and determines if the available liquidity resources, consisting of the aggregate Required Deposits, any Supplemental Deposits, and any Prefund Deposits in the Clearing Fund on the day the liquidity need was observed, are adequate to cover that liquidity need, or if there is a calculated liquidity shortfall under the assumed stressed market conditions described above.

The Regular Activity Supplemental Deposits will be calculated to address those daily liquidity shortfalls that fall on any business day included in a Regular Activity Period (''Regular Activity Supplemental Liquidity Need''), and the Special Activity Supplemental Deposits will be calculated to address those additional daily liquidity shortfalls that fall on any business day included in an Options Expiration Activity Period (''Special Activity Supplemental Liquidity Need'').

Regular Activity Supplemental Deposits

Under this proposal, every six (6) months, NSCC will determine (i) its largest Regular Activity Supplemental Liquidity Need (''Regular Activity Peak Liquidity Need'') over the preceding twelve (12) month period and (ii) those unaffiliated Members and Affiliated Families that presented the largest aggregate liquidity exposures to NSCC over the preceding six-month period. NSCC will then rank the aggregate liquidity exposures presented by the

unaffiliated Members and/or Affiliated Families (''Regular Activity Peak Liquidity Exposures'') during the lookback period to determine which thirty (30) such unaffiliated Members and Affiliated Families presented the largest respective Regular Activity Peak Liquidity Exposures within the lookback period. NSCC's Regular Activity Peak Liquidity Need will then be allocated to these thirty (30) unaffiliated Members and Affiliated Families (''Regular Activity Liquidity Providers''), in proportion to the Regular Activity Peak Liquidity Exposures they presented to NSCC during the lookback period.

The first of these semi-annual calculations of the Regular Activity Liquidity Obligations will be made to coincide with NSCC's annual renewal of the Credit Facility each year (''Regular Activity First Tranche Liquidity Obligations'') and the second calculation each year will be made six (6) months thereafter (''Regular Activity Second Tranche Liquidity Obligations'').

Special Activity Supplemental Deposits

Special Activity Supplemental Deposits are deposits made in addition to Regular Activity Supplemental Deposits, designed to cover the additional liquidity exposure that occurs over an Options Expiration Activity Period. Each calendar quarter, on a day that is no later than the fifth business day preceding any Options Expiration Activity Period, NSCC will also determine (i) its largest Special Activity Supplemental Liquidity Need (''Special Activity Peak Liquidity Need'') over the preceding twenty-four (24) months (i.e., the eight prior Options Expiration Activity Periods, or a longer lookback period as determined by NSCC) and (ii) those unaffiliated Members and Affiliated Families that presented the largest aggregate Special Activity liquidity exposures to NSCC over the same period. NSCC will then rank the aggregate Special Activity liquidity exposures presented by such unaffiliated Members and/or Affiliated Families (referred to as their respective ''Special Activity Peak Liquidity Exposures'') during the lookback period to determine which thirty (30) such unaffiliated Members and Affiliated Families presented the largest respective Special Activity Peak Liquidity Exposures within the lookback period. NSCC's Special Activity Supplemental Peak Need will then be allocated to these thirty (30) Members and Affiliated Families (''Special Activity Liquidity Providers''), in proportion to the Special Activity Peak Liquidity Exposures they presented to NSCC during the lookback period.

Interim Adjustments and Calls

With the goal of ensuring that NSCC's liquidity resources remain adequate between the specified calculation dates, if either current liquidity needs increase significantly over those liquidity needs used for the regular calculations (or Special Activity Calculations), or the amount of liquidity resources is significantly reduced, the proposal permits NSCC to make interim recalibrations and liquidity calls: if between the semi-annual calculations of the Regular Activity Liquidity Obligations, the aggregate amount of Regular Activity Supplemental Deposits decreases by an amount that exceeds a threshold as determined by NSCC (whether as a result of the retirement of Members, a cease to act, or otherwise), then NSCC will recalculate its Regular Activity Peak Liquidity Need and allocate it among the unaffiliated Members and Affiliated Families that then comprise the applicable thirty (30) largest Regular Activity Liquidity Providers, in the same manner such calculations and allocations would be made at each semi-annual calculation of Regular Activity Liquidity Obligations.[5]

Conversely, if on any business day between regular semi-annual calculation dates NSCC observes an increase in its Regular Activity Liquidity Needs that exceeds a predetermined threshold amount, or between the dates on which it calculates Special Activity Liquidity Obligations it observes an increase in its Special Activity Liquidity Needs that exceeds a predetermined threshold amount, NSCC shall be entitled to call for an additional deposit from the Member whose increase in activity levels caused (or was the primary cause of) such increased liquidity need (''Liquidity Call''). Liquidity Call amounts will be treated as a part of that Member's Regular Activity Supplemental Deposit or Special Activity Supplemental Deposit, as applicable.

Operation of the Funding Obligation

Each Regular Activity Liquidity Provider will be obligated to contribute to the Clearing Fund, no later than five (5) business days following the effective date of the renewal of the Credit Facility, the amount of its Regular Activity Liquidity Obligation, reduced (i) dollar for dollar by amounts committed to the Credit Facility by that Regular Activity Liquidity Provider or its affiliates, and (ii) ratably (among all Regular Activity Liquidity Providers) by amounts committed to the Credit Facility by the lenders party thereto which are not Members or their affiliates.

If the amount of the Regular Activity Second Tranche Liquidity Obligation of an unaffiliated Member or Affiliated Family exceeds its Regular Activity First Tranche Liquidity Obligation (including because the unaffiliated Member or Affiliated Family had no Regular Activity First Tranche Liquidity Obligation), such Regular Activity Liquidity Provider will be obligated to contribute its calculated amount within three (3) business days following the final notice of such amount. If the Regular Activity Second Tranche Liquidity Obligation of an unaffiliated Member or Affiliated Family is less than its Regular Activity First Tranche Liquidity Obligation, then it shall be entitled to a refund of the amount of the difference, provided, that nothing shall reduce or in any way affect any commitment or other obligation of any Member or its affiliate under the Credit Facility.

Promptly after calculation of the Special Activity Liquidity Obligations, NSCC will inform Special Activity Liquidity Providers of their Special Activity Liquidity Obligations, and those Special Activity Liquidity Providers must make their Special Activity Supplemental Deposits to the Clearing Fund in cash no later than the close of business on the second business day preceding the applicable Options Expiration Activity Period (i.e., generally the Wednesday before the options expiration date).

However, if a Special Activity Liquidity Provider anticipates that its Special Activity Peak Liquidity Exposure at any time during an Options Expiration Activity Period will be greater than the amount calculated by NSCC, it may, no later than the first business day of that Options Expiration Activity Period, make an additional cash deposit to the Clearing Fund that is in excess of its Required Deposit and is designated as a ''Special Activity Prefund Deposit.'' Members may also, at their discretion, deposit to the Clearing Fund amounts in excess of their Required Deposit that are designated ''Regular Activity Prefund Deposits.'' Because Prefund Deposits are included in calculating available liquidity resources, they thus reduce NSCC's Supplemental Liquidity Needs, as well as the depositing Member's Regular

[5] NSCC plans to use an interim date calculation as the first calculation under the proposed rule, should it become effective on a date after the effective date of the 2013 renewal of its Credit Facility.

Activity (or Special Activity) Peak Liquidity Exposure.

As noted above under ''Interim Adjustments and Calls,'' to the extent that NSCC observes a peak shortfall that breaches predetermined thresholds at any time throughout the year, the amount of the shortfall will be allocated solely to the Member responsible for the activity that caused the shortfall. The liquidity called as a result of that shortfall will be held until the next applicable reset period. This is intended to incentivize Members to make Prefund Deposits to avoid Liquidity Calls, since Prefund Deposits are refunded after the period of activity for which they were made, while Liquidity Calls are retained until the next regular calculation of the applicable supplemental deposit.

Treatment and Use of the Supplemental Deposits

All Regular Activity Supplemental Deposits (other than Regular Activity Prefund Deposits), as adjusted semi-annually, shall remain on deposit in the Clearing Fund, and may not be withdrawn by the applicable Member until five (5) business days after the next following maturity date of the Credit Facility (generally, for a period of 364 days). Regular Activity Prefund Deposits shall remain on deposit in the Clearing Fund and may not be withdrawn by the applicable Member until seven (7) days after they are deposited. All Special Activity Supplemental Deposits (including Special Activity Prefund Deposits) may be refunded to the Special Activity Liquidity Providers seven (7) business days after the end of the applicable Options Expiration Activity Period.

Any amounts deposited in response to a Liquidity Call for an additional Regular Activity Supplemental Deposit must remain in the Clearing Fund until the next semi-annual calculations of the Regular Activity Liquidity Obligations, and any amounts deposited in response to a Liquidity Call for an additional Special Activity Supplemental Deposit must remain in the Clearing Fund until two (2) business days preceding the next Options Expiration Activity Period.

A Member's Supplemental Deposit will be made in addition to its Required Deposit to the Clearing Fund, and any other deposit of any such Member to the Clearing Fund.

A Member's Supplemental Deposit will be considered part of that Member's actual deposit to the Clearing Fund, and, as such, may be used to satisfy obligations of that Member to NSCC, in the same manner as provided in Section 3 of Rule 4. Therefore, if the Member who contributed the Supplemental Deposit defaults, NSCC will be permitted to use its entire actual deposit, which will include the amount of its Supplemental Deposit, to satisfy any loss resulting from closing out that Member's open positions.

A Member's Supplemental Deposit will not, however, constitute part of its Required Deposit under NSCC's Rule 4, and, as such, will not be used, pursuant to Section 4 of Rule 4, to satisfy the obligations of any other Member of NSCC that has defaulted in the performance of its obligations to NSCC. A Member's Supplemental Deposit, therefore, will not be used in calculating any pro rata charge (i.e., loss assessment) due from that Member in the event of the default of another Member under Rule 4. Supplemental Deposits will also not be subject to the provisions of Section 6 of Rule 4 when a Member ceases to be a participant.

Pending any permitted use described in NSCC's Rules, the aggregate of all Supplemental Deposits on deposit at NSCC may be invested by NSCC as permitted pursuant to the investment policy adopted by NSCC and as in effect from time to time, and in the same manner the Clearing Fund is invested pursuant to such investment policy. Any interest earned on investment of a Supplemental Deposit, as a part of a Member's actual deposit, will be payable at the rate that NSCC earns on the investment of such funds, credited monthly and paid on demand.

Implementation Timeframe

Pending Commission approval, Members will be advised of the implementation date of this proposal through issuance of an NSCC Important Notice. Members will be provided not less than ten (10) days' notice of the first date on which Supplemental Deposits will be payable.

Proposed Rule Changes

NSCC proposes to amend its Rules to create a new Rule 4A to reflect the changes as described above. For both the Regular Activity Supplemental Deposits and the Special Activity Supplemental Deposits, the new Rule 4A will provide: (i) A general description of the relevant Supplemental Deposit, (ii) a provision describing the calculation and operation of the funding obligation, and (iii) a description of the treatment and permitted uses of the Supplemental Deposit by NSCC. NSCC believes that this proposed rule change contributes to NSCC's goal of assuring that NSCC has adequate liquidity resources to meet its settlement obligations during both Regular Activity Periods and Options Expiration Activity Periods, notwithstanding the default of its unaffiliated Members and/or Affiliated Families that pose the largest aggregate liquidity exposure over the relevant settlement cycle. As such, NSCC believes that the proposal is consistent with the requirements of the Act, as amended, and the rules and regulations thereunder applicable to NSCC.

(B) Self-Regulatory Organization's Statement on Burden on Competition

NSCC believes that the proposed rule change will not impose any burden on competition that is not necessary or appropriate in furtherance of the purposes of the Act. By calculating an unaffiliated Member's or Affiliated Family's Supplemental Deposit funding obligation in proportion to the liquidity needs that such unaffiliated Member or Affiliated Family presents to NSCC, NSCC believes that the proposed rule change will ensure that NSCC's Members fairly and equitably contribute to NSCC's liquidity resources for settlement. Further, NSCC believes that the proposed rule change contributes to the goal of financial stability in the event of Member default, rendering not unreasonable or inappropriate any burden on competition that the changes could be regarded as imposing.

(C) Self-Regulatory Organization's Statement on Comments on the Proposed Rule Change Received From Members, Participants, or Others

Written comments relating to the proposed rule change have not yet been solicited or received. NSCC will notify the Commission of any written comments received by NSCC.

III. Date of Effectiveness of the Proposed Rule Change and Timing for Commission Action

Within 45 days of the date of publication of this notice in the **Federal Register** or within such longer period up to 90 days (i) as the Commission may designate if it finds such longer period to be appropriate and publishes its reasons for so finding or (ii) as to which the self-regulatory organization consents, the Commission will:

(A) By order approve or disapprove such proposed rule change, or

(B) institute proceedings to determine whether the proposed rule change should be disapproved.

The proposal shall not take effect until all regulatory actions required with respect to the proposal are completed.[6] The clearing agency shall

[6] NSCC also filed the proposals contained in this proposed rule change as an advance notice

post notice on its Web site of proposed changes that are implemented.

IV. Solicitation of Comments

Interested persons are invited to submit written data, views, and arguments concerning the foregoing, including whether the proposed rule change is consistent with the Act. Comments may be submitted by any of the following methods:

Electronic Comments

- Use the Commission's Internet comment form (*http://www.sec.gov/rules/sro.shtml*); or
- Send an email to *rule-comments@sec.gov*. Please include File No. SR–NSCC–2013–02 on the subject line.

Paper Comments

- Send paper comments in triplicate to Elizabeth M. Murphy, Secretary, Securities and Exchange Commission, 100 F Street NE., Washington, DC 20549–1090.

All submissions should refer to File No. SR–NSCC–2013–02. This file number should be included on the subject line if email is used. To help the Commission process and review your comments more efficiently, please use only one method. The Commission will post all comments on the Commission's Internet Web site (*http://www.sec.gov/rules/sro.shtml).* Copies of the submission, all subsequent amendments, all written statements with respect to the proposed rule change that are filed with the Commission, and all written communications relating to the proposed rule change between the Commission and any person, other than those that may be withheld from the public in accordance with the provisions of 5 U.S.C. 552, will be available for Web site viewing and printing in the Commission's Public Reference Room, 100 F Street NE., Washington, DC 20549, on official business days between the hours of 10:00 a.m. and 3:00 p.m. Copies of such filings also will be available for inspection and copying at the principal office of NSCC and on NSCC's Web site at *http://dtcc.com/downloads/legal/rule_filings/2013/nscc/SR-NSCC-2013-02.pdf.*

All comments received will be posted without change; the Commission does not edit personal identifying information from submissions. You should submit only information that you wish to make available publicly. All submissions should refer to File No. SR–NSCC–2013–02 and should be submitted on or before May 1, 2013.

For the Commission, by the Division of Trading and Markets, pursuant to delegated authority.[7]

Kevin M. O'Neill,

Deputy Secretary.

[FR Doc. 2013–08332 Filed 4–9–13; 8:45 am]

BILLING CODE 8011–01–P

Pursuant to Section 806(e)(1) of the Clearing Supervision Act and Rule 19b–4(n)(1)(i) thereunder. 12 U.S.C. 5465(e)(1); 17 CFR 240.19b–4(n)(i). Proposed changes filed under the Clearing Supervision Act may be implemented either: at the time the Commission notifies the clearing agency that it does not object to the proposed change and authorizes its implementation, or, if the Commission does not object to the proposed change, within 60 days of the later of (i) the date that the advance notice was filed with the Commission or (ii) the date that any additional information requested by the Commission is received. 12 U.S.C. 5465(e)(1)(G).

[7] 17 CFR 200.30–3(a)(12).

SMALL BUSINESS ADMINISTRATION

[License No. 02/02–0662, 02/02–0661]

DeltaPoint Capital IV, L.P., DeltaPoint Capital IV (New York), L.P.; Notice Seeking Exemption Under Section 312 of the Small Business Investment Act, Conflicts of Interest

Notice is hereby given that DeltaPoint Capital IV, L.P. and DeltaPoint Capital IV (New York), L.P., 45 East Avenue, 6th Floor, Rochester, NY 14604, Federal Licensees under the Small Business Investment Act of 1958, as amended (''the Act''), in connection with the financing of a small concern, has sought an exemption under Section 312 of the Act and Section 107.730, Financings which Constitute Conflicts of Interest of the Small Business Administration (''SBA'') Rules and Regulations (13 CFR 107.730). DeltaPoint Capital IV, L.P. provided financing to Switchgear Acquisition, Inc., 1211 Stewart Avenue, Bethpage, NY 11714. The financing was contemplated for working capital and general corporate purposes.

The financing is brought within the purview of § 107.730(a)(1) of the Regulations because DeltaPoint Capital IV (New York), L.P., an Associate of DeltaPoint Capital IV, L.P., owns more than ten percent of Switchgear Acquisition, Inc.

Therefore, this transaction is considered a financing of an Associate requiring an exemption. Notice is hereby given that any interested person may submit written comments on the transaction within fifteen days of the date of this publication to the Acting Associate Administrator for Investment, U.S. Small Business Administration, 409 Third Street SW., Washington, DC 20416.

Dated: April 4, 2013.

Harry Haskins,

Acting Associate Administrator for Investment.

[FR Doc. 2013–08300 Filed 4–9–13; 8:45 am]

BILLING CODE P

SMALL BUSINESS ADMINISTRATION

[License No. 02/02–0662, 02/02–0661]

DeltaPoint Capital IV, L.P., DeltaPoint Capital IV (New York), L.P.; Notice Seeking Exemption Under Section 312 of the Small Business Investment Act, Conflicts of Interest

Notice is hereby given that DeltaPoint Capital IV, L.P. and DeltaPoint Capital IV (New York), L.P., 45 East Avenue, 6th Floor, Rochester, NY 14604, Federal Licensees under the Small Business Investment Act of 1958, as amended (''the Act''), in connection with the financing of a small concern, has sought an exemption under Section 312 of the Act and Section 107.730, Financings which Constitute Conflicts of Interest of the Small Business Administration (''SBA'') Rules and Regulations (13 CFR 107.730). DeltaPoint Capital IV, L.P. provided financing to BioMaxx, Inc., 1 Fishers Road, Suite 160, Pittsford, NY 14534. The financing was contemplated for working capital and general corporate purposes.

The financing is brought within the purview of § 107.730(a)(1) of the Regulations because DeltaPoint Capital IV (New York), L.P., an Associate of DeltaPoint Capital IV, L.P., owns more than ten percent of Switchgear Acquisition, Inc.

Therefore, this transaction is considered a financing of an Associate requiring an exemption. Notice is hereby given that any interested person may submit written comments on the transaction within fifteen days of the date of this publication to the Acting Associate Administrator for Investment, U.S. Small Business Administration, 409 Third Street SW., Washington, DC 20416.

Dated: April 4, 2013.

Harry Haskins,

Acting Associate Administrator for Investment.

[FR Doc. 2013–08303 Filed 4–9–13; 8:45 am]

BILLING CODE P

SMALL BUSINESS ADMINISTRATION

[Disaster Declaration #13528 and #13529]

Rhode Island Disaster #RI–00012

AGENCY: U.S. Small Business Administration.

ACTION: Notice.

SUMMARY: This is a Notice of the Presidential declaration of a major disaster for Public Assistance Only for the State of Rhode Island (FEMA–4107–DR), dated 03/22/2013.

Incident: Severe winter storm and snowstorm.

Incident Period: 02/08/2013 through 02/09/2013.

Effective Date: 03/22/2013.

Physical Loan Application Deadline Date: 05/21/2013.

Economic Injury (EIDL) Loan Application Deadline Date: 12/23/2013.

ADDRESSES: Submit completed loan applications to: U.S. Small Business Administration, Processing and Disbursement Center, 14925 Kingsport Road, Fort Worth, TX 76155.

FOR FURTHER INFORMATION CONTACT: A. Escobar, Office of Disaster Assistance, U.S. Small Business Administration, 409 3rd Street, SW., Suite 6050, Washington, DC 20416.

SUPPLEMENTARY INFORMATION: Notice is hereby given that as a result of the President's major disaster declaration on 03/22/2013, Private Non-Profit organizations that provide essential services of governmental nature may file disaster loan applications at the address listed above or other locally announced locations.

The following areas have been determined to be adversely affected by the disaster:

Primary Counties: Bristol, Kent, Newport, Providence, Washington.

The Interest Rates are:

	Percent
For Physical Damage:	
Non-Profit Organizations With Credit Available Elsewhere	2.875
Non-Profit Organizations Without Credit Available Elsewhere	2.875
For Economic Injury:	
Non-Profit Organizations Without Credit Available Elsewhere	2.875

The number assigned to this disaster for physical damage is 13528B and for economic injury is 13529B.

(Catalog of Federal Domestic Assistance Numbers 59002 and 59008)

James E. Rivera,

Associate Administrator for Disaster Assistance.

[FR Doc. 2013–08302 Filed 4–9–13; 8:45 am]

BILLING CODE 8025–01–P

SMALL BUSINESS ADMINISTRATION

Interagency Task Force on Veterans Small Business Development

AGENCY: U.S. Small Business Administration.

ACTION: Notice of open Federal Interagency Task Force Meeting.

SUMMARY: The SBA is issuing this notice to announce the location, date, time, and agenda for its public meeting of the Interagency Task Force on Veterans Small Business Development. The meeting will be open to the public.

DATES: Friday, April 26, 2013, from 9:00 a.m. to 12:00 p.m. in the Conference Room.

ADDRESSES: SBA Washington Area District Office, 740 15th Street, NW., Suite 300, Washington, DC 20005.

SUPPLEMENTARY INFORMATION: Pursuant to section 10(a) (2) of the Federal Advisory Committee Act (5 U.S.C., Appendix 2), SBA announces the meeting of the Interagency Task Force on Veterans Small Business Development. The Task Force is established pursuant to Executive Order 13540 and focused on coordinating the efforts of Federal agencies to improve capital, business development opportunities and pre-established Federal contracting goals for small business concerns owned and controlled by veterans (VOB's) and service-disabled veterans (SDVOSB'S). Moreover, the Task Force shall coordinate administrative and regulatory activities and develop proposals relating to ''three focus areas'': (1) Training, Counseling & Capital; (2) Federal Contracting & Verification; (3) Improved Federal Support. On November 1, 2011, the Interagency Task Force on Veterans Small Business Development submitted its first report to the President, which included 18 Recommendations. In addition, the Task Force will allow time to obtain public comment from individuals and representatives of organizations regarding the areas of focus.

FOR FURTHER INFORMATION CONTACT: The meeting is open to the public, however, advance notice of attendance is requested. Anyone wishing to attend and/or make a presentation to the Task Force must contact Cheryl Simms, by April 19, 2013, by email in order to be placed on the agenda. Comments for the Record should be applicable to the ''three focus areas'' of the Task Force and emailed prior to the meeting for inclusion in the public record, verbal presentations; however, will be limited to five minutes in the interest of time and to accommodate as many presenters as possible.

Written comments should be emailed to Cheryl Simms, Program Liaison, Office of Veterans Business Development, U.S. Small Business Administration, 409 3rd Street, SW., Washington, DC 20416, at the email address for the Task Force, *veteransbusiness@sba.gov.* Additionally, if you need accommodations because of a disability or require additional information, please contact Cheryl Simms, Designated Federal Official for the Task Force at (202) 205–6773; or by email at: *cheryl.simms@sba.gov.* For more information, please visit our Web site at *www.sba.gov/vets.*

Dated: April 3, 2013.

Dan Jones,

SBA Committee Management Officer.

[FR Doc. 2013–08301 Filed 4–9–13; 8:45 am]

BILLING CODE P

DEPARTMENT OF TRANSPORTATION

Maritime Administration

Small Shipyard Grant Program; Application Deadlines

AGENCY: Maritime Administration, Department of Transportation.

ACTION: Notice.

SUMMARY: Under the Small Shipyard Grant Program, there is currently $9,457,986.00 available for grants for capital and related improvements to qualified shipyard facilities that will be effective in fostering efficiency,

competitive operations, and quality ship construction, repair, and reconfiguration. This notice announces the intention of the Maritime Administration to provide grants to small shipyards. Catalog of Federal Domestic Assistance Number: 20.814. Potential applicants are advised that, based on past experience, the number of applications will far exceed the funds available and that only a small percentage of applications will be funded. It is anticipated that up to 10 applications will be selected for funding with an average grant amount of about $1 million.

DATES: The period for submitting grant applications, as mandated by statute, commenced on March 26, 2013. All applications must be received by the Maritime Administration by 5:00 p.m. EDT on May 28, 2013. Applications not received by this deadline will not be considered. The Maritime Administration intends to award grants no later than July 24, 2013.

ADDRESSES: Grant Applications should be sent to the Associate Administrator for Business and Finance Development, Room W21–318, Maritime Administration, 1200 New Jersey Avenue SE., Washington, DC 20590.

FOR FURTHER INFORMATION CONTACT: David M. Heller, Director, Office of Shipyards and Marine Engineering, Maritime Administration, Room W21–318, 1200 New Jersey Ave. SE., Washington, DC 20590; *David.Heller@dot.gov*; phone: (202) 366–5737; or fax: (202) 366–6988.

SUPPLEMENTARY INFORMATION: Grants under the Maritime Administration's Small Shipyard Grant Program may not be used to construct buildings or other physical facilities or to acquire land unless such use is specifically approved by the Maritime Administration as being consistent with, and supplemental to, capital and related infrastructure improvements. Grant funds may also be used for maritime training programs to foster technical skills and operational productivity in communities, the economies of which are related to or dependent upon the maritime industry. Grants for such training programs may only be awarded to ''Eligible Applicants'' as described below, but training programs can be established through vendors to such applicants.

Award Information: The Maritime Administration intends to award the full amount of the available funding through grants to applications with merit. No more than 25 percent of the funds available will be awarded to shipyard facilities in one geographic location that have more than 600 production employees. The Maritime Administration will seek to obtain the maximum benefit from the available funding by awarding grants to as many projects with merit as possible. The Maritime Administration may partially fund applications by selecting parts of the total project. The start date and period of performance for each award will depend on the specific project and must be agreed to by the Maritime Administration.

Eligibility Information: 1. Eligible Applicants—46 U.S.C. 54101 provides that shipyards can apply for grants. The shipyard facility for which a grant is sought must be in a single geographical location, located in or near a maritime community, and may not have more than 1200 production employees. The applicant must be the operating company of the shipyard facility. The shipyard facility must construct, repair, or reconfigure vessels 40 feet in length or greater, for commercial or government use. 2. Eligible Projects—capital and related improvement projects that will be effective in fostering efficiency, competitive operations, and quality ship construction, repair, and reconfiguration; and training projects that will be effective in fostering employee skills and enhancing productivity. For capital improvement projects, all items proposed for funding must be new and will be owned by the applicant. For both capital improvement and training projects, all project costs, including the recipient's share, must be incurred after the date of the grant agreement.

Matching Requirements: The Federal funds for any eligible project will not exceed 75 percent of the total cost of such project. The remaining portion of the cost shall be paid in funds from or on behalf of the recipient. The applicant is required to submit detailed financial statements and supporting documentation demonstrating how and when such matching requirement is proposed to be funded as described below. The recipient's entire matching requirement must be paid prior to payment of any Federal funds for the project. However, when good cause can be shown, the Maritime Administrator may waive the matching requirement in whole or in part, if the Administrator determines that a proposed project merits support and cannot be undertaken without a higher percentage of Federal financial assistance.

Application: An application should be filed on Standard Form SF–424 which can be found at *http://marad.dot.gov.* Although the form is available electronically, the application must be filed in hard copy as indicated below due to the amount of information requested. A shipyard facility in a single geographic location applying for multiple projects must do so in a single application. The application for a grant must include all of the following information as an addendum to Standard Form SF–424. The information should be organized in sections as described below:

Section 1: A description of the shipyard including (a) location of the shipyard; (b) a description of the shipyard facilities; (c) years in operation; (d) ownership; (e) customer base; (f) current order book, including type of work; (g) vessels delivered (or major projects) over last 5 years; and (h) Web site address, if any.

Section 2: For each project proposed for funding, the following:

(a) A comprehensive detailed description of the project including a statement of whether the project will replace existing equipment, and, if so, the disposition of the replaced equipment.

(b) A description of the need for the project in relation to shipyard operations and business plan and an explanation of how the project will fulfill this need.

(c) A quantitative analysis demonstrating how the project will be effective in fostering efficiency, competitive operations, and quality ship construction, repair, or reconfiguration (for capital improvement projects) or how the project will be effective in fostering employee skills and enhancing productivity (for training projects). The analysis should quantify the benefits of the projects in terms of man-hours saved, dollars saved, percentages, or other meaningful metrics. The methodology of the analysis should be explained with assumptions used, identified and justified.

(d) A detailed methodology and timeline for implementing the project.

(e) A detailed itemization of the cost of the project together with supporting documentation, including current vendor quotes and estimates of installation costs.

(f) A statement explaining if any elements of the project require action under the National Environmental Policy Act (42 U.S.C. 4321, *et seq.*) or require any licenses or permits. Items 2(a) thru 2(f) should be repeated, in order, for each separate project included in the application.

Section 3: A table with a prioritized list of projects and total cost and Federal portion (in dollars) for each.

Section 4: A description of any existing programs or arrangements, if

any, which will be used to supplement or leverage the Federal grant assistance.

Section 5: Special economic circumstances and conditions, if any, of the maritime community in which the shipyard is located (beyond that which is reflected in the unemployment rate of the county in which the shipyard is located and whether that county is in an economically distressed area, as defined by 42 U.S.C. 3161).

Section 6: Shipyard company officer's certification of each of the following requirements:

(a) That the shipyard facility for which a grant is sought is located in a single geographical location in or near a maritime community and (i) the shipyard facility has no more than 600 production employees, or (ii) the shipyard facility has more than 600 production employees, but fewer than 1200 production employees (shipyard officer must certify to either (i) or (ii));

(b) That the applicant has the authority to carry out the proposed project; and

(c) Certification in accordance with the Department of Transportation's regulation restricting lobbying, 49 CFR part 20, that the applicant has not, and will not, make any prohibited payments out of the requested grant. Certifications are not required to be notarized.

Section 7: Unique identifier of shipyard's parent company (when applicable): Data Universal Numbering System (DUNS + 4 number) (when applicable).

Section 8: 2011 or 2012 (if available) year-end, audited, reviewed, or compiled financial statements, prepared by a certified public accountant, according to U.S. generally accepted accounting principles, not on an income-tax basis. The September 30, 2012 financial statements prepared by the company if December 31, 2012, CPA-prepared statements are not available. Note: Do not provide tax returns.

Section 9: Statement regarding the relationship between applicants and any parents, subsidiaries, or affiliates, if any such entity is going to provide a portion of the match.

Section 10: Evidence documenting applicant's ability to make the proposed matching contribution (loan agreement, commitment from investors, cash on balance sheet, etc.) and in the time period outlined in 2(d) above.

Section 11: Pro-forma financial statements reflecting (a) September 30, or December 31, 2012, financial condition; (b) effect on balance sheet of grant and matching funds (i.e. a decrease in cash or increase in debt, additional equity and an increase in fixed assets); and (c) impact on company's projected financial condition (balance sheet) of completion of project, showing that company will have sufficient financial resources to remain in business.

Section 12: Statement whether during the past five years, the applicant or any predecessor or related company has been in bankruptcy or in reorganization under Chapter 11 of the Bankruptcy Code, or in any insolvency or reorganization proceedings, and whether any substantial property of the applicant or any predecessor or related company had been acquired in any such proceeding or had been subject to foreclosure or receivership during such period. If so, provide details.

Additional information may be requested as deemed necessary by the Maritime Administration in order to facilitate and complete its review of the application. If such information is not provided, the application may be deemed incomplete by the Maritime Administration and will not be processed.

Where to File Application: Submit an original paper copy of the application, one additional paper copy of the application, and two Compact Disks (CDs) each containing complete electronic versions of the application in PDF format to: Associate Administrator for Business and Finance Development, Room W21–318, Maritime Administration, 1200 New Jersey Ave., SE., Washington, DC 20590.

Evaluation of Applications: The Maritime Administration will award grants in its sole discretion in such amounts and under such conditions it determines will best further the statutory purposes of the small shipyard grant program. The Maritime Administration will evaluate the applications on the basis of how well the project for which a grant is requested would be effective in fostering efficiency, competitive operations, and quality ship construction, repair, and reconfiguration (for capital improvement projects) or how well the project for which a grant is requested would be effective in fostering employee skills and enhancing productivity (for training projects), as requested in section 2 (c) above. The economic circumstances and conditions will be based upon the unemployment rate of the county in which the shipyard is located and whether that county is an economically distressed area, supplemented by any special economic circumstances and conditions identified by the applicant. Projects that may require additional environmental assessments such as those including waterside improvements (dredging, bulkheading, pier work, pilings, etc.) will not be considered for funding. Preference will be given to funding applications: (1) That propose matching funds greater than a 25% share of the project; (2) that impact existing operations and/or product lines rather than expanding the capabilities of the shipyard into new product lines or capabilities; and (3) that result in a geographic diversity of grant recipients.

Conditions Attached To Awards: The grant agreement will specify the records to be maintained by the recipient that must be available for review and audit by the Maritime Administration, as well as any other conditions and requirements.

(Authority: 46 U.S.C. 54101 and the Consolidated and Further Continuing Appropriations Act, 2013, Pub. L.113–6.)

Dated: April 8, 2013.

By Order of the Maritime Administrator.

Ryan Kabacinski,

Acting Secretary, Maritime Administration.

[FR Doc. 2013–08486 Filed 4–8–13; 4:15 pm]

BILLING CODE 4910–81–P

DEPARTMENT OF TRANSPORTATION

Surface Transportation Board

[Docket No. AB 33 (Sub-No. 311X)]

Union Pacific Railroad Company—Abandonment Exemption—in Washington County, Idaho

Union Pacific Railroad Company (UP) has filed a verified notice of exemption under 49 C.F.R. pt. 1152 subpart F—*Exempt Abandonments* to abandon 0.28 miles of rail line (New Meadows Industrial Lead), between mileposts 0.22 and 0.50 at Weiser, in Washington County, Idaho. The line traverses United States Postal Service Zip Code 83672.

UP has certified that: (1) No local traffic has moved over the line for at least two years; (2) there is no overhead traffic on the line; (3) no formal complaint filed by a user of rail service on the line (or by a state or local government entity acting on behalf of such user) regarding cessation of service over the line either is pending with the Surface Transportation Board (Board) or with any U.S. District Court or has been decided in favor of complainant within the two-year period; and (4) the requirements at 49 CFR 1105.7(c) (environmental report), 49 CFR 1105.11 (transmittal letter), 49 CFR 1105.12 (newspaper publication), and 49 CFR 1152.50(d)(1) (notice to governmental agencies) have been met.

As a condition to this exemption, any employee adversely affected by the abandonment shall be protected under *Oregon Short Line Railroad—Abandonment Portion Goshen Branch Between Firth & Ammon, in Bingham & Bonneville Counties, Idaho,* 360 I.C.C. 91 (1979). To address whether this condition adequately protects affected employees, a petition for partial revocation under 49 U.S.C. 10502(d) must be filed.

Provided no formal expression of intent to file an offer of financial assistance (OFA) has been received, this exemption will be effective on May 10, 2013, unless stayed pending reconsideration. Petitions to stay that do not involve environmental issues,[1] formal expressions of intent to file an OFA under 49 CFR 1152.27(c)(2),[2] and trail use/rail banking requests under 49 CFR 1152.29 must be filed by April 22, 2013. Petitions to reopen or requests for public use conditions under 49 CFR 1152.28 must be filed by April 30, 2013, with the Surface Transportation Board, 395 E Street SW., Washington, DC 20423–0001.

A copy of any petition filed with the Board should be sent to UP's representative: Mack H. Shumate, Jr., 101 North Wacker Drive, #1920, Chicago, IL 60606.

If the verified notice contains false or misleading information, the exemption is void *ab initio.*

UP has filed a combined environmental and historic report that addresses the effects, if any, of the abandonment on the environment and historic resources. OEA will issue an environmental assessment (EA) by April 15, 2013. Interested persons may obtain a copy of the EA by writing to OEA (Room 1100, Surface Transportation Board, Washington, DC 20423–0001) or by calling OEA at (202) 245–0305. Assistance for the hearing impaired is available through the Federal Information Relay Service at (800) 877–8339. Comments on environmental and historic preservation matters must be filed within 15 days after the EA becomes available to the public.

Environmental, historic preservation, public use, or trail use/rail banking conditions will be imposed, where appropriate, in a subsequent decision.

Pursuant to the provisions of 49 CFR 1152.29(e)(2), UP shall file a notice of consummation with the Board to signify that it has exercised the authority granted and fully abandoned the line. If consummation has not been effected by UP's filing of a notice of consummation by April 10, 2014, and there are no legal or regulatory barriers to consummation, the authority to abandon will automatically expire.

Board decisions and notices are available on our Web site at ''*WWW.STB.DOT.GOV.*''

Decided: April 4, 2013.

By the Board, Rachel D. Campbell, Director, Office of Proceedings.

Derrick A. Gardner,

Clearance Clerk.

[FR Doc. 2013–08393 Filed 4–9–13; 8:45 am]

BILLING CODE 4915–01–P

[1] The Board will grant a stay if an informed decision on environmental issues (whether raised by a party or by the Board's Office of Environmental Analysis (OEA) in its independent investigation) cannot be made before the exemption's effective date. *See Exemption of Out-of-Serv. Rail Lines,* 5 I.C.C. 2d 377 (1989). Any request for a stay should be filed as soon as possible so that the Board may take appropriate action before the exemption's effective date.

[2] Each OFA must be accompanied by the filing fee, which is currently set at $1,600. *See* 49 CFR 1002.2(f)(25).

DEPARTMENT OF THE TREASURY

Office of Foreign Assets Control

Unblocking of Specially Designated Nationals and Blocked Persons Pursuant To Executive Order 12978

AGENCY: Office of Foreign Assets Control, Treasury.

ACTION: Notice.

SUMMARY: The Department of the Treasury's Office of Foreign Assets Control (''OFAC'') is publishing the name of one entity whose property and interests in property have been unblocked pursuant to Executive Order 12978 of October 21, 1995, ''Blocking Assets and Prohibiting Transactions With Significant Narcotics Traffickers.'' In addition, OFAC is publishing an amendment to the identifying information of four individuals previously designated pursuant to Executive Order 12978 to remove the name of the entity from their published identifying information.

DATES: The unblocking and removal from the list of Specially Designated Nationals and Blocked Persons (''SDN List'') of the one entity identified in this notice whose property and interests in property were blocked pursuant to Executive Order 12978 of October 21, 1995, is effective on April 3, 2013.

FOR FURTHER INFORMATION CONTACT: Assistant Director, Sanctions Compliance & Evaluation, Department of the Treasury, Office of Foreign Assets Control, Washington, DC 20220, Tel: (202) 622–2490.

SUPPLEMENTARY INFORMATION:

Electronic and Facsimile Availability

This document and additional information concerning OFAC are available from OFAC's Web site (*www.treasury.gov/ofac*) or via facsimile through a 24-hour fax-on demand service at (202) 622–0077.

Background

On October 21, 1995, the President, invoking the authority, *inter alia,* of the International Emergency Economic Powers Act (50 U.S.C. 1701–1706) (''IEEPA''), issued Executive Order 12978 (60 FR 54579, October 24, 1995) (the ''Order''). In the Order, the President declared a national emergency to deal with the threat posed by significant foreign narcotics traffickers centered in Colombia and the harm that they cause in the United States and abroad.

Section 1 of the Order blocks, with certain exceptions, all property and interests in property that are in the United States, or that hereafter come within the United States or that are or hereafter come within the possession or control of United States persons, of: (1) the foreign persons listed in an Annex to the Order; (2) any foreign person determined by the Secretary of Treasury, in consultation with the Attorney General and the Secretary of State: (a) To play a significant role in international narcotics trafficking centered in Colombia; or (b) to materially assist in, or provide financial or technological support for or goods or services in support of, the narcotics trafficking activities of persons designated in or pursuant to the Order; and (3) persons determined by the Secretary of the Treasury, in consultation with the Attorney General and the Secretary of State, to be owned or controlled by, or to act for or on behalf of, persons designated pursuant to the Order.

On April 3, 2013, the Director of OFAC removed from the SDN List the entity listed below, whose property and interests in property were blocked pursuant to the Order:

CORPORACION DEPORTIVA AMERICA (a.k.a. CLUB AMERICA DE CALI; a.k.a. CLUB DEPORTIVO AMERICA), Carrera 56 No. 2–70, Cali, Colombia; Avenida Guadalupe No. 2–70, Cali, Colombia; Calle 24N No. 5BN–22, Cali, Colombia; Calle 13 Carrera 70, Cali, Colombia; Sede Cascajal, Cali, Colombia; Sede Naranjal, Cali, Colombia; NIT # 890305773–4 (Colombia) [SDNT].

In addition, OFAC has amended the identifying information for the following individuals previously designated pursuant to Order:

1. PUENTE GONZALEZ, Carlos Alberto, c/o CORPORACION DEPORTIVA AMERICA, Cali, Colombia; DOB 28 Nov 1937; Cedula No. 2449885 (Colombia); Passport 2449885 (Colombia) (individual) [SDNT].

2. RODRIGUEZ MONDRAGON, Jaime, c/o PLASTICOS CONDOR LTDA., Cali, Colombia; c/o LABORATORIOS KRESSFOR DE COLOMBIA S.A., Bogota, Colombia; c/o FLEXOEMPAQUES LTDA., Cali, Colombia; c/o GRACADAL S.A., Cali, Colombia; c/o LABORATORIOS BLAIMAR DE COLOMBIA S.A., Bogota, Colombia; c/o MARIELA DE RODRIGUEZ Y CIA. S. EN C., Cali, Colombia; c/o PENTA PHARMA DE COLOMBIA S.A., Bogota, Colombia; c/o DISTRIBUIDORA MIGIL LTDA., Cali, Colombia; c/o RIONAP COMERCIO Y REPRESENTACIONES S.A., Quito, Ecuador; c/o DISTRIBUIDORA DE DROGAS CONDOR LTDA., Bogota, Colombia; c/o DISTRIBUIDORA DE DROGAS LA REBAJA S.A., Bogota, Colombia; c/o DEPOSITO POPULAR DE DROGAS S.A., Cali, Colombia; c/o FARMATODO S.A., Bogota, Colombia; c/o BLANCO PHARMA S.A., Bogota, Colombia; c/o CORPORACION DEPORTIVA AMERICA, Cali, Colombia; c/o D'CACHE S.A., Cali, Colombia; c/o INVERSIONES MONDRAGON Y CIA. S.C.S., Cali, Colombia; c/o CREDIREBAJA S.A., Cali, Colombia; c/o ASESORIAS DE INGENIERIA EMPRESA UNIPERSONAL, Cali, Colombia; c/o BONOMERCAD S.A., Bogota, Colombia; c/o DECAFARMA S.A., Bogota, Colombia; c/o DROCARD S.A., Bogota, Colombia; c/o INVERSIONES Y CONSTRUCCIONES COSMOVALLE LTDA., Cali, Colombia; c/o JAROMO INVERSIONES S.L., Madrid, Spain; c/o PROSPECTIVA EMPRESA UNIPERSONAL, Cali, Colombia; c/o REPRESENTACIONES Y DISTRIBUCIONES HUERTAS Y ASOCIADOS S.A., Bogota, Colombia; c/o SERVICIOS DE LA SABANA E.U., Bogota, Colombia; c/o FUNDASER, Cali, Colombia; c/o LATINFAMRACOS S.A., Quito, Ecuador; c/o ALERO S.A., Cali, Colombia; c/o MEGAPLAST S.A., Palmira, Valle, Colombia; DOB 30 Mar 1960; Cedula No. 16637592 (Colombia); Passport AE426347 (Colombia); alt. Passport 16637592 (Colombia); N.I.E. x2641093–A (Spain) (individual) [SDNT].

3. RODRIGUEZ MONDRAGON, Maria Alexandra (a.k.a. RODRIGUEZ MONDRAGON, Alexandra), c/o BLANCO PHARMA S.A., Bogota, Colombia; c/o DEPOSITO POPULAR DE DROGAS S.A., Cali, Colombia; c/o DISTRIBUIDORA MIGIL LTDA., Cali, Colombia; c/o MARIELA DE RODRIGUEZ Y CIA. S. EN C., Cali, Colombia; c/o PENTA PHARMA DE COLOMBIA S.A., Bogota, Colombia; c/o TOBOGON, Cali, Colombia; c/o DISTRIBUIDORA DE DROGAS CONDOR LTDA., Bogota, Colombia; c/o DISTRIBUIDORA DE DROGAS LA REBAJA S.A., Bogota, Colombia; c/o LABORATORIOS BLAIMAR DE COLOMBIA S.A., Bogota, Colombia; c/o GRACADAL S.A., Cali, Colombia; c/o INTERAMERICA DE CONSTRUCCIONES S.A., Cali, Colombia; c/o CORPORACION DEPORTIVA AMERICA, Cali, Colombia; c/o D'CACHE S.A., Cali, Colombia; c/o INVERSIONES MONDRAGON Y CIA. S.C.S., Cali, Colombia; c/o MARIELA MONDRAGON DE R. Y CIA. S. EN C., Cali, Colombia; c/o CREDIREBAJA S.A., Cali, Colombia; c/o CUSTOMER NETWORKS S.L., Madrid, Spain; c/o DROCARD S.A., Bogota, Colombia; c/o INVERSIONES INMOBILIARIAS VALERIA S.L., Madrid, Spain; c/o INVERSIONES Y CONSTRUCCIONES COSMOVALLE LTDA., Cali, Colombia; c/o SISTEMAS Y SERVICIOS TECNICOS EMPRESA UNIPERSONAL, Cali, Colombia; c/o FUNDASER, Cali, Colombia; c/o ALERO S.A., Cali, Colombia; DOB 30 May 1969; alt. DOB 05 May 1969; Cedula No. 66810048 (Colombia); Passport AD359106 (Colombia); alt. Passport 66810048 (Colombia); N.I.E. X2561613–B (Spain) (individual) [SDNT].

4. RODRIGUEZ OREJUELA DE GIL, Amparo, c/o DISTRIBUIDORA MIGIL LTDA., Cali, Colombia; c/o LABORATORIOS BLAIMAR DE COLOMBIA S.A., Bogota, Colombia; c/o CREACIONES DEPORTIVAS WILLINGTON LTDA., Cali, Colombia; c/o DEPOSITO POPULAR DE DROGAS S.A., Cali, Colombia; c/o LABORATORIOS KRESSFOR DE COLOMBIA S.A., Bogota, Colombia; c/o BLANCO PHARMA S.A., Bogota, Colombia; c/o RADIO UNIDAS FM S.A., Cali, Colombia; c/o DISTRIBUIDORA DE DROGAS CONDOR LTDA., Bogota, Colombia; c/o CORPORACION DEPORTIVA AMERICA, Cali, Colombia; c/o D'CACHE S.A., Cali, Colombia; c/o DROBLAM S.A., Cali, Colombia; c/o AQUILEA S.A., Cali, Colombia; DOB 13 Mar 1949; Cedula No. 31218703 (Colombia); Passport AC342062 (Colombia) (individual) [SDNT].

The listings for these individuals now appear as:

1. PUENTE GONZALEZ, Carlos Alberto; DOB 28 Nov 1937; Cedula No. 2449885 (Colombia); Passport 2449885 (Colombia) (individual) [SDNT].

2. RODRIGUEZ MONDRAGON, Jaime; DOB 30 Mar 1960; Cedula No. 16637592 (Colombia); Passport AE426347 (Colombia); alt. Passport 16637592 (Colombia); N.I.E. x2641093–A (Spain) (individual) [SDNT] (Linked To: PLASTICOS CONDOR LTDA.; Linked To: LABORATORIOS KRESSFOR DE COLOMBIA S.A.; Linked To: FLEXOEMPAQUES LTDA.; Linked To: LABORATORIOS BLAIMAR DE COLOMBIA S.A.; Linked To: INVERSIONES MONDRAGON Y CIA. S.C.S.; Linked To: PENTA PHARMA DE COLOMBIA S.A.; Linked To: RIONAP COMERCIO Y REPRESENTACIONES S.A.; Linked To: DISTRIBUIDORA DE DROGAS CONDOR LTDA.; Linked To: DISTRIBUIDORA DE DROGAS LA REBAJA S.A.; Linked To: DEPOSITO POPULAR DE DROGAS S.A.; Linked To: LABORATORIOS BLANCO PHARMA S.A.; Linked To: D'CACHE S.A.; Linked To: CREDIREBAJA S.A; Linked To: ASESORIAS DE INGENIERIA EMPRESA UNIPERSONAL; Linked To: BONOMERCAD S.A.; Linked To: DECAFARMA S.A.; Linked To: DROCARD S.A.; Linked To: JAROMO INVERSIONES S.L.; Linked To: PROSPECTIVA EMPRESA UNIPERSONAL; Linked To: REPRESENTACIONES Y DISTRIBUCIONES HUERTAS Y ASOCIADOS S.A.; Linked To: SERVICIOS DE LA SABANA E.U.; Linked To: FUNDASER; Linked To: ALERO S.A.; Linked To: MEGAPLAST S.A.; Linked To: DISMERCOOP; Linked To: DISTRIBUIDORA MIGIL LTDA.; Linked To: LATINOAMERICANA DE FARMACOS S.A.).

3. RODRIGUEZ MONDRAGON, Maria Alexandra (a.k.a. RODRIGUEZ MONDRAGON, Alexandra); DOB 30 May 1969; alt. DOB 05 May 1969; Cedula No. 66810048 (Colombia); Passport AD359106 (Colombia); alt. Passport 66810048 (Colombia); N.I.E. X2561613–B (Spain) (individual) [SDNT] (Linked To: LABORATORIOS BLANCO PHARMA S.A.; Linked To: DEPOSITO POPULAR DE DROGAS S.A.; Linked To: DISTRIBUIDORA MIGIL LTDA.; Linked To: INVERSIONES MONDRAGON Y CIA. S.C.S.; Linked To: PENTA PHARMA DE COLOMBIA S.A.; Linked To: TOBOGON; Linked To: DISTRIBUIDORA DE DROGAS CONDOR LTDA.; Linked To: DISTRIBUIDORA DE DROGAS LA REBAJA S.A.; Linked To: LABORATORIOS BLAIMAR DE COLOMBIA S.A.; Linked To: DISMERCOOP; Linked To: INTERAMERICANA DE

CONSTRUCCIONES S.A.; Linked To: D'CACHE S.A.; Linked To: MARIELA MONDRAGON DE R. Y CIA. S. EN C.; Linked To: CREDIREBAJA S.A; Linked To: DROCARD S.A.; Linked To: INVERSIONES INMOBILIARIAS VALERIA S.L.; Linked To: SISTEMAS Y SERVICIOS TECNICOS EMPRESA UNIPERSONAL; Linked To: FUNDASER; Linked To: ALERO S.A.).

4. RODRIGUEZ OREJUELA DE GIL, Amparo; DOB 13 Mar 1949; Cedula No. 31218703 (Colombia); Passport AC342062 (Colombia) (individual) [SDNT] (Linked To: LABORATORIOS BLAIMAR DE COLOMBIA S.A.; Linked To: DISTRIBUIDORA MIGIL LTDA.; Linked To: DEPOSITO POPULAR DE DROGAS S.A.; Linked To: LABORATORIOS KRESSFOR DE COLOMBIA S.A.; Linked To: LABORATORIOS BLANCO PHARMA S.A.; Linked To: RADIO UNIDAS FM S.A.; Linked To: DISTRIBUIDORA DE DROGAS CONDOR LTDA.; Linked To: D'CACHE S.A.; Linked To: LABORATORIOS Y COMERCIALIZADORA DE MEDICAMENTOS DROBLAM S.A.; Linked To: AQUILEA S.A.).

Dated: April 3, 2013.

Adam J. Szubin,

Director, Office of Foreign Assets Control.

[FR Doc. 2013–08359 Filed 4–9–13; 8:45 am]

BILLING CODE 4810–AL–P

DEPARTMENT OF THE TREASURY

Office of Foreign Assets Control

Publication of General Licenses Related to the Burma Sanctions Program

AGENCY: Office of Foreign Assets Control, Treasury.

ACTION: Notice, publication of general licenses.

SUMMARY: The U.S. Department of the Treasury's Office of Foreign Assets Control (''OFAC'') is publishing General License No. 18 and General License No. 19 issued under the Burma sanctions program on November 16, 2012, and February 22, 2013, respectively. General License No. 18 authorizes the importation into the United States of any article that is a product of Burma, subject to certain limitations. General License No. 19 authorizes transactions involving Asia Green Development Bank, Ayeyarwady Bank, Myanma Economic Bank, and Myanma Investment and Commercial Bank, subject to certain limitations.

DATES: *Effective Dates:* November 16, 2012, for General License No. 18 and February 22, 2013, for General License No. 19.

FOR FURTHER INFORMATION CONTACT: Assistant Director for Sanctions Compliance & Evaluation, tel.: 202–622–2490, Assistant Director for Licensing, tel.: 202–622–2480, Assistant Director for Regulatory Affairs, tel.: 202–622–4855, Assistant Director for Policy, tel.: 202–622–2746, Office of Foreign Assets Control, or Chief Counsel (Foreign Assets Control), tel.: 202–622–2410, Office of the General Counsel, Department of the Treasury (not toll free numbers).

SUPPLEMENTARY INFORMATION:

Electronic and Facsimile Availability

This document and additional information concerning OFAC are available from OFAC's Web site (*www.treasury.gov/ofac*). Certain general information pertaining to OFAC's sanctions programs also is available via facsimile through a 24-hour fax-on-demand service, tel.: 202/622–0077.

Background

The Department of State, pursuant to a delegation of authority from the President, has waived the ban on the importation of products of Burma set forth in section 3(a) of the Burmese Freedom and Democracy Act of 2003 (''BFDA'') and implemented by Executive Order 13310 of July 28, 2003.

Consistent with this waiver, on November 16, 2012, OFAC issued General License No. 18 (''GL 18'') authorizing the importation into the United States of any article that is a product of Burma, subject to certain limitations. GL 18 does not authorize the importation into the United States of jadeite or rubies mined or extracted from Burma, or of articles of jewelry containing jadeite or rubies mined or extracted from Burma, or any other activity prohibited by Section 3A of the BFDA, an amendment added by the Tom Lantos Block Burmese JADE (Junta's Anti-Democratic Efforts) Act of 2008. GL 18 also does not authorize transactions with any person whose property and interests in property are blocked under the Burma sanctions program.

On February 22, 2013, OFAC issued General License No. 19 (''GL 19'') authorizing U.S. persons to conduct most transactions, including opening and maintaining accounts and conducting a range of other financial services, with four blocked Burmese financial institutions: Asia Green Development Bank, Ayeyarwady Bank, Myanma Economic Bank, and Myanma Investment and Commercial Bank. Among other limitations, GL 19 does not unblock any property or interests in property or authorize transactions involving any other person blocked under the Burma sanctions program.

With this notice, OFAC is publishing General License No. 18 and General License No. 19 in the **Federal Register**.

General License No. 18

Authorizing the Importation of Products of Burma

(a) The importation into the United States of any article that is a product of Burma is authorized, subject to the limitations set forth in paragraphs (c) and (e) of this general license.

(b) For the purposes of this general license, the term *product of Burma* means goods of Burmese origin pursuant to rules of origin of U.S. Customs and Border Protection.

(c) This general license does not authorize the importation into the United States of jadeite or rubies mined or extracted from Burma, or of articles of jewelry containing jadeite or rubies mined or extracted from Burma or any other activity prohibited by Section 3A of the Burmese Freedom and Democracy Act of 2003 (Pub. L. 108–61), as amended by the Tom Lantos Block Burmese JADE (Junta's Anti-Democratic Efforts) Act of 2008 (Pub. L. 110–286).

(d) For the purposes of this general license, the term *jadeite* means any jadeite classifiable under chapter heading 7103 of the Harmonized Tariff Schedule of the United States (''HTS''); the term *rubies* means any rubies classifiable under chapter heading 7103 of the HTS; and the term *articles of jewelry containing jadeite or rubies* means any article of jewelry classifiable under chapter heading 7113 of the HTS that contains jadeite or rubies, or any article of jadeite or rubies classifiable under chapter heading 7116 of the HTS.

(e) This general license does not authorize transactions with, directly or indirectly, any person whose property and interests in property are blocked pursuant to 31 CFR 537.201(a), Executive Order 13448 of October 18, 2007, Executive Order 13464 of April 30, 2008, or Executive Order 13619 of July 11, 2012.

Note 1 to General License No. 18: The reimportation into the United States of jadeite, rubies, and articles of jewelry containing jadeite or rubies that were previously exported from the United States, including those that accompanied an individual outside the United States for personal use, if they are reimported into the United States by the same person who exported them, without having been advanced in value or improved in condition by any process or other means while outside

the United States, is not prohibited. See 19 CFR 12.151.

Note 2 to General License No. 18: The importation into the United States of jadeite or rubies mined or extracted from a country other than Burma, or of articles of jewelry containing jadeite or rubies mined or extracted from a country other than Burma, is prohibited unless such importation satisfies the conditions set forth in 19 CFR § 12.151.

Issued: November 16, 2012.

General License No. 19

General License With Respect to Asia Green Development Bank, Ayeyarwady Bank, Myanma Economic Bank, and Myanma Investment and Commercial Bank

(a) Effective February 22, 2013, all transactions involving Asia Green Development Bank, Ayeyarwady Bank, Myanma Economic Bank, and Myanma Investment and Commercial Bank are authorized, subject to the limitations set forth below.

(b) This general license does not authorize transactions involving any person other than Asia Green Development Bank, Ayeyarwady Bank, Myanma Economic Bank, and Myanma Investment and Commercial Bank whose property and interests in property are blocked pursuant to 31 CFR 537.201(a), Executive Order 13448 of October 18, 2007, Executive Order 13464 of April 30, 2008, or Executive Order 13619 of July 11, 2012.

(c) This general license does not authorize, in connection with the provision of security services, the exportation or reexportation of financial services, directly or indirectly, to the Burmese Ministry of Defense, including the Office of Procurement; any state or non-state armed group; or any entity in which any of the foregoing own a 50 percent or greater interest.

(d) This general license does not authorize any new investment, as defined in 31 CFR 537.311, including in or with Asia Green Development Bank, Ayeyarwady Bank, Myanma Economic Bank, or Myanma Investment and Commercial Bank.

(e) This general license does not authorize the importation into the United States of jadeite or rubies mined or extracted from Burma, or of articles of jewelry containing jadeite or rubies mined or extracted from Burma or any other activity prohibited by Section 3A of the Tom Lantos Block Burmese JADE (Junta's Anti-Democratic Efforts) Act of 2008 (Public Law 110–286).

(f) All property and interests in property blocked pursuant to 31 CFR 537.201(a), Executive Order 13448 of October 18, 2007, Executive Order 13464 of April 30, 2008, or Executive Order 13619 of July 11, 2012, remain blocked.

Note to General License No. 19: As a result of this general license, the special measures against Burma imposed under Section 311 of the USA PATRIOT Act (Public Law 107–56) no longer apply to the operation of correspondent accounts for Asia Green Development Bank, Ayeyarwady Bank, Myanma Economic Bank, and Myanma Investment and Commercial Bank, or to transactions that are conducted through such accounts, provided the transactions are authorized pursuant to the Burmese Sanctions Regulations. See 31 CFR § 1010.651(b)(3). This general license does not affect any obligation of U.S. financial institutions processing such transactions to conduct enhanced due diligence under Section 312 of the USA PATRIOT Act.

Issued: February 22, 2013.

Dated: April 4, 2013.

Adam J. Szubin,

Director, Office of Foreign Assets Control.

[FR Doc. 2013–08361 Filed 4–9–13; 8:45 am]

BILLING CODE 4810–AL–P

DEPARTMENT OF THE TREASURY

Internal Revenue Service

Proposed Collection; Comment Request for Regulation Project

AGENCY: Internal Revenue Service (IRS), Treasury.

ACTION: Notice and request for comments.

SUMMARY: The Department of the Treasury, as part of its continuing effort to reduce paperwork and respondent burden, invites the general public and other Federal agencies to take this opportunity to comment on proposed and/or continuing information collections, as required by the Paperwork Reduction Act of 1995, Public Law 104–13 (44 U.S.C. 3506(c)(2)(A)). Currently, the IRS is soliciting comments computation of foreign taxes deemed paid under section 902 pursuant to a pooling mechanism for undistributed earnings and foreign axes.

DATES: Written comments should be received on or before June 10, 2013 to be assured of consideration.

ADDRESSES: Direct all written comments to Yvette Lawrence, Internal Revenue Service, Room 6129, 1111 Constitution Avenue NW., Washington, DC 20224.

FOR FURTHER INFORMATION CONTACT: Requests for additional information or copies of the regulation should be directed to Allan Hopkins, at (202) 622–6665, or at Internal Revenue Service, Room 6129, 1111 Constitution Avenue NW., Washington, DC 20224, or through the internet, at *Allan.M.Hopkins@irs.gov.*

SUPPLEMENTARY INFORMATION:

Title: Computation of Foreign Taxes Deemed Paid Under Section 902 Pursuant to a Pooling Mechanism for Undistributed Earnings and Foreign Taxes.

OMB Number: 1545–1458.

Regulation Project Number: Reg–209835–86 (formerly INTL–933–86).

Abstract: This regulation provides rules for computing foreign taxes deemed paid under Internal Revenue Code section 902. The regulation affects foreign corporations and their United States corporate shareholders that own directly at least 10% of the voting stock of the foreign corporation.

Current Actions: There are no changes being made to this existing regulation.

Type of Review: Extension of a currently approved collection.

Affected Public: Business or other for-profit organizations.

The burden for the collection of information is reflected in the burden for Form 1118, Foreign Tax Credit—Corporations.

An agency may not conduct or sponsor, and a person is not required to respond to, a collection of information unless the collection of information displays a valid OMB control number. Books or records relating to a collection of information must be retained as long as their contents may become material in the administration of any internal revenue law. Generally, tax returns and tax return information are confidential, as required by 26 U.S.C. 6103.

Request for Comments: Comments submitted in response to this notice will be summarized and/or included in the request for OMB approval. All comments will become a matter of public record. Comments are invited on: (a) Whether the collection of information is necessary for the proper performance of the functions of the agency, including whether the information shall have practical utility; (b) the accuracy of the agency's estimate of the burden of the collection of information; (c) ways to enhance the quality, utility, and clarity of the information to be collected; (d) ways to minimize the burden of the collection of information on respondents, including through the use of automated collection techniques or other forms of information technology; and (e) estimates of capital or start-up costs and costs of operation, maintenance, and purchase of services to provide information.

Approved: March 22, 2013.

Yvette Lawrence,

IRS Reports Clearance Officer.

[FR Doc. 2013–08298 Filed 4–9–13; 8:45 am]

BILLING CODE 4830–01–P

DEPARTMENT OF THE TREASURY

Internal Revenue Service

Proposed Collection; Comment Request for Regulation Project

AGENCY: Internal Revenue Service (IRS), Treasury.

ACTION: Notice and request for comments.

SUMMARY: The Department of the Treasury, as part of its continuing effort to reduce paperwork and respondent burden, invites the general public and other Federal agencies to take this opportunity to comment on proposed and/or continuing information collections, as required by the Paperwork Reduction Act of 1995, Public Law 104–13 (44 U.S.C. 3506(c)(2)(A)). Currently, the IRS is soliciting comments concerning income attributable to domestic production activities.

DATES: Written comments should be received on or before June 10, 2013 to be assured of consideration.

ADDRESSES: Direct all written comments to Yvette Lawrence, Internal Revenue Service, Room 6129, 1111 Constitution Avenue NW., Washington, DC 20224.

FOR FURTHER INFORMATION CONTACT: Requests for additional information or copies of the regulations should be directed to Allan Hopkins at Internal Revenue Service, Room 6129, 1111 Constitution Avenue NW., Washington, DC 20224, or at (202)622–6665, or through the Internet at *Allan.M.Hopkins@irs.gov.*

SUPPLEMENTARY INFORMATION:

Title: Income Attributable to Domestic Production Activities.

OMB Number: 1545–1966.

Regulation Project Number: REG–105847–05.

Abstract: The regulations provide guidance with respect to section 199, which provides a deduction for income attributable to domestic production activities. A taxpayer receiving certain patronage dividends or certain qualified per-unit retain allocations from a cooperative (to which subchapter T of the Internal Revenue Code applies), which has manufactured, produced, grown, or extracted, in whole or in significant part, any agricultural or horticultural products, or has marketed any agricultural or horticultural product, is allowed a deduction under section 199. The collection of information in the proposed regulations involves a written notice mailed by a cooperative to its patrons during the payment period described in section 1382 which allows the patrons to claim the section 199 deduction.

Current Actions: There is no change to this existing regulation.

Type of Review: Extension of a currently approved collection.

Affected Public: Business or other for-profit organizations.

Estimated Number of Respondents: 3,000,000.

Estimated Time per Respondent: 18 minutes.

Estimated Total Annual Burden Hours: 9,000.

The following paragraph applies to all of the collections of information covered by this notice:

An agency may not conduct or sponsor, and a person is not required to respond to, a collection of information unless the collection of information displays a valid OMB control number. Books or records relating to a collection of information must be retained as long as their contents may become material in the administration of any internal revenue law. Generally, tax returns and tax return information are confidential, as required by 26 U.S.C. 6103.

Request for Comments: Comments submitted in response to this notice will be summarized and/or included in the request for OMB approval. All comments will become a matter of public record. Comments are invited on: (a) Whether the collection of information is necessary for the proper performance of the functions of the agency, including whether the information shall have practical utility; (b) the accuracy of the agency's estimate of the burden of the collection of information; (c) ways to enhance the quality, utility, and clarity of the information to be collected; (d) ways to minimize the burden of the collection of information on respondents, including through the use of automated collection techniques or other forms of information technology; and (e) estimates of capital or start-up costs and costs of operation, maintenance, and purchase of services to provide information.

Approved: March 22, 2013.

Yvette Lawrence,

IRS Reports Clearance Officer.

[FR Doc. 2013–08291 Filed 4–9–13; 8:45 am]

BILLING CODE 4830–01–P

DEPARTMENT OF THE TREASURY

Internal Revenue Service

Proposed Collection; Comment Request for Regulation Project

AGENCY: Internal Revenue Service (IRS), Treasury.

ACTION: Notice and request for comments.

SUMMARY: The Department of the Treasury, as part of its continuing effort to reduce paperwork and respondent burden, invites the general public and other Federal agencies to take this opportunity to comment on proposed and/or continuing information collections, as required by the Paperwork Reduction Act of 1995, Public Law 104–13 (44 U.S.C. 3506(c)(2)(A)). Currently, the IRS is soliciting comments concerning relief from joint and several liability.

DATES: Written comments should be received on or before June 10, 2013 to be assured of consideration.

ADDRESSES: Direct all written comments to Yvette Lawrence, Internal Revenue Service, Room 6129, 1111 Constitution Avenue NW., Washington, DC 20224.

FOR FURTHER INFORMATION CONTACT: Requests for additional information or copies of the regulations should be directed to Allan Hopkins, at Internal Revenue Service, Room 6129, 1111 Constitution Avenue NW., Washington, DC 20224, or at (202) 622–6665, or through the Internet at *Allan.M.Hopkins@irs.gov.*

SUPPLEMENTARY INFORMATION:

Title: Relief From Joint and Several Liability.

OMB Number: 1545–1719.

Regulation Project Number: REG–106446–98.

Abstract: The regulation under section 6015 provides guidance regarding relief from the joint and several liability imposed by section 6013(d)(3). The regulations provide specific guidance on the three relief provisions of section 6015 and on how taxpayers would file a claim for such relief. In addition, the regulations provide guidance regarding Tax Court review of certain types of claims for relief, as well as information regarding the rights of the nonrequesting spouse. The regulations also clarify that, under section 6013, a return is not a joint return if one of the spouses signs the return under duress.

Current Actions: There is no change to this existing regulation.

Type of Review: Extension of a currently approved collection.

Affected Public: Individuals.

The estimate of the reporting burden in § 1.6015–5 for filing a claim for relief from joint and several liability is reflected in the burden of Form 8857.

The following paragraph applies to all of the collections of information covered by this notice:

An agency may not conduct or sponsor, and a person is not required to respond to, a collection of information unless the collection of information displays a valid OMB control number. Books or records relating to a collection of information must be retained as long as their contents may become material in the administration of any internal revenue law. Generally, tax returns and tax return information are confidential, as required by 26 U.S.C. 6103.

Request for Comments: Comments submitted in response to this notice will be summarized and/or included in the request for OMB approval. All comments will become a matter of public record. Comments are invited on: (a) Whether the collection of information is necessary for the proper performance of the functions of the agency, including whether the information shall have practical utility; (b) the accuracy of the agency's estimate of the burden of the collection of information; (c) ways to enhance the quality, utility, and clarity of the information to be collected; (d) ways to minimize the burden of the collection of information on respondents, including through the use of automated collection techniques or other forms of information technology; and (e) estimates of capital or start-up costs and costs of operation, maintenance, and purchase of services to provide information.

Approved: March 22, 2013.

Yvette Lawrence,

IRS Reports Clearance Officer.

[FR Doc. 2013–08297 Filed 4–9–13; 8:45 am]

BILLING CODE 4830–01–P

DEPARTMENT OF THE TREASURY

Internal Revenue Service

Proposed Collection; Comment Request for Notice 2009–90

AGENCY: Internal Revenue Service (IRS), Treasury.

ACTION: Notice and request for comments.

SUMMARY: The Department of the Treasury, as part of its continuing effort to reduce paperwork and respondent burden, invites the general public and other Federal agencies to take this opportunity to comment on proposed and/or continuing information collections, as required by the Paperwork Reduction Act of 1995, Public Law 104–13 (44 U.S.C. 3506(c)(2)(A)). Currently, the IRS is soliciting comments Notice 2009–90, Production Tax Credit for Refined Coal.

DATES: Written comments should be received on or before June 10, 2013 to be assured of consideration.

ADDRESSES: Direct all written comments to Yvette Lawrence, Internal Revenue Service, Room 6129, 1111 Constitution Avenue NW., Washington, DC 20224.

FOR FURTHER INFORMATION CONTACT: Requests for additional information or copies of notice should be directed to Allan Hopkins, at (202) 622–6665, or at Internal Revenue Service, Room 6129, 1111 Constitution Avenue NW., Washington, DC 20224, or through the internet, at *Allan.M.Hopkins@irs.gov*.

SUPPLEMENTARY INFORMATION:

Title: Production Tax Credit for Refined Coal.

OMB Number: 1545–2158.

Notice Number: Notice 2009–90.

Abstract: This notice sets forth interim guidance pending the issuance of regulations relating to the tax credit under § 45 of the Internal Revenue Code (Code) for refined coal.

Current Actions: Extension of currently approved collection. There are no changes being made to the notice at this time.

Type of Review: Extension of currently approved collection.

Affected Public: Business and for-profit.

Estimated Number of Respondents: 100.

Estimated Average Time per Respondent: 15 hours.

Estimated Total Annual Burden Hours: 1,500 hrs.

The following paragraph applies to all of the collections of information covered by this notice:

An agency may not conduct or sponsor, and a person is not required to respond to, a collection of information unless the collection of information displays a valid OMB control number. Books or records relating to a collection of information must be retained as long as their contents may become material in the administration of any internal revenue law. Generally, tax returns and tax return information are confidential, as required by 26 U.S.C. 6103.

Request for Comments: Comments submitted in response to this notice will be summarized and/or included in the request for OMB approval. All comments will become a matter of public record. Comments are invited on: (a) Whether the collection of information is necessary for the proper performance of the functions of the agency, including whether the information shall have practical utility; (b) the accuracy of the agency's estimate of the burden of the collection of information; (c) ways to enhance the quality, utility, and clarity of the information to be collected; (d) ways to minimize the burden of the collection of information on respondents, including through the use of automated collection techniques or other forms of information technology; and (e) estimates of capital or start-up costs and costs of operation, maintenance, and purchase of services to provide information.

Approved: March 25, 2013.

Yvette Lawrence,

IRS Reports Clearance Officer.

[FR Doc. 2013–08294 Filed 4–9–13; 8:45 am]

BILLING CODE 4830–01–P

DEPARTMENT OF THE TREASURY

Internal Revenue Service

Proposed Collection; Comment Request for Form 8275 and 8275–R

AGENCY: Internal Revenue Service (IRS), Treasury.

ACTION: Notice and request for comments.

SUMMARY: The Department of the Treasury, as part of its continuing effort to reduce paperwork and respondent burden, invites the general public and other Federal agencies to take this opportunity to comment on proposed and/or continuing information collections, as required by the Paperwork Reduction Act of 1995, Public Law 104–13(44 U.S.C. 3506(c)(2)(A)). Currently, the IRS is soliciting comments concerning Form 8275, Disclosure Statement, and Form 8275–R, Regulation Disclosure Statement.

DATES: Written comments should be received on or before June 10, 2013 to be assured of consideration.

ADDRESSES: Direct all written comments to Yvette Lawrence, Internal Revenue Service, Room 6129, 1111 Constitution Avenue NW., Washington, DC 20224.

FOR FURTHER INFORMATION CONTACT: Requests for additional information or copies of the form and instructions should be directed to Allan Hopkins at Internal Revenue Service, room 6129, 1111 Constitution Avenue NW., Washington, DC 20224, or at (202) 622–6665, or through the internet at *Allan.M.Hopkins@irs.gov*.

SUPPLEMENTARY INFORMATION:

Title: Disclosure Statement (Form 8275) and Regulation Disclosure Statement (Form 8275–R).

OMB Number: 1545–0889.

Form Number: Forms 8275 and 8275–R.

Abstract: Internal Revenue Code section 6662 imposes accuracy-related penalties on taxpayers for substantial understatement of tax liability or negligence or disregard of rules and regulations. Code section 6694 imposes similar penalties on return preparers. Regulations sections 1.662–4(e) and (f) provide for reduction of these penalties if adequate disclosure of the tax treatment is made on Form 8275 or, if the position is contrary to regulation on Form 8275–R.

Current Actions: There are no changes to the form at this time.

Type of Review: Extension of a currently approved collection.

Affected Public: Business or other for-profit organizations and individuals, not-for-profit institutions, and farms.

Estimated Number of Responses: 666,666.

Estimated Time per Response: 5 hours, 34 minutes.

Estimated Total Annual Burden Hours: 3,716,664.

The following paragraph applies to all of the collections of information covered by this notice:

An agency may not conduct or sponsor, and a person is not required to respond to, a collection of information unless the collection of information displays a valid OMB control number. Books or records relating to a collection of information must be retained as long as their contents may become material in the administration of any internal revenue law. Generally, tax returns and tax return information are confidential, as required by 26 U.S.C. 6103.

Request for Comments: Comments submitted in response to this notice will be summarized and/or included in the request for OMB approval. All comments will become a matter of public record. Comments are invited on: (a) Whether the collection of information is necessary for the proper performance of the functions of the agency, including whether the information shall have practical utility; (b) the accuracy of the agency's estimate of the burden of the collection of information; (c) ways to enhance the quality, utility, and clarity of the information to be collected; (d) ways to minimize the burden of the collection of information on respondents, including through the use of automated collection techniques or other forms of information technology; and (e) estimates of capital or start-up costs and costs of operation, maintenance, and purchase of services to provide information.

Approved: March 22, 2013.

Yvette Lawrence,

IRS Supervisory Tax Analyst.

[FR Doc. 2013–08299 Filed 4–9–13; 8:45 am]

BILLING CODE 4830–01–P

DEPARTMENT OF THE TREASURY

Internal Revenue Service

Proposed Collection; Comment Request for Regulation Project

AGENCY: Internal Revenue Service (IRS), Treasury.

ACTION: Notice and request for comments.

SUMMARY: The Department of the Treasury, as part of its continuing effort to reduce paperwork and respondent burden, invites the general public and other Federal agencies to take this opportunity to comment on proposed and/or continuing information collections, as required by the Paperwork Reduction Act of 1995, Public Law 104–13 (44 U.S.C. 3506(c)(2)(A)). Currently, the IRS is soliciting comments concerning notional principal contracts; contingent nonperiodic payments.

DATES: Written comments should be received on or before June 10, 2013 to be assured of consideration.

ADDRESSES: Direct all written comments to Yvette Lawrence, Internal Revenue Service, Room 6129, 1111 Constitution Avenue NW., Washington, DC 20224.

FOR FURTHER INFORMATION CONTACT: Requests for additional information or copies of the form and instructions should be directed to Allan Hopkins, (202) 622–6665, at Internal Revenue Service, Room 6129, 1111 Constitution Avenue NW., Washington, DC 20224, or through the internet at *Allan.M.Hopkins@irs.gov.*

SUPPLEMENTARY INFORMATION:

Title: Notional Principal Contracts; Contingent Nonperiodic Payments.

OMB Number: 1545–1876.

Form Number: REG–166012–02.

Abstract: The collection of information in the proposed regulations is in § 1.446–3(g)(6)(vii) of the Income Tax Regulations, requiring Taxpayers to maintain in their books and records a description of the method used to determine the projected amount of a contingent payment, the projected payment schedules, and the adjustments taken into account under the proposed regulations. The information is required by the IRS to verify compliance with section 446 of the Internal Revenue Code and the method of accounting described in § 1.446–3(g)(6). This information will be used to determine whether the amount of tax has been calculated correctly. The collection of information is required to properly determine the amount of income or deduction to be taken into account. The respondents are sophisticated investors that enter into notional principal contracts with contingent nonperiodic payments.

Current Actions: There is no change in the paperwork burden previously approved by OMB. This is being submitted for renewal purposes only.

Type of Review: Extension of a currently approved collection.

Affected Public: Individuals and Households, Businesses and other for-profit organizations.

Estimated Number of Respondents: 4,250.

Estimated Time Per Respondent: 6 hours.

Estimated Total Annual Burden Hours: 25,500.

The following paragraph applies to all of the collections of information covered by this notice:

An agency may not conduct or sponsor, and a person is not required to respond to, a collection of information unless the collection of information displays a valid OMB control number. Books or records relating to a collection of information must be retained as long as their contents may become material in the administration of any internal revenue law. Generally, tax returns and tax return information are confidential, as required by 26 U.S.C. 6103.

Request for Comments: Comments submitted in response to this notice will be summarized and/or included in the request for OMB approval. All comments will become a matter of public record. Comments are invited on: (a) Whether the collection of information is necessary for the proper performance of the functions of the agency, including whether the information shall have practical utility; (b) the accuracy of the agency's estimate of the burden of the collection of information; (c) ways to enhance the quality, utility, and clarity of the information to be collected; (d) ways to minimize the burden of the collection of information on respondents, including through the use of automated collection techniques or other forms of information technology; and (e) estimates of capital or start-up costs and costs of operation, maintenance, and purchase of services to provide information.

Approved: March 22, 2013.

Yvette Lawrence,

IRS Reports Clearance Officer.

[FR Doc. 2013–08295 Filed 4–9–13; 8:45 am]

BILLING CODE 4830–01–P

DEPARTMENT OF VETERANS AFFAIRS

[OMB Control No. 2900–New]

Proposed Information Collection (Women Veterans Healthcare Barriers Survey)

AGENCY: Veterans Health Administration, Department of Veterans Affairs.

ACTION: Notice.

SUMMARY: In compliance with the Paperwork Reduction Act (PRA) of 1995 (44 U.S.C. 3501–21), this notice announces that the Veterans Health Administration (VHA), Department of Veterans Affairs, will submit the collection of information abstracted below to the Office of Management and Budget (OMB) for review and comment. The PRA submission describes the nature of the information collection and its expected cost and burden; it includes the actual data collection instrument.

DATES: Comments must be submitted on or before May 10, 2013.

ADDRESSES: Submit written comments on the collection of information through *www.Regulations.gov;* or to VA's OMB Desk Officer, OMB Human Resources and Housing Branch, New Executive Office Building, Room 10235, Washington, DC 20503 (202) 395–7316. Please refer to ''OMB Control No. 2900–NEW, Women Veterans Healthcare Barriers Survey'' in any correspondence.

FOR FURTHER INFORMATION CONTACT: Crystal Rennie, Enterprise Records Service (005R1B), Department of Veterans Affairs, 810 Vermont Avenue NW., Washington, DC 20420, (202) 632–7492, fax (202) 632–7583 or email *crystal.rennie@va.gov.* Please refer to ''OMB Control No. 2900–NEW, Women Veterans Healthcare Barriers Survey.''

SUPPLEMENTARY INFORMATION:

Title: Women Veterans Healthcare Barriers Survey.

OMB Control Number: 2900–New (Women Veterans Healthcare Barriers Survey).

Type of Review: New data collection.

Abstract: Women Veterans comprise one of the fastest growing subpopulations of Veterans. Today, there are more than 1.8 million living women Veterans, more than 500,000 of whom have enrolled in the VA Health Care System. Over the last decade, the number of women Veterans using VA health care has nearly doubled. VA is responding by improving access and services for women. The study will help us better understand barriers women Veterans face accessing VA care, the comprehensiveness of care, and improve our understanding of the long-term consequences of military deployment. The data collected will allow VA to plan and provide better health care for women Veterans and to support reports to Congress about the status of women Veterans' health care.

An agency may not conduct or sponsor, and a person is not required to respond to a collection of information unless it displays a currently valid OMB control number. The **Federal Register** Notice with a 60-day comment period soliciting comments on this collection of information was published on January 23, 2013, at page 4983.

Affected Public: Individuals or households.

Estimated Annual Burden: 5,600 hours.

Estimated Average Burden per Respondent: 40 minutes.

Frequency of Response: One time.

Estimated Number of Respondents: 8,400.

Dated: April 4, 2013.

By direction of the Secretary.

Robert C. McFetridge,

Director, Office of Regulations Policy and Management, Office of the General Counsel, Department of Veterans Affairs.

[FR Doc. 2013–08284 Filed 4–9–13; 8:45 am]

BILLING CODE 8320–01–P

Reader Aids

Federal Register

Vol. 78, No. 69

Wednesday, April 10, 2013

CUSTOMER SERVICE AND INFORMATION

Federal Register/Code of Federal Regulations	
General Information, indexes and other finding aids	**202–741–6000**
Laws	**741–6000**
Presidential Documents	
Executive orders and proclamations	**741–6000**
The United States Government Manual	**741–6000**
Other Services	
Electronic and on-line services (voice)	**741–6020**
Privacy Act Compilation	**741–6064**
Public Laws Update Service (numbers, dates, etc.)	**741–6043**
TTY for the deaf-and-hard-of-hearing	**741–6086**

ELECTRONIC RESEARCH

World Wide Web

Full text of the daily Federal Register, CFR and other publications is located at: **www.fdsys.gov.**

Federal Register information and research tools, including Public Inspection List, indexes, and links to GPO Access are located at: **www.ofr.gov.**

E-mail

FEDREGTOC-L (Federal Register Table of Contents LISTSERV) is an open e-mail service that provides subscribers with a digital form of the Federal Register Table of Contents. The digital form of the Federal Register Table of Contents includes HTML and PDF links to the full text of each document.

To join or leave, go to **http://listserv.access.gpo.gov** and select *Online mailing list archives, FEDREGTOC-L, Join or leave the list (or change settings);* then follow the instructions.

PENS (Public Law Electronic Notification Service) is an e-mail service that notifies subscribers of recently enacted laws.

To subscribe, go to **http://listserv.gsa.gov/archives/publaws-l.html** and select *Join or leave the list (or change settings);* then follow the instructions.

FEDREGTOC-L and **PENS** are mailing lists only. We cannot respond to specific inquiries.

Reference questions. Send questions and comments about the Federal Register system to: **fedreg.info@nara.gov**

The Federal Register staff cannot interpret specific documents or regulations.

Reminders. Effective January 1, 2009, the Reminders, including Rules Going Into Effect and Comments Due Next Week, no longer appear in the Reader Aids section of the Federal Register. This information can be found online at **http://www.regulations.gov.**

CFR Checklist. Effective January 1, 2009, the CFR Checklist no longer appears in the Federal Register. This information can be found online at **http://bookstore.gpo.gov/.**

FEDERAL REGISTER PAGES AND DATE, APRIL

19393–19584 1
19585–19978 2
19979–20212 3
20213–20408 4
20409–20782 5
20783–21014 8
21015–21210 9
21211–21502 10

CFR PARTS AFFECTED DURING APRIL

At the end of each month the Office of the Federal Register publishes separately a List of CFR Sections Affected (LSA), which lists parts and sections affected by documents published since the revision date of each title.

3 CFR

Proclamations:
8948 20213
8949 20215
8950 20217
8951 20219
8952 20221
8953 20223
8954 20409

Executive Orders:
13639 19979
13640 21211

Administrative Orders:
Memorandums:
Memo. of May 31, 2011 (revoked by Memo. of March 29, 2013) 20225
Memo. of March 29, 2013 20225
Memo. of April 5, 2013 21213

5 CFR

Proposed Rules:
733 20497
950 20820

7 CFR

272 20411
1437 21015
3201 .....19393, 20783

8 CFR

1292 19400

10 CFR

430 21215

Proposed Rules:
2 20498
50 21275
52 21275
429 .....19606, 20832
430 .....19606, 20502, 20832, 20842
431 20503

12 CFR

Ch. X 21218
240 21019
242 20756
272 19981
615 21035
621 21035
652 21035

14 CFR

25 .....19981, 21037
33 19982
39 .....19983, 20227, 20229, 20234, 21227, 21230, 21233, 21236
71 .....19985, 21043, 21044
95 20783
97 .....21239, 21242
1209 20422

Proposed Rules:
39 .....19628, 20503, 20505, 20507, 20509, 20844, 21072, 21074, 21077, 21079, 21082, 21276, 21279
71 .....20846, 21084
121 19630

16 CFR

Proposed Rules:
1112 20511
1226 20511

17 CFR

1 21045
3 20788
23 .....20788, 21045
240 21046
249 21046

Proposed Rules:
23 20848

18 CFR

154 19409
376 21245

19 CFR

351 21246

20 CFR

Proposed Rules:
638 19632
670 19632

21 CFR

73 19413
510 .....19986, 21058
520 21058
522 .....19986, 21058
524 21058
526 21058
529 21058
558 .....19986, 21058
600 19585

Proposed Rules:
Ch. I 21085
876 20268
882 20268
892 20268

23 CFR

Proposed Rules:
771 20074

25 CFR

518 20236
581 21060
584 21060

585 21060

26 CFR

Proposed Rules:
1 ....19950, 20523
53 20523

27 CFR

Proposed Rules:
9 20544

29 CFR

Proposed Rules:
15 19632
4000 20039
4001 20039
4043 20039
4204 20039
4206 20039
4231 20039

30 CFR

250 20423
1206 20244
Proposed Rules:
701 20394
736 20394
737 20394
738 20394
750 20394

32 CFR

103 20443
226 21256

33 CFR

100 21258
117 ....19415, 19585, 20451, 21063, 21064
165 ....19988, 20454, 20792, 21260
Proposed Rules:
100 ....19632, 20066, 20277, 20849
101 ....20289, 20558
104 ....20289, 20558
105 ....20289, 20558
106 ....20289, 20558
165 ....19431, 20277, 20559, 20852

34 CFR

Proposed Rules:
Ch. III 20069

36 CFR

Proposed Rules:
1280 20563

37 CFR

1 ....19416, 20180
2 20180
7 20180
10 20180
11 20180
41 20180

38 CFR

17 19586
59 21262

40 CFR

52 ....19421, 19596, 19599, 19602, 19990, 19991, 19994, 19998, 20001, 20244, 20793, 21065
63 20246
70 19602
81 20001
82 20004
98 19605
131 20252
180 ....20029, 20032, 20461, 21267
239 20035
258 20035
Proposed Rules:
52 ....19434, 19636, 20290, 20855, 20856, 20868, 21281, 21296, 21302
70 19636
80 20881
81 ....20856, 20868
98 19802
239 20073
258 20073
450 19434

42 CFR

68 20466
433 19918
Proposed Rules:
411 21308
488 20564
489 20564
1001 21314

44 CFR

67 ....21272, 21273

45 CFR

60 20473
61 20473
Proposed Rules:
155 20581

47 CFR

1 19424
22 19424
24 19424
27 19424
54 20796
76 20255
90 19424
Proposed Rules:
15 21320
20 19442
73 21337

49 CFR

Proposed Rules:
575 20597
622 20074

50 CFR

217 20800
635 20258
648 ....20037, 20260, 21071
679 20037
Proposed Rules:
17 ....20074, 21086
20 21200
216 20604
223 20718
224 20718
600 20291
622 ....20292, 20496

LIST OF PUBLIC LAWS

This is a continuing list of public bills from the current session of Congress which have become Federal laws. It may be used in conjunction with "P L U S" (Public Laws Update Service) on 202–741–6043. This list is also available online at *http://www.archives.gov/federal-register/laws*.

The text of laws is not published in the **Federal Register** but may be ordered in "slip law" (individual pamphlet) form from the Superintendent of Documents, U.S. Government Printing Office, Washington, DC 20402 (phone, 202–512–1808). The text will also be made available on the Internet from GPO's Federal Digital System (FDsys) at *http://www.gpo.gov/fdsys*. Some laws may not yet be available.

H.R. 933/P.L. 113–6
Consolidated and Further Continuing Appropriations Act, 2013 (Mar. 26, 2013; 127 Stat. 198)

Last List March 15, 2013

Public Laws Electronic Notification Service (PENS)

PENS is a free electronic mail notification service of newly enacted public laws. To subscribe, go to *http://listserv.gsa.gov/archives/publaws-l.html*

Note: This service is strictly for E-mail notification of new laws. The text of laws is not available through this service. **PENS** cannot respond to specific inquiries sent to this address.