AUTHENTICATED
U.S. GOVERNMENT
INFORMATION
GPO

FEDERAL REGISTER

Vol. 78 Thursday,
No. 60 March 28, 2013

Pages 18763–19076

OFFICE OF THE FEDERAL REGISTER

The **FEDERAL REGISTER** (ISSN 0097–6326) is published daily, Monday through Friday, except official holidays, by the Office of the Federal Register, National Archives and Records Administration, Washington, DC 20408, under the Federal Register Act (44 U.S.C. Ch. 15) and the regulations of the Administrative Committee of the Federal Register (1 CFR Ch. I). The Superintendent of Documents, U.S. Government Printing Office, Washington, DC 20402 is the exclusive distributor of the official edition. Periodicals postage is paid at Washington, DC.

The **FEDERAL REGISTER** provides a uniform system for making available to the public regulations and legal notices issued by Federal agencies. These include Presidential proclamations and Executive Orders, Federal agency documents having general applicability and legal effect, documents required to be published by act of Congress, and other Federal agency documents of public interest.

Documents are on file for public inspection in the Office of the Federal Register the day before they are published, unless the issuing agency requests earlier filing. For a list of documents currently on file for public inspection, see *www.ofr.gov.*

The seal of the National Archives and Records Administration authenticates the Federal Register as the official serial publication established under the Federal Register Act. Under 44 U.S.C. 1507, the contents of the **Federal Register** shall be judicially noticed.

The **Federal Register** is published in paper and on 24x microfiche. It is also available online at no charge at *www.fdsys.gov*, a service of the U.S. Government Printing Office.

The online edition of the **Federal Register** is issued under the authority of the Administrative Committee of the Federal Register as the official legal equivalent of the paper and microfiche editions (44 U.S.C. 4101 and 1 CFR 5.10). It is updated by 6:00 a.m. each day the **Federal Register** is published and includes both text and graphics from Volume 59, 1 (January 2, 1994) forward. For more information, contact the GPO Customer Contact Center, U.S. Government Printing Office. Phone 202-512-1800 or 866-512-1800 (toll free). E-mail, *gpo@custhelp.com.*

The annual subscription price for the **Federal Register** paper edition is $749 plus postage, or $808, plus postage, for a combined **Federal Register, Federal Register** Index and List of CFR Sections Affected (LSA) subscription; the microfiche edition of the **Federal Register** including the **Federal Register** Index and LSA is $165, plus postage. Six month subscriptions are available for one-half the annual rate. The prevailing postal rates will be applied to orders according to the delivery method requested. The price of a single copy of the daily **Federal Register,** including postage, is based on the number of pages: $11 for an issue containing less than 200 pages; $22 for an issue containing 200 to 400 pages; and $33 for an issue containing more than 400 pages. Single issues of the microfiche edition may be purchased for $3 per copy, including postage. Remit check or money order, made payable to the Superintendent of Documents, or charge to your GPO Deposit Account, VISA, MasterCard, American Express, or Discover. Mail to: U.S. Government Printing Office—New Orders, P.O. Box 979050, St. Louis, MO 63197-9000; or call toll free 1-866-512-1800, DC area 202-512-1800; or go to the U.S. Government Online Bookstore site, see *bookstore.gpo.gov.*

There are no restrictions on the republication of material appearing in the **Federal Register.**

How To Cite This Publication: Use the volume number and the page number. Example: 77 FR 12345.

Postmaster: Send address changes to the Superintendent of Documents, Federal Register, U.S. Government Printing Office, Washington, DC 20402, along with the entire mailing label from the last issue received.

SUBSCRIPTIONS AND COPIES

PUBLIC

Subscriptions:

Paper or fiche	**202–512–1800**
Assistance with public subscriptions	**202–512–1806**

General online information **202–512–1530; 1–888–293–6498**

Single copies/back copies:

Paper or fiche	**202–512–1800**
Assistance with public single copies	**1–866–512–1800 (Toll-Free)**

FEDERAL AGENCIES

Subscriptions:

Paper or fiche	**202–741–6005**
Assistance with Federal agency subscriptions	**202–741–6005**

FEDERAL REGISTER WORKSHOP

THE FEDERAL REGISTER: WHAT IT IS AND HOW TO USE IT

FOR: Any person who uses the Federal Register and Code of Federal Regulations.

WHO: Sponsored by the Office of the Federal Register.

WHAT: Free public briefings (approximately 3 hours) to present:

1. The regulatory process, with a focus on the Federal Register system and the public's role in the development of regulations.
2. The relationship between the Federal Register and Code of Federal Regulations.
3. The important elements of typical Federal Register documents.
4. An introduction to the finding aids of the FR/CFR system.

WHY: To provide the public with access to information necessary to research Federal agency regulations which directly affect them. There will be no discussion of specific agency regulations.

WHEN: Tuesday, April 9, 2013
9 a.m.–12:30 p.m.

WHERE: Office of the Federal Register
Conference Room, Suite 700
800 North Capitol Street, NW.
Washington, DC 20002

RESERVATIONS: (202) 741–6008

Printed on recycled paper.

Contents

Federal Register

Vol. 78, No. 60

Thursday, March 28, 2013

Actuaries, Joint Board for Enrollment
See Joint Board for Enrollment of Actuaries

Agricultural Marketing Service
PROPOSED RULES
Oranges, Grapefruit, Tangerines, and Tangelos Grown in Florida:
Hearing on Amendment of Marketing Order No.905, 18899–18902
User Fees for 2013 Crop Cotton Classification Services to Growers, 18898–18899

Agriculture Department
See Agricultural Marketing Service

Air Force Department
NOTICES
Agency Information Collection Activities; Proposals, Submissions, and Approvals, 18966–18967

Antitrust Division
NOTICES
Membership Changes under National Cooperative Research and Production Act:
International Association of Plumbing and Mechanical Officials, 19009
Sematech, Inc. d/b/a International Sematech, 19009

Antitrust
See Antitrust Division

Bonneville Power Administration
NOTICES
Environmental Impact Statements; Availability, etc.:
Walla Walla Basin Spring Chinook Hatchery; Floodplain and Wetlands Assessment, 18967–18968

Bureau of Consumer Financial Protection
RULES
Truth in Lending (Regulation Z), 18795–18798
PROPOSED RULES
Defining Larger Participants of Student Loan Servicing Market, 18902–18917

Centers for Disease Control and Prevention
NOTICES
Agency Information Collection Activities; Proposals, Submissions, and Approvals, 18983–18987
Statements of Organization, Functions, and Delegations of Authority, 18987

Coast Guard
RULES
Drawbridge Operations:
Atlantic Intracoastal Waterway, Wrightsville Beach, NC, and Northeast Cape Fear River, at Wilmington, NC, 18848
Saugus River, Saugus and Lynn, MA, 18849
PROPOSED RULES
Drawbridge Operations:
Upper Mississippi River, Rock Island, IL; Deviation, 18933

Commerce Department
See Industry and Security Bureau
See International Trade Administration
See National Institute of Standards and Technology
See National Oceanic and Atmospheric Administration
See National Telecommunications and Information Administration
NOTICES
Incentives to Adopt Improved Cybersecurity Practices, 18954–18955

Community Development Financial Institutions Fund
NOTICES
Agency Information Collection Activities; Proposals, Submissions, and Approvals, 19074–19075

Consumer Product Safety Commission
NOTICES
Agency Information Collection Activities; Proposals, Submissions, and Approvals:
Safety Standard for Cigarette Lighters, 18965–18966

Court Services and Offender Supervision Agency for the District of Columbia
NOTICES
Service Contract Inventories:
Fiscal Year 2012, 18966

Defense Acquisition Regulations System
RULES
Defense Federal Acquisition Regulation Supplement:
New Free Trade Agreement with Colombia, 18877
Proposal Adequacy Checklist, 18865–18876
Specialty Metals—Definition of Produce, 18877–18879
United States–Korea Free Trade Agreement, 18876

Defense Department
See Air Force Department
See Defense Acquisition Regulations System
See Navy Department

Drug Enforcement Administration
NOTICES
Decisions and Orders:
Gary Alfred Shearer, M.D., 19009–19012
Pawan Kumar Jain, M.D., 19012–19015
Importers of Controlled Substances; Applications:
SA INTL GMBH C/O., Sigma Aldrich Co. LLC, St. Louis, MO, 19015–19016
Stepan Co., Maywood, NJ, 19015
Importers of Controlled Substances; Registrations:
Johnson Matthey, Inc., West Deptford, NJ, 19016
Mylan Pharmaceuticals, Inc., Morgantown, WV, 19016
Manufacturers of Controlled Substances; Applications:
Johnson Matthey Pharmaceutical Materials, Inc., Devens, MA, 19017
Patheon Pharmaceuticals, Inc., Cincinnati, OH, 19016
Manufacturers of Controlled Substances; Registrations:
Siemens Healthcare Diagnostics Inc., Newark, DE, 19017

Education Department
PROPOSED RULES
Proposed Priority; National Institute on Disability and Rehabilitation Research:
Advanced Rehabilitation Research Training Program, 18933–18935

Employment and Training Administration
NOTICES
Agency Information Collection Activities; Proposals, Submissions, and Approvals:
Program Reporting and Performance Standards System for Indian and Native American Programs, 19018–19019
Labor Certification Process for Temporary Employment of Aliens in Agriculture:
Prevailing Wage Rates for Certain Occupations; Correction and Rescission, 19019–19021

Energy Department
See Bonneville Power Administration
See Federal Energy Regulatory Commission
See Southeastern Power Administration

Environmental Protection Agency
RULES
Implementation Plan Revisions; Disapprovals:
State of California; South Coast VMT Emissions Offset Demonstrations, 18849–18853
State Implementation Plans:
California, South Coast Air Quality Management District; Revision, 18853–18855
PROPOSED RULES
State Implementation Plans:
California, South Coast Air Quality Management Plan; Revision, 18936
NOTICES
Agency Information Collection Activities; Proposals, Submissions, and Approvals:
NSPS for Pressure Sensitive Tape and Label Surface Coating Operations, 18977
Meetings:
Human Studies Review Board; Public Webinar/Teleconference, 18978–18979
Proposed Settlement Agreements under Clean Air Act Citizen Suit, 18979–18981

Executive Office of the President
See Presidential Documents

Federal Aviation Administration
RULES
Class E Airspace; Amendments:
Decorah, IA, 18800–18801
Superior, WI, 18799–18800
West Union, IA, 18798–18799
Class E Airspace; Establishment:
Beeville, TX, 18801–18802
Tecumseh, NE, 18802–18803
Standard Instrument Approach Procedures, and Takeoff Minimums and Obstacle Departure Procedures:
Miscellaneous Amendments, 18803–18808
PROPOSED RULES
Airworthiness Directives:
Airbus Airplanes, 18925–18928
Austro Engine GmbH Engines, 18920–18922
The Boeing Company Airplanes, 18917–18920, 18922–18925
Class E Airspace; Amendments:
Tuskegee, AL, 18928–18929
Class E Airspace; Establishment:
Bass Harbor, ME, 18931–18932
Boothbay, ME, 18929–18931
Unmanned Aircraft Systems Test Site Program, Privacy Approach; Meeting, 18932–18933
NOTICES
Airworthiness Approval for Aircraft Forward-Looking Windshear and Turbulence Radar Systems, 19063

Federal Energy Regulatory Commission
RULES
Revisions to Reliability Standard for Transmission Vegetation Management, 18817–18837
NOTICES
Applications:
Natural Gas Pipeline Co. of America LLC, 18968–18969
Combined Filings, 18969–18970
Environmental Impact Statements; Availability, etc.:
Trunkline LNG Co., LLC, et al.; Lake Charles Liquefaction Project, 18970–18972
Initial Market-Based Rate Filings Including Requests for Blanket Section 204 Authorizations:
Alta Wind X, LLC, 18972–18973
Alta Wind XI, LLC, 18973
DTE Stockton, LLC, 18973
Petitions for Rate Approval:
Bridgeline Holdings, LP, 18973–18974
ONEOK Texas Gas Storage, LLC, 18974
Technical Conferences:
Increasing Market and Planning Efficiency through Improved Software, 18974–18975

Federal Highway Administration
NOTICES
Buy America Waivers, 19063–19064

Fish and Wildlife Service
PROPOSED RULES
Endangered and Threatened Wildlife and Plants:
12-Month Finding on a Petition to List Rosemont Talussnail, 18936–18938
Listing as Endangered and Designation of Critical Habitat for Acuna Cactus and Fickeisen Plains Cactus, 18938–18943
Listing as Endangered and Designation of Critical Habitat for Gierisch Mallow, 18943–18947
NOTICES
Comprehensive Conservation Plans and Environmental Assessments; Availability, etc.:
Montezuma National Wildlife Refuge, Cayuga, Seneca, and Wayne Counties, NY, 19000–19002
Marine Mammal Protection Act:
Draft Revised Stock Assessment Reports for Two Stocks of West Indian Manatee, 19002–19004

Food and Drug Administration
NOTICES
Guidance for Industry and Staff; Availability:
Establishing Performance Characteristics of In Vitro Diagnostic Devices for the Detection of Antibodies to Borrelia Burgdorferi, 18988

Foreign Assets Control Office
NOTICES
Blocking and Unblocking of Persons and Property:
Identification of One Individual, Fourteen Entities, and Eight Vessels Pursuant to Iranian Sanctions, 19075–19076

General Services Administration
NOTICES
Agency Information Collection Activities; Proposals, Submissions, and Approvals:
General Services Administration Acquisition Regulation; Proposal to Lease Space, 18981–18982
Maximum Per Diem Rates:
States of Oklahoma and Texas, 18982

Geological Survey
NOTICES
Meetings:
Scientific Earthquake Studies Advisory Committee, 19004

Health and Human Services Department
See Centers for Disease Control and Prevention
See Food and Drug Administration
See Health Resources and Services Administration
See Indian Health Service
See National Institutes of Health
RULES
World Trade Center Health Program Eligibility Requirements:
Shanksville, PA and Pentagon Responders, 18855–18865
NOTICES
Agency Information Collection Activities; Proposals, Submissions, and Approvals, 18982–18983

Health Resources and Services Administration
NOTICES
Agency Information Collection Activities; Proposals, Submissions, and Approvals, 18988–18989
Part C Early Intervention Services Grants:
Ryan White HIV/AIDS Program, 18989–18990

Homeland Security Department
See Coast Guard
See U.S. Customs and Border Protection

Indian Affairs Bureau
NOTICES
Agency Information Collection Activities; Proposals, Submissions, and Approvals:
Acquisition of Trust Land, 19004–19005
Tribal Energy Resource Agreements, 19005
Service Area Designations, 19005–19006

Indian Health Service
See Indian Health Service
NOTICES
Cooperative Agreements:
Medical Professionals Recruitment and Continuing Education Programs, 18990–18995

Industry and Security Bureau
RULES
Additions of Certain Persons to the Entity List:
Removal of Person from the Entity List Based on Removal Request; Implementation of Entity List Annual Review Changes, 18808–18814
Export Administration Regulations:
List of Items Classified Under Export Control Classification 0Y521 Series – Biosensor Systems, 18814–18817

Interior Department
See Fish and Wildlife Service
See Geological Survey
See Indian Affairs Bureau
See National Park Service

International Trade Administration
NOTICES
Antidumping Duty Administrative Reviews; Results, Extensions, Amendments, etc.:
Sodium Hexametaphosphate from the People's Republic of China, 18956–18957
Antidumping Duty New Shipper Reviews; Results, Extensions, Amendments, etc.:
Certain Frozen Fish Fillets from the Socialist Republic of Vietnam, 18957–18958
Antidumping Duty Orders; Results, Extensions, Amendments, etc.:
Certain Frozen Warmwater Shrimp from People's Republic of China and Diamond Sawblades and Parts Thereof from People's Republic of China, 18958–18960

International Trade Commission
NOTICES
Investigations:
Certain Products Having Laminated Packaging, and Components Thereof, 19007–19008

Joint Board for Enrollment of Actuaries
NOTICES
Meetings:
Advisory Committee on Actuarial Examinations, 19008–19009

Justice Department
See Antitrust Division
See Drug Enforcement Administration

Labor Department
See Employment and Training Administration
See Mine Safety and Health Administration
NOTICES
Agency Information Collection Activities; Proposals, Submissions, and Approvals:
Annual Funding Notice for Defined Benefit Pension Plans, 19017–19018

Maritime Administration
NOTICES
Requests for Administrative Waivers of Coastwise Trade Laws:
Vessel CHI, 19064–19065
Vessel FRANK S. CRESSEY, 19066–19067
Vessel GOLDEN BOY II, 19068
Vessel MARAE, 19067
Vessel MI CASA, 19066
Vessel NAUTILE, 19064
Vessel SCOUT, 19065–19066
Vessel VANESSA, 19065
Vessel WILDCAT, 19068–19069

Mine Safety and Health Administration
NOTICES
Petitions for Modification of Application of Existing Mandatory Safety Standards, 19021–19024

National Institute of Standards and Technology
NOTICES
Incentives to Adopt Improved Cybersecurity Practices, 18954–18955

National Institutes of Health
NOTICES
Meetings:
Eunice Kennedy Shriver National Institute of Child Health and Human Development, 18996–18999
National Heart, Lung, and Blood Institute, 18995–18996
National Institute of Allergy and Infectious Diseases, 18996
National Institute of Environmental Health Sciences, 18997
National Institute of Neurological Disorders and Stroke, 18996–18997
Prospective Grants of Start-Up Exclusive Licenses:
Photosensitizing Antibody—Fluorophore Conjugates for Photoimmunotherapy, 18999

National Oceanic and Atmospheric Administration
RULES
Fisheries of the Exclusive Economic Zone Off Alaska:
Pacific Cod by Catcher Vessels Less Than 60 feet in Bogoslof Exemption Area, Bering Sea and Aleutian Islands, 18896–18897
Fisheries off West Coast States:
Pacific Coast Groundfish Fishery; Trawl Rationalization Program; Reconsideration of Allocation of Whiting, 18879–18896
PROPOSED RULES
Fisheries of the Northeastern United States:
Tilefish Fishery Management Plan; Regulatory Amendment, Corrections, and Clarifications, 18947–18953
NOTICES
Applications for Exempted Fishing Permits:
Atlantic Coastal Fisheries Cooperative Management Act Provisions; General Provisions for Domestic Fisheries, 18960–18961
Meetings:
Gulf of Mexico Fishery Management Council, 18961–18962
New England Fishery Management Council, 18963
North Pacific Fishery Management Council; Public Workshop, 18962–18963
Permit Applications for Scientific Research and Enhancement:
Endangered and Threatened Species; Take of Anadromous Fish, 18963–18965
Takes of Marine Mammals Incidental to Specified Activities:
Exploration Drilling Program in the Chukchi Sea, AK, 18965

National Park Service
NOTICES
Agency Information Collection Activities; Proposals, Submissions, and Approvals:
Historic Preservation Certifications, 19006–19007

National Telecommunications and Information Administration
NOTICES
Incentives to Adopt Improved Cybersecurity Practices, 18954–18955

National Transportation Safety Board
NOTICES
Meetings:
Lithium Ion Batteries in Transportation Public Forum, 19024

Navy Department
RULES
Certifications and Exemptions under the International Regulations for Preventing Collisions at Sea, 1972, 18846–18848
NOTICES
Meetings:
Secretary of the Navy Advisory Panel, 18967

Personnel Management Office
NOTICES
Agency Information Collection Activities; Proposals, Submissions, and Approvals:
Application to Make Deposit or Redeposit and Application to Make Service Credit Payment for Civilian Service, 19027
CSRS/FERS Documentation in Support of Disability Retirement Application, 19026
Freedom of Information/Privacy Act Record Request Form, 19025–19026
It's Time to Sign Up for Direct Deposit or Direct Express, 19024–19025
Request to Disability Annuitant for Information on Physical Condition and Employment, 19026–19027

Postal Regulatory Commission
NOTICES
Negotiated Service Agreements, 19028–19029

Presidential Documents
PROCLAMATIONS
Charles Young Buffalo Soldiers National Monument; Establishment (Proc. 8945), 18777–18782
First State National Monument; Establishment (Proc. 8944), 18769–18776
Harriet Tubman—Underground Railroad National Monument; Establishment (Proc. 8943), 18763–18767
Rio Grande del Norte National Monument; Establishment (Proc. 8946), 18783–18787
San Juan Islands National Monument; Establishment (Proc. 8947), 18789–18793

Securities and Exchange Commission
NOTICES
Joint Industry Plans:
BATS Exchange, Inc., BATS Y-Exchange, Inc., Chicago Board Options Exchange, Inc., et al., 19029–19031
Self-Regulatory Organizations; Proposed Rule Changes:
Chicago Board Options Exchange, Inc., 19059–19062
ICE Clear Europe Ltd., 19057–19059
NASDAQ OMX BX, Inc., 19054–19057
NASDAQ OMX PHLX LLC, 19031–19034
NASDAQ Stock Market LLC, 19037–19047, 19051–19054
National Securities Clearing Corp., 19050–19051
National Stock Exchange, Inc., 19034–19037, 19047–19049

Social Security Administration
RULES
Revised Medical Criteria for Evaluating Visual Disorders, 18837–18846

Southeastern Power Administration
NOTICES
Proposed Rate Extensions and Opportunities for Public Review and Comment:
Cumberland System, 18976

State Department
NOTICES
Culturally Significant Objects Imported for Exhibition; Determinations:
Hans Richter, Encounters; Correction, 19062
Meetings:
Electronic Commerce; Department of State Advisory Committee on Private International Law, 19062–19063

Surface Transportation Board
NOTICES
Acquisition of Control:
Southfield Coinvest Holdings, LLC; Southfield Hallcon Investment Corp. and Hallcon Crew Transport Inc., et al., 19069–19070

Transportation Department
See Federal Aviation Administration
See Federal Highway Administration
See Maritime Administration
See Surface Transportation Board

Treasury Department
See Community Development Financial Institutions Fund
See Foreign Assets Control Office
NOTICES
Agency Information Collection Activities; Proposals, Submissions, and Approvals, 19070–19074

U.S. Customs and Border Protection
NOTICES
Accreditation and Approval of Commercial Gaugers and Laboratories:
SGS North America, Inc., 18999–19000

Veterans Affairs Department
NOTICES
Meetings:
Veterans' Rural Health Advisory Committee, 19076

Reader Aids

Consult the Reader Aids section at the end of this page for phone numbers, online resources, finding aids, reminders, and notice of recently enacted public laws.

To subscribe to the Federal Register Table of Contents LISTSERV electronic mailing list, go to http://listserv.access.gpo.gov and select Online mailing list archives, FEDREGTOC-L, Join or leave the list (or change settings); then follow the instructions.

CFR PARTS AFFECTED IN THIS ISSUE

A cumulative list of the parts affected this month can be found in the Reader Aids section at the end of this issue.

3 CFR

Proclamations:

8943 18763
8944 18769
8945 18777
8946 18783
8947 18789

7 CFR

Proposed Rules:

28 18898
905 18899

12 CFR

1026 18795

Proposed Rules:

1090 18902

14 CFR

71 (5 documents) 18798, 18799, 18800, 18801, 18802
97 (2 documents) 18803, 18806

Proposed Rules:

39 (4 documents) 18917, 18920, 18922, 18925
71 (3 documents) 18928, 18929, 18931
91 18932

15 CFR

744 18808
774 18814

18 CFR

40 18817

20 CFR

404 18837

32 CFR

706 18846

33 CFR

117 (2 documents) 18848, 18849

Proposed Rules:

117 18933

34 CFR

Proposed Rules:

Ch. III 18933

40 CFR

52 (2 documents) 18849, 18853

Proposed Rules:

52 18936

42 CFR

88 18855

48 CFR

215 18865
225 18876
252 (4 documents) 18865, 18876, 18877

50 CFR

660 18879
679 18896

Proposed Rules:

17 (3 documents) 18936, 18938, 18943
648 18947

Federal Register
Vol. 78, No. 60
Thursday, March 28, 2013

Presidential Documents

Title 3—

The President

Proclamation 8943 of March 25, 2013

Establishment of the Harriet Tubman—Underground Railroad National Monument

By the President of the United States of America

A Proclamation

Harriet Tubman is an American hero. She was born enslaved, liberated herself, and returned to the area of her birth many times to lead family, friends, and other enslaved African Americans north to freedom. Harriet Tubman fought tirelessly for the Union cause, for the rights of enslaved people, for the rights of women, and for the rights of all. She was a leader in the struggle for civil rights who was forever motivated by her love of family and community and by her deep and abiding faith.

Born Araminta Ross in 1822 in Dorchester County, Maryland, on the plantation where her parents were enslaved, she took the name ''Harriet'' at the time she married John Tubman, a free black man, around 1844. Harriet Tubman lived and worked enslaved in this area from her childhood until she escaped to freedom at age 27 in 1849. She returned to Dorchester County approximately 13 times to free family, friends, and other enslaved African Americans, becoming one of the most prominent ''conductors'' on the Underground Railroad. In 1859, she purchased a farm in Auburn, New York, and established a home for her family and others, which anchored the remaining years of her life. In the Civil War she supported the Union forces as a scout, spy, and nurse to African-American soldiers on battlefields and later at Fort Monroe, Virginia. After the war, she established the Harriet Tubman Home for the Aged, which institutionalized a pattern of her life—caring for African Americans in need.

In 1868, the great civil rights leader Frederick Douglass wrote to Harriet Tubman:

> I have had the applause of the crowd and the satisfaction that comes of being approved by the multitude, while the most that you have done has been witnessed by a few trembling, scarred, and foot-sore bondmen and women, whom you have led out of the house of bondage, and whose heartfelt ''God bless you'' has been your only reward. The midnight sky and the silent stars have been the witnesses of your devotion to freedom and of your heroism.

The ''midnight sky and the silent stars'' and the Dorchester County landscape of Harriet Tubman's homeland remain much as they were in her time there. If she were to return to this area today, Harriet Tubman would recognize it.

It was in the flat, open fields, marsh, and thick woodlands of Dorchester County that Tubman became physically and spiritually strong. Many of the places in which she grew up and worked still remain. Stewart's Canal at the western edge of this historic area was constructed over 20 years by enslaved and free African Americans. This 8-mile long waterway, completed in the 1830s, connected Parsons Creek and Blackwater River with Tobacco Stick Bay (known today as Madison Bay) and opened up some of Dorchester's more remote territory for timber and agricultural products to be shipped to Baltimore markets. Tubman lived near here while working for John T. Stewart. The canal, the waterways it opened to the Chesapeake

Bay, and the Blackwater River were the means of conveying goods, lumber, and those seeking freedom. And the small ports were places for connecting the enslaved with the world outside the Eastern Shore, places on the path north to freedom.

Near the canal is the Jacob Jackson Home Site, 480 acres of flat farmland, woodland, and wetland that was the site of one of the first safe houses along the Underground Railroad. Jackson was a free black man to whom Tubman appealed for assistance in 1854 in attempting to retrieve her brothers and who, because he was literate, would have been an important link in the local communication network. The Jacob Jackson Home Site has been donated to the United States.

Further reinforcing the historical significance and integrity of these sites is their proximity to other important sites of Tubman's life and work. She was born in the heart of this area at Peter's Neck at the end of Harrisville Road, on the farm of Anthony Thompson. Nearby is the farm that belonged to Edward Brodess, enslaver of Tubman's mother and her children. The James Cook Home Site is where Tubman was hired out as a child. She remembered the harsh treatment she received here, long afterward recalling that even when ill, she was expected to wade into swamps throughout the cold winter to haul muskrat traps. A few miles from the James Cook Home Site is the Bucktown Crossroads, where a slave overseer hit the 13-year-old Tubman with a heavy iron as she attempted to protect a young fleeing slave, resulting in an injury that affected Tubman for the rest of her life. A quarter mile to the north are Scotts Chapel and the associated African-American graveyard. The church was founded in 1812 as a Methodist congregation. Later, in the mid-19th century, African Americans split off from the congregation and formed Bazel Church. Across from Scotts Chapel is an African-American graveyard with headstones dating to 1792. Bazel Church is located nearby on a 1-acre clearing edged by the road and otherwise surrounded by cultivated fields and forest. According to tradition, this is where African Americans worshipped outdoors during Tubman's time.

The National Park Service has found this landscape in Dorchester County to be nationally significant because of its deep association with Tubman and the Underground Railroad. It is representative of the landscape of this region in the early and mid-19th century when enslavers and enslaved worked the farms and forests. This is the landscape where free African Americans and the enslaved led a clandestine movement of people out of slavery towards the North Star of freedom. These sites were places where enslaved and free African Americans intermingled. Moreover, these sites fostered an environment that enabled free individuals to provide aid and guidance to those enslaved who were seeking freedom. This landscape, including the towns, roads, and paths within it, and its critical waterways, was the means for communication and the path to freedom. The Underground Railroad was everywhere within it.

Much of the landscape in Dorchester County that is Harriet Tubman's homeland, including a portion of Stewart's Canal, is now part of Blackwater National Wildlife Refuge. The Refuge provides vital habitat for migratory birds, fish, and wildlife that are components of this historic landscape. Management of the Refuge by the U.S. Fish and Wildlife Service has played an important role in the protection of much of the historic landscape that was formative to Harriet Tubman's life and experiences. The Refuge has helped to conserve the landscape since 1933 and will continue to conserve, manage, and restore this diverse assemblage of wetlands, uplands, and aquatic habitats that play such an important role in telling the story of the cultural history of the area. In the midst of this landscape, the State of Maryland is developing the Harriet Tubman Underground Railroad State Park on a 17-acre parcel. The State of Maryland and the Federal Government will work closely together in managing these special places within their respective jurisdictions to preserve this critically important era in American history.

Harriet Tubman is revered by many as a freedom seeker and leader of the Underground Railroad. Although Harriet Tubman is known widely, no Federal commemorative site has heretofore been established in her honor, despite the magnitude of her contributions and her national and international stature.

WHEREAS members of the Congress, the Governor of Maryland, the City of Cambridge, and other State, local, and private interests have expressed support for the timely establishment of a national monument in Dorchester County commemorating Harriet Tubman and the Underground Railroad to protect the integrity of the evocative landscape and preserve its historic features;

WHEREAS section 2 of the Act of June 8, 1906 (34 Stat. 225, 16 U.S.C. 431) (the ''Antiquities Act''), authorizes the President, in his discretion, to declare by public proclamation historic landmarks, historic and prehistoric structures, and other objects of historic or scientific interest that are situated upon the lands owned or controlled by the Government of the United States to be national monuments, and to reserve as a part thereof parcels of land, the limits of which in all cases shall be confined to the smallest area compatible with the proper care and management of the objects to be protected;

WHEREAS it is in the public interest to preserve and protect the objects of historic and scientific interest associated with Harriet Tubman and the Underground Railroad in Dorchester County, Maryland;

NOW, THEREFORE, I, BARACK OBAMA, President of the United States of America, by the authority vested in me by section 2 of the Antiquities Act, hereby proclaim, set apart, and reserve as the Harriet Tubman—Underground Railroad National Monument (monument), the objects identified above and all lands and interests in lands owned or controlled by the Government of the United States within the boundaries described on the accompanying map, which is attached to and forms a part of this proclamation, for the purpose of protecting those objects. These reserved Federal lands and interests in lands encompass approximately 11,750 acres, which is the smallest area compatible with the proper care and management of the objects to be protected.

All Federal lands and interests in lands within the boundaries of this monument are hereby appropriated and withdrawn from all forms of entry, location, selection, sale, leasing, or other disposition under the public land laws, including withdrawal from location, entry, and patent under the mining laws, and from disposition under all laws relating to mineral and geothermal leasing.

The establishment of this monument is subject to valid existing rights. Lands and interests in lands within the boundaries of the monument that are not owned or controlled by the United States shall be reserved as part of the monument upon acquisition of ownership or control by the United States.

The Secretary of the Interior (Secretary) shall manage the monument through the National Park Service and the U.S. Fish and Wildlife Service, pursuant to their respective applicable legal authorities, to implement the purposes of this proclamation. The National Park Service shall have the general responsibility for administration of the monument, including the Jacob Jackson Home Site, subject to the responsibility and jurisdiction of the U.S. Fish and Wildlife Service to administer the portions of the national monument that are within the National Wildlife Refuge System. When any additional lands and interests in lands are hereafter acquired by the United States within the monument boundaries, the Secretary shall determine whether such lands will be administered as part of the National Park System or the National Wildlife Refuge System. Hunting and fishing within the National Wildlife Refuge System shall continue to be administered by the U.S. Fish

and Wildlife Service in accordance with the provisions of the National Wildlife Refuge System Administration Act and other applicable laws.

Consistent with applicable laws, the National Park Service and the U.S. Fish and Wildlife Service shall enter into appropriate arrangements to share resources and services necessary to properly manage the monument. Consistent with applicable laws, the National Park Service shall offer to enter into appropriate arrangements with the State of Maryland for the efficient and effective cooperative management of the monument and the Harriet Tubman—Underground Railroad State Park.

The Secretary shall prepare a management plan for the monument, with full public involvement, within 3 years of the date of this proclamation. The management plan shall ensure that the monument fulfills the following purposes for the benefit of present and future generations: (1) to preserve the historic and scientific resources identified above, (2) to commemorate the life and work of Harriet Tubman, and (3) to interpret the story of the Underground Railroad and its significance to the region and the Nation as a whole. The management plan shall set forth, among other provisions, the desired relationship of the monument to other related resources, programs, and organizations in the region and elsewhere.

Nothing in this proclamation shall be deemed to revoke any existing withdrawal, reservation, or appropriation; however, the monument shall be the dominant reservation.

Warning is hereby given to all unauthorized persons not to appropriate, injure, destroy, or remove any feature of the monument and not to locate or settle upon any of the lands thereof.

IN WITNESS WHEREOF, I have hereunto set my hand this twenty-fifth day of March, in the year of our Lord two thousand thirteen, and of the Independence of the United States of America the two hundred and thirty-seventh.

Billing code 3295–F3

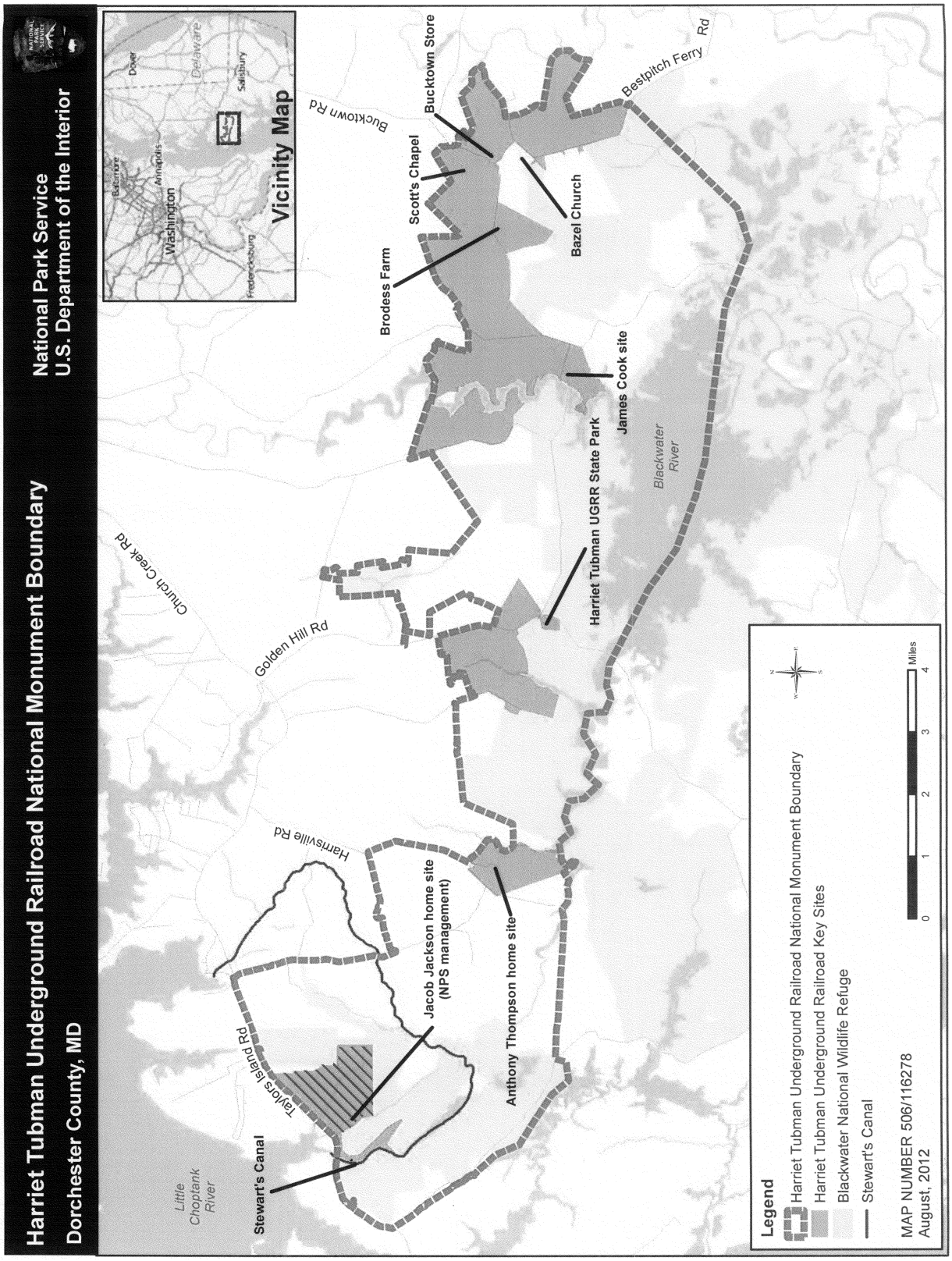

[FR Doc. 2013–07399

Filed 3–27–13; 8:45 am]

Billing code 4310–10–C

Presidential Documents

Proclamation 8944 of March 25, 2013

Establishment of the First State National Monument

By the President of the United States of America

A Proclamation

Sites within the State of Delaware encompass nationally significant objects related to the settlement of the Delaware region by the Swedes, Finns, Dutch, and English, the role that Delaware played in the establishment of the Nation, and the preservation of the cultural landscape of the Brandywine Valley. A national monument that includes certain property in New Castle, Dover, and the Brandywine Valley, Delaware (with contiguous acreage in the Township of Chadd's Ford, Pennsylvania) will allow the National Park Service and its partners to protect and manage these objects of historic interest and interpret for the public the resources and values associated with them.

In 1638, Peter Minuit led Swedish and Finnish colonists to present-day Wilmington, established New Sweden, and built Fort Christina. Holy Trinity (Old Swedes) Church nearby includes a burial ground used since the Swedes landed in this area in 1638. In 1651, Peter Stuyvesant led Dutch settlers from New Amsterdam in present-day New York to a site approximately 7 miles south of Fort Christina. There, in present-day New Castle, the Dutch built Fort Casimir and named the place ''New Amstel.'' The Dutch fort at New Amstel occupied a better position than the Swedish Fort Christina for controlling commerce. Conflicts between the Swedish and Dutch colonists resulted in changing occupations of Fort Casimir, with the Dutch regaining control in 1655.

In 1664, the English arrived in New Amstel, seized the city for the King of England, and renamed it ''New Castle.'' The English also wrested control of all of New Netherland, incorporating it into the colony of New York under the Duke of York, brother of King Charles II.

In 1681, King Charles II deeded Pennsylvania to William Penn. To protect the land around New Castle that he had previously granted to the Duke of York, the King set the boundary 12 miles from New Castle in an arc extending radially from a point subsequently marked by the cupola of the New Castle Court House built in 1732. To gain access to the Atlantic Ocean for his new Quaker Colony, however, William Penn persuaded the Duke of York to give him the three ''Lower Counties of Pennsylvania'' that eventually became Delaware. The ''12-mile arc'' that separated these lower counties from the rest of Pennsylvania, and eventually became the State boundary between Pennsylvania and Delaware, runs through the present-day Woodlawn property in the Brandywine Valley (Woodlawn).

William Penn landed in New Castle in 1682, and took possession of the city. In 1704, Penn allowed the General Assembly of the Three Lower Counties to meet in New Castle separately from the Assembly in Philadelphia, portending the development of the State of Delaware. New Castle remained the colonial capital of Delaware until 1777, and the New Castle Court House served as the meeting place of the Delaware Assembly.

During the 1700s, colonial Delaware actively participated in both the first and second Continental Congresses, and engaged in the debates over British actions and the question of independence. The Delaware Assembly met

on June 15, 1776, in the New Castle Court House, where it voted to separate from England and from Pennsylvania, creating the ''Delaware State.'' The Court House served as the capitol until 1777, when government functions moved to Dover as a precaution against attack from British warships in the Delaware River.

The Court House and the New Castle Historic District, including the Green, the Sheriff's House, and numerous additional resources from the time of earliest settlement through the Federal era, are National Historic Landmarks. The Green has served as a center of activity since the Dutch laid it out as the Public Square. The Sheriff's House, abutting the Court House on the Green, is architecturally significant and is all that remains of the State's first prison system. The New Castle Court House later provided the setting for a dramatic chapter in the history of the Underground Railroad: the criminal trial, presided over by Chief Justice Roger B. Taney, of prominent Quaker abolitionist Thomas Garrett and his colleague John Hunn for assisting runaway slaves escaping from Maryland to Pennsylvania. In the trial Garrett defiantly asserted that he would continue to assist runaway slaves, as he did working with Harriet Tubman and other heroes of the Underground Railroad.

The Constitution of the United States was completed in Philadelphia on September 17, 1787, and then sent to the Congress of the Confederation for transmittal to the State legislatures. At the Golden Fleece Tavern on the Dover Green, a Delaware convention ratified the Constitution on December 7, 1787, earning Delaware the accolade of ''the First State.'' Though the Tavern no longer exists, Dover Green is the central area of the Dover Green Historic District that signifies this event and many others, including the mustering of a Continental Regiment during the American Revolution and the reading of the Declaration of Independence in 1776.

The boundary arc establishing the three ''Lower Counties of Pennsylvania'' that became the State of Delaware runs, in part, through Woodlawn, northwest of Wilmington. Woodlawn is situated on land in the Brandywine Valley acquired by William Penn in 1682. Penn commissioned a survey of this land that marked the 12-mile boundary arc through his property with tree blazes, which were replaced in 1892 with stone markers, two of which still stand. In 1699, Penn sold 2,000 acres of this property to the Pennsylvania Land Company, which in turn sold the land predominantly to Quakers, who had begun settling the area before 1690. In time, the Brandywine and Delaware valleys were more densely settled with Quakers than any other rural area in the United States. At least eight structures from the 18th century are known to be located at Woodlawn. Because Woodlawn has been relatively undisturbed, it still exhibits colonial and Quaker settlement patterns that have vanished elsewhere.

The preservation of Woodlawn is the result of the little-known but historically significant story of Quaker industrialist William Poole Bancroft's prescient planning efforts for the region. Beginning in 1906, Bancroft began to purchase property in the Brandywine Valley, 5 miles outside Wilmington city limits, to hold in reserve for the health and well-being of the public. Heir to the Bancroft textile mills on the Brandywine River, Bancroft eventually amassed over 1,300 acres, of which Woodlawn comprises approximately 1,100 acres that remain essentially the same as when he purchased them: farm fields and forest predominate, dotted with old farmsteads, bridges, and a few roads and trails.

Bancroft provided this rural landscape as part of an altruistic planning effort that also included affordable housing in the City of Wilmington and a system of parks and parkways, on which Frederick Law Olmsted consulted, that linked the neighborhoods to the green spaces. Bancroft established the Woodlawn Trustees to preserve much of the rural landscape as public park land where city residents could enjoy recreation and bucolic surroundings.

WHEREAS section 2 of the Act of June 8, 1906 (34 Stat. 225, 16 U.S.C. 431) (the ''Antiquities Act''), authorizes the President, in his discretion, to declare by public proclamation historic landmarks, historic and prehistoric structures, and other objects of historic interest that are situated upon the lands owned or controlled by the Government of the United States to be national monuments, and to reserve as a part thereof parcels of land, the limits of which in all cases shall be confined to the smallest area compatible with the proper care and management of the objects to be protected;

WHEREAS, for the purpose of establishing a national monument, the State of Delaware has donated to the United States certain lands and interests in lands in New Castle, Delaware (including the Sheriff's House in fee, and an easement for the protection of and access to the New Castle Court House and the Green); the City of Dover has donated to the United States an easement for the protection of and access to the Dover Green; and the Conservation Fund, with the support of the Mt. Cuba Center and the cooperation of the Rockford Woodlawn Fund has donated the Woodlawn property to the United States in fee;

WHEREAS it is in the public interest to preserve and protect the objects of historic interest associated with the early settlement of Delaware, the role of Delaware as the first State to ratify the Constitution, and the establishment and conservation of Woodlawn;

NOW, THEREFORE, I, BARACK OBAMA, President of the United States of America, by the authority vested in me by section 2 of the Antiquities Act, hereby proclaim, set apart, and reserve as the First State National Monument (monument), the objects identified above and all lands and interests in lands owned or controlled by the Government of the United States within the boundaries described on the accompanying maps, which are attached to and form a part of this proclamation, for the purpose of protecting those objects. These reserved Federal lands and interests in lands encompass approximately 1,108 acres, together with appurtenant easements for all necessary purposes, which is the smallest area compatible with the proper care and management of the objects to be protected.

All Federal lands and interests in lands within the boundaries of the monument are hereby appropriated and withdrawn from all forms of entry, location, selection, sale, leasing, or other disposition under the public land laws, including withdrawal from location, entry, and patent under the mining laws, and from disposition under all laws relating to mineral and geothermal leasing.

The establishment of the monument is subject to valid existing rights. Lands and interests in lands within the monument boundaries not owned or controlled by the United States shall be reserved as part of the monument upon acquisition of ownership or control by the United States.

The Secretary of the Interior (Secretary) shall manage the monument through the National Park Service, pursuant to applicable legal authorities, consistent with the purposes and provisions of this proclamation. Further, to the extent authorized by law, the Secretary shall promulgate any additional regulations needed for the proper care and management of the monument.

The Secretary shall prepare a management plan for the monument, with full public involvement, within 3 years of the date of this proclamation. The management plan shall ensure that the monument fulfills the following purposes for the benefit of present and future generations: (1) to preserve and protect the objects of historic interest identified above; (2) to interpret the story of early Swedish, Finnish, Dutch, and English settlement in the region, and Delaware's role in the establishment of the Nation, including as the first State to ratify the Constitution; and (3) to preserve Woodlawn consistent with William Poole Bancroft's vision of a rural landscape accessible to the public for their health and well-being. The management plan shall set forth, among other provisions, the desired relationship of the monument to other related resources, programs, and organizations in the region,

including Old Swedes Church, Fort Christina, Stonum, Lombardy Hall, Brandywine Creek State Park, Hagley Museum and Library, Nemours Mansion and Gardens, Winterthur Museum and Country Estate, Brandywine River Museum, Longwood Gardens, John Dickinson Plantation, and First State Heritage Park.

The National Park Service shall consult with State and local agencies and other appropriate organizations in planning for interpretation and visitor services at the monument. The National Park Service is directed to use applicable authorities to seek to enter into agreements addressing common interests and promoting management efficiencies, including provision of visitor services, interpretation and education, and preservation of resources and values.

Nothing in this proclamation shall be deemed to revoke any existing withdrawal, reservation, or appropriation; however, the monument shall be the dominant reservation.

Warning is hereby given to all unauthorized persons not to appropriate, injure, destroy, or remove any feature of the monument and not to locate or settle upon any of the lands thereof.

IN WITNESS WHEREOF, I have hereunto set my hand this twenty-fifth day of March, in the year of our Lord two thousand thirteen, and of the Independence of the United States of America the two hundred and thirty-seventh.

Billing code 3295–F3

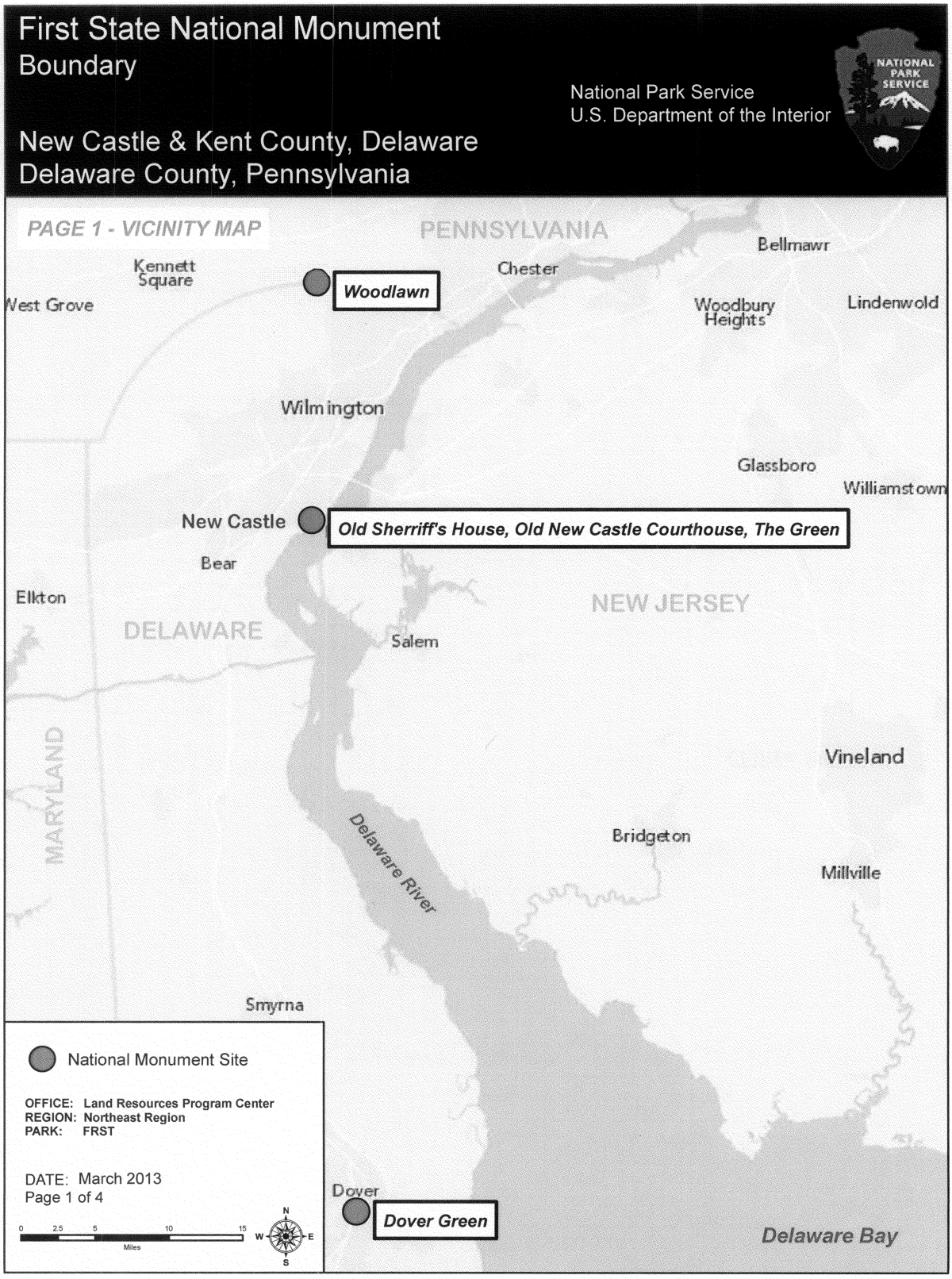
First State National Monument
Boundary
National Park Service
U.S. Department of the Interior
NATIONAL PARK SERVICE
New Castle & Kent County, Delaware
Delaware County, Pennsylvania
PAGE 1 - VICINITY MAP
PENNSYLVANIA
Bellmawr
Kennett Square
Chester
Woodlawn
West Grove
Woodbury Heights
Lindenwold
Wilmington
Glassboro
Williamstown
New Castle
Old Sherriff's House, Old New Castle Courthouse, The Green
Bear
Elkton
NEW JERSEY
DELAWARE
Salem
MARYLAND
Vineland
Delaware River
Bridgeton
Millville
Smyrna
National Monument Site
OFFICE: Land Resources Program Center
REGION: Northeast Region
PARK: FRST
DATE: March 2013
Page 1 of 4
0 2.5 5 10 15
Miles
N
W
E
S
Dover
Dover Green
Delaware Bay

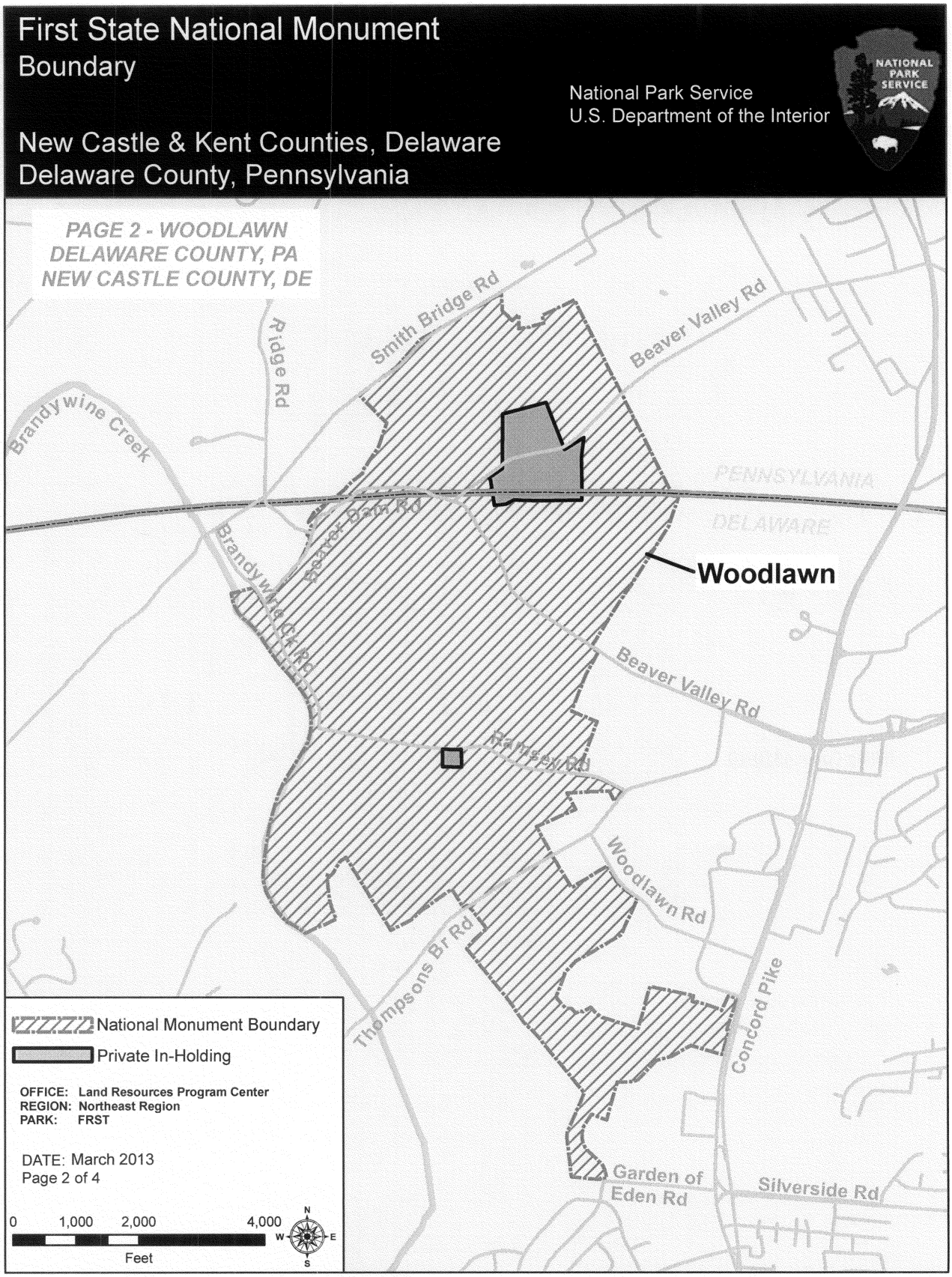
First State National Monument
Boundary
National Park Service
U.S. Department of the Interior
New Castle & Kent Counties, Delaware
Delaware County, Pennsylvania
PAGE 2 - WOODLAWN
DELAWARE COUNTY, PA
NEW CASTLE COUNTY, DE
Smith Bridge Rd
Beaver Valley Rd
Ridge Rd
Brandywine Creek
PENNSYLVANIA
DELAWARE
Beaver Dam Rd
Brandywine Cr Rd
Woodlawn
Beaver Valley Rd
Rayfern Rd
Woodlawn Rd
Thompsons Br Rd
Concord Pike
Garden of Eden Rd
Silverside Rd
National Monument Boundary
Private In-Holding
OFFICE: Land Resources Program Center
REGION: Northeast Region
PARK: FRST
DATE: March 2013
Page 2 of 4
0 1,000 2,000 4,000
Feet
N
W
E
S

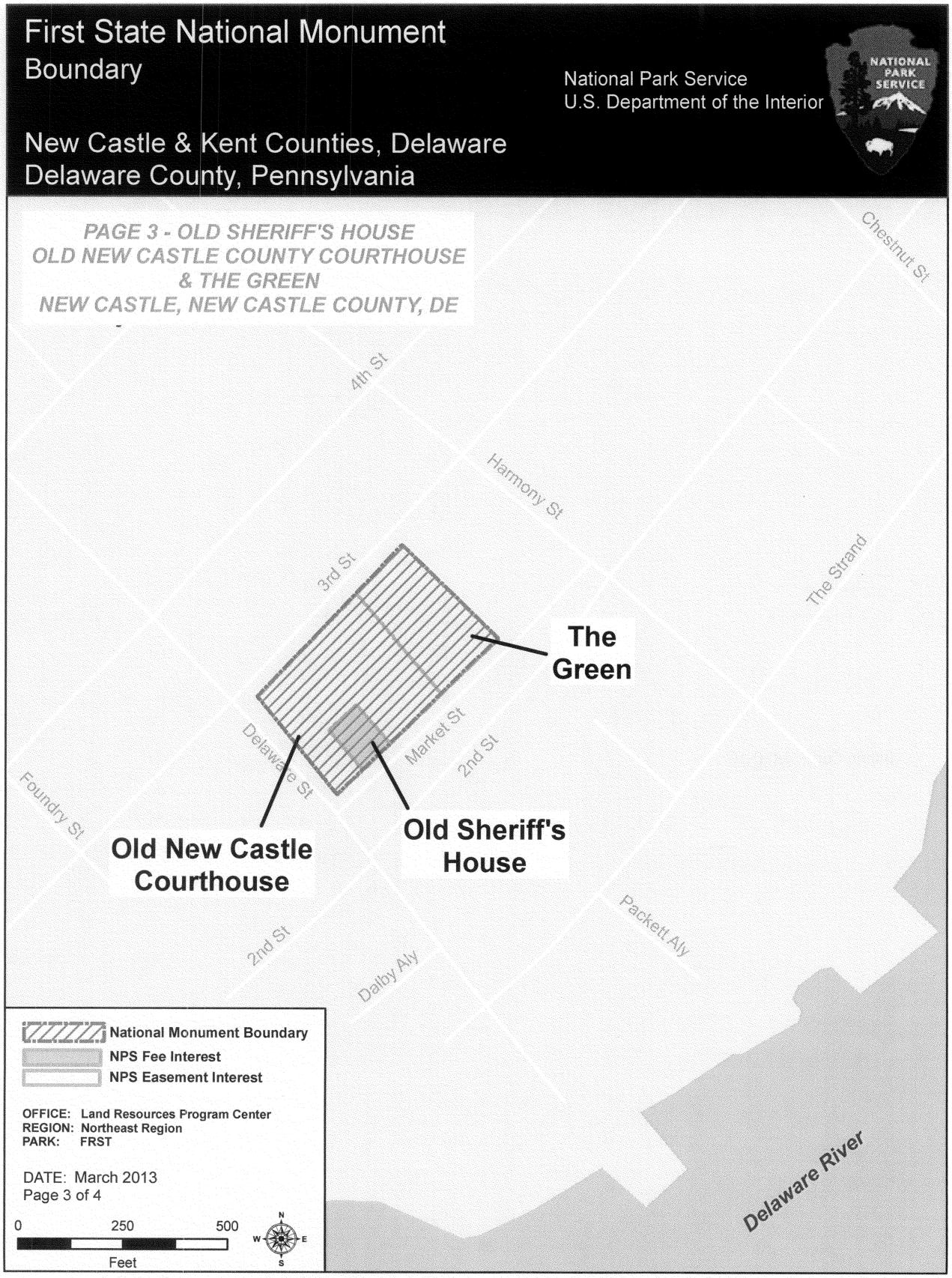
First State National Monument
Boundary
National Park Service
U.S. Department of the Interior
NATIONAL PARK SERVICE
New Castle & Kent Counties, Delaware
Delaware County, Pennsylvania
PAGE 3 - OLD SHERIFF'S HOUSE
OLD NEW CASTLE COUNTY COURTHOUSE
& THE GREEN
NEW CASTLE, NEW CASTLE COUNTY, DE
Chestnut St
4th St
Harmony St
The Strand
3rd St
The Green
Market St
2nd St
Delaware St
Foundry St
Old New Castle Courthouse
Old Sheriff's House
Packett Aly
2nd St
Dalby Aly
Delaware River
National Monument Boundary
NPS Fee Interest
NPS Easement Interest
OFFICE: Land Resources Program Center
REGION: Northeast Region
PARK: FRST
DATE: March 2013
Page 3 of 4
0
250
500
Feet
N
W
E
S

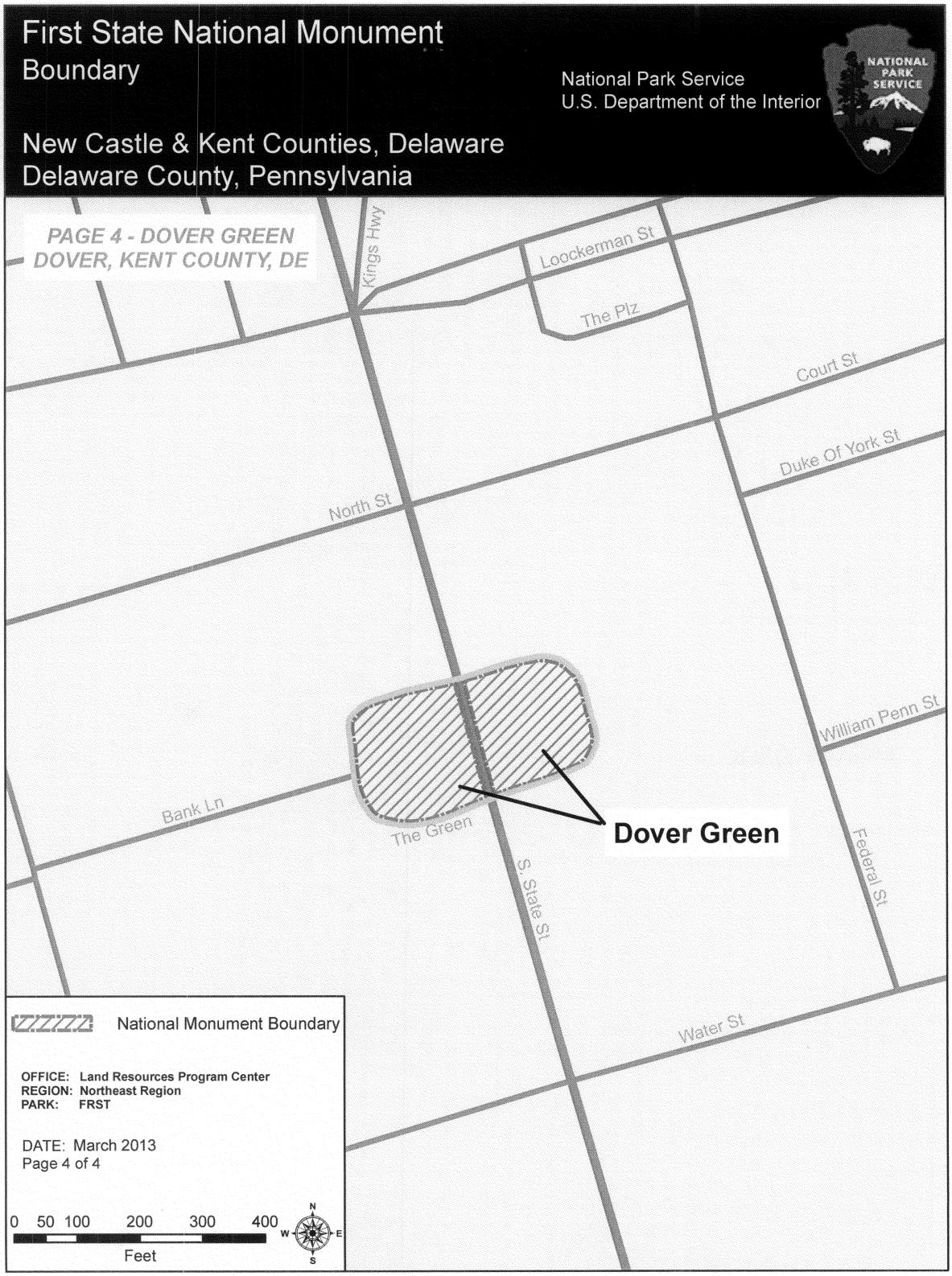

[FR Doc. 2013–07401

Filed 3–27–13; 8:45 am]

Billing code 4310–10–C

Presidential Documents

Proclamation 8945 of March 25, 2013

Establishment of the Charles Young Buffalo Soldiers National Monument

By the President of the United States of America

A Proclamation

Colonel Charles Young was the highest ranking African-American commanding officer in the United States Army from 1894 until his death in 1922. He also served as the first African-American superintendent of a national park, overseeing Sequoia and General Grant (now Kings Canyon) National Parks while commanding a troop of Buffalo Soldiers in the years before the creation of the National Park Service.

Young served nearly his entire military career with the all-black 9th and 10th Calvary regiments, often called ''Buffalo Soldiers.'' Commissioned in 1889 as a second lieutenant, Young attained the rank of colonel in 1917. During his career he served on the western frontier, saw combat in the Philippines, and rode with General John ''Black Jack'' Pershing in Mexico in 1916. He was the first African American to serve as a United States military attaché, first to Hispaniola (Haiti and the Dominican Republic) and later to Liberia. Young's diverse military career included a posting to Wilberforce University to serve as a professor of tactics and military science.

Born to enslaved parents in Kentucky in 1864, Young's parents, Gabriel and Arminta Young, moved to Ripley, Ohio, in 1866 with their two-year-old son Charles to improve their prospects after the Civil War. This Ohio River town was a center of abolitionism renowned as a welcoming place on the Underground Railroad during the antebellum years. Young thrived there and, in 1881 at age 17, he graduated with academic honors as a member of his integrated high school class. His mother encouraged his life-long intellectual and musical pursuits. Young grew up proud of his father's military service as a Union soldier during the Civil War, and he heeded his father's advice by entering the United States Military Academy at West Point. In 1889, Young was the third African American to graduate from West Point and the last African American to complete West Point until 1936.

Young established his career between 1889 and 1907, serving in the 9th Cavalry at western posts as a second lieutenant in Nebraska and Utah before accepting the military posting at Wilberforce University, where he was promoted to the rank of first lieutenant. During the Spanish-American War he was commissioned in the volunteers as a major, and accepted command of the 9th Ohio Volunteer Infantry Battalion. Although the unit did not deploy or see action, it gained a reputation for discipline and efficiency. Following the war, he returned to his regiment, and was promoted to captain in 1901. He saw combat with the regiment in the Philippine Islands and returned with the 9th Cavalry to California, where his troop was selected as honor guard for the visiting President Theodore Roosevelt—the first time African-American soldiers had served in that capacity. While assigned to the Presidio, Young and his regiment of Buffalo Soldiers were dispatched to Sequoia and General Grant National Parks where Young served as the acting superintendent, and earned the respect of not only the African-American troops he commanded, but also of the white construction crews

he directed. His achievements drew the attention of President Theodore Roosevelt. Captain Young was appointed military attaché to Hispaniola in 1904—the first such appointment for an African American—before rejoining the 9th Cavalry in the Philippines, Wyoming, and Texas from 1908 to 1911.

In 1894, when Young accepted a posting at Wilberforce University, he returned to Ohio and with his widowed mother purchased a large house and adjoining farmland, which he named ''Youngsholm.'' While a professor at Wilberforce University, Young established life-long friendships with poet Paul Laurence Dunbar and philosopher W.E.B. Dubois. Youngsholm served as a gathering place for elite African-American thinkers, performers, and leaders. Young opened his doors to aspiring young people, and welcomed a revolving extended family there even during his many military postings. Although Young's career took him to far-flung places, it was Wilberforce, Ohio—where he established his home, raised a family, mentored a successive generation of leaders, and found intellectual refuge—that remained his base of operation.

From 1912 to 1916, Young served as the military attaché to Liberia, helping to train the Liberian Frontier Force, and then served as a squadron commander during the Punitive Expedition in Mexico against Pancho Villa. He distinguished himself at the Battle of Agua Caliente, leading his men to the aid of a cavalry unit that had been ambushed. During the same period, Young won additional promotions, to major in 1912, and lieutenant colonel in 1916. The 1916 examination board for his promotion to lieutenant colonel acknowledged Young's prior illness (malaria contracted while in Liberia), but concluded he was fit for duty.

On the eve of World War I, Young was the highest ranking African-American officer in the U.S. Army. As the United States readied its forces for Europe, Young and his supporters expected that he would continue to rise in rank and contribute to the wartime effort. Subsequent examination boards recommended Young for a promotion, but also noted medical concerns about his fitness to serve. In June 1917, Young was selected for promotion to the rank of colonel; however, his physical exam revealed he suffered from nephritis (a condition first diagnosed in 1901), high blood pressure, and an enlarged heart. Around the same time, several Southern Senators were pressuring President Woodrow Wilson and his Secretary of War to take steps to reassign or otherwise prevent white officers from serving under Young's command. Indeed, as the United States entered World War I, the War Department generally kept African Americans from assuming leadership of African-American regiments being sent to France and largely restricted African-American troops to non-combat roles.

In July 1917, Young was medically retired as a result of his illnesses, and promoted to Colonel in recognition of his distinguished Army service. Young was disappointed, and he and his supporters asked for reconsideration. To demonstrate his fitness to serve, Young—who was then 54—made an historic 500-mile horseback ride from Wilberforce, Ohio, to Washington, DC Afterwards, the Secretary of War gave Young an informal hearing, but did not reverse the decision. The War Department's action in this matter was controversial, especially within the African-American community, during this time of significant racial tension. Young continued to protest his retirement and work for the civil rights of all African-American soldiers.

Yet, Young's career was not over. Though medically retired, he was retained on a list of active duty officers. During World War I, the War Department sent him back to Ohio to help muster and train African-American troops being recruited for the war. Days before the November 1918 armistice, Young was assigned for a few months to Camp Grant in Rockford, Illinois, to train African-American servicemen for non-combat duties. Shortly thereafter, at the request of the State Department, Colonel Young was sent once more to serve again as military attaché to Liberia, arriving in Monrovia in February 1920. While in neighboring Nigeria, he passed away at the British hospital

in Lagos on January 8, 1922. In 1923, Colonel Charles Young became only the fourth soldier to be honored with a funeral service at the Arlington Amphitheatre before burial in Arlington Cemetery.

Colonel Charles Young's story and leadership are also emblematic of the experience of the Buffalo Soldiers during difficult and racially tense times. The story of the Buffalo Soldiers' bravery and service is not fully told at any existing national park sites. In 1866, the Congress established six all-black regiments, later consolidated to four, to help rebuild the country after the Civil War and to patrol the remote western frontier during the ''Indian Wars.'' Although the pay was low for the time—only $13 a month—many African Americans enlisted because they could earn more and be treated with more dignity than they typically could in civilian life. According to legend, American Indians called the black cavalry troops ''buffalo soldiers'' because of their dark, curly hair, which resembled a buffalo's coat. Aware of the buffalo's fierce bravery and fighting spirit, the African-American troops accepted the name with pride and honor.

The Buffalo Soldiers fought alongside white regiments in many conflicts and were instrumental in the exploration and settlement of western lands. They were also an important part of the early history of America's national parks. Before the Congress created the National Park Service in 1916, the U.S. Army played a critical role in administering several parks. The Army sent the Buffalo Soldiers stationed at the Presidio to manage Yosemite, General Grant, and Sequoia National Parks in California. The Buffalo Soldiers blazed early park trails, built roads, produced maps, drove out trespassing livestock, extinguished fires, monitored tourists, and kept poachers and loggers at bay.

WHEREAS section 2 of the Act of June 8, 1906 (34 Stat. 225, 16 U.S.C. 431) (the ''Antiquities Act''), authorizes the President, in his discretion, to declare by public proclamation historic landmarks, historic and prehistoric structures, and other objects of historic or scientific interest that are situated upon the lands owned or controlled by the Government of the United States to be national monuments, and to reserve as a part thereof parcels of land, the limits of which in all cases shall be confined to the smallest area compatible with the proper care and management of the objects to be protected;

WHEREAS the National Park Foundation and the Trust for Public Lands, with the assistance and cooperation of the Friendship Foundation, Omega Psi Phi fraternity, and Central State University, have relinquished the existing remainder of the Youngsholm property, consisting of Colonel Young's home and surrounding farmland, to the United States for the purpose of establishing this monument;

WHEREAS it is in the public interest to preserve and protect the objects of historic and scientific interest associated with Charles Young and the Buffalo Soldiers at Youngsholm in Wilberforce, Ohio;

NOW, THEREFORE, I, BARACK OBAMA, President of the United States of America, by the authority vested in me by section 2 of the Antiquities Act, hereby proclaim, set apart, and reserve as the Charles Young Buffalo Soldiers National Monument (monument) the objects identified above and all lands and interests in lands owned or controlled by the Government of the United States within the boundaries described on the accompanying map, which is attached to and forms a part of this proclamation, for the purpose of protecting those objects. These reserved Federal lands and interests in lands encompass 59.65 acres, which is the smallest area compatible with the proper care and management of the objects to be protected.

All Federal lands and interests in lands within the boundaries of the monument are hereby appropriated and withdrawn from all forms of entry, location, selection, sale, leasing, or other disposition under the public land laws, including withdrawal from location, entry, and patent under the mining

laws, and from disposition under all laws relating to mineral and geothermal leasing.

The establishment of the monument is subject to valid existing rights. Lands and interests in lands within the monument boundaries not owned or controlled by the United States shall be reserved as part of the monument upon acquisition of ownership or control by the United States.

The Secretary of the Interior (Secretary) shall manage the monument through the National Park Service, pursuant to applicable legal authorities, consistent with the purposes of this proclamation.

The Secretary shall prepare a management plan for the monument, with full public involvement, within 3 years of the date of this proclamation. The management plan shall ensure that the monument fulfills the following purposes for the benefit of present and future generations: (1) to preserve and protect the objects of historic and scientific interest identified above, (2) to commemorate the life and accomplishments of Colonel Charles Young, and (3) to interpret the struggles and achievements of the Buffalo Soldiers in their service to the United States. The management plan shall identify steps to be taken to provide interpretive opportunities concerning Colonel Young and the Buffalo Soldiers both at the monument and at other sites where appropriate. The management plan shall also set forth the desired relationship of the monument to other related resources, programs, and organizations associated with the life of Colonel Charles Young, such as the U.S. Army, the Omega Psi Phi fraternity, and Wilberforce University, as well as to other sites significant to the Buffalo Soldiers.

The National Park Service shall use existing authorities as appropriate to enter into agreements with Central State University, Wilberforce University, Omega Psi Phi, the Ohio Historical Society, and other organizations and individuals to provide further opportunities for interpretation and education consistent with monument purposes. The National Park Service shall coordinate with the Golden Gate National Recreation Area, which manages the Presidio in San Francisco, and Sequoia, Kings Canyon, and Yosemite National Parks to commemorate the historical ties between Colonel Charles Young and his military assignments at those sites, and the role of the Buffalo Soldiers as pioneering stewards of our national parks. The National Park Service shall use available authorities, as appropriate, to enter into agreements with other organizations to provide for interpretation and education at additional sites with an historic association or affiliation with the Buffalo Soldiers.

Nothing in this proclamation shall be deemed to revoke any existing withdrawal, reservation, or appropriation; however, the monument shall be the dominant reservation.

Warning is hereby given to all unauthorized persons not to appropriate, injure, destroy, or remove any feature of the monument and not to locate or settle upon any of the lands thereof.

IN WITNESS WHEREOF, I have hereunto set my hand this twenty-fifth day of March, in the year of our Lord two thousand thirteen, and of the Independence of the United States of America the two hundred and thirty-seventh.

Billing code 3295–F3

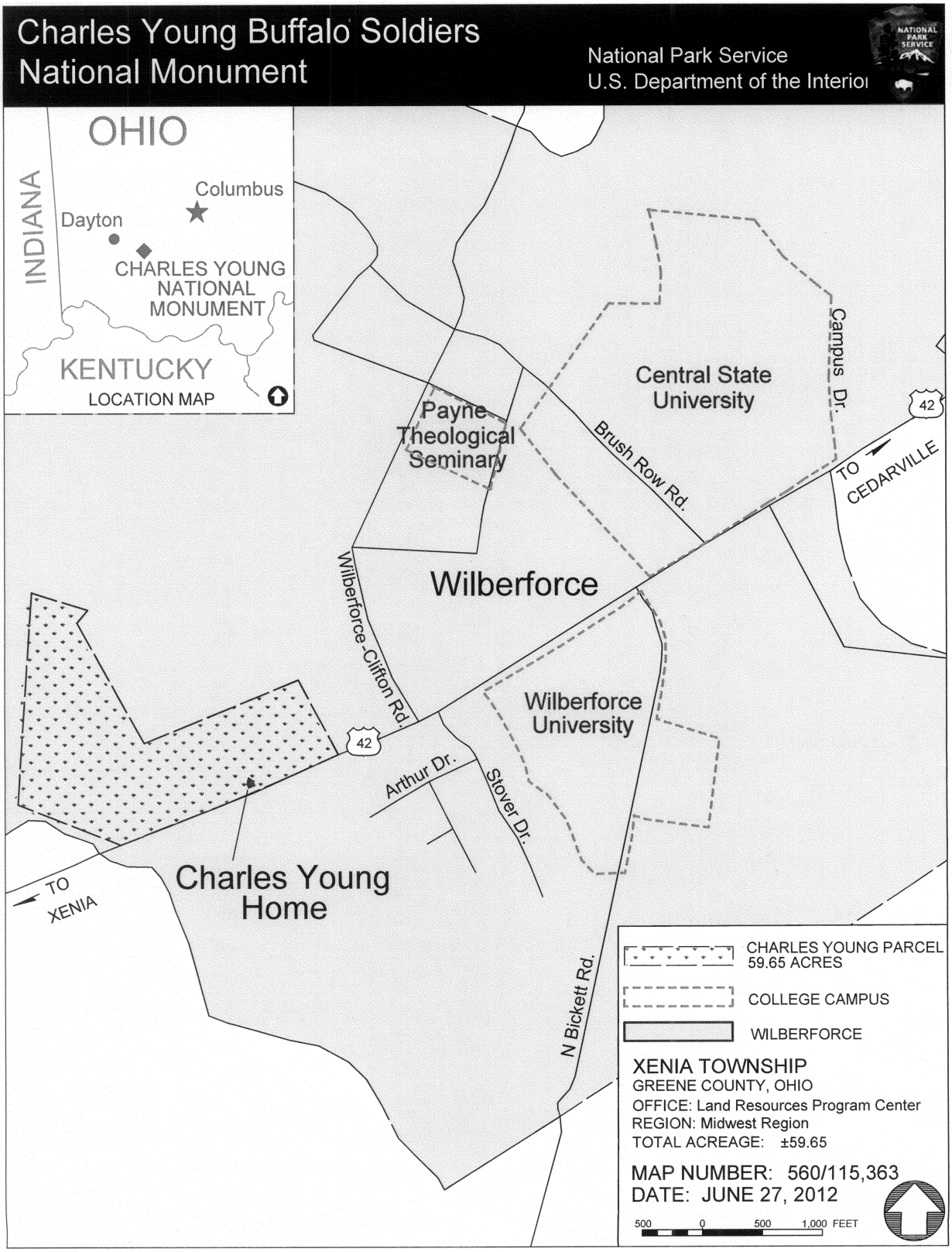

[FR Doc. 2013–07404

Filed 3–27–13; 8:45 am]

Billing code 4310–10–C

Presidential Documents

Proclamation 8946 of March 25, 2013

Establishment of the Río Grande del Norte National Monument

By the President of the United States of America

A Proclamation

In far northern New Mexico, the Río Grande Wild and Scenic River flows through a deep gorge at the edge of the stark and sweeping expanse of the Taos Plateau. Volcanic cones, including the Cerro de la Olla, Cerro San Antonio, and Cerro del Yuta, jut up from this surrounding plateau. Canyons, volcanic cones, wild rivers, and native grasslands harbor vital wildlife habitat, unique geologic resources, and imprints of human passage through the landscape over the past 10,000 years. This extraordinary landscape of extreme beauty and daunting harshness is known as the Río Grande del Norte, and its extraordinary array of scientific and historic resources offer opportunities to develop our understanding of the forces that shaped northern New Mexico, including the diverse ecological systems and human cultures that remain present today.

For millennia, humans have seasonally passed through the Río Grande del Norte, gathering resources and finding spiritual meaning in its dramatic geologic features. Although few have attempted to live year-round in this harsh landscape, the images carved into the gorge's dark basalt cliffs and the artifacts scattered across the forested slopes of the volcanic cones bear ample testimony to the human use of the area.

The Río Grande gorge lies within the traditional area of the nearby Taos and Picuris Pueblos, as well as the Jicarilla Apache and Ute Tribes, and hosts a dazzling array of rock art. Carved into the boulders and cliffs are hundreds of images ranging from seemingly abstract swirls and dots to clear depictions of human and animal figures. Dense collections of petroglyphs are found near the hot springs that bubble up in the deep heart of the gorge, with some dating back to the Archaic Period (ca. 7,500 B.C.–500 A.D.). In addition to petroglyphs, these lands harbor small hunting blinds, pit houses, chipping stations, potsherds, tools and projectile points, as well as large ceramic vessels. The area is home to a rich array of archaeological resources that represent diverse cultural traditions. Archeological resources are found throughout the proposed monument, with its rugged terrain serving as the focal point for ongoing archaeological research. More recent artifacts and images mark the passage of settlers and Hispanic explorers dating back to the early 18th century. Ongoing explorations and inquiries of this unique cultural landscape have resulted in continuous discoveries that further illuminate northern New Mexico's human history.

Separated from the Río Grande Wild and Scenic River by a broad swath of sagebrush and grassland, the Río San Antonio gorge is another area of concentrated artifact and petroglyph sites. People were drawn to this area by the flowing water, hunting opportunities, and nearby San Antonio Mountain, which is thought to have been a major regional source for the dacite used by nomadic peoples to create stone tools thousands of years ago. This corner of the Río Grande del Norte landscape was traversed by traders and other travelers during the 18th and 19th centuries, who traded furs and other goods and later brought woolen articles from New Mexico's sheep grazing communities to markets throughout the Southwest.

Between the Río Grande gorge and the Río San Antonio gorge stretches a sweeping and austere expanse of the Taos Plateau. The Río Grande del Norte landscape is a testament to the geologic past of New Mexico and the 70 million year tectonic history of the Río Grande Rift, one of the world's major rift systems. Composed of Servilleta lava basalts and rhyolites, the Taos Plateau has long been a center of research in geology and volcanology. Rising in stark contrast from the plateau's broad expanse, Cerro de la Olla, Cerro San Antonio, and other volcanic cones provide visible reminders of the area's volatile past. Cerro del Yuta, or Ute Mountain, the tallest of these extinct volcanoes, rises above the plateau to an elevation topping 10,000 feet. Springs within the Río Grande gorge have been measured emitting 6,000 gallons of water per minute into the river bed and are thought to be part of a flooded lava tube system.

This northern New Mexico landscape also exhibits significant ecological diversity in these different geologic areas. From the cottonwood and willows along the Río Grande corridor, to the expansive sagebrush plains above the gorge on the Taos Plateau, the piñons at the base of Ute Mountain, and the spruce, aspen, and Douglas fir covering the mountain's northern slopes, the diversity of both ecosystems and species allows for, and has been the subject of, substantial scientific research.

The Río Grande gorge connects the northern reaches of the river's watershed with its middle and lower stretches. Deep within the gorge, beneath soaring cliffs that rise hundreds of feet above the river, stands of willow and cottonwood thrive in riparian and canyon ecosystems that have been present since the river first appeared in the Río Grande Rift Valley. The river provides habitat for fish such as the Río Grande cutthroat trout as well as the recently reintroduced North American river otter. The Río Grande del Norte is part of the Central Migratory Flyway, a vital migration corridor for birds such as Canada geese, herons, sandhill cranes, hummingbirds, and American avocets. Several species of bats make their home in the gorge, which also provides important nesting habitat for golden eagles and numerous other raptor species, as well as habitat for the endangered southwestern willow flycatcher.

Bald eagles roost above the river in winter and fly out over the Taos Plateau's sagebrush shrub habitat and native grasslands, which stretch for thousands of acres to the west. The vast plateau harbors a significant diversity of mammals and birds, from the eagles, hawks, falcons, and owls soaring above the plateau to the small mammals on which they prey. Many other bird species, including Merriam's turkey, scaled quail, mourning dove, mountain plover, and loggerhead shrike, can be seen or heard on the plateau. Large mammals, including the Rocky Mountain elk, mule deer, pronghorn, and Rocky Mountain bighorn sheep, find their winter homes on the plateau alongside a population of rare Gunnison's prairie dogs. The Río Grande del Norte also provides habitat for many species of predators, including the ringtail, black bear, coyote, red fox, cougar, and bobcat.

While diverse peoples have used this area intermittently for thousands of years, its challenging conditions make it inhospitable for permanent settlement. In an area near the forested slopes of Cerro Montoso, however, a group of eastern homesteaders attempted to make a living in the years immediately following World War I. The nearly forgotten story of this fleeting community, recently revealed through detailed historical research, is written on the landscape by the remnants of homes, root cellars, cistern-style water catchments, and cast metal toys. At one site, researchers have found several World War I brass uniform buttons, evidence of the veterans who once made their homes on this rugged land.

The protection of the Río Grande del Norte will preserve its cultural, prehistoric, and historic legacy and maintain its diverse array of natural and scientific resources, ensuring that the historic and scientific values of this area remain for the benefit of all Americans.

WHEREAS section 2 of the Act of June 8, 1906 (34 Stat. 225, 16 U.S.C. 431) (the ''Antiquities Act''), authorizes the President, in his discretion, to declare by public proclamation historic landmarks, historic and prehistoric structures, and other objects of historic or scientific interest that are situated upon the lands owned or controlled by the Government of the United States to be national monuments, and to reserve as a part thereof parcels of land, the limits of which in all cases shall be confined to the smallest area compatible with the proper care and management of the objects to be protected;

WHEREAS it is in the public interest to preserve the objects of scientific and historic interest on the Río Grande del Norte lands;

NOW, THEREFORE, I, BARACK OBAMA, President of the United States of America, by the authority vested in me by section 2 of the Antiquities Act, hereby proclaim, set apart, and reserve as the Río Grande del Norte National Monument (monument), the objects identified above and all lands and interest in lands owned or controlled by the Government of the United States within the boundaries described on the accompanying map, which is attached to and forms a part of this proclamation. These reserved Federal lands and interests in lands encompass approximately 242,555 acres, which is the smallest area compatible with the proper care and management of the objects to be protected.

All Federal lands and interests in lands within the boundaries of this monument are hereby appropriated and withdrawn from all forms of entry, location, selection, sale, leasing, or other disposition under the public land laws, including withdrawal from location, entry, and patent under the mining laws, and from disposition under all laws relating to mineral and geothermal leasing, other than by exchange that furthers the protective purposes of this proclamation.

The establishment of this monument is subject to valid existing rights. Lands and interests in lands within the monument's boundaries not owned or controlled by the United States shall be reserved as part of the monument upon acquisition of ownership or control by the United States.

The Secretary of the Interior (Secretary) shall manage the monument through the Bureau of Land Management (BLM) as a unit of the National Landscape Conservation System, pursuant to applicable legal authorities, including the Wild and Scenic Rivers Act (82 Stat. 906, 16 U.S.C. 1271 et seq.), to implement the purposes of this proclamation.

For purposes of protecting and restoring the objects identified above, the Secretary, through the BLM, shall prepare and maintain a management plan for the monument and shall provide for maximum public involvement in the development of that plan including, but not limited to, consultation with tribal, State, and local governments as well as community land grant and acequia associations.

Except for emergency or authorized administrative purposes, motorized vehicle use in the monument shall be permitted only on designated roads and non-motorized mechanized vehicle use shall be permitted only on designated roads and trails.

Nothing in this proclamation shall be construed to preclude the Secretary from renewing or authorizing the upgrading of existing utility line rights-of-way within the physical scope of each such right-of-way that exists on the date of this proclamation. Additional utility line rights-of-way or upgrades outside the existing utility line rights-of-way may only be authorized if consistent with the care and management of the objects identified above.

Nothing in this proclamation shall be deemed to enlarge or diminish the rights of any Indian tribe or pueblo. The Secretary shall, in consultation with Indian tribes, ensure the protection of religious and cultural sites in the monument and provide access to the sites by members of Indian

tribes for traditional cultural and customary uses, consistent with the American Indian Religious Freedom Act (92 Stat. 469, 42 U.S.C. 1996) and Executive Order 13007 of May 24, 1996 (Indian Sacred Sites).

Laws, regulations, and policies followed by the BLM in issuing and administering grazing permits or leases on lands under its jurisdiction shall continue to apply with regard to the lands in the monument, consistent with the purposes of this proclamation.

Nothing in this proclamation shall be construed to alter or affect the Río Grande Compact between the States of Colorado, New Mexico, and Texas, or to create any reservation of water in the monument.

Nothing in this proclamation shall be deemed to enlarge or diminish the jurisdiction of the State of New Mexico with respect to fish and wildlife management.

Nothing in this proclamation shall be construed to preclude the traditional collection of firewood and piñon nuts in the monument for personal noncommercial use consistent with the purposes of this proclamation.

Nothing in this proclamation shall be deemed to revoke any existing withdrawal, reservation, or appropriation; however, the monument shall be the dominant reservation.

Warning is hereby given to all unauthorized persons not to appropriate, injure, destroy, or remove any feature of the monument and not to locate or settle upon any of the lands thereof.

IN WITNESS WHEREOF, I have hereunto set my hand this twenty-fifth day of March, in the year of our Lord two thousand thirteen, and of the Independence of the United States of America the two hundred and thirty-seventh.

Billing code 3295–F3

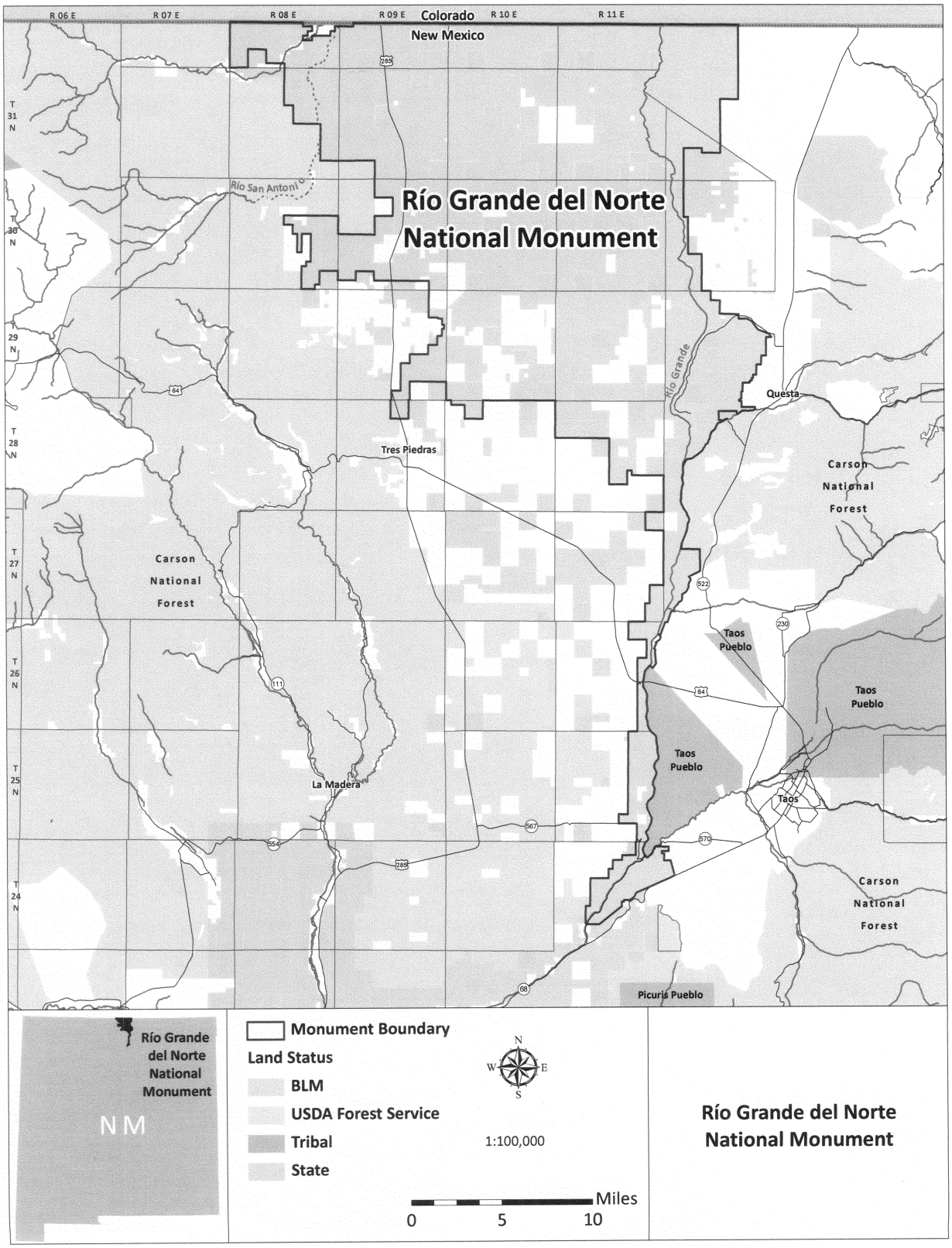

[FR Doc. 2013–07406

Filed 3–27–13; 8:45 am]

Billing code 4310–10–C

Federal Register
Vol. 78, No. 60
Thursday, March 28, 2013

Presidential Documents

Proclamation 8947 of March 25, 2013

Establishment of the San Juan Islands National Monument

By the President of the United States of America

A Proclamation

Within Washington State's Puget Sound lies an archipelago of over 450 islands, rocks, and pinnacles known as the San Juan Islands. These islands form an unmatched landscape of contrasts, where forests seem to spring from gray rock and distant, snow-capped peaks provide the backdrop for sandy beaches. Numerous wildlife species can be found here, thriving in the diverse habitats supported by the islands. The presence of archeological sites, historic lighthouses, and a few tight-knit communities testifies that humans have navigated this rugged landscape for thousands of years. These lands are a refuge of scientific and historic treasures and a classroom for generations of Americans.

The islands are part of the traditional territories of the Coast Salish people. Native people first used the area near the end of the last glacial period, about 12,000 years ago. However, permanent settlements were relatively uncommon until the last several hundred years. The Coast Salish people often lived in villages of wooden-plank houses and used numerous smaller sites for fishing and harvesting shellfish. In addition to collecting edible plants, and hunting various birds and mammals, native people used fire to maintain meadows of the nutritionally rich great camas. Archaeological remains of the villages, camps, and processing sites are located throughout these lands, including shell middens, reef net locations, and burial sites. Wood-working tools, such as antler wedges, along with bone barbs used for fishing hooks and projectile points, are also found on the islands. Scientists working in the San Juan Islands have uncovered a unique array of fossils and other evidence of long-vanished species. Ancient bison skeletons (10,000–12,000 years old) have been found in several areas, indicating that these islands were an historic mammal dispersal corridor. Butcher marks on some of these bones suggest that the earliest human inhabitants hunted these large animals.

The first Europeans explored the narrows of the San Juan Islands in the late 18th century, and many of their names for the islands are still in use. These early explorers led the way for 19th century European and American traders and trappers. By 1852, American settlers had established homesteads on the San Juan Islands, some of which remain today. In the late 19th century, the Federal Government built several structures to aid in maritime navigation. Two light stations and their associated buildings are located on lands administered by the Bureau of Land Management (BLM): Patos Island Light Station (National Register of Historic Places, 1977) and Turn Point Light Station (Washington State Register of Historic Places, 1978).

The lands on Patos Island, Stuart Island, Lopez Island, and neighboring islands constitute some of the most scientifically interesting lands in the San Juan Islands. These lands contain a dramatic and unusual diversity of habitats, with forests, woodlands, grasslands, and wetlands intermixed with rocky balds, bluffs, inter-tidal areas, and sandy beaches. The stands of forests and open woodlands, some of which are several hundred years old, include a majestic assemblage of trees, such as Douglas fir, red cedar, western hemlock, Oregon maple, Garry oak, and Pacific madrone. The fire-

dependent grasslands, which are also susceptible to invasive species, are home to chick lupine, historically significant great camas, brittle cactus, and the threatened golden paintbrush. Rocky balds and bluffs are home to over 200 species of moss that are extremely sensitive to disturbance and trampling. In an area with limited fresh water, two wetlands on Lopez Island and one on Patos Island are the most significant freshwater habitats in the San Juan Islands.

The diversity of habitats in the San Juan Islands is critical to supporting an equally varied collection of wildlife. Marine mammals, including orcas, seals, and porpoises, attract a regular stream of wildlife watchers. Native, terrestrial mammals include black-tail deer, river otter, mink, several bats, and the Shaw Island vole. Raptors, such as bald eagles and peregrine falcons, are commonly observed soaring above the islands. Varied seabirds and terrestrial birds can also be found here, including the threatened marbled murrelet and the recently reintroduced western bluebird. The island marble butterfly, once thought to be extinct, is currently limited to a small population in the San Juan Islands.

The protection of these lands in the San Juan Islands will maintain their historical and cultural significance and enhance their unique and varied natural and scientific resources, for the benefit of all Americans.

WHEREAS section 2 of the Act of June 8, 1906 (34 Stat. 225, 16 U.S.C. 431) (the ''Antiquities Act''), authorizes the President, in his discretion, to declare by public proclamation historic landmarks, historic and prehistoric structures, and other objects of historic or scientific interest that are situated upon the lands owned or controlled by the Government of the United States to be national monuments, and to reserve as a part thereof parcels of land, the limits of which in all cases shall be confined to the smallest area compatible with the proper care and management of the objects to be protected;

WHEREAS it is in the public interest to preserve the objects of scientific and historic interest on the lands of the San Juan Islands;

NOW, THEREFORE, I, BARACK OBAMA, President of the United States of America, by the authority vested in me by section 2 of the Antiquities Act, hereby proclaim the objects identified above that are situated upon lands and interests in lands owned or controlled by the Government of the United States to be the San Juan Islands National Monument (monument), and, for the purpose of protecting those objects, reserve as a part thereof all lands and interests in lands owned or controlled by the Government of the United States and administered by the Department of the Interior through the BLM, including all unappropriated or unreserved islands, rocks, exposed reefs, and pinnacles above mean high tide, within the boundaries described on the accompanying map, which is attached to and forms a part of this proclamation. These reserved Federal lands and interests in lands encompass approximately 970 acres, which is the smallest area compatible with the proper care and management of the objects to be protected.

All Federal lands and interests in lands within the boundaries of the monument administered by the Department of the Interior through the BLM are hereby appropriated and withdrawn from all forms of entry, location, selection, sale, leasing, or other disposition under the public land laws, including withdrawal from location, entry, and patent under the mining laws, and from disposition under all laws relating to mineral and geothermal leasing, other than by exchange that furthers the protective purposes of this proclamation.

The establishment of the monument is subject to valid existing rights. Lands and interests in lands within the monument boundaries not owned or controlled by the Government of the United States shall be reserved as a part of the monument upon acquisition of ownership or control by the Secretary of the Interior (Secretary) on behalf of the United States.

The Secretary shall manage the monument through the BLM as a unit of the National Landscape Conservation System, pursuant to applicable legal authorities, to implement the purposes of this proclamation, except that if the Secretary hereafter acquires on behalf of the United States ownership or control of any lands or interests in lands within the monument boundaries not owned or controlled by the United States, the Secretary shall determine whether such lands and interests in lands will be administered by the BLM as a unit of the National Landscape Conservation System or by another component of the Department of the Interior, consistent with applicable legal authorities.

For purposes of protecting and restoring the objects identified above, the Secretary, through the BLM, shall prepare and maintain a management plan for the monument and shall establish an advisory committee under the Federal Advisory Committee Act (5 U.S.C. App.) to provide information and advice regarding the development of such plan.

Except for emergency, Federal law enforcement, or authorized administrative purposes, motorized vehicle use in the monument shall be permitted only on designated roads, and non-motorized mechanized vehicle use in the monument shall be permitted only on designated roads and trails.

Nothing in this proclamation shall be deemed to enlarge or diminish the rights of any Indian tribe. The Secretary shall, in consultation with Indian tribes, ensure the protection of religious and cultural sites in the monument and provide access to the sites by members of Indian tribes for traditional cultural and customary uses, consistent with the American Indian Religious Freedom Act (42 U.S.C. 1996) and Executive Order 13007 of May 24, 1996 (Indian Sacred Sites).

Nothing in this proclamation shall be deemed to enlarge or diminish the jurisdiction or authority of the State of Washington or the United States over submerged or other lands within the territorial waters off the coast of Washington.

Nothing in this proclamation shall be deemed to enlarge or diminish the jurisdiction of the State of Washington with respect to fish and wildlife management.

Nothing in this proclamation shall be deemed to limit the authority of the Secretary of Homeland Security to engage in search and rescue operations, or to use Patos Island Light Station, Turn Point Light Station, or other aids to navigation for navigational or national security purposes.

Nothing in this proclamation shall be deemed to revoke any existing withdrawal, reservation, or appropriation; however, the monument shall be the dominant reservation.

Nothing in this proclamation shall be deemed to restrict safe and efficient aircraft operations, including activities and exercises of the Armed Forces and the United States Coast Guard, in the vicinity of the monument.

Warning is hereby given to all unauthorized persons not to appropriate, injure, destroy, or remove any feature of the monument and not to locate or settle upon any of the lands thereof.

IN WITNESS WHEREOF, I have hereunto set my hand this twenty-fifth day of March, in the year of our Lord two thousand thirteen, and of the Independence of the United States of America the two hundred and thirty-seventh.

Billing code 3295–F3

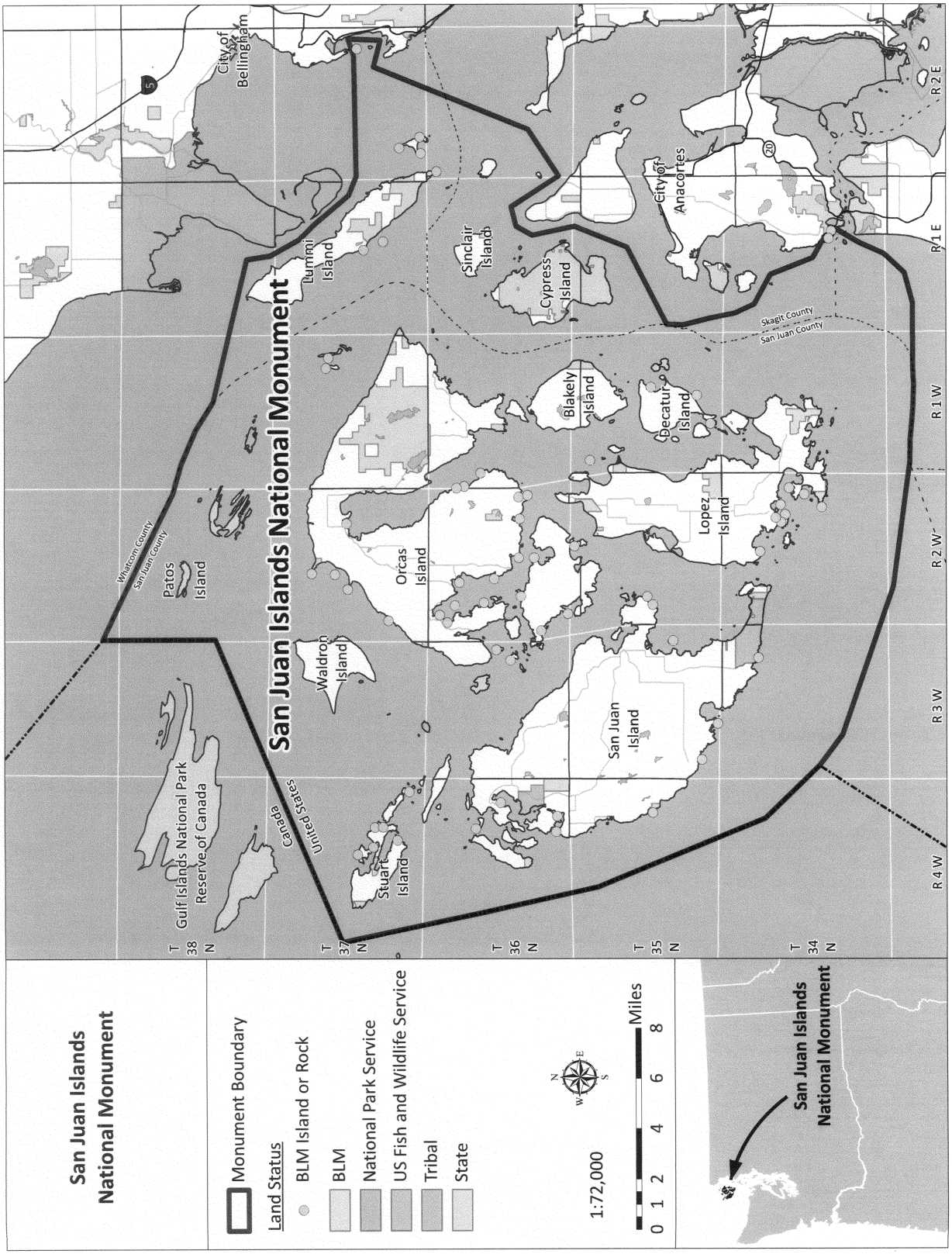

[FR Doc. 2013–07408

Filed 3–27–13; 8:45 am]

Billing code 4310–10–C

Rules and Regulations

Federal Register

Vol. 78, No. 60

Thursday, March 28, 2013

This section of the FEDERAL REGISTER contains regulatory documents having general applicability and legal effect, most of which are keyed to and codified in the Code of Federal Regulations, which is published under 50 titles pursuant to 44 U.S.C. 1510.

The Code of Federal Regulations is sold by the Superintendent of Documents. Prices of new books are listed in the first FEDERAL REGISTER issue of each week.

BUREAU OF CONSUMER FINANCIAL PROTECTION

12 CFR Part 1026

[Docket No. CFPB–2012–0015]

RIN 3170–AA21

Truth in Lending (Regulation Z)

AGENCY: Bureau of Consumer Financial Protection.

ACTION: Final rule; Official Interpretations.

SUMMARY: The Bureau of Consumer Financial Protection (Bureau) is amending Regulation Z, which implements the Truth in Lending Act, and the Official Interpretations of the regulation, which interpret the requirements of Regulation Z. Regulation Z generally limits the total amount of fees that a credit card issuer may require a consumer to pay with respect to an account to 25 percent of the credit limit in effect when the account is opened. Regulation Z previously stated that this limitation applies prior to account opening and during the first year after account opening. This final rule amends Regulation Z to apply the limitation only during the first year after account opening.

DATES: This rule is effective March 28, 2013.

FOR FURTHER INFORMATION CONTACT: Gregory Evans, Counsel, Office of Regulations, Bureau of Consumer Financial Protection, 1700 G Street NW., Washington, DC 20552, at (202) 435–7700.

SUPPLEMENTARY INFORMATION:

I. Background

The Credit Card Accountability Responsibility and Disclosure Act of 2009 (Credit Card Act) was signed into law on May 22, 2009. Public Law 111–24, 123 Stat. 1734 (2009). The Credit Card Act primarily amended the Truth in Lending Act (TILA) and instituted new substantive and disclosure requirements to establish fair and transparent practices for open-end consumer credit plans.

The Credit Card Act added TILA section 127(n)(1), which states that ''[i]f the terms of a credit card account under an open end consumer credit plan require the payment of any fees (other than any late fee, over-the-limit fee, or fee for a payment returned for insufficient funds) by the consumer in the first year during which the account is opened in an aggregate amount in excess of 25 percent of the total amount of credit authorized under the account when the account is opened,'' then ''no payment of any fees (other than any late fee, over-the-limit fee, or fee for a payment returned for insufficient funds) may be made from the credit made available under the terms of the account.'' 15 U.S.C. 1637(n)(1).

On January 12, 2010, the Board of Governors of the Federal Reserve System (Board) issued a final rule implementing new TILA section 127(n) in 12 CFR 226.52(a). *See* 75 FR 7658, 7819 (Feb. 22, 2010) (January 2010 Final Rule). Section 226.52(a) limits the total amount of fees that a credit card issuer may require a consumer to pay with respect to an account to ''25 percent of the credit limit in effect when the account is opened.'' *Id.* Under the Board's January 2010 Final Rule, this limitation applied only during the first year after account opening. *Id.* This rule became effective on February 22, 2010. On April 8, 2011, the Board issued a final rule expanding § 226.52(a) to apply to fees the consumer is required to pay with respect to an account prior to account opening.[1] The change was based on the Board's understanding that certain credit card issuers were ''requiring consumers to pay application or processing fees prior to account opening that, when combined with other fees charged to the account after account opening, exceed 25 percent of the account's initial credit limit.'' 76 FR at 22977. The Board viewed this practice as ''inconsistent with the intent of [TILA] [s]ection 127(n)(1) insofar as it alters the statutory relationship between the costs and benefits of opening a credit card account.'' *Id.* The Board's change to § 226.52(a) was scheduled to become effective on October 1, 2011. *Id.* at 22948.

On July 20, 2011, a credit card issuer filed a lawsuit in the United States District Court for the District of South Dakota, alleging that the Board exceeded its authority by expanding § 226.52(a) to apply to fees the consumer is required to pay prior to account opening. *See First Premier Bank* v. *U.S. Consumer Fin. Prot. Bureau,* 819 F. Supp. 2d. 906 (D.S.D. Sept. 23, 2011). On July 21, 2011, the Board's rulemaking authority to implement the provisions of TILA transferred to the Bureau pursuant to sections 1061 and 1100A of the Dodd-Frank Wall Street Reform and Consumer Protection Act (Dodd-Frank Act). Public Law 111–203 (2010).[2] On August 5, 2011, the card issuer filed a motion for a preliminary injunction, asking the court to postpone the October 1, 2011 effective date with respect to the application of § 226.52 to fees paid prior to account opening. The district court granted the motion for a preliminary injunction on September 23, 2011. *First Premier Bank,* 819 F. Supp. 2d. at 923 (South Dakota litigation). As a result of the court's order, the portion of the Board's 2011 final rule applying § 226.52(a) to pre-account opening fees has not become effective.

On December 22, 2011, the Bureau published in the **Federal Register** an interim final rule to reflect its assumption of rulemaking authority over Regulation Z. 76 FR 79768 (Dec. 22, 2011). The interim final rule made only technical changes to Regulation Z, such as noting the Bureau's authority and renumbering Regulation Z as 12 CFR Part 1026. Accordingly, the provision addressed in this rulemaking and in the litigation discussed above is properly cited as 12 CFR 1026.52(a).

II. Summary of the Bureau's Rulemaking Process

A. The Bureau's Proposal

On April 12, 2012, the Bureau issued a proposal to amend 12 CFR 1026.52(a), and associated Official Interpretations, to provide that the fee limit of 25 percent of the credit limit in effect when

[1] 76 FR 22948, 23002 (Apr. 25, 2011) (April 2011 Final Rule). The Board proposed this provision for comment in November 2010. 75 FR 67458, 67475 (Nov. 2, 2010).

[2] *See* 12 U.S.C. 5581; 15 U.S.C. 1604(a); Designated Transfer Date, 75 FR 57252 (Sept. 20, 2010).

the account is opened applies only during the first year after account opening. 77 FR 21875 (Apr. 12, 2012) (April 2012 Proposed Rule). The Bureau issued the April 2012 Proposed Rule to resolve the uncertainty created by the South Dakota litigation discussed above. The comment period closed on June 11, 2012.

B. Summary of Public Comments

In response to the April 2012 Proposed Rule, the Bureau received over 50 electronically submitted comments, as well as approximately 1,000 mailed form letters, prior to the comment closing date. The majority of the comment letters were submitted by members of the public, although the Bureau also received comments from industry, consumer advocacy groups, and the New York State Office of the Attorney General.

Many members of the public opposed the April 2012 Proposed Rule, arguing that amending 12 CFR 1026.52(a) would reduce protections for vulnerable consumers. Consumer advocates and the New York State Office of the Attorney General expressed similar views. Some of these commenters suggested that the Bureau pursue other means of limiting pre-account opening fees, such as writing additional rules, coordinating examination activities, or bringing enforcement actions. Industry representatives, however, supported the proposed rule as a more accurate implementation of the Credit Card Act and an effective way to resolve the current litigation.

III. Legal Authority

The Bureau is issuing this final rule pursuant to its authority under TILA and the Dodd-Frank Act. Effective July 21, 2011, section 1061 of the Dodd-Frank Act transferred to the Bureau the ''consumer financial protection functions'' previously vested in certain other Federal agencies. The term ''consumer financial protection functions'' is defined to include ''all authority to prescribe rules or issue orders or guidelines pursuant to any Federal consumer financial law, including performing appropriate functions to promulgate and review such rules, orders, and guidelines.'' [3] TILA is a Federal consumer financial law.[4] Accordingly, effective July 21, 2011, except with respect to persons excluded from the Bureau's rulemaking authority by section 1029 of the Dodd-Frank Act, the authority of the Board to issue regulations pursuant to TILA transferred to the Bureau.

TILA, as amended by the Dodd-Frank Act, authorizes the Bureau to ''prescribe regulations to carry out the purposes of [TILA].'' Public Law 111–203, Section 1100A(2); 15 U.S.C. 1604(a). These regulations may contain such classifications, differentiations, or other provisions, and may provide for such adjustments and exceptions for any class of transactions, that in the Bureau's judgment are necessary or proper to effectuate the purpose of TILA, facilitate compliance with TILA, or prevent circumvention or evasion of TILA. *Id.*

IV. Summary of the Final Rule

The Bureau is amending § 1026.52(a) to provide that the limitation on credit card fees applies only during the first year after account opening. The Bureau is also amending the Official Interpretations of § 1026.52(a) to reflect this change and to correct a mathematical error present in the Board's Official Staff Interpretations, and now the Bureau's Official Interpretations, since the Board's January 2010 Final Rule.

The Bureau takes seriously the concerns raised by commenters, particularly with respect to the effect that the rule may have on vulnerable consumers. The Bureau believes, however, that the final rule is necessary to resolve the uncertainty created by the South Dakota litigation discussed above. The Bureau will continue to monitor the credit card market to determine if it should take further action to protect consumers, using one or more of its powers under TILA, the Credit Card Act, or the Dodd-Frank Act.

V. Section 1022(b)(2) of the Dodd-Frank Act

In developing the final rule, the Bureau has conducted an analysis of potential benefits, costs, and impacts,[5] and has consulted or offered to consult with the prudential regulators and the Federal Trade Commission, including regarding consistency with any prudential, market, or systemic objectives administered by such agencies.

The final rule provides that the limitation on credit card account fees in § 1026.52(a) applies only during the first year after account opening. Thus, once the final rule takes effect, fees that a consumer is required to pay prior to account opening are not subject to the limitation in § 1026.52(a).

The Bureau believes that the final rule may impose potential costs on consumers by permitting a creditor to collect fees that would have been disallowed under the Board's April 2011 Final Rule. Card issuers should benefit from clarification of the scope of § 1026.52(a), which will resolve any uncertainty created by the South Dakota litigation. The final rule also permits card issuers to collect fees that were previously prohibited. The Bureau does not expect the final rule to impose costs on card issuers or to cause a reduction in consumer access to credit. All methods of compliance under previous regulation remain available to card issuers. Thus, a card issuer who was previously in compliance with § 1026.52(a) need not take any additional action to remain so.

The final rule has no unique impact on insured depository institutions or insured credit unions with $10 billion or less in assets as described in section 1026 of the Dodd-Frank Act, nor does the final rule have a unique impact on rural consumers.

VI. Regulatory Flexibility Act

The Regulatory Flexibility Act (RFA) generally requires an agency to conduct an initial regulatory flexibility analysis (IRFA) and a final regulatory flexibility analysis (FRFA) of any rule subject to notice-and-comment rulemaking requirements, unless the agency certifies that the rule will not have a significant economic impact on a substantial number of small entities, including small businesses, small governmental units, and small not-for-profit organizations.[6] The RFA defines a ''small business'' as a business that meets the size standard developed by the Small Business Administration pursuant to the Small Business Act.[7] The Bureau also is subject to certain

[3] Public Law 111–203, Section 1061(a)(1). Effective on the designated transfer date, the Bureau was also granted ''all powers and duties'' vested in each of the Federal agencies, relating to the consumer financial protection functions, on the day before the designated transfer date.

[4] Public Law 111–203, Section 1002(14) (defining ''Federal consumer financial law'' to include ''enumerated consumer laws''); *id.* Section 1002(12) (defining ''enumerated consumer laws'' to include TILA).

[5] Specifically, section 1022(b)(2)(A) of the Dodd-Frank Act calls for the Bureau to consider the potential benefits and costs of a regulation to consumers and covered persons, including the potential reduction of access by consumers to consumer financial products or services; the impact on depository institutions and credit unions with $10 billion or less in total assets as described in section 1026 of the Dodd-Frank Act; and the impact on consumers in rural areas. This discussion considers the impacts of the final rule relative to existing law.

[6] 5 U.S.C. 601 *et seq.* The Bureau is not aware of any governmental units or not-for-profit organizations to which the rule would apply.

[7] 5 U.S.C. 601(3). The Bureau may establish an alternative definition after consultation with the Small Business Administration and an opportunity for public comment.

additional procedures under the RFA involving the convening of a panel to consult with small business representatives prior to proposing a rule for which an IRFA is required. 5 U.S.C. 609.

In the April 2012 Proposed Rule, the Bureau did not conduct an IRFA because the Bureau concluded that the proposed rule, if finalized, would not have a significant economic impact on any small entities. The Bureau reasoned that it did not expect the proposal to impose costs on card issuers because if the Bureau adopted the proposal as written, all previous methods of compliance would remain available to small entities. Thus, a small entity already in compliance need not take any additional action. The undersigned therefore certified that the proposed rule would not have a significant economic impact on a substantial number of small entities. 77 FR 21875, 21877 (Apr. 12, 2012). The Bureau did not receive comment with respect to this certification or its underlying reasoning.

The Bureau reiterates its previous conclusion that the overall effect of the final rule is to narrow the compliance obligations under § 1026.52(a) for card issuers and to give card issuers additional certainty about how to comply with § 1026.52(a). Accordingly, the undersigned certifies that this final rule will not have a significant economic impact on a substantial number of small entities.

VII. Paperwork Reduction Act

The collection of information related to this final rule has been previously reviewed and approved by the Office of Management and Budget (OMB) in accordance with the Paperwork Reduction Act of 1995 (44 U.S.C. 3507(d)) and assigned OMB Control Number 3170–0015 (Expiration Date 11/30/15). The Bureau determined that the April 2012 Proposed Rule would not impose any new recordkeeping, reporting, or disclosure requirements on covered entities or members of the public that would constitute collections of information requiring approval under the Paperwork Reduction Act, 44 U.S.C. 3501, *et seq.* The Bureau did not receive any comments regarding this conclusion, to which the Bureau adheres. The Bureau concludes that the final rule, which adopts the proposal in relevant respects, also imposes no new information collection requirements subject to the Paperwork Reduction Act.

With this final rule, card issuers subject to § 1026.52(a) will not have to comply with its fee limitations with respect to fees the consumer is required to pay prior to account opening. The Bureau believes that any burden associated with updating compliance under the final rule is already accounted for in the previously approved burden estimates associated with the collection in Regulation Z under the Board's January 2010 Final Rule. That rule imposed a similar limitation on fees.[8] Accordingly, for the reasons stated above, the Bureau estimates that there is no increase in the one-time or ongoing burden to comply with the requirements under § 1026.52(a).

The Bureau has a continuing interest in the public's opinions of its collections of information. At any time, comments regarding the burden estimate, or any other aspect of this collection of information, including suggestions for reducing the burden, may be sent to: Consumer Financial Protection Bureau, Attention: PRA Office, 1700 G Street NW., Washington, DC 20552, or by the internet to *CFPB_Public_PRA@cfpb.gov*.

List of Subjects in 12 CFR Part 1026

Advertising, Consumer protection, Credit, Credit unions, Mortgages, National banks, Reporting and recordkeeping requirements, Savings associations, Truth in lending.

Authority and Issuance

For the reasons set forth in the preamble, the Bureau amends Regulation Z, 12 CFR part 1026, as set forth below:

PART 1026—TRUTH IN LENDING (REGULATION Z)

■ 1. The authority citation for Part 1026 continues to read as follows:

Authority: 12 U.S.C. 2601; 2603–2605, 2607, 2609, 2617, 5511, 5512, 5532, 5581; 15 U.S.C. 1601 *et seq.*

Subpart G—Special Rules Applicable to Credit Card Accounts and Open-End Credit Offered to College Students

■ 2. Section 1026.52 is amended by revising paragraph (a)(1) to read as follows:

§ 1026.52 Limitations on fees.

(a) *Limitations during first year after account opening.* (1) *General rule.* Except as provided in paragraph (a)(2) of this section, the total amount of fees a consumer is required to pay with respect to a credit card account under an open-end (not home-secured) consumer credit plan during the first year after account opening must not exceed 25 percent of the credit limit in effect when the account is opened. For purposes of this paragraph, an account is considered open no earlier than the date on which the account may first be used by the consumer to engage in transactions.

* * * * *

■ 3. In Supplement I to Part 1026—Official Interpretations:

■ A. Under *Section 1026.52—Limitation on Fees:*

■ i. The heading *52(a) Limitations prior to account opening and during the first year after account opening* is revised.

■ ii. Under *52(a)(1) General rule,* paragraphs 1 and 3 are revised.

■ iii. Under *52(a)(2) Fees not subject to limitations,* paragraph 1 is revised.

The revisions read as follows:

Supplement I to Part 1026—Official Interpretations

* * * * *

Section 1026.52—Limitations on fees.

52(a) Limitations during first year after account opening.

52(a)(1) General rule.

1. *Application.* The 25 percent limit in § 1026.52(a)(1) applies to fees that the card issuer charges to the account as well as to fees that the card issuer requires the consumer to pay with respect to the account through other means (such as through a payment from the consumer's asset account to the card issuer or from another credit account provided by the card issuer). For example:

i. Assume that, under the terms of a credit card account, a consumer is required to pay $120 in fees for the issuance or availability of credit at account opening. The consumer is also required to pay a cash advance fee that is equal to five percent of the cash advance and a late payment fee of $15 if the required minimum periodic payment is not received by the payment due date (which is the twenty-fifth of the month). At account opening on January 1 of year one, the credit limit for the account is $500. Section 1026.52(a)(1) permits the card issuer to charge to the account the $120 in fees for the issuance or availability of credit at account opening. On February 1 of year one, the consumer uses the account for a $100 cash advance. Section 1026.52(a)(1) permits the card issuer to charge a $5 cash-advance fee to the account. On March 26 of year one, the card issuer has not received the consumer's required minimum periodic payment. Section 1026.52(a)(2) permits the card issuer to charge a $15 late payment fee to the account. On July 15 of year one, the consumer uses the account for a $50 cash advance. Section

[8] *See* 75 FR 7791 for the Board's burden analysis under the Paperwork Reduction Act.

1026.52(a)(1) does not permit the card issuer to charge a $2.50 cash advance fee to the account. Furthermore, § 1026.52(a)(1) prohibits the card issuer from collecting the $2.50 cash advance fee from the consumer by other means.

ii. Assume that, under the terms of a credit card account, a consumer is required to pay $125 in fees for the issuance or availability of credit during the first year after account opening. At account opening on January 1 of year one, the credit limit for the account is $500. Section 1026.52(a)(1) permits the card issuer to charge the $125 in fees to the account. However, § 1026.52(a)(1) prohibits the card issuer from requiring the consumer to make payments to the card issuer for additional non-exempt fees with respect to the account during the first year after account opening. Section 1026.52(a)(1) also prohibits the card issuer from requiring the consumer to open a separate credit account with the card issuer to fund the payment of additional non-exempt fees during the first year after the credit card account is opened.

* * * * *

3. *Changes in credit limit during first year.*

i. *Increases in credit limit.* If a card issuer increases the credit limit during the first year after the account is opened, § 1026.52(a)(1) does not permit the card issuer to require the consumer to pay additional fees that would otherwise be prohibited (such as a fee for increasing the credit limit). For example, assume that, at account opening on January 1, the credit limit for a credit card account is $400 and the consumer is required to pay $100 in fees for the issuance or availability of credit. On July 1, the card issuer increases the credit limit for the account to $600. Section 1026.52(a)(1) does not permit the card issuer to require the consumer to pay additional fees based on the increased credit limit.

ii. *Decreases in credit limit.* If a card issuer decreases the credit limit during the first year after the account is opened, § 1026.52(a)(1) requires the card issuer to waive or remove any fees charged to the account that exceed 25 percent of the reduced credit limit or to credit the account for an amount equal to any fees the consumer was required to pay with respect to the account that exceed 25 percent of the reduced credit limit within a reasonable amount of time but no later than the end of the billing cycle following the billing cycle during which the credit limit was reduced. For example, assume that, at account opening on January 1, the credit limit for a credit card account is $1,000 and the consumer is required to pay $250 in fees for the issuance or availability of credit. The billing cycles for the account begin on the first day of the month and end on the last day of the month. On July 30, the card issuer decreases the credit limit for the account to $600. Section 1026.52(a)(1) requires the card issuer to waive or remove $100 in fees from the account or to credit the account for an amount equal to $100 within a reasonable amount of time but no later than August 31.

* * * * *

52(a)(2) Fees not subject to limitations.

1. *Covered fees.* Except as provided in § 1026.52(a)(2), § 1026.52(a) applies to any fees or other charges that a card issuer will or may require the consumer to pay with respect to a credit card account during the first year after account opening, other than charges attributable to periodic interest rates. For example, § 1026.52(a) applies to:

i. Fees that the consumer is required to pay for the issuance or availability of credit described in § 1026.60(b)(2), including any fee based on account activity or inactivity and any fee that a consumer is required to pay in order to receive a particular credit limit;

ii. Fees for insurance described in § 1026.4(b)(7) or debt cancellation or debt suspension coverage described in § 1026.4(b)(10) written in connection with a credit transaction, if the insurance or debt cancellation or debt suspension coverage is required by the terms of the account;

iii. Fees that the consumer is required to pay in order to engage in transactions using the account (such as cash advance fees, balance transfer fees, foreign transaction fees, and fees for using the account for purchases);

iv. Fees that the consumer is required to pay for violating the terms of the account (except to the extent specifically excluded by § 1026.52(a)(2)(i));

v. Fixed finance charges; and

vi. Minimum charges imposed if a charge would otherwise have been determined by applying a periodic interest rate to a balance except for the fact that such charge is smaller than the minimum.

* * * * *

Dated: March 22, 2013.

Richard Cordray,

Director, Bureau of Consumer Financial Protection.

[FR Doc. 2013–07066 Filed 3–27–13; 8:45 am]

BILLING CODE 4810–AM–P

DEPARTMENT OF TRANSPORTATION

Federal Aviation Administration

14 CFR Part 71

[Docket No. FAA–2011–1434; Airspace Docket No. 11–ACE–27]

Amendment of Class E Airspace; West Union, IA

AGENCY: Federal Aviation Administration (FAA), DOT.

ACTION: Final rule.

SUMMARY: This action amends Class E airspace at West Union, IA. Decommissioning of the West Union non-directional beacon (NDB) at George L. Scott Municipal Airport has made reconfiguration necessary for standard instrument approach procedures and for the safety and management of Instrument Flight Rule (IFR) operations at the airport.

DATES: *Effective date:* 0901 UTC, June 27, 2013. The Director of the Federal Register approves this incorporation by reference action under 1 CFR part 51, subject to the annual revision of FAA Order 7400.9 and publication of conforming amendments.

FOR FURTHER INFORMATION CONTACT: Scott Enander, Central Service Center, Operations Support Group, Federal Aviation Administration, Southwest Region, 2601 Meacham Blvd., Fort Worth, TX 76137; telephone 817–321–7716.

SUPPLEMENTARY INFORMATION:

History

On November 30, 2012, the FAA published in the **Federal Register** a notice of proposed rulemaking (NPRM) to amend Class E airspace for the West Union, IA, area, creating additional controlled airspace at George L. Scott Municipal Airport (77 FR 71361) Docket No. FAA–2011–1434. Interested parties were invited to participate in this rulemaking effort by submitting written comments on the proposal to the FAA. No comments were received. Class E airspace designations are published in paragraph 6005 of FAA Order 7400.9W dated August 8, 2012, and effective September 15, 2012, which is incorporated by reference in 14 CFR 71.1. The Class E airspace designations listed in this document will be published subsequently in the Order.

The Rule

This action amends Title 14 Code of Federal Regulations (14 CFR) Part 71 by amending Class E airspace extending upward from 700 feet above the surface

at George L. Scott Municipal Airport, West Union, IA. Decommissioning of the West Union non-directional beacon (NDB) at George L. Scott Municipal Airport has made reconfiguration necessary for standard instrument approach procedures and for the safety and management of Instrument Flight Rule (IFR) operations within a 6.4-mile radius of the airport.

The FAA has determined that this regulation only involves an established body of technical regulations for which frequent and routine amendments are necessary to keep them operationally current. Therefore, this regulation: (1) Is not a ''significant regulatory action'' under Executive Order 12866; (2) is not a ''significant rule'' under DOT Regulatory Policies and Procedures (44 FR 11034; February 26, 1979); and (3) does not warrant preparation of a regulatory evaluation as the anticipated impact is so minimal. Since this is a routine matter that will only affect air traffic procedures and air navigation, it is certified that this rule, when promulgated, will not have a significant economic impact on a substantial number of small entities under the criteria of the Regulatory Flexibility Act.

The FAA's authority to issue rules regarding aviation safety is found in Title 49 of the U.S. Code. Subtitle 1, Section 106, describes the authority of the FAA Administrator. Subtitle VII, Aviation Programs, describes in more detail the scope of the agency's authority. This rulemaking is promulgated under the authority described in Subtitle VII, Part A, Subpart I, Section 40103. Under that section, the FAA is charged with prescribing regulations to assign the use of airspace necessary to ensure the safety of aircraft and the efficient use of airspace. This regulation is within the scope of that authority as it amends controlled airspace at George L. Scott Municipal Airport, West Union, IA.

Environmental Review

The FAA has determined that this action qualifies for categorical exclusion under the National Environmental Policy Act in accordance with FAA Order 1050.1E, ''Environmental Impacts: Policies and Procedures,'' paragraph 311a. This airspace action is not expected to cause any potentially significant environmental impacts, and no extraordinary circumstances exist that warrant preparation of an environmental assessment.

List of Subjects in 14 CFR Part 71

Airspace, Incorporation by reference, Navigation (Air).

Adoption of the Amendment

In consideration of the foregoing, the Federal Aviation Administration amends 14 CFR part 71 as follows:

PART 71—DESIGNATION OF CLASS A, B, C, D, AND E AIRSPACE AREAS; AIR TRAFFIC SERVICE ROUTES; AND REPORTING POINTS

■ 1. The authority citation for 14 CFR part 71 continues to read as follows:

Authority: 49 U.S.C. 106(g), 40103, 40113, 40120; E.O. 10854, 24 FR 9565, 3 CFR, 1959–1963 Comp., p. 389.

§ 71.1 [Amended]

■ 2. The incorporation by reference in 14 CFR 71.1 of the Federal Aviation Administration Order 7400.9W, Airspace Designations and Reporting Points, dated August 8, 2012, and effective September 15, 2012, is amended as follows:

Paragraph 6005 Class E airspace areas extending upward from 700 feet or more above the surface.

* * * * *

ACE IA E5 West Union, IA [Amended]

West Union, George L. Scott Municipal Airport, IA
(Lat. 42°59′06″ N., long. 91°47′26″ W.)

That airspace extending upward from 700 feet above the surface within a 6.4-mile radius of George L. Scott Municipal Airport.

Issued in Fort Worth, Texas, on March 15, 2013.

David P. Medina,

Manager, Operations Support Group, ATO Central Service Center.

[FR Doc. 2013–06908 Filed 3–27–13; 8:45 am]

BILLING CODE 4910–13–P

DEPARTMENT OF TRANSPORTATION

Federal Aviation Administration

14 CFR Part 71

[Docket No. FAA–2012–0656; Airspace Docket No. 12–AGL–5]

Amendment of Class E Airspace; Superior, WI

AGENCY: Federal Aviation Administration (FAA), DOT.

ACTION: Final rule.

SUMMARY: This action amends Class E airspace at Superior, WI. Additional controlled airspace is necessary to accommodate new Area Navigation (RNAV) Standard Instrument Approach Procedures at Richard I. Bong Airport. The airport's geographic coordinates are also adjusted. The FAA is taking this action to enhance the safety and management of Instrument Flight Rule (IFR) operations at the airport.

DATES: Effective date: 0901 UTC, June 27, 2013. The Director of the Federal Register approves this incorporation by reference action under 1 CFR part 51, subject to the annual revision of FAA Order 7400.9 and publication of conforming amendments.

FOR FURTHER INFORMATION CONTACT: Scott Enander, Central Service Center, Operations Support Group, Federal Aviation Administration, Southwest Region, 2601 Meacham Blvd., Fort Worth, TX 76137; telephone 817–321–7716.

SUPPLEMENTARY INFORMATION:

History

On November 30, 2012, the FAA published in the **Federal Register** a notice of proposed rulemaking (NPRM) to amend Class E airspace for the Superior, WI, area, creating additional controlled airspace at Richard I. Bong Airport (77 FR 71363) Docket No. FAA–2012–0656. Interested parties were invited to participate in this rulemaking effort by submitting written comments on the proposal to the FAA. No comments were received. Class E airspace designations are published in paragraph 6005 of FAA Order 7400.9W dated August 8, 2012, and effective September 15, 2012, which is incorporated by reference in 14 CFR 71.1. The Class E airspace designations listed in this document will be published subsequently in the Order.

The Rule

This action amends Title 14 Code of Federal Regulations (14 CFR) Part 71 by amending Class E airspace extending upward from 700 feet above the surface to ensure that required controlled airspace exists from the 6.7-mile radius of the airport to 12.2 miles southeast of the airport to contain aircraft executing new standard instrument approach procedures at Richard I. Bong Airport, Superior, WI. This action enhances the safety and management of IFR operations at the airport. Geographic coordinates of the airport are also updated to coincide with the FAA's aeronautical database.

The FAA has determined that this regulation only involves an established body of technical regulations for which frequent and routine amendments are necessary to keep them operationally current. Therefore, this regulation: (1) Is not a ''significant regulatory action'' under Executive Order 12866; (2) is not a ''significant rule'' under DOT Regulatory Policies and Procedures (44 FR 11034; February 26, 1979); and (3)

does not warrant preparation of a regulatory evaluation as the anticipated impact is so minimal. Since this is a routine matter that will only affect air traffic procedures and air navigation, it is certified that this rule, when promulgated, will not have a significant economic impact on a substantial number of small entities under the criteria of the Regulatory Flexibility Act.

The FAA's authority to issue rules regarding aviation safety is found in Title 49 of the U.S. Code. Subtitle 1, Section 106, describes the authority of the FAA Administrator. Subtitle VII, Aviation Programs, describes in more detail the scope of the agency's authority. This rulemaking is promulgated under the authority described in Subtitle VII, Part A, Subpart I, Section 40103. Under that section, the FAA is charged with prescribing regulations to assign the use of airspace necessary to ensure the safety of aircraft and the efficient use of airspace. This regulation is within the scope of that authority as it amends controlled airspace at Richard I. Bong Airport, Superior, WI.

Environmental Review

The FAA has determined that this action qualifies for categorical exclusion under the National Environmental Policy Act in accordance with FAA Order 1050.1E, ''Environmental Impacts: Policies and Procedures,'' paragraph 311a. This airspace action is not expected to cause any potentially significant environmental impacts, and no extraordinary circumstances exist that warrant preparation of an environmental assessment.

List of Subjects in 14 CFR Part 71

Airspace, Incorporation by reference, Navigation (Air).

Adoption of the Amendment

In consideration of the foregoing, the Federal Aviation Administration amends 14 CFR part 71 as follows:

PART 71—DESIGNATION OF CLASS A, B, C, D, AND E AIRSPACE AREAS; AIR TRAFFIC SERVICE ROUTES; AND REPORTING POINTS

■ 1. The authority citation for 14 CFR Part 71 continues to read as follows:

Authority: 49 U.S.C. 106(g), 40103, 40113, 40120; E.O. 10854, 24 FR 9565, 3 CFR, 1959–1963 Comp., p. 389.

§ 71.1 [Amended]

■ 2. The incorporation by reference in 14 CFR 71.1 of the Federal Aviation Administration Order 7400.9W, Airspace Designations and Reporting Points, dated August 8, 2012, and effective September 15, 2012, is amended as follows:

Paragraph 6005 Class E airspace areas extending upward from 700 feet or more above the surface.

* * * * *

AGL WI E5 Superior, WI [Amended]

Richard I. Bong Airport, WI.
(Lat. 46°41′23″ N., long. 92°05′41″ W.)

That airspace extending upward from 700 feet above the surface within a 6.7-mile radius of Richard I. Bong Airport, and within 2 miles each side of the 140° bearing from the airport extending from the 6.7-mile radius to 12.2 miles southeast of the airport.

Issued in Fort Worth, Texas, on March 15, 2013.

David P. Medina,

Manager, Operations Support Group, ATO Central Service Center.

[FR Doc. 2013–06923 Filed 3–27–13; 8:45 am]

BILLING CODE 4910–13–P

DEPARTMENT OF TRANSPORTATION

Federal Aviation Administration

14 CFR Part 71

[Docket No. FAA–2011–1433; Airspace Docket No. 11–ACE–26]

Amendment of Class E Airspace; Decorah, IA

AGENCY: Federal Aviation Administration (FAA), DOT.

ACTION: Final rule.

SUMMARY: This action amends Class E airspace at Decorah, IA. Decommissioning of the Decorah non-directional beacon (NDB) at Decorah Municipal Airport has made reconfiguration necessary for standard instrument approach procedures and for the safety and management of Instrument Flight Rule (IFR) operations at the airport.

DATES: Effective date: 0901 UTC, June 27, 2013. The Director of the Federal Register approves this incorporation by reference action under 1 CFR part 51, subject to the annual revision of FAA Order 7400.9 and publication of conforming amendments.

FOR FURTHER INFORMATION CONTACT: Scott Enander, Central Service Center, Operations Support Group, Federal Aviation Administration, Southwest Region, 2601 Meacham Blvd., Fort Worth, TX 76137; telephone 817–321–7716.

SUPPLEMENTARY INFORMATION:

History

On November 30, 2012, the FAA published in the **Federal Register** a notice of proposed rulemaking (NPRM) to amend Class E airspace for the Decorah, IA, area, creating additional controlled airspace at Decorah Municipal Airport (77 FR 71362) Docket No. FAA–2011–1433. Interested parties were invited to participate in this rulemaking effort by submitting written comments on the proposal to the FAA. No comments were received. Class E airspace designations are published in paragraph 6005 of FAA Order 7400.9W dated August 8, 2012, and effective September 15, 2012, which is incorporated by reference in 14 CFR 71.1. The Class E airspace designations listed in this document will be published subsequently in the Order.

The Rule

This action amends Title 14 Code of Federal Regulations (14 CFR) part 71 by amending Class E airspace extending upward from 700 feet above the surface at Decorah Municipal Airport, Decorah, IA. Decommissioning of the Decorah NDB at Decorah Municipal Airport has made reconfiguration necessary for standard instrument approach procedures and for the safety and management of IFR operations at the airport.

The FAA has determined that this regulation only involves an established body of technical regulations for which frequent and routine amendments are necessary to keep them operationally current. Therefore, this regulation: (1) Is not a ''significant regulatory action'' under Executive Order 12866; (2) is not a ''significant rule'' under DOT Regulatory Policies and Procedures (44 FR 11034; February 26, 1979); and (3) does not warrant preparation of a regulatory evaluation as the anticipated impact is so minimal. Since this is a routine matter that will only affect air traffic procedures and air navigation, it is certified that this rule, when promulgated, will not have a significant economic impact on a substantial number of small entities under the criteria of the Regulatory Flexibility Act.

The FAA's authority to issue rules regarding aviation safety is found in Title 49 of the U.S. Code. Subtitle 1, Section 106, describes the authority of the FAA Administrator. Subtitle VII, Aviation Programs, describes in more detail the scope of the agency's authority. This rulemaking is promulgated under the authority described in Subtitle VII, Part A, Subpart I, Section 40103. Under that section, the FAA is charged with

prescribing regulations to assign the use of airspace necessary to ensure the safety of aircraft and the efficient use of airspace. This regulation is within the scope of that authority as it amends controlled airspace at Decorah Municipal Airport, Decorah, IA.

Environmental Review

The FAA has determined that this action qualifies for categorical exclusion under the National Environmental Policy Act in accordance with FAA Order 1050.1E, ''Environmental Impacts: Policies and Procedures,'' paragraph 311a. This airspace action is not expected to cause any potentially significant environmental impacts, and no extraordinary circumstances exist that warrant preparation of an environmental assessment.

List of Subjects in 14 CFR Part 71

Airspace, Incorporation by reference, Navigation (Air).

Adoption of the Amendment

In consideration of the foregoing, the Federal Aviation Administration amends 14 CFR part 71 as follows:

PART 71—DESIGNATION OF CLASS A, B, C, D, AND E AIRSPACE AREAS; AIR TRAFFIC SERVICE ROUTES; AND REPORTING POINTS

■ 1. The authority citation for 14 CFR Part 71 continues to read as follows:

Authority: 49 U.S.C. 106(g), 40103, 40113, 40120; E.O. 10854, 24 FR 9565, 3 CFR, 1959–1963 Comp., p. 389.

§ 71.1 [Amended]

■ 2. The incorporation by reference in 14 CFR Part 71.1 of the Federal Aviation Administration Order 7400.9W, Airspace Designations and Reporting Points, dated August 8, 2012, and effective September 15, 2012, is amended as follows:

Paragraph 6005 Class E airspace areas extending upward from 700 feet or more above the surface.

* * * * *

ACE IA E5 Decorah, IA [Amended]

Decorah Municipal Airport, IA
(Lat. 43°16′32″ N., long. 91°44′22″ W.)
Waukon VORTAC
(Lat. 43°16′48″ N., long. 91°32′15″ W.)
Winneshiek County Memorial Hospital, IA
Point in Space Coordinates
(Lat. 43°16′57″ N., long. 91°45′56″ W.)

That airspace extending upward from 700 feet above the surface within a 6.4-mile radius of Decorah Municipal Airport, and within 2 miles each side of the 267° radial of the Waukon VORTAC extending from the 6.4-mile radius to the VORTAC, and within a 6-mile radius of the Point in Space serving Winneshiek County Memorial Hospital.

Issued in Fort Worth, Texas, on March 15, 2013.

David P. Medina,

Manager, Operations Support Group, ATO Central Service Center.

[FR Doc. 2013–06952 Filed 3–27–13; 8:45 am]

BILLING CODE 4910–13–P

DEPARTMENT OF TRANSPORTATION

Federal Aviation Administration

14 CFR Part 71

[Docket No. FAA–2012–0821; Airspace Docket No. 12–ASW–8]

Establishment of Class E Airspace; Beeville, TX

AGENCY: Federal Aviation Administration (FAA), DOT.

ACTION: Final rule.

SUMMARY: This action establishes Class E airspace at Beeville, TX. Controlled airspace is necessary to accommodate new Area Navigation (RNAV) Standard Instrument Approach Procedures at Chase Field Industrial Airport. The FAA is taking this action to enhance the safety and management of Instrument Flight Rule (IFR) operations at the airport.

DATES: *Effective date:* 0901 UTC, June 27, 2013. The Director of the Federal Register approves this incorporation by reference action under 1 CFR Part 51, subject to the annual revision of FAA Order 7400.9 and publication of conforming amendments.

FOR FURTHER INFORMATION CONTACT: Scott Enander, Central Service Center, Operations Support Group, Federal Aviation Administration, Southwest Region, 2601 Meacham Blvd., Fort Worth, TX 76137; telephone 817–321–7716.

SUPPLEMENTARY INFORMATION:

History

On November 30, 2012, the FAA published in the **Federal Register** a notice of proposed rulemaking (NPRM) to establish Class E airspace at Chase Industrial Airport, Beeville, TX (77 FR 71365) Docket No. FAA–2012–0821. Interested parties were invited to participate in this rulemaking effort by submitting written comments on the proposal to the FAA. No comments were received. Class E airspace designations are published in paragraph 6005 of FAA Order 7400.9W dated August 8, 2012, and effective September 15, 2012, which is incorporated by reference in 14 CFR 71.1. The Class E airspace designations listed in this document will be published subsequently in the Order.

The Rule

This action amends Title 14 Code of Federal Regulations (14 CFR) Part 71 by establishing Class E airspace extending upward from 700 feet above the surface within a 6.8-mile radius of Chase Field Industrial Airport, Beeville, TX, to ensure that required controlled airspace exists to contain new standard instrument approach procedures at the airport. This action enhances the safety and management of IFR operations at the airport.

The FAA has determined that this regulation only involves an established body of technical regulations for which frequent and routine amendments are necessary to keep them operationally current. Therefore, this regulation: (1) Is not a ''significant regulatory action'' under Executive Order 12866; (2) is not a ''significant rule'' under DOT Regulatory Policies and Procedures (44 FR 11034; February 26, 1979); and (3) does not warrant preparation of a regulatory evaluation as the anticipated impact is so minimal. Since this is a routine matter that will only affect air traffic procedures and air navigation, it is certified that this rule, when promulgated, will not have a significant economic impact on a substantial number of small entities under the criteria of the Regulatory Flexibility Act.

The FAA's authority to issue rules regarding aviation safety is found in Title 49 of the U.S. Code. Subtitle 1, Section 106, describes the authority of the FAA Administrator. Subtitle VII, Aviation Programs, describes in more detail the scope of the agency's authority. This rulemaking is promulgated under the authority described in Subtitle VII, Part A, Subpart I, Section 40103. Under that section, the FAA is charged with prescribing regulations to assign the use of airspace necessary to ensure the safety of aircraft and the efficient use of airspace. This regulation is within the scope of that authority as it establishes controlled airspace at Chase Field Industrial Airport, Beeville, TX.

Environmental Review

The FAA has determined that this action qualifies for categorical exclusion under the National Environmental Policy Act in accordance with FAA Order 1050.1E, ''Environmental Impacts: Policies and Procedures,'' paragraph 311a. This airspace action is not expected to cause any potentially significant environmental impacts, and no extraordinary circumstances exist

that warrant preparation of an environmental assessment.

List of Subjects in 14 CFR Part 71

Airspace, Incorporation by reference, Navigation (Air).

Adoption of the Amendment

In consideration of the foregoing, the Federal Aviation Administration amends 14 CFR Part 71 as follows:

PART 71—DESIGNATION OF CLASS A, B, C, D, AND E AIRSPACE AREAS; AIR TRAFFIC SERVICE ROUTES; AND REPORTING POINTS

■ 1. The authority citation for 14 CFR Part 71 continues to read as follows:

Authority: 49 U.S.C. 106(g), 40103, 40113, 40120; E. O. 10854, 24 FR 9565, 3 CFR, 1959–1963 Comp., p. 389.

§ 71.1 [Amended]

■ 2. The incorporation by reference in 14 CFR 71.1 of the Federal Aviation Administration Order 7400.9W, Airspace Designations and Reporting Points, dated August 8, 2012, and effective September 15, 2012, is amended as follows:

Paragraph 6005 Class E airspace areas extending upward from 700 feet or more above the surface.

* * * * *

ASW TX E5 Beeville, TX [New]

Chase Field Industrial Airport, TX
(Lat. 28°21′36″ N., long. 97°39′36″ W.)

That airspace extending upward from 700 feet above the surface within a 6.8-mile radius of Chase Field Industrial Airport.

Issued in Fort Worth, Texas, on March 15, 2013.

David P. Medina,

Manager, Operations Support Group, ATO Central Service Center.

[FR Doc. 2013–06913 Filed 3–27–13; 8:45 am]

BILLING CODE 4910–13–P

DEPARTMENT OF TRANSPORTATION

Federal Aviation Administration

14 CFR Part 71

[Docket No. FAA–2012–1098; Airspace Docket No. 12–ACE–5]

Establishment of Class E Airspace; Tecumseh, NE

AGENCY: Federal Aviation Administration (FAA), DOT.

ACTION: Final rule.

SUMMARY: This action establishes Class E airspace at Tecumseh, NE. Controlled airspace is necessary to accommodate new Area Navigation (RNAV) Standard Instrument Approach Procedures at Tecumseh Municipal Airport. The FAA is taking this action to enhance the safety and management of Instrument Flight Rule (IFR) operations at the airport.

DATES: *Effective date:* 0901 UTC, June 27, 2013. The Director of the Federal Register approves this incorporation by reference action under 1 CFR Part 51, subject to the annual revision of FAA Order 7400.9 and publication of conforming amendments.

FOR FURTHER INFORMATION CONTACT: Scott Enander, Central Service Center, Operations Support Group, Federal Aviation Administration, Southwest Region, 2601 Meacham Blvd., Fort Worth, TX 76137; telephone 817–321–7716.

SUPPLEMENTARY INFORMATION:

History

On November 30, 2012, the FAA published in the **Federal Register** a notice of proposed rulemaking (NPRM) to amend Class E airspace for the Tecumseh, NE, area, creating additional controlled airspace at Tecumseh Municipal Airport (77 FR 71368) Docket No. FAA–2012–1098. Interested parties were invited to participate in this rulemaking effort by submitting written comments on the proposal to the FAA. No comments were received. Class E airspace designations are published in paragraph 6005 of FAA Order 7400.9W dated August 8, 2012, and effective September 15, 2012, which is incorporated by reference in 14 CFR 71.1. The Class E airspace designations listed in this document will be published subsequently in the Order.

The Rule

This action amends Title 14 Code of Federal Regulations (14 CFR) Part 71 by establishing Class E airspace extending upward from 700 feet above the surface within a 6.3-mile radius of the airport to ensure that required controlled airspace exists to contain new standard instrument approach procedures at Tecumseh Municipal Airport, Tecumseh, NE. Controlled airspace enhances the safety and management of IFR operations at the airport.

The FAA has determined that this regulation only involves an established body of technical regulations for which frequent and routine amendments are necessary to keep them operationally current. Therefore, this regulation: (1) Is not a ''significant regulatory action'' under Executive Order 12866; (2) is not a ''significant rule'' under DOT Regulatory Policies and Procedures (44 FR 11034; February 26, 1979); and (3) does not warrant preparation of a regulatory evaluation as the anticipated impact is so minimal. Since this is a routine matter that will only affect air traffic procedures and air navigation, it is certified that this rule, when promulgated, will not have a significant economic impact on a substantial number of small entities under the criteria of the Regulatory Flexibility Act.

The FAA's authority to issue rules regarding aviation safety is found in Title 49 of the U.S. Code. Subtitle 1, Section 106, describes the authority of the FAA Administrator. Subtitle VII, Aviation Programs, describes in more detail the scope of the agency's authority. This rulemaking is promulgated under the authority described in Subtitle VII, Part A, Subpart I, Section 40103. Under that section, the FAA is charged with prescribing regulations to assign the use of airspace necessary to ensure the safety of aircraft and the efficient use of airspace. This regulation is within the scope of that authority as it establishes controlled airspace at Tecumseh Municipal Airport, Tecumseh, NE.

Environmental Review

The FAA has determined that this action qualifies for categorical exclusion under the National Environmental Policy Act in accordance with FAA Order 1050.1E, ''Environmental Impacts: Policies and Procedures,'' paragraph 311a. This airspace action is not expected to cause any potentially significant environmental impacts, and no extraordinary circumstances exist that warrant preparation of an environmental assessment.

List of Subjects in 14 CFR Part 71

Airspace, Incorporation by reference, Navigation (Air).

Adoption of the Amendment

In consideration of the foregoing, the Federal Aviation Administration amends 14 CFR Part 71 as follows:

PART 71—DESIGNATION OF CLASS A, B, C, D, AND E AIRSPACE AREAS; AIR TRAFFIC SERVICE ROUTES; AND REPORTING POINTS

■ 1. The authority citation for 14 CFR Part 71 continues to read as follows:

Authority: 49 U.S.C. 106(g), 40103, 40113, 40120; E.O. 10854, 24 FR 9565, 3 CFR, 1959–1963 Comp., p. 389.

§ 71.1 [Amended]

■ 2. The incorporation by reference in 14 CFR 71.1 of the Federal Aviation Administration Order 7400.9W,

Airspace Designations and Reporting Points, dated August 8, 2012, and effective September 15, 2012, is amended as follows:

Paragraph 6005 Class E airspace areas extending upward from 700 feet or more above the surface.

* * * * *

ACE NE E5 Tecumseh, NE [New]

Tecumseh Municipal Airport, NE
(Lat. 40°24′03″ N., long. 96°10′14″ W.)

That airspace extending upward from 700 feet above the surface within a 6.3-mile radius of Tecumseh Municipal Airport.

Issued in Fort Worth, Texas, on March 15, 2013.

David P. Medina,

Manager, Operations Support Group, ATO Central Service Center.

[FR Doc. 2013–06911 Filed 3–27–13; 8:45 am]

BILLING CODE 4910–13–P

DEPARTMENT OF TRANSPORTATION

Federal Aviation Administration

14 CFR Part 97

[Docket No. 30892; Amdt. No. 3527]

Standard Instrument Approach Procedures, and Takeoff Minimums and Obstacle Departure Procedures; Miscellaneous Amendments

AGENCY: Federal Aviation Administration (FAA), DOT.

ACTION: Final rule.

SUMMARY: This rule establishes, amends, suspends, or revokes Standard Instrument Approach Procedures (SIAPs) and associated Takeoff Minimums and Obstacle Departure Procedures for operations at certain airports. These regulatory actions are needed because of the adoption of new or revised criteria, or because of changes occurring in the National Airspace System, such as the commissioning of new navigational facilities, adding new obstacles, or changing air traffic requirements. These changes are designed to provide safe and efficient use of the navigable airspace and to promote safe flight operations under instrument flight rules at the affected airports.

DATES: This rule is effective March 28, 2013. The compliance date for each SIAP, associated Takeoff Minimums, and ODP is specified in the amendatory provisions.

The incorporation by reference of certain publications listed in the regulations is approved by the Director of the Federal Register as of March 28, 2013.

ADDRESSES: Availability of matter incorporated by reference in the amendment is as follows:

For Examination—

1. FAA Rules Docket, FAA Headquarters Building, 800 Independence Avenue SW., Washington, DC 20591;
2. The FAA Regional Office of the region in which the affected airport is located;
3. The National Flight Procedures Office, 6500 South MacArthur Blvd., Oklahoma City, OK 73169; or
4. The National Archives and Records Administration (NARA). For information on the availability of this material at NARA, call 202–741–6030, or go to: *http://www.archives.gov/federal_register/code_of_federal_regulations/ibr_locations.html.*

Availability—All SIAPs are available online free of charge. Visit *nfdc.faa.gov* to register. Additionally, individual SIAP and Takeoff Minimums and ODP copies may be obtained from:

1. FAA Public Inquiry Center (APA–200), FAA Headquarters Building, 800 Independence Avenue SW., Washington, DC 20591; or
2. The FAA Regional Office of the region in which the affected airport is located.

FOR FURTHER INFORMATION CONTACT: Richard A. Dunham III, Flight Procedure Standards Branch (AFS–420), Flight Technologies and Programs Division, Flight Standards Service, Federal Aviation Administration, Mike Monroney Aeronautical Center, 6500 South MacArthur Blvd., Oklahoma City, OK 73169 (Mail Address: P.O. Box 25082, Oklahoma City, OK 73125) telephone: (405) 954–4164.

SUPPLEMENTARY INFORMATION: This rule amends Title 14, Code of Federal Regulations, Part 97 (14 CFR part 97) by amending the referenced SIAPs. The complete regulatory description of each SIAP is listed on the appropriate FAA Form 8260, as modified by the National Flight Data Center (FDC)/Permanent Notice to Airmen (P–NOTAM), and is incorporated by reference in the amendment under 5 U.S.C. 552(a), 1 CFR part 51, and § 97.20 of Title 14 of the Code of Federal Regulations.

The large number of SIAPs, their complex nature, and the need for a special format make their verbatim publication in the **Federal Register** expensive and impractical. Further, airmen do not use the regulatory text of the SIAPs, but refer to their graphic depiction on charts printed by publishers of aeronautical materials. Thus, the advantages of incorporation by reference are realized and publication of the complete description of each SIAP contained in FAA form documents is unnecessary. This amendment provides the affected CFR sections and specifies the types of SIAP and the corresponding effective dates. This amendment also identifies the airport and its location, the procedure and the amendment number.

The Rule

This amendment to 14 CFR part 97 is effective upon publication of each separate SIAP as amended in the transmittal. For safety and timeliness of change considerations, this amendment incorporates only specific changes contained for each SIAP as modified by FDC/P–NOTAMs.

The SIAPs, as modified by FDC P–NOTAM, and contained in this amendment are based on the criteria contained in the U.S. Standard for Terminal Instrument Procedures (TERPS). In developing these changes to SIAPs, the TERPS criteria were applied only to specific conditions existing at the affected airports. All SIAP amendments in this rule have been previously issued by the FAA in a FDC NOTAM as an emergency action of immediate flight safety relating directly to published aeronautical charts. The circumstances which created the need for all these SIAP amendments requires making them effective in less than 30 days.

Because of the close and immediate relationship between these SIAPs and safety in air commerce, I find that notice and public procedure before adopting these SIAPs are impracticable and contrary to the public interest and, where applicable, that good cause exists for making these SIAPs effective in less than 30 days.

Conclusion

The FAA has determined that this regulation only involves an established body of technical regulations for which frequent and routine amendments are necessary to keep them operationally current. It, therefore—(1) is not a ''significant regulatory action'' under Executive Order 12866; (2) is not a ''significant rule'' under DOT regulatory Policies and Procedures (44 FR 11034; February 26, 1979); and (3) does not warrant preparation of a regulatory evaluation as the anticipated impact is so minimal. For the same reason, the FAA certifies that this amendment will not have a significant economic impact on a substantial number of small entities under the criteria of the Regulatory Flexibility Act.

List of Subjects in 14 CFR Part 97

Air Traffic Control, Airports, Incorporation by reference, and Navigation (Air).

Issued in Washington, DC, on March 15, 2013.

John M. Allen,

Director, Flight Standards Service.

Adoption of the Amendment

Accordingly, pursuant to the authority delegated to me, Title 14, Code of Federal regulations, Part 97, 14 CFR part 97, is amended by amending Standard Instrument Approach Procedures, effective at 0901 UTC on the dates specified, as follows:

PART 97—STANDARD INSTRUMENT APPROACH PROCEDURES

■ 1. The authority citation for part 97 continues to read as follows:

Authority: 49 U.S.C. 106(g), 40103, 40106, 40113, 40114, 40120, 44502, 44514, 44701, 44719, 44721–44722.

■ 2. Part 97 is amended to read as follows:

§§97.23, 97.25, 97.27, 97.29, 97.31, 97.33, 97.35 [Amended]

By amending: § 97.23 VOR, VOR/DME, VOR or TACAN, and VOR/DME or TACAN; § 97.25 LOC, LOC/DME, LDA, LDA/DME, SDF, SDF/DME; § 97.27 NDB, NDB/DME; § 97.29 ILS, ILS/DME, MLS, MLS/DME, MLS/RNAV; § 97.31 RADAR SIAPs; § 97.33 RNAV SIAPs; and § 97.35 COPTER SIAPs, Identified as follows:

** * * Effective Upon Publication*

AIRAC date	State	City	Airport	FDC No.	FDC date	Subject
2–May–13	IL	Decatur	Decatur	3/8961	2/25/13	This NOTAM, published in TL 13–08, is hereby rescinded in its entirety.
2–May–13	CQ	Saipan Island	Francisco C. Ada/Saipan Intl	3/0121	3/4/2013	ILS OR LOC/DME RWY 7, Amdt 5D.
2–May–13	CA	Daggett	Barstow-Daggett	3/0199	3/6/2013	VOR OR TACAN RWY 22, Amdt 10.
2–May–13	CA	Daggett	Barstow-Daggett	3/0200	3/6/2013	RNAV (GPS) RWY 22, Amdt 2.
2–May–13	AZ	Taylor	Taylor	3/0203	3/6/2013	GPS RWY 21, Orig-A.
2–May–13	LA	Shreveport	Shreveport Downtown	3/0222	3/4/2013	RNAV (GPS) RWY 14, Orig-A.
2–May–13	LA	Shreveport	Shreveport Downtown	3/0223	3/4/2013	LOC RWY 14, Amdt 4D.
2–May–13	LA	Shreveport	Shreveport Downtown	3/0224	3/4/2013	VOR RWY 14, Amdt 15.
2–May–13	FL	Cross City	Cross City	3/0418	3/6/2013	VOR RWY 31, Amdt 19.
2–May–13	FL	Cross City	Cross City	3/0419	3/6/2013	RNAV (GPS) A, Orig.
2–May–13	FL	Cross City	Cross City	3/0420	3/6/2013	RNAV (GPS) B, Orig.
2–May–13	FL	Cross City	Cross City	3/0421	3/6/2013	RNAV (GPS) RWY 31, Amdt 1.
2–May–13	OR	Eugene	Mahlon Sweet Field	3/0443	3/4/2013	Takeoff Minimums and (Obstacle) DP, Amdt 7.
2–May–13	VA	West Point	Middle Peninsula Rgnl	3/0506	3/6/2013	RNAV (GPS) RWY 28, Orig-A.
2–May–13	KS	Pittsburg	Atkinson Muni	3/0685	3/4/2013	RNAV (GPS) RWY 34, Amdt 2.
2–May–13	KS	Pittsburg	Atkinson Muni	3/0686	3/4/2013	RNAV (GPS) RWY 22, Amdt 1.
2–May–13	KS	Pittsburg	Atkinson Muni	3/0687	3/4/2013	RNAV (GPS) RWY 4, Amdt 1A.
2–May–13	KS	Pittsburg	Atkinson Muni	3/0688	3/4/2013	RNAV (GPS) RWY 16, Amdt 2.
2–May–13	KS	Pittsburg	Atkinson Muni	3/0689	3/4/2013	VOR/DME RWY 4, Amdt 3C.
2–May–13	KY	Danville	Stuart Powell Field	3/0779	3/4/2013	LOC/DME RWY 30, Amdt 1B.
2–May–13	PA	Somerset	Somerset County	3/0804	3/4/2013	RNAV (GPS) RWY 25, Orig.
2–May–13	PA	Somerset	Somerset County	3/0805	3/4/2013	LOC/NDB RWY 25, Amdt 4.
2–May–13	PA	Somerset	Somerset County	3/0806	3/4/2013	RNAV (GPS) RWY 7, Orig.
2–May–13	WY	Worland	Worland Muni	3/0818	3/4/2013	VOR RWY 16, Amdt 6.
2–May–13	WY	Worland	Worland Muni	3/0819	3/4/2013	RNAV (GPS) RWY 16, Orig.
2–May–13	WY	Worland	Worland Muni	3/0820	3/4/2013	RNAV (GPS) RWY 34, Orig.
2–May–13	CA	San Diego	Montgomery Field	3/0997	3/4/2013	ILS OR LOC RWY 28R, Amdt 4.
2–May–13	CA	San Diego	Montgomery Field	3/0998	3/4/2013	RNAV (GPS) RWY 28R, Amdt 1.
2–May–13	GA	Atlanta	Fulton County Airport-Brown Field	3/1121	3/4/2013	RNAV (RNP) Z RWY 8, Amdt 1.
2–May–13	MD	Westminster	Carroll County Rgnl/Jack B Poage Field.	3/1190	3/6/2013	RNAV (GPS) RWY 34, Amdt 1.
2–May–13	MD	Cambridge	Cambridge-Dorchester	3/1191	3/6/2013	NDB OR GPS RWY 34, Amdt 7A.
2–May–13	TN	Clarksville	Outlaw Field	3/1192	3/6/2013	VOR RWY 35, Amdt 15E.

AIRAC date	State	City	Airport	FDC No.	FDC date	Subject
2–May–13	TN	Clarksville	Outlaw Field	3/1193	3/6/2013	LOC RWY 35, Amdt 5E.
2–May–13	TN	Clarksville	Outlaw Field	3/1194	3/6/2013	RNAV (GPS) RWY 35, Orig.
2–May–13	TN	Clarksville	Outlaw Field	3/1195	3/6/2013	RNAV (GPS) RWY 17, Orig.
2–May–13	CO	Telluride	Telluride Rgnl	3/1212	3/4/2013	RNAV (GPS) RWY 9, Orig.
2–May–13	AL	Tuskegee	Moton Field Muni	3/1351	3/6/2013	VOR A, Amdt 4.
2–May–13	CT	New Haven	Tweed-New Haven	3/1392	3/8/2013	ILS OR LOC RWY 2, Amdt 16.
2–May–13	NC	Greensboro	Piedmont Triad Intl	3/1493	3/6/2013	VOR RWY 5R, Amdt 13A.
2–May–13	NC	Greensboro	Piedmont Triad Intl	3/1494	3/6/2013	ILS OR LOC RWY 14, Amdt 18B.
2–May–13	NC	Greensboro	Piedmont Triad Intl	3/1497	3/6/2013	RNAV (GPS) RWY 5R, Amdt 2B.
2–May–13	OK	Poteau	Robert S Kerr	3/1498	3/6/2013	RNAV (GPS) RWY 18, Orig-A.
2–May–13	OK	Poteau	Robert S Kerr	3/1499	3/6/2013	RNAV (GPS) RWY 36, Orig-A.
2–May–13	OK	Poteau	Robert S Kerr	3/1500	3/6/2013	VOR/DME A, Orig.
2–May–13	MD	Stevensville	Bay Bridge	3/1867	3/6/2013	RNAV (GPS) RWY 11, Orig-A.
2–May–13	MD	Stevensville	Bay Bridge	3/1868	3/6/2013	RNAV (GPS) RWY 29, Orig.
2–May–13	MD	Frederick	Frederick Muni	3/1973	3/8/2013	ILS OR LOC RWY 23, Amdt 5C.
2–May–13	MD	Frederick	Frederick Muni	3/1974	3/8/2013	VOR A, Amdt 2B.
2–May–13	MD	Frederick	Frederick Muni	3/1975	3/8/2013	RNAV (GPS) RWY 5, Orig.
2–May–13	MD	Frederick	Frederick Muni	3/1977	3/8/2013	RNAV (GPS) Y RWY 23, Amdt 1A.
2–May–13	MD	Frederick	Frederick Muni	3/1978	3/8/2013	RNAV (GPS) Z RWY 23, Orig-B.
2–May–13	ME	Bangor	Bangor Intl	3/2038	3/8/2013	RADAR 1, Amdt 4C.
2–May–13	WV	Bluefield	Mercer County	3/2387	3/8/2013	RNAV (GPS) RWY 23, Orig.
2–May–13	WV	Bluefield	Mercer County	3/2388	3/8/2013	VOR RWY 23, Amdt 9.
2–May–13	WV	Bluefield	Mercer County	3/2389	3/8/2013	VOR/DME RWY 23, Amdt 5.
2–May–13	WV	Bluefield	Mercer County	3/2390	3/8/2013	ILS OR LOC RWY 23, Amdt 15.
2–May–13	CA	Chico	Chico Muni	3/2536	3/8/2013	RNAV (GPS) RWY 31R, ORIG.
2–May–13	CA	Chico	Chico Muni	3/2537	3/8/2013	VOR/DME RWY 31R, Orig-E.
2–May–13	AZ	Casa Grande	Casa Grande Muni	3/2571	3/8/2013	ILS OR LOC/DME RWY 5, Amdt 6D.
2–May–13	AZ	Casa Grande	Casa Grande Muni	3/2572	3/8/2013	VOR RWY 5, Amdt 4B.
2–May–13	AZ	Casa Grande	Casa Grande Muni	3/2573	3/8/2013	GPS RWY 5, Orig-B.
2–May–13	AZ	Willcox	Cochise County	3/7758	2/27/2013	RNAV (GPS) RWY 3, Amdt 1.
2–May–13	AK	Fairbanks	Fairbanks Intl	3/7821	3/6/2013	RNAV (GPS) RWY 20L, Orig-A.
2–May–13	AK	Anchorage	Ted Stevens Anchorage Intl	3/7880	2/27/2013	RNAV (GPS) RWY 7L, Amdt 2.
2–May–13	AZ	Tucson	Tucson Intl	3/7886	2/27/2013	RNAV (RNP) Y RWY 29R, Orig-B.
2–May–13	AZ	Tucson	Tucson Intl	3/7887	2/27/2013	RNAV (GPS) Z RWY 29R, Amdt 2B.
2–May–13	AZ	Flagstaff	Flagstaff Pulliam	3/8809	3/6/2013	VOR/DME RWY 21, Orig-B.
2–May–13	CO	Lamar	Lamar Muni	3/9105	2/27/2013	RNAV (GPS) RWY 26, Orig-A.
2–May–13	CO	Lamar	Lamar Muni	3/9106	2/27/2013	RNAV (GPS) RWY 36, Amdt 1.
2–May–13	CA	San Jose	Norman Y. Mineta San Jose Intl	3/9384	2/27/2013	RNAV (GPS) Y RWY 12L, Amdt 2.
2–May–13	NE	Columbus	Columbus Muni	3/9435	3/6/2013	VOR RWY 14, Amdt 14C.
2–May–13	NE	Columbus	Columbus Muni	3/9436	3/6/2013	LOC/DME RWY 14, Amdt 8B.
2–May–13	NE	Columbus	Columbus Muni	3/9437	3/6/2013	VOR/DME RWY 32, Amdt 3A.
2–May–13	NE	Columbus	Columbus Muni	3/9438	3/6/2013	RNAV (GPS) RWY 14, Orig-B.

AIRAC date	State	City	Airport	FDC No.	FDC date	Subject
2–May–13	NE	Columbus	Columbus Muni	3/9439	3/6/2013	Takeoff Minimums and (Obstacle) DP, Amdt 5.
2–May–13	NE	Columbus	Columbus Muni	3/9440	3/6/2013	VOR RWY 32, Amdt 14B.
2–May–13	NE	Columbus	Columbus Muni	3/9441	3/6/2013	RNAV (GPS) RWY 32, Orig-A.
2–May–13	WA	Snohomish	Harvey Field	3/9674	3/6/2013	Takeoff Minimums and (Obstacle) DP, Amdt 1.
2–May–13	PA	Pottstown	Heritage Field	3/9810	2/27/2013	GPS RWY 28, Orig-A.
2–May–13	PA	Pottstown	Heritage Field	3/9811	2/27/2013	GPS RWY 10, Orig-A.
2–May–13	PA	Pottstown	Heritage Field	3/9812	2/27/2013	VOR/DME A, Amdt 3B.
2–May–13	PA	Pottstown	Heritage Field	3/9813	2/27/2013	LOC RWY 28, Amdt 2B.
2–May–13	MI	Iron Mountain Kingsford.	Ford	3/9905	3/4/2013	RNAV (GPS) RWY 1, Orig.
2–May–13	MI	Iron Mountain Kingsford.	Ford	3/9906	3/4/2013	RNAV (GPS) RWY 19, Orig.
2–May–13	MI	Iron Mountain Kingsford.	Ford	3/9907	3/4/2013	LOC/DME BC RWY 19, Amdt 13.
2–May–13	MI	Iron Mountain Kingsford.	Ford	3/9908	3/4/2013	ILS OR LOC RWY 1, Amdt 12A.
2–May–13	MI	Iron Mountain Kingsford.	Ford	3/9909	3/4/2013	VOR RWY 31, Amdt 16.
2–May–13	CT	New Haven	Tweed-New Haven	3/9974	3/8/2013	RNAV (GPS) RWY 2, Orig.

[FR Doc. 2013–06786 Filed 3–27–13; 8:45 am]

BILLING CODE 4910–13–P

DEPARTMENT OF TRANSPORTATION

Federal Aviation Administration

14 CFR Part 97

[Docket No. 30891; Amdt. No. 3526]

Standard Instrument Approach Procedures, and Takeoff Minimums and Obstacle Departure Procedures; Miscellaneous Amendments

AGENCY: Federal Aviation Administration (FAA), DOT.

ACTION: Final rule.

SUMMARY: This rule establishes, amends, suspends, or revokes Standard Instrument Approach Procedures (SIAPs) and associated Takeoff Minimums and Obstacle Departure Procedures for operations at certain airports. These regulatory actions are needed because of the adoption of new or revised criteria, or because of changes occurring in the National Airspace System, such as the commissioning of new navigational facilities, adding new obstacles, or changing air traffic requirements. These changes are designed to provide safe and efficient use of the navigable airspace and to promote safe flight operations under instrument flight rules at the affected airports.

DATES: This rule is effective March 28, 2013. The compliance date for each SIAP, associated Takeoff Minimums, and ODP is specified in the amendatory provisions.

The incorporation by reference of certain publications listed in the regulations is approved by the Director of the Federal Register as of March 28, 2013.

ADDRESSES: Availability of matters incorporated by reference in the amendment is as follows:

For Examination—

1. FAA Rules Docket, FAA Headquarters Building, 800 Independence Avenue SW., Washington, DC 20591;

2. The FAA Regional Office of the region in which the affected airport is located;

3. The National Flight Procedures Office, 6500 South MacArthur Blvd., Oklahoma City, OK 73169; or

4. The National Archives and Records Administration (NARA). For information on the availability of this material at NARA, call 202–741–6030, or go to: *http://www.archives.gov/federal_register/code_of_federal_regulations/ibr_locations.html.*

Availability—All SIAPs and Takeoff Minimums and ODPs are available online free of charge. Visit *http://www.nfdc.faa.gov* to register. Additionally, individual SIAP and Takeoff Minimums and ODP copies may be obtained from:

1. FAA Public Inquiry Center (APA–200), FAA Headquarters Building, 800 Independence Avenue SW., Washington, DC 20591; or

2. The FAA Regional Office of the region in which the affected airport is located.

FOR FURTHER INFORMATION CONTACT: Richard A. Dunham III, Flight Procedure Standards Branch (AFS–420), Flight Technologies and Programs Divisions, Flight Standards Service, Federal Aviation Administration, Mike Monroney Aeronautical Center, 6500 South MacArthur Blvd., Oklahoma City, OK 73169 (Mail Address: P.O. Box 25082, Oklahoma City, OK 73125) Telephone: (405) 954–4164.

SUPPLEMENTARY INFORMATION: This rule amends Title 14 of the Code of Federal Regulations, Part 97 (14 CFR part 97), by establishing, amending, suspending, or revoking SIAPs, Takeoff Minimums and/or ODPs. The complete regulators description of each SIAP and its associated Takeoff Minimums or ODP for an identified airport is listed on FAA form documents which are incorporated by reference in this amendment under 5 U.S.C. 552(a), 1 CFR part 51, and 14 CFR part 97.20. The applicable FAA Forms are FAA Forms 8260–3, 8260–4, 8260–5, 8260–15A, and 8260–15B when required by an entry on 8260–15A.

The large number of SIAPs, Takeoff Minimums and ODPs, in addition to their complex nature and the need for a special format make publication in the **Federal Register** expensive and impractical. Furthermore, airmen do not use the regulatory text of the SIAPs, Takeoff Minimums or ODPs, but instead refer to their depiction on charts printed by publishers of aeronautical materials. The advantages of incorporation by reference are realized and publication of the complete description of each SIAP, Takeoff Minimums and ODP listed on FAA forms is unnecessary. This amendment provides the affected CFR

sections and specifies the types of SIAPs and the effective dates of the associated Takeoff Minimums and ODPs. This amendment also identifies the airport and its location, the procedure, and the amendment number.

The Rule

This amendment to 14 CFR part 97 is effective upon publication of each separate SIAP, Takeoff Minimums and ODP as contained in the transmittal. Some SIAP and Takeoff Minimums and textual ODP amendments may have been issued previously by the FAA in a Flight Data Center (FDC) Notice to Airmen (NOTAM) as an emergency action of immediate flight safety relating directly to published aeronautical charts. The circumstances which created the need for some SIAP and Takeoff Minimums and ODP amendments may require making them effective in less than 30 days. For the remaining SIAPs and Takeoff Minimums and ODPs, an effective date at least 30 days after publication is provided.

Further, the SIAPs and Takeoff Minimums and ODPs contained in this amendment are based on the criteria contained in the U.S. Standard for Terminal Instrument Procedures (TERPS). In developing these SIAPs and Takeoff Minimums and ODPs, the TERPS criteria were applied to the conditions existing or anticipated at the affected airports. Because of the close and immediate relationship between these SIAPs, Takeoff Minimums and ODPs, and safety in air commerce, I find that notice and public procedures before adopting these SIAPs, Takeoff Minimums and ODPs are impracticable and contrary to the public interest and, where applicable, that good cause exists for making some SIAPs effective in less than 30 days.

Conclusion

The FAA has determined that this regulation only involves an established body of technical regulations for which frequent and routine amendments are necessary to keep them operationally current. It, therefore—(1) is not a ''significant regulatory action'' under Executive Order 12866; (2) is not a ''significant rule'' under DOT Regulatory Policies and Procedures (44 FR 11034; February 26, 1979); and (3) does not warrant preparation of a regulatory evaluation as the anticipated impact is so minimal. For the same reason, the FAA certifies that this amendment will not have a significant economic impact on a substantial number of small entities under the criteria of the Regulatory Flexibility Act.

List of Subjects in 14 CFR Part 97

Air Traffic Control, Airports, Incorporation by reference, and Navigation (air).

Issued in Washington, DC, on March 15, 2013.

John M. Allen,

Director, Flight Standards Service.

Adoption of the Amendment

Accordingly, pursuant to the authority delegated to me, Title 14, Code of Federal Regulations, Part 97 (14 CFR part 97) is amended by establishing, amending, suspending, or revoking Standard Instrument Approach Procedures and/or Takeoff Minimums and/or Obstacle Departure Procedures effective at 0902 UTC on the dates specified, as follows:

PART 97—STANDARD INSTRUMENT APPROACH PROCEDURES

■ 1. The authority citation for part 97 continues to read as follows:

Authority: 49 U.S.C. 106(g), 40103, 40106, 40113, 40114, 40120, 44502, 44514, 44701, 44719, 44721–44722.

■ 2. Part 97 is amended to read as follows:

Effective 2 MAY 2013

Sand Point, AK, Sand Point, BORLAND ONE, Graphic DP
Sand Point, AK, Sand Point, Takeoff Minimums and Obstacle DP, Amdt 4
Bentonville, AR, Bentonville Muni/Louise M. Thaden Field, Takeoff Minimums and Obstacle DP, Amdt 1A
Fort Lauderdale, FL, Fort Lauderdale Executive, Takeoff Minimums and Obstacle DP, Amdt 3
Jacksonville, FL, Jacksonville Intl, RNAV (GPS) Z RWY 14, Amdt 2A
Orlando, FL, Orlando Sanford Intl, Takeoff Minimums and Obstacle DP, Amdt 10
Pompano Beach, FL, Pompano Beach Airpark, Takeoff Minimums and Obstacle DP, Amdt 4
Zephyrhills, FL, Zephyrhills Muni, RNAV (GPS) RWY 4, Orig-A
Chicago, IL, Chicago O'Hare Intl, Takeoff Minimums and Obstacle DP, Amdt 18
Patterson, LA, Harry P Williams Memorial, ILS OR LOC/DME RWY 24, Amdt 2B
Faribault, MN, Faribault Muni, RNAV (GPS) RWY 12, Amdt1
Faribault, MN, Faribault Muni, RNAV (GPS) RWY 30, Amdt1
Minneapolis, MN, Minneapolis-St Paul Intl/ Wold-Chamberlain, Takeoff Minimums and Obstacle DP, Amdt 12
Pipestone, MN, Pipestone Muni, RNAV (GPS) RWY 18, Amdt 1
Pipestone, MN, Pipestone Muni, RNAV (GPS) RWY 36, Amdt 1
Camdenton, MO, Camdenton Memorial, VOR–A, Amdt 5
Columbia, MO, Columbia Rgnl, ILS OR LOC/ DME RWY 2, Amdt 15
Fort Leonard Wood, MO, Waynesville-St. Robert Rgnl Forney Fld, ILS OR LOC RWY 14, Amdt 1
Kaiser Lake Ozark, MO, Lee C Fine Memorial, LOC/DME RWY 22, Amdt 2
Kaiser Lake Ozark, MO, Lee C Fine Memorial, VOR RWY 4, Amdt 7
Osage Beach, MO, Grand Glaize-Osage Beach, VOR RWY 32, Amdt 6
Poplar, MT, Poplar Muni, RNAV (GPS) RWY 9, Orig
Poplar, MT, Poplar Muni, RNAV (GPS) RWY 27, Amdt 1
Mount Olive, NC, Mount Olive Muni, RNAV (GPS) RWY 5, Orig
Mount Olive, NC, Mount Olive Muni, RNAV (GPS) RWY 23, Orig
New Bern, NC, Coastal Carolina Regional, VOR RWY 22, Amdt 3
Raleigh/Durham, NC, Raleigh-Durham Intl, RNAV (RNP) Z RWY 5L, Amdt 2
Raleigh/Durham, NC, Raleigh-Durham Intl, RNAV (RNP) Z RWY 5R, Amdt 2
Raleigh/Durham, NC, Raleigh-Durham Intl, RNAV (RNP) Z RWY 23L, Amdt 2
Raleigh/Durham, NC, Raleigh-Durham Intl, RNAV (RNP) Z RWY 23R, Amdt 2
Pembina, ND, Pembina Muni, RNAV (GPS) RWY 33, Orig
Pembina, ND, Pembina Muni, VOR–A, Orig
Pembina, ND, Pembina Muni, VOR OR GPS RWY 33, Amdt 6B, CANCELED
Albuquerque, NM, Albuquerque Intl Sunport, RNAV (GPS) RWY 17, Orig-A, CANCELED
Albuquerque, NM, Albuquerque Intl Sunport, RNAV (GPS) RWY 35, Amdt 1A, CANCELED
Kingston, NY, Kingston-Ulster, Takeoff Minimums and Obstacle DP, Amdt 1
New York, NY, John F Kennedy Intl, RNAV (GPS) RWY 22R, Amdt 1C
Mount Gilead, OH, Morrow County, VOR–A, Amdt 4
Mount Vernon. OH, Knox County, VOR–A, Amdt 8
Weatherford, OK, Thomas P Stafford, RNAV (GPS) RWY 17, Amdt 1
Weatherford, OK, Thomas P Stafford, RNAV (GPS) RWY 35, Amdt 1
Astoria, OR, Astoria Rgnl, GPS RWY 8, Orig, CANCELED
Astoria, OR, Astoria Rgnl, RNAV (GPS) RWY 8, Orig
Altoona, PA, Altoona-Blair County, RNAV (GPS) Y RWY 3, Amdt 1
Madison, SD, Madison Muni, NDB RWY 15, Amdt 10, CANCELED
Dallas-Fort Worth, TX, Dallas/Fort Worth Intl, CONVERGING ILS RWY 17C, Amdt 7
Dallas-Fort Worth, TX, Dallas/Fort Worth Intl, CONVERGING ILS RWY 35C, Amdt 2
Dallas-Fort Worth, TX, Dallas/Fort Worth Intl, ILS OR LOC RWY 35C, ILS
RWY 35C (CAT II), ILS RWY 35C (CAT III), ILS RWY 35C (SA CAT I), Amdt 2
Dallas-Fort Worth, TX, Dallas/Fort Worth Intl, RNAV (GPS) RWY 35C, Amdt 3
Clarksville, VA, Lake Country Regional, RNAV (GPS) RWY 4, Orig-A
Roanoke, VA, Roanoke Rgnl/Woodrum Field, Takeoff Minimums and Obstacle DP, Amdt 10

Effective 30 MAY 2013

Dallas, TX, Dallas Love Field, ILS OR LOC RWY 31R, Amdt 5B

[FR Doc. 2013–06793 Filed 3–27–13; 8:45 am]

BILLING CODE 4910–13–P

DEPARTMENT OF COMMERCE

Bureau of Industry and Security

15 CFR Part 744

[Docket No. 130222155–3155–01]

RIN 0694–AF89

Addition of Certain Persons to the Entity List; Removal of Person From the Entity List Based on Removal Request; Implementation of Entity List Annual Review Changes

AGENCY: Bureau of Industry and Security, Commerce.

ACTION: Final rule.

SUMMARY: This rule amends the Export Administration Regulations (EAR) by adding eighteen persons to the Entity List (Supplement No. 4 to Part 744) under nineteen entries. These persons have been determined by the U.S. Government to be acting contrary to the national security or foreign policy interests of the United States on the basis of § 744.11 of the EAR. These persons will be listed on the Entity List under China, Germany, Hong Kong, Ukraine, and United Arab Emirates. This rule also revises one entry under Germany to clarify the scope of the entry by providing two additional alternate addresses for the listed person. This rule further removes one entry under Canada as the result of a successful removal request. Finally, this rule notifies the public that the End-User Review Committee (ERC) has completed Annual Reviews of Afghanistan, Greece, India, Russia, and Ukraine and that no changes are being made to the Entity List as a result of these reviews. The Entity List provides notice to the public that certain exports, reexports, and transfers (in-country) to entities identified on the Entity List require a license from the Bureau of Industry and Security (BIS) and that availability of license exceptions in such transactions is limited.

DATES: *Effective Date:* This rule is effective March 28, 2013.

FOR FURTHER INFORMATION CONTACT: Karen Nies-Vogel, Chair, End-User Review Committee, Office of the Assistant Secretary, Export Administration, Bureau of Industry and Security, Department of Commerce, Phone: (202) 482–5991, Fax: (202) 482–3911, Email: *ERC@bis.doc.gov.*

SUPPLEMENTARY INFORMATION:

Background

The Entity List (Supplement No. 4 to Part 744) notifies the public about entities that have engaged in activities that could result in an increased risk of the diversion of exported, reexported, or transferred (in-country) items to weapons of mass destruction (WMD) programs. Since its initial publication, grounds for inclusion on the Entity List have expanded to include activities sanctioned by the State Department and activities deemed contrary to the United States' national security or foreign policy interests, including terrorism-related activities and export control-related violations involving abuse of human rights. Certain exports, reexports, and transfers (in-country) to entities identified on the Entity List require licenses from BIS and are usually subject to a policy of denial. The availability of license exceptions in such transactions is very limited. The license review policy for each entity is identified in the License Review Policy column on the Entity List and the availability of license exceptions is published in the **Federal Register** notices adding persons to the Entity List. BIS places entities on the Entity List based on certain sections of part 744 (Control Policy: End-User and End-Use Based) of the EAR.

The ERC, composed of representatives of the Departments of Commerce (Chair), State, Defense, Energy and, where appropriate, the Treasury, makes all decisions regarding additions to, removals from, or other modifications to the Entity List. The ERC makes all decisions to add an entry to the Entity List by majority vote and all decisions to remove or modify an entry by unanimous vote.

ERC Entity List Decisions

Additions to the Entity List

This rule implements the decision of the ERC to add eighteen persons under nineteen entries to the Entity List on the basis of § 744.11 (License requirements that apply to entities acting contrary to the national security or foreign policy interests of the United States) of the EAR. The eighteen persons under nineteen entries consist of two entities in China, one entity in Germany, four entities in Hong Kong, one entity in Ukraine and eleven entities in the United Arab Emirates (U.A.E.). The ERC reviewed § 744.11(b) (Criteria for revising the Entity List) in making the determination to add these eighteen persons under nineteen entries to the Entity List. Under that paragraph, persons for whom there is reasonable cause to believe, based on specific and articulable facts, that the persons have been involved, are involved, or pose a significant risk of being or becoming involved in, activities that are contrary to the national security or foreign policy interests of the United States and those acting on behalf of such persons may be added to the Entity List. Paragraphs (b)(1)–(b)(5) of § 744.11 include an illustrative list of activities that could be contrary to the national security or foreign policy interests of the United States.

The eighteen persons under nineteen entries being added to the Entity List under this rule have been determined by the ERC to be involved in activities that are contrary to the national security or foreign policy interests of the United States. One of the persons being added to the Entity List under this rule, Ukrspetexport, is located in Ukraine. Ukrspetexport, Ukraine's state-owned arms trader, exported military equipment to a country on the State Department's State Sponsors of Terrorism List. Therefore, pursuant to § 744.11(b) of the EAR, the ERC determined that Ukrspetexport knowingly and willfully engaged in activities contrary to US national security and foreign policy interests.

The ERC has reasonable cause to believe that the one person being listed under Germany, Manufacturers Equipment Organization (MEO), a company headquartered in Germany, assisted other persons already listed on the Entity List, specifically Christof Schneider and Schneider GMBH, in transactions involving items subject to the EAR. Mr. Schneider and his company were listed on the Entity List in a **Federal Register** Notice published July 21, 2009 (74 FR 35797) as a result of a February 5, 2009 indictment stemming from unlawful attempted shipments to Iran of petrochemical equipment. The consignee on the recent transaction, in which MEO assisted Schneider, also had links to the Iranian petrochemical industry. Based on Schneider's notorious activities, MEO's participation with Schneider in the export of items subject to the EAR to Iranian interests has led the ERC to determine that MEO engaged in activities contrary to U.S. national security and foreign policy interests and poses a high risk of involvement in violations of the EAR.

The ERC also has reasonable cause to believe that eight of the persons being added under this rule, all listed under the U.A.E., Afsari General Trading LLC,

Ghasem Afsari, Mohamad Javad, Moh Khoman, aBensa FZ LLC, Alex Ardalan, Next Gulf Trading LLC and Dr. Artush Parsi, actively engaged with Iran in the trade of items subject to the EAR and actively misled U.S. exporters and the U.S. Government in an attempt to disguise their illicit activities. Specifically, the above-referenced persons took the following actions: they portrayed themselves as the ultimate consignees for items subject to the EAR that, during subsequent end-use checks (EUCs) conducted by BIS Special Agents, could not be located, claimed to have purchased the items on behalf of customers who in fact did not exist, and claimed to have purchased the items on behalf of customers who denied any relationship with any of the eight persons. Based on their actions and their known connections to Iran, the ERC has determined that these persons are engaged in activities contrary to U.S. national security and foreign policy interests and pose a high risk of involvement in violations of the EAR.

The ERC further has reasonable cause to believe that three of the persons being listed under this rule, also located in the U.A.E., Liberty House Trading LLC, Hamid Rashed, and David Khayam, attempted to procure items subject to the EAR on behalf of entities in Iran that support the Iranian government's nuclear and missile programs. Additionally, these three persons actively misled U.S. exporters and the U.S. Government as to the true destination of those items. After refusing to allow BIS to conduct a post-shipment verification check (PSV), Liberty House Trading LLC began doing business under the name Baet Alhoreya Electronics Trading (Baet Alhoreya). BIS was eventually able to conduct a PSV at the offices of Baet Alhoreya, which was negative. Based on their actions, the ERC has determined that Liberty House, Baet Alhoreya and certain individuals employed by the company (*i.e.,* Hamid Rashed and David Khayam) are engaged in activities contrary to U.S. national security and foreign policy interests and pose a high risk of involvement in violations of the EAR.

Additionally, the ERC has reasonable cause to believe that the five persons being listed in six entries under China and Hong Kong, Giant Base Asia Limited, Jadeshine, Jadeshine Engineering HK Co, Jadeshine Engineering (HK) Co., and Jason Shuai, obtained a U.S.-origin laser system and provided it to the Chinese Academy of Launch Vehicle Technology (CALT), which is involved in the design, development or production of rocket systems for China. Pursuant to § 744.3(a)(3) of the EAR, a license is required for the shipment of any item subject to the EAR that will be used in the design, development or production of rocket systems by a Country Group D:4 country (including China). Therefore, based on their actions, the ERC has determined that these five persons are engaged in activities contrary to U.S. national security and foreign policy interests and pose a high risk of involvement in violations of the EAR.

Pursuant to § 744.11(b)(3) and (b)(5) of the EAR, the ERC determined that the above conduct raises sufficient concern that prior review of exports, reexports, or transfers (in-country) of items subject to the EAR involving these eighteen persons under nineteen entries being listed on the Entity List, and the possible imposition of license conditions or license denials, will enhance BIS's ability to prevent violations of the EAR. For the eighteen persons under nineteen entries being added to the Entity List, the ERC specified a license requirement for all items subject to the EAR and established a license application review policy of a presumption of denial. The license requirement applies to any transaction in which items are to be exported, reexported, or transferred (in-country) to such persons or in which such persons acts as purchaser, intermediate consignee, ultimate consignee, or end-user. In addition, no license exceptions are available for exports, reexports, or transfers (in-country) to the eighteen persons under nineteen entries being added to the Entity List.

This final rule adds the following eighteen persons under nineteen entries to the Entity List:

China

(1) *Jadeshine,*

R1102 B Tainyuangang Center, Dong San Bei Lu Bing 2, Chaoyang District, Beijing, China;

(2) *Jadeshine Engineering HK Co.,*

Shanghai, China; *and* Langfang, China.

Germany

(1) *Manufacturers Equipment Organization (MEO),* a.k.a. the following one alias:

—MEO GMBH

P.O Box 501168, D–42904, Wermelskirchen, Germany; *and*

Neuenhaus 96, 42929, Wermelskirchen, Germany.

Hong Kong

(1) *Giant Base Asia Limited,*

Room 2205, 22/F, Kowloon Building, 555 Nathan Road, Hong Kong;

(2) *Jadeshine Engineering (HK) Co.,*

Room 702, Boss Commercial Centre, Ferry Street 38, Kowloon, Hong Kong;

(3) *Jadeshine Engineering HK Co.,*

G/F Blk C, 255 Tau Wai, DD 123 Lot, Yuen Long, Hong Kong;

(4) *Jason Shuai,* a.k.a. the following one alias:

—Jason Shine

Hong Kong.

Ukraine

(1) *Ukrspetexport,*

36 Degtiarivska Blvd., Ukraine 04119 Kyiv.

United Arab Emirates

(1) *aBensa FZ LLC,* a.k.a. the following one alias:

—BiotaGroup Company

Al Thuraya Tower 1, 9th Floor, Office 907, P.O. Box: 500097, Dubai, U.A.E.; *and*

Al Thuraya Tower 1, Media City, Dubai, U.A.E.;

(2) *Afsari General Trading LLC,*

Mezzanine Fl, No. M–7, Al Bakhit Centre, Abu-Bakr Rd, Deira, Dubai, U.A.E.; *and*

No. 405, Albakhit Centre, Abu-Bakr, AE-Dubai, U.A.E.; *and*

P.O. Box 40150, Al Bakhit Centre, Messanine Floor, M–7, Deira, Dubai, U.A.E.;

(3) *Alex Ardalan,*

Al Thuraya Tower 1, 9th Floor, Office 907, P.O. Box: 500097, Dubai, U.A.E.;

(4) *David Khayam,*

Apt #1811 Manchester Tower, Dubai Marina, Dubai, U.A.E.; *and*

PO Box 111831, Al Daghaya, Dubai, U.A.E.; *and*

Dubai Shopping Center, Office 13, Dubai, U.A.E.;

(5) *Dr. Artush Parsi,*

No. 75 Noor Mohammed Taleb Building, Opposite to Ascot Hotel, Khaleed-bin-Valid Rd, Bur Dubai, Dubai, U.A.E.; *and*

No. 7 Noor Mohammad Taleb Bldg. Opp. Ascot Hotel Khalid Bin Rd, Dubai, U.A.E.; *and*

No. 705, Noor Mohammad Taleb Bldg, Bin Valid Road, Dubai, U.A.E.; *and*

P.O. Box 122114, Dubai, U.A.E.; *and*

P.O. 111837, Dubai, U.A.E.;

(6) *Ghasem Afsari,*

No. 405, Albakhit Centre, Abu-Bakr, AE-Dubai, U.A.E.; *and*

P.O. Box 40150, Al Bakhit Centre, Messanine Floor, M–7, Deira, Dubai, U.A.E.; *and*

Mezzanine Fl, No. M–7, Al Bakhit Centre, Abu-Bakr Rd, Deira, Dubai, U.A.E.; *and*

No. 75 Noor Mohammed Taleb Building, Opposite to Ascot Hotel, Khaleed-bin-Valid Rd, Bur Dubai, Dubai, U.A.E.; *and*
No. 7 Noor Mohammad Taleb Bldg. Opp. Ascot Hotel Khalid Bin Rd, Dubai, U.A.E.; *and*
No. 705, Noor Mohammad Taleb Bldg, Bin Valid Road, Dubai, U.A.E.; *and*
P.O. Box 122114, Dubai, U.A.E.; *and*
P.O. 111837, Dubai, U.A.E.;

(7) *Hamid Rashed,*

Apt #1811 Manchester Tower, Dubai Marina, Dubai, U.A.E.; *and*
PO Box 111831, Al Daghaya, Dubai, U.A.E.; *and*
Dubai Shopping Center, Office 13, Dubai, U.A.E.;

(8) *Liberty House Trading LLC,* a.k.a. the following two aliases:

—Baet Alhoreya Electronics Trading; *and*
—Baet Alhoreya,
Apt #1811 Manchester Tower, Dubai Marina, Dubai, U.A.E.; *and*
PO Box 111831, Al Daghaya, Dubai, U.A.E.; *and*
Dubai Shopping Center, Office 13, Dubai, U.A.E.*;*

(9) *Moh Khoman,*

No. 405, Albakhit Centre, Abu-Bakr, AE-Dubai, U.A.E.; *and*
P.O. Box 40150, Al Bakhit Centre, Messanine Floor, M–7, Deira, Dubai, U.A.E.; *and*
Mezzanine Fl, No. M–7, Al Bakhit Centre, Abu-Bakr Rd, Deira, Dubai, U.A.E.;

(10) Mohamad Javad,

No. 405, Albakhit Centre, Abu-Bakr, AE-Dubai, U.A.E.; *and*
P.O. Box 40150, Al Bakhit Centre, Messanine Floor, M–7, Deira, Dubai, U.A.E.; *and*
Mezzanine Fl, No. M–7, Al Bakhit Centre, Abu-Bakr Rd, Deira, Dubai, U.A.E.;

(11) *Next Gulf Trading LLC,*

No. 75 Noor Mohammed Taleb Building, Opposite to Ascot Hotel, Khaleed-bin-Valid Rd, Bur Dubai, Dubai, U.A.E.; *and*
No. 7 Noor Mohammad Taleb Bldg. Opp. Ascot Hotel Khalid Bin Rd, Dubai, U.A.E.; *and*
No. 705, Noor Mohammad Taleb Bldg, Bin Valid Road, Dubai, U.A.E.; *and*
P.O. Box 122114, Dubai, U.A.E.; *and*
P.O. 111837, Dubai, U.A.E.

Modification to the Entity List

On the basis of a decision made by the ERC, in addition to the eighteen persons under nineteen entries described above, this rule amends one entry currently on the Entity List under Germany. The amendment provides two alternate addresses for this listed person, as follows:

Germany

(1) *Christof Schneider,*

Margaretenweg #10, 42929 Wermelskirchen, Germany; *and*
P.O Box 501168, D–42904, Wermelskirchen, Germany; *and*
Neuenhaus 96, 42929, Wermelskirchen, Germany.

Removal From the Entity List

This rule implements an ERC decision to remove one person, Atlas Electronic Systems, located in Canada, from the Entity List as a result of the person's successful request for removal. Based upon the review of the information provided in the removal request in accordance with § 744.16 (Procedure for requesting removal or modification of an Entity List entity), and after review by the ERC's member agencies, the ERC determined that Atlas Electronic Systems should be removed from the Entity List.

The ERC's decision to remove Atlas Electronic Systems took into account its cooperation with the U.S. Government, as well as its assurances of future compliance with the EAR. In accordance with § 744.16(c), the Deputy Assistant Secretary for Export Administration has sent written notification to Atlas Electronic Systems, informing it of the ERC's decision to remove them from the Entity List. This final rule implements the decision to remove the following person from the Entity List:

Canada

(1) *Atlas Electronic Systems (AES),*

7320 St. Jacques St., W. Montreal, QC, H4B1W1, Canada.

The removal of the above-referenced entity on the basis of a § 744.16 removal request that was approved by the ERC, eliminates the existing license requirements in Supplement No. 4 to part 744 for exports, reexports, and transfers (in-country) to this entity. However, the removal of this entity from the Entity List does not relieve persons of other obligations under part 744 of the EAR or under other parts of the EAR. Neither the removal of an entity from the Entity List nor the removal of Entity List-based license requirements relieves persons of their obligations under General Prohibition 5 in § 736.2(b)(5) of the EAR which provides that, ''you may not, without a license, knowingly export or reexport any item subject to the EAR to an end-user or end-use that is prohibited by part 744 of the EAR.'' Additionally, this removal does not relieve persons of their obligation to apply for export, reexport, or in-country transfer licenses required by other provisions of the EAR. BIS strongly urges the use of Supplement No. 3 to part 732 of the EAR, ''BIS's 'Know Your Customer' Guidance and Red Flags,'' when persons are involved in transactions that are subject to the EAR.

Annual Review of the Entity List

This rule also provides notice that the ERC has concluded annual reviews of the Entity List for entities located in five countries, in accordance with the procedures outlined in Supplement No. 5 to part 744 (Procedures for End-User Review Committee Entity List Decisions). The ERC has concluded its annual review for entities located in Afghanistan, Greece, India, Russia, and Ukraine. No changes are made to the Entity List as a result of these reviews. The changes from the annual review of the Entity List that are approved by the ERC are implemented in stages as the ERC completes its review of entities listed under different destinations on the Entity List.

Savings Clause

Shipments of items removed from eligibility for a License Exception or export or reexport without a license (NLR) as a result of this regulatory action that were en route aboard a carrier to a port of export or reexport, on March 28, 2013, pursuant to actual orders for export or reexport to a foreign destination, may proceed to that destination under the previous eligibility for a License Exception or export or reexport without a license (NLR).

Although the Export Administration Act expired on August 20, 2001, the President, through Executive Order 13222 of August 17, 2001, 3 CFR, 2001 Comp., p. 783 (2002), as amended by Executive Order 13637 of March 8, 2013, 78 FR 16129 (March 13, 2013), and as extended by the Notice of August 15, 2012, 77 FR 49699 (August 16, 2012), has continued the Export Administration Regulations in effect under the International Emergency Economic Powers Act. BIS continues to carry out the provisions of the Export Administration Act, as appropriate and to the extent permitted by law, pursuant to Executive Order 13222.

Rulemaking Requirements

1. This rule has been determined to be not significant for purposes of Executive Order 12866.

2. Notwithstanding any other provision of law, no person is required to respond to nor be subject to a penalty for failure to comply with a collection of information, subject to the requirements of the Paperwork Reduction Act of 1995 (44 U.S.C. 3501 *et seq.*) (PRA), unless that collection of information displays a currently valid Office of Management and Budget (OMB) Control Number. This regulation involves collections previously approved by the OMB under control numbers 0694–0088, ''Multi-Purpose Application,'' which carries a burden hour estimate of 43.8 minutes for a manual or electronic submission. This rule does not alter any information collection requirements; therefore, total burden hours associated with the PRA and OMB control number 0694–0088 are not expected to increase as a result of this rule. You may send comments regarding the collection of information associated with this rule, including suggestions for reducing the burden, to Jasmeet K. Seehra, Office of Management and Budget (OMB), by email to *Jasmeet_K._Seehra@omb.eop.gov,* or by fax to (202) 395–7285.

3. This rule does not contain policies with Federalism implications as that term is defined in Executive Order 13132.

4. The provisions of the Administrative Procedure Act (5 U.S.C. 553) requiring notice of proposed rulemaking, the opportunity for public comment, and a 30-day delay in effective date are inapplicable because this regulation involves a military or foreign affairs function of the United States. (See 5 U.S.C. 553(a)(1)). BIS implements this rule to protect U.S. national security or foreign policy interests by preventing items from being exported, reexported, or transferred (in country) to the persons being added to the Entity List. If this rule were delayed to allow for notice and comment and a delay in effective date, then entities being added to the Entity List by this action would continue to be able to receive items without a license and to conduct activities contrary to the national security or foreign policy interests of the United States. In addition, because these parties may receive notice of the U.S. Government's intention to place these entities on the Entity List once a final rule was published it would create an incentive for these persons to either accelerate receiving items subject to the EAR to conduct activities that are contrary to the national security or foreign policy interests of the United States and/or to take steps to set up additional aliases, change addresses, and take other steps to try to limit the impact of the listing on the Entity List once a final rule was published. Further, no other law requires that a notice of proposed rulemaking and an opportunity for public comment be given for this rule. Because a notice of proposed rulemaking and an opportunity for public comment are not required to be given for this rule by 5 U.S.C. 553, or by any other law, the analytical requirements of the Regulatory Flexibility Act, 5 U.S.C. 601 et seq., are not applicable.

List of Subject in 15 CFR Part 744

Exports, Reporting and recordkeeping requirements, Terrorism.

Accordingly, part 744 of the Export Administration Regulations (15 CFR parts 730–774) is amended as follows:

PART 744—[AMENDED]

■ 1. The authority citation for 15 CFR part 744 continues to read as follows:

Authority: 50 U.S.C. app. 2401 *et seq.;* 50 U.S.C. 1701 *et seq.;* 22 U.S.C. 3201 *et seq.;* 42 U.S.C. 2139a; 22 U.S.C. 7201 *et seq.;* 22 U.S.C. 7210; E.O. 12058, 43 FR 20947, 3 CFR, 1978 Comp., p. 179; E.O. 12851, 58 FR 33181, 3 CFR, 1993 Comp., p. 608; E.O. 12938, 59 FR 59099, 3 CFR, 1994 Comp., p. 950; E.O. 12947, 60 FR 5079, 3 CFR, 1995 Comp., p. 356; E.O. 13026, 61 FR 58767, 3 CFR, 1996 Comp., p. 228; E.O. 13099, 63 FR 45167, 3 CFR, 1998 Comp., p. 208; E.O. 13222, 66 FR 44025, 3 CFR, 2001 Comp., p. 783; E.O. 13224, 66 FR 49079, 3 CFR, 2001 Comp., p. 786; Notice of January 19, 2012, 77 FR 3067 (January 20, 2012); Notice of August 15, 2012, 77 FR 49699 (August 16, 2012); Notice of September 11, 2012, 77 FR 56519 (September, 12, 2012); Notice of November 1, 2012, 77 FR 66513 (November 5, 2012).

■ 2. Supplement No. 4 to part 744 is amended:

■ a. By removing under Canada, one Canadian entity: ''Atlas Electronic Systems (AES), 7320 St. Jacques St., W. Montreal, QC, H4B1W1, Canada.'';

■ b. By adding under China, in alphabetical order, two Chinese entities;

■ c. By revising under Germany, one German entity;

■ d. By adding under Germany, in alphabetical order, one German entity;

■ e. By adding under Hong Kong, in alphabetical order, four Hong Kong entities;

■ f. By adding under Ukraine, in alphabetical order, one Ukrainian entity; and

■ g. By adding under United Arab Emirates, in alphabetical order, eleven Emirati entities.

The revisions read as follows:

Supplement No. 4 to Part 744—Entity List

Country	Entity	License requirement	License review policy	Federal Register citation
*	*	*	*	*
CHINA				
*	*	*	*	*
	Jadeshine, R1102 B Tainyuangang Center, Dong San Bei Lu Bing 2, Chaoyang District, Beijing, China.	For all items subject to the EAR. (See § 744.11 of the EAR).	Presumption of denial.	78 FR [INSERT FR PAGE NUMBER] 3/28/13.
	Jadeshine Engineering HK Co., Shanghai, China; *and* Langfang, China. (See alternate address under Hong Kong).	For all items subject to the EAR. (See § 744.11 of the EAR).	Presumption of denial.	78 FR [INSERT FR PAGE NUMBER] 3/28/13.
*	*	*	*	*
GERMANY				

Country	Entity	License requirement	License review policy	Federal Register citation
*	* *	*	*	* *
	Christof Schneider, Margaretenweg #10, 42929 Wermelskirchen, Germany; *and* P.O Box 501168, D–42904, Wermelskirchen, Germany; *and* Neuenhaus 96, 42929, Wermelskirchen, Germany.	For all items subject to the EAR. (See § 744.11 of the EAR).	Presumption of denial.	74 FR 35797 7/21/09 78 FR [INSERT FR PAGE NUMBER] 3/28/13.
*	* *	*	*	* *
	Manufacturers Equipment Organization (MEO), a.k.a. the following one alias: -MEO GMBH P.O Box 501168, D–42904, Wermelskirchen, Germany; *and* Neuenhaus 96, 42929, Wermelskirchen, Germany.	For all items subject to the EAR. (See § 744.11 of the EAR).	Presumption of denial.	78 FR [INSERT FR PAGE NUMBER] 3/28/13.
*	* *	*	*	* *
HONG KONG				
*	* *	*	*	* *
	Giant Base Asia Limited Room 2205, 22/F, Kowloon Building, 555 Nathan Road, Hong Kong.	For all items subject to the EAR. (See § 744.11 of the EAR).	Presumption of denial.	78 FR [INSERT FR PAGE NUMBER] 3/28/13.
*	* *	*	*	* *
	Jadeshine Engineering (HK) Co., Room 702, Boss Commercial Centre, Ferry Street 38, Kowloon, Hong Kong.	For all items subject to the EAR. (See § 744.11 of the EAR).	Presumption of denial.	78 FR [INSERT FR PAGE NUMBER] 3/28/13.
	Jadeshine Engineering HK Co., G/F Blk C, 255 Tau Wai, DD 123 Lot, Yuen Long, Hong Kong. (See alternate address under China).	For all items subject to the EAR. (See § 744.11 of the EAR).	Presumption of denial.	78 FR [INSERT FR PAGE NUMBER] 3/28/13.
	Jason Shuai a.k.a. the following one alias: -Jason Shine Hong Kong.	For all items subject to the EAR. (See § 744.11 of the EAR).	Presumption of denial.	78 FR [INSERT FR PAGE NUMBER] 3/28/13.
*	* *	*	*	* *
UKRAINE				
*	* *	*	*	* *
	Ukrspetexport, 36 Degtiarivska Blvd., Ukraine 04119 Kyiv.	For all items subject to the EAR. (See § 744.11 of the EAR).	Presumption of denial.	78 FR [INSERT FR PAGE NUMBER] 3/28/13.
*	* *	*	*	* *
UNITED ARAB EMIRATES				
*	* *	*	*	* *
	aBensa FZ LLC, a.k.a. the following one alias: -BiotaGroup Company Al Thuraya Tower 1, 9th Floor, Office 907, P.O. Box: 500097, Dubai, U.A.E.; *and* Al Thuraya Tower 1, Media City, Dubai, U.A.E..	For all items subject to the EAR. (See § 744.11 of the EAR).	Presumption of denial.	78 FR [INSERT FR PAGE NUMBER] 3/28/13.

Country	Entity	License requirement	License review policy	Federal Register citation
*	* *	*	*	* *
	Afsari General Trading LLC, Mezzanine Fl, No. M–7, Al Bakhit Centre, Abu-Bakr Rd, Deira, Dubai, U.A.E.; *and* No. 405, Albakhit Centre, Abu-Bakr, AE-Dubai, U.A.E.; *and* P.O. Box 40150, Al Bakhit Centre, Messanine Floor, M–7, Deira, Dubai, U.A.E.	For all items subject to the EAR. (See § 744.11 of the EAR).	Presumption of denial.	78 FR [INSERT FR PAGE NUMBER] 3/28/13.
*	* *	*	*	* *
	Alex Ardalan, Al Thuraya Tower 1, 9th Floor, Office 907, P.O. Box: 500097, Dubai, U.A.E.	For all items subject to the EAR. (See § 744.11 of the EAR).	Presumption of denial.	78 FR [INSERT FR PAGE NUMBER] 3/28/13.
*	* *	*	*	* *
	David Khayam, Apt #1811 Manchester Tower, Dubai Marina, Dubai, U.A.E.; *and* PO Box 111831, Al Daghaya, Dubai, U.A.E.; *and* Dubai Shopping Center, Office 13, Dubai, U.A.E.	For all items subject to the EAR. (See § 744.11 of the EAR).	Presumption of denial.	78 FR [INSERT FR PAGE NUMBER] 3/28/13.
*	* *	*	*	* *
	Dr. Artush Parsi, No. 75 Noor Mohammed Taleb Building, Opposite to Ascot Hotel, Khaleed-bin-Valid Rd, Bur Dubai, Dubai, U.A.E.; *and* No. 7 Noor Mohammad Taleb Bldg. Opp. Ascot Hotel Khalid Bin Rd, Dubai, U.A.E.; *and* No. 705, Noor Mohammad Taleb Bldg, Bin Valid Road, Dubai, U.A.E.; *and* P.O. Box 122114, Dubai, U.A.E.; *and* P.O. 111837, Dubai, U.A.E.	For all items subject to the EAR. (See § 744.11 of the EAR).	Presumption of denial.	78 FR [INSERT FR PAGE NUMBER] 3/28/13.
*	* *	*	*	* *
	Ghasem Afsari, No. 405, Albakhit Centre, Abu-Bakr, AE-Dubai, U.A.E.; *and* P.O. Box 40150, Al Bakhit Centre, Messanine Floor, M–7, Deira, Dubai, U.A.E.; *and* Mezzanine Fl, No. M–7, Al Bakhit Centre, Abu-Bakr Rd, Deira, Dubai, U.A.E.; *and* No. 75 Noor Mohammed Taleb Building, Opposite to Ascot Hotel, Khaleed-bin-Valid Rd, Bur Dubai, Dubai, U.A.E.; *and* No. 7 Noor Mohammad Taleb Bldg. Opp. Ascot Hotel Khalid Bin Rd, Dubai, U.A.E.; *and* No. 705, Noor Mohammad Taleb Bldg, Bin Valid Road, Dubai, U.A.E.; *and* P.O. Box 122114, Dubai, U.A.E.; *and* P.O. 111837, Dubai, U.A.E.	For all items subject to the EAR. (See § 744.11 of the EAR).	Presumption of denial.	78 FR [INSERT FR PAGE NUMBER] 3/28/13.
	Hamid Rashed, Apt #1811 Manchester Tower, Dubai Marina, Dubai, U.A.E.; *and* PO Box 111831, Al Daghaya, Dubai, U.A.E.; *and* Dubai Shopping Center, Office 13, Dubai, U.A.E.	For all items subject to the EAR. (See § 744.11 of the EAR).	Presumption of denial.	78 FR [INSERT FR PAGE NUMBER] 3/28/13.

Country	Entity	License requirement	License review policy	Federal Register citation
*	* *	*	*	* *
	Liberty House Trading LLC, a.k.a. the following two aliases: -Baet Alhoreya Electronics Trading; *and* -Baet Alhoreya, Apt #1811 Manchester Tower, Dubai Marina, Dubai, U.A.E.; *and* PO Box 111831, Al Daghaya, Dubai, U.A.E.; *and* Dubai Shopping Center, Office 13, Dubai, U.A.E.	For all items subject to the EAR. (See § 744.11 of the EAR).	Presumption of denial.	78 FR [INSERT FR PAGE NUMBER] 3/28/13.
*	* *	*	*	* *
	Moh Khoman, No. 405, Albakhit Centre, Abu-Bakr, AE-Dubai, U.A.E.; *and* P.O. Box 40150, Al Bakhit Centre, Messanine Floor, M–7, Deira, Dubai, U.A.E.; *and* Mezzanine Fl, No. M–7, Al Bakhit Centre, Abu-Bakr Rd, Deira, Dubai, U.A.E.	For all items subject to the EAR. (See § 744.11 of the EAR).	Presumption of denial.	78 FR [INSERT FR PAGE NUMBER] 3/28/13.
	Mohamad Javad, No. 405, Albakhit Centre, Abu-Bakr, AE-Dubai, U.A.E.; *and* P.O. Box 40150, Al Bakhit Centre, Messanine Floor, M–7, Deira, Dubai, U.A.E.; *and* Mezzanine Fl, No. M–7, Al Bakhit Centre, Abu-Bakr Rd, Deira, Dubai, U.A.E.	For all items subject to the EAR. (See § 744.11 of the EAR).	Presumption of denial.	78 FR [INSERT FR PAGE NUMBER] 3/28/13.
*	* *	*	*	* *
	Next Gulf Trading LLC, No. 75 Noor Mohammed Taleb Building, Opposite to Ascot Hotel, Khaleed-bin-Valid Rd, Bur Dubai, Dubai, U.A.E.; *and* No. 7 Noor Mohammad Taleb Bldg. Opp. Ascot Hotel Khalid Bin Rd, Dubai, U.A.E.; *and* No. 705, Noor Mohammad Taleb Bldg, Bin Valid Road, Dubai, U.A.E.; *and* P.O. Box 122114, Dubai, U.A.E.; *and* P.O. 111837, Dubai, U.A.E.	For all items subject to the EAR. (See § 744.11 of the EAR).	Presumption of denial.	78 FR [INSERT FR PAGE NUMBER] 3/28/13.
*	* *	*	*	* *

Dated: March 21, 2013.

Kevin J. Wolf,

Assistant Secretary for Export Administration.

[FR Doc. 2013–07135 Filed 3–27–13; 8:45 am]

BILLING CODE 3510–33–P

DEPARTMENT OF COMMERCE

Bureau of Industry and Security

15 CFR Part 774

[Docket No. 121025585–3248–01]

RIN 0694–AF73

Amendment to the Export Administration Regulations: List of Items Classified Under Export Control Classification 0Y521 Series—Biosensor Systems

AGENCY: Bureau of Industry and Security, Commerce.

ACTION: Interim final rule with request for comments.

SUMMARY: In this interim final rule, the Bureau of Industry and Security (BIS) amends the Export Administration Regulations (EAR) to make certain items subject to the EAR and to impose on those items a license requirement for export and reexport to all destinations, except Canada. Specifically, this rule classifies specified biosensor systems, ''software'' and ''technology'' under Export Control Classification Numbers (ECCNs) 0A521, 0D521 and 0E521, respectively, on the Commerce Control List (CCL). As described in the final rule that established the 0Y521 series and that was published in the **Federal Register** on April 13, 2012 (77 FR 22191), items are added to the 0Y521 series upon a determination by the Department of Commerce, with the concurrence of the Departments of Defense and State, that the items should

be controlled for export because the items provide at least a significant military or intelligence advantage to the United States or foreign policy reasons justify control. The items identified in this rule are controlled for regional stability (RS) Column 1 reasons. The only license exception available for these items is for official use by personnel and agencies of the U.S. Government.

DATES: This rule is effective March 28, 2013. Comments must be received by May 28, 2013.

ADDRESSES: You may submit comments by any of the following methods:

- *Federal eRulemaking Portal: http://www.regulations.gov.* The identification number for this rulemaking is BIS–2013–0007.
- By email directly to: *publiccomments@bis.doc.gov.* Include RIN 0694–AF73 in the subject line.
- By mail or delivery to Regulatory Policy Division, Bureau of Industry and Security, U.S. Department of Commerce, Room 2099B, 14th Street and Pennsylvania Avenue NW., Washington, DC 20230. Refer to RIN 0694–AF73.

FOR FURTHER INFORMATION CONTACT: Elizabeth Sangine, Director, Chemical and Biological Controls Division, Office of Nonproliferation and Treaty Compliance by phone at (202) 482–3343 or by email at *Elizabeth.Scottsangine@bis.doc.gov*.

SUPPLEMENTARY INFORMATION:

Background

BIS established the ECCN 0Y521 series to identify items that warrant control on the CCL but are not yet identified in an existing ECCN. Items are added to the ECCN 0Y521 series by the Department of Commerce, with the concurrence of the Departments of Defense and State, upon a determination that an item should be controlled because it provides at least a significant military or intelligence advantage to the United States or because foreign policy reasons justify such control. The ECCN 0Y521 series is a temporary holding classification equivalent to United States Munitions List (USML) Category XXI (Miscellaneous Articles) in part 121 of the International Traffic in Arms Regulations, but with a limitation that while an item is temporarily classified under ECCN 0Y521, the U.S. Government works to adopt a control through the relevant multilateral regime(s), to determine an appropriate longer-term control over the item, or that the item does not warrant control on the CCL.

Items classified under ECCN 0Y521, including the items identified in this interim final rule as 0A521, 0D521 and 0E521 items, remain so-classified for one year from the date a final rule identifying the item is published in the **Federal Register** amending the EAR, unless the item is re-classified under a different ECCN, under an EAR99 designation, or the 0Y521 classification is extended. During this time, the U.S. Government determines whether it is appropriate to submit a proposed control to the applicable export control regime (e.g., the Australia Group) for potential multilateral control, with the understanding that multilateral controls are preferable when practical. An item's ECCN 0Y521 classification may be extended for two one-year periods to provide time for the U.S. Government and multilateral regime(s) to reach agreement on controls for the item, and provided that the U.S. Government has submitted a proposal to obtain multilateral controls over the item. Further extension beyond three years may occur only if the Under Secretary for Industry and Security makes a determination that such extension is in the national security or foreign policy interests of the United States. An extension or re-extension, including a determination by the Under Secretary for Industry and Security, will be published in the **Federal Register**.

License Requirements, Policies and Exceptions

The license requirements and policies for the ECCNs 0Y521 series appear in § 742.6(a)(7) of the EAR. ECCN 0Y521 items are subject to a nearly worldwide license requirement (i.e., for every country except Canada) with a case-by-case license review policy, through regional stability (RS Column 1) controls. The description and status of ECCN 0Y521 items appear in Supplement No. 5 to part 774 of the EAR, along with any item-specific license exceptions, where applicable. Unless otherwise indicated, License Exception GOV is applicable to all ECCN 0Y521 series items, including those items identified in this notice, if the item is within the scope of § 740.11(b)(2)(ii) (Items for official use by personnel and agencies of the U.S. Government), as provided in § 740.2(a)(14). License Exception GOV is the only license exception that can be used for the items identified in this interim final rule.

Addition of ECCN 0A521, 0D521 and 0E521 Items

In this rule, BIS amends the EAR to make specified biosensor systems, and related ''software,'' and ''technology'' subject to the EAR and impose license requirements on these items. These items are being added to the 0Y521 series pursuant to a determination by the Department of Commerce, with the concurrence of the Departments of State and Defense, that these items should be controlled because they provide a significant military or intelligence advantage to the United States or because foreign policy reasons justify such controls. The specified biosensor systems, ''software,'' and ''technology'' are classified under ECCNs 0A521, 0D521 and 0E521, respectively. A brief description of each of these items and ECCNs follows.

ECCN 0A521 covers biosensor systems and dedicated detecting components capable of detecting certain aerosolized bioagents and having the following characteristics: capable of showing results in three minutes or less; containing an integrated bioaerosol collector and identifier; containing antibodies to the bioagents listed in the entry; and utilizing bioluminescence as a process. This entry also includes a *Related Controls* paragraph that differentiates ECCNs 1A004.c detection systems and 2B351 toxic gas monitoring systems and their dedicated detecting components controls on the CCL from 0A521 *Biosensor Systems.* That paragraph also refers exporters to USML Category XIV(f)(2) for equipment for the detection, identification, warning or monitoring of biological agents that is subject to the licensing jurisdiction of the Department of State, Directorate of Defense Trade Controls. Finally, two Technical Notes are provided for this entry defining the term 'dedicated' and clarifying that the entry does not control biosensor systems that detect foodborne pathogens.

0D521 is *''Software''* for the function of biosensor systems controlled by ECCN 0A521.

0E521 is *''Technology''* for the ''development'' or ''production'' of biosensor systems controlled by ECCN 0A521.

The technical descriptions and the status of the specified items appear in the table found in Supplement No. 5 to part 774 of the EAR.

License Applications for the New ECCN 0A521, 0D521 and 0E521 Items

License applications for these items may be submitted through SNAP–R in accordance with § 748.6 of the EAR. Exporters are directed to include detailed descriptions and technical specifications with the license application, and identify the hardware as ECCN 0A521, the ''software'' as ECCN 0D521, and the ''technology'' as ECCN 0E521.

This rule is being issued in interim final form because while the Government believes that it is in the national security interests of the United States to immediately implement these controls, it also wants to provide the interested public with an opportunity to comment to the Government on the ultimate nature of export controls on these items.

Although the Export Administration Act expired on August 20, 2001, the President, through Executive Order 13222 of August 17, 2001, 3 CFR, 2001 Comp., p. 783 (2002), as extended by the Notice of August 15, 2012, 77 FR 49699 (August 16, 2012), has continued the Export Administration Regulations in effect under the International Emergency Economic Powers Act. BIS continues to carry out the provisions of the Export Administration Act, as appropriate and to the extent permitted by law, pursuant to Executive Order 13222.

Rulemaking Requirements

1. Executive Orders 13563 and 12866 direct agencies to assess all costs and benefits of available regulatory alternatives and, if regulation is necessary, to select regulatory approaches that maximize net benefits (including potential economic, environmental, public health and safety effects, distribute impacts, and equity). Executive Order 13563 emphasizes the importance of quantifying both costs and benefits, of reducing costs, of harmonizing rules, and of promoting flexibility. This rule has been determined to be not significant for purposes of Executive Order 12866.

2. Notwithstanding any other provision of law, no person is required to respond to, nor is subject to a penalty for failure to comply with, a collection of information, subject to the requirements of the Paperwork Reduction Act of 1995 (44 U.S.C. 3501 *et seq.*) (PRA), unless that collection of information displays a currently valid OMB control number. This rule affects two approved collections: (1) The Simplified Network Application Processing + System (control number 0694–0088), which carries a burden hour estimate of 43.8 minutes, including the time necessary to submit license applications, among other things, as well as miscellaneous and other recordkeeping activities that account for 12 minutes per submission; and (2) License Exceptions and Exclusions (0694–0137). With these initial 0Y521 series items, BIS does not believe that this rule will materially increase the number of submissions under these collections.

3. This rule does not contain policies with Federalism implications as that term is defined under E.O. 13132.

4. The provisions of the Administrative Procedure Act (5 U.S.C. 553) requiring prior notice, the opportunity for public comment and a delay in effective date are inapplicable because this regulation involves a military or foreign affairs function of the United States (*See* 5 U.S.C. 553(a)(1)). BIS, with the concurrence of the U.S. Departments of Defense and State, is implementing this rule because the items identified for the ECCN 0Y521 series in this rule provide a significant military or intelligence advantage to the United States. Immediate imposition of a license requirement is necessary to effect the national security and foreign policy goals of this rule. Immediate implementation will allow BIS to prevent exports of these items to users and for uses that pose a national security threat to the United States or its allies. If BIS delayed this rule to allow for prior notice and opportunity for public comment, the resulting delay in implementation would afford an opportunity for the export of these items to users and uses that pose such a national security threat, thereby undermining the purpose of the rule. In addition, if parties receive notice of the U.S. Government's intention to control these items under 0Y521 once a final rule was published, they might have an incentive to either accelerate orders of these items or attempt to have the items exported prior to the imposition of the control.

Further, BIS finds good cause to waive the 30-day delay in effectiveness under 5 USC 553(d)(3). Immediate implementation will allow BIS to prevent exports of these items to users and for uses that pose a national security threat to the United States or its allies. If BIS delayed this rule to allow for a 30-day delay in effectiveness, the resulting delay in implementation would afford an opportunity for the export of these items to users and uses that pose such a national security threat, thereby undermining the purpose of the rule.

Because a notice of proposed rulemaking and an opportunity for public comment are not required to be given for this rule by 5 U.S.C. 553, or by any other law, the analytical requirements of the Regulatory Flexibility Act, 5 U.S.C. 601 *et seq.,* are not applicable. Although notice and opportunity for comment are not required, BIS is issuing this rule as an interim final rule with a request for comments. All comments must be in writing and submitted via one or more of the methods listed under the **ADDRESSES** caption to this notice. All comments (including any personal identifiable information) will be available for public inspection and copying. Those wishing to comment anonymously may do so by submitting their comment via regulations.gov and leaving the fields for identifying information blank.

List of Subjects in 15 CFR Part 774

Exports, Reporting and recordkeeping requirements.

Accordingly, part 774 of the Export Administration Regulations (15 CFR parts 730–774) is amended as follows:

PART 774—[AMENDED]

■ 1. The authority citation for part 774 continues to read as follows:

Authority: 50 U.S.C. app. 2401 *et seq.;* 50 U.S.C. 1701 *et seq.;* 10 U.S.C. 7420; 10 U.S.C. 7430(e); 22 U.S.C. 287c, 22 U.S.C. 3201 *et seq.,* 22 U.S.C. 6004; 30 U.S.C. 185(s), 185(u); 42 U.S.C. 2139a; 42 U.S.C. 6212; 43 U.S.C. 1354; 15 U.S.C. 1824a; 50 U.S.C. app. 5; 22 U.S.C. 7201 *et seq.;* 22 U.S.C. 7210; E.O. 13026, 61 FR 58767, 3 CFR, 1996 Comp., p. 228; E.O. 13222, 66 FR 44025, 3 CFR, 2001 Comp., p. 783; Notice of August 15, 2012, 77 FR 49699 (August 16, 2012).

■ 2. Supplement No. 5 to Part 774 is revised to read as follows:

Supplement No. 5 to Part 774—Items Classified Under ECCNS 0A521, 0B521, 0C521, 0D521 and 0E521

The following table lists items subject to the EAR that are not listed elsewhere in the CCL, but which the Department of Commerce, with the concurrence of the Departments of Defense and State, has identified warrant control for export or reexport because the items provide at least a significant military or intelligence advantage to the United States or for foreign policy reasons.

Item descriptor *Note:* The description must match by model number or a broader descriptor that does not necessarily need to be company specific	Date of initial or subsequent BIS classification. (ID = initial date; SD = subsequent date)	Date when the item will be designated EAR99, unless reclassified in another ECCN or the 0Y521 classification is reissued	Item-specific license exception eligibility
0A521. Systems, Equipment and Components			
No.1: Biosensor systems and dedicated detecting components, i.e. cartridges and cells, capable of detecting all of the following aerosolized bioagents: anthrax, ricin, Botulinum toxin, Francisella tularensis, orthopoxvirus and Yersinia pestis, and having all of the following characteristics: a. Capable of showing results in three minutes or less; b. Has an integrated bioaerosol collector and identifier; c. Contains antibodies for any of the bioagents listed above; and d. Utilizes bioluminescence as a process. Related Controls. *(1)* See ECCN 1A004.c for detection systems and ECCN 2B351 for toxic gas monitoring systems and their dedicated detecting components, both of which are different from ECCN 0A521. Biosensor Systems. *(2)* See 22 CFR Part 121, Category XIV (f)(2) for equipment for the detection, identification, warning or monitoring of biological agents that is subject to the export licensing jurisdiction of the U.S. Department of State, Directorate of Defense Trade Controls. Technical Notes: 1. For the purposes of this entry, the term dedicated means committed entirely to a single purpose or device. 2. This entry does not control biosensor systems that detect food borne pathogens.	March 28, 2013 (ID)	March 28, 2014	License Exception GOV under §740.11(b)(2)(ii) only.
0B521. Test, Inspection and Production Equipment			
[RESERVED].			
0C521. Materials			
[RESERVED].			
0D521. Software			
No. 1 0D521 ''Software'' for the function of Biosensor Systems controlled by ECCN 0A521.	March 28, 2013 (ID)	March 28, 2014	License Exception GOV under §740.11(b)(2)(ii) only.
0E521. Technology			
No. 1: 0E521 ''Technology'' for the ''development'' or ''production'' of Biosensor Systems controlled by ECCN 0A521.	March 28, 2013 (ID)	March 28, 2014	License Exception GOV under §740.11(b)(2)(ii) only.

Dated: March 21, 2013.

Kevin J. Wolf,

Assistant Secretary for Export Administration.

[FR Doc. 2013–07132 Filed 3–27–13; 8:45 am]

BILLING CODE 3510–33–P

DEPARTMENT OF ENERGY

Federal Energy Regulatory Commission

18 CFR Part 40

[Docket No. RM12–4–000; Order No. 777]

Revisions to Reliability Standard for Transmission Vegetation Management

AGENCY: Federal Energy Regulatory Commission.

ACTION: Final rule.

SUMMARY: Under section 215 of the Federal Power Act (FPA), the Federal Energy Regulatory Commission (Commission) approves Reliability Standard FAC–003–2 (Transmission Vegetation Management), submitted to the Commission for approval by the North American Electric Reliability Corporation (NERC), the Commission-certified Electric Reliability Organization. Reliability Standard FAC–003–2 expands the applicability of the standard to include overhead transmission lines that are operated below 200 kV, if they are either an element of an Interconnection Reliability Operating Limit or an element of a Major WECC Transfer Path. Reliability Standard FAC–003–2 incorporates a new minimum annual inspection requirement, and incorporates new minimum vegetation

clearance distances into the text of the standard.

The Commission also approves the related definitions, violation severity levels, implementation plan, and effective dates proposed by NERC. The Commission approves the related violation risk factors, except that it directs a revision to the violation risk factor corresponding to one requirement.

DATES: *Effective Date:* This rule will become effective May 28, 2013.

FOR FURTHER INFORMATION CONTACT:

Tom Bradish (Technical Information), Office of Electric Reliability, Division of Reliability Standards, Federal Energy Regulatory Commission, 1800 Dual Highway, Suite 201, Hagerstown, MD 21740, Telephone: (301) 665–1391.

David O'Connor (Technical Information), Office of Electric Reliability, Division of Reliability Standards, Federal Energy Regulatory Commission, 888 First Street NE., Washington, DC 20426,Telephone: (202) 502–6695.

Jonathan First (Legal Information), Office of the General Counsel, Federal Energy Regulatory Commission, 888 First Street NE., Washington, DC 20426, Telephone: (202) 502–8529.

Julie Greenisen (Legal Information), Office of the General Counsel, Federal Energy Regulatory Commission, 888 First Street NE., Washington, DC 20426, Telephone: (202) 502–6362.

SUPPLEMENTARY INFORMATION:

Final Rule

Issued March 21, 2013

1. Pursuant to section 215 of the Federal Power Act (FPA),[1] the Commission approves Reliability Standard FAC–003–2 (Transmission Vegetation Management), submitted by the North American Electric Reliability Corporation (NERC), the Commission-certified Electric Reliability Organization (ERO). Reliability Standard FAC–003–2 modifies the currently-effective standard, FAC–003–1 (the ''Version 1'' standard). The proposed modifications, in part, respond to certain Commission directives in Order No. 693, in which the Commission approved FAC–003–1.[2]

2. Reliability Standard FAC–003–2 has a number of features that make it an improvement over the Version 1 standard. For example, like Version 1, FAC–003–2 applies to all overhead transmission lines operated at or above 200 kV, but unlike Version 1, it explicitly applies to any lower voltage overhead transmission line that is either an element of an Interconnection Reliability Operating Limit (IROL) or an element of a Major WECC Transfer Path.[3] The Reliability Standard also makes explicit a transmission owner's obligation to prevent an encroachment into the minimum vegetation clearance distance (MVCD) for a line subject to the standard, regardless of whether that encroachment results in a sustained outage or fault.[4] Also, for the first time, FAC–003–2 requires transmission owners to annually inspect all transmission lines subject to the standard and to complete 100 percent of their annual vegetation work plan. The Reliability Standard also incorporates the MVCDs into the text of the standard, and does not rely on clearance distances from an outside reference, as is the case with the Version 1 standard. We believe these beneficial provisions, and others discussed below, support our approval of FAC–003–2.

3. A recurring cause in many blackouts has been vegetation-related outages. In fact, one of the initiating causes of the 2003 Northeast blackout was inadequate vegetation management practices that led to tree contact.[5] Further, NERC has identified a focus on preventing non-random equipment outages such as those caused by vegetation as a top priority that will most likely have a positive impact on Bulk-Power System reliability.[6] We also note that industry has made important strides in reducing the instances of vegetation contact.[7] We believe that industry compliance with FAC–003–2, together with a continued focus by industry on best practices for vegetation management, will serve to enhance the reliability of the Bulk-Power System. While we approve NERC's use of the Gallet equation to determine the minimum vegetation clearance distances, we believe it is important that NERC develop empirical evidence that either confirms assumptions used in calculating the MVCD values based on the Gallet equation, or gives reason to revisit the Reliability Standard. Accordingly, consistent with the Notice of Proposed Rulemaking (NOPR) proposal, the Commission directs that NERC conduct or contract testing to obtain empirical data and submit a report to the Commission providing the results of the testing.[8]

4. We also approve the three new or revised definitions associated with the proposed Reliability Standard for inclusion in the NERC Glossary. Specifically, we approve the changes in the definition of ''Right-of-Way'' and ''Vegetation Inspection,'' as well as the addition of the term ''Minimum Vegetation Clearance Distance (MVCD)'' as defined in NERC's petition. We also approve NERC's implementation plan for FAC–003–2.

5. NERC has not adequately supported the proposed assignment of a ''medium'' Violation Risk Factor to Requirement R2, which pertains to preventing vegetation encroachments into the MVCD of transmission lines operated at 200 kV and above, but which are not part of an IROL or a Major WECC Transfer Path. As discussed later, system events have originated from non-IROL facilities. Accordingly, we adopt the NOPR proposal and direct NERC to submit a modification, within 60 days of the effective date of the Final Rule, assigning a ''high'' Violation Risk Factor for Requirement R2.

6. As discussed below, we also direct NERC to develop a means to assure that IROLs are communicated to transmission owners.

[1] 16 U.S.C. 824o (2006).

[2] *See Mandatory Reliability Standards for the Bulk-Power System,* Order No. 693, FERC Stats. & Regs. ¶ 31,242, *order on reh'g,* Order No. 693–A, 120 FERC ¶ 61,053 (2007).

[3] NERC defines ''IROL'' as ''[a] System Operating Limit that, if violated, could lead to instability, uncontrolled separation, or Cascading outages that adversely impact the reliability of the Bulk Electric System.'' NERC defines ''System Operating Limit'' as ''[t]he value (such as MW, MVar, Amperes, Frequency or Volts) that satisfies the most limiting of the prescribed operating criteria for a specified system configuration to ensure operation within acceptable reliability criteria.'' *See* NERC Glossary of Terms Used in Reliability Standards (NERC Glossary) at 26, 48. The Western Electricity Coordinating Council (WECC) maintains a listing of Major WECC Transfer Paths, *available at http://www.wecc.biz/Standards/Development/WECC-0091/SharedDocuments/WECC-0091TableMajor Paths4-28-08.doc.*

[4] *See* Reliability Standard FAC–003–2, Requirements R1 and R2, subsection 1; *see also* Petition of the North American Electric Reliability Corporation for Approval of Proposed Reliability Standard FAC–003–2—Transmission Vegetation Management at 4, 6 (NERC Petition). NERC proposes to define MVCD as ''the calculated minimum distance stated in feet (meters) to prevent flash-over between conductors and vegetation, for various altitudes and operating voltages.'' *Id.* at 2.

[5] *See* U.S.-Canada Power System Outage Task Force, Final Report on the August 14, 2003 Blackout in the United States and Canada: Causes and Recommendations at 18, 57–64 (April 2004) (2003 Blackout Report).

[6] *See* written remarks by Gerry Cauley, NERC's Chief Executive Officer, for the November 29, 2011 Reliability Technical Conference at 1, 4 and 5 (Docket No. AD12–1–000).

[7] *See, e.g.,* NERC's Third Quarter 2012 Vegetation-Related Transmission Outage Report at 6–7, *available at http://www.nerc.com/files/Item%202%20-%20Third%20Quarter%20Vegetation%20Report.pdf.*

[8] *Revisions to Reliability Standard for Transmission Vegetation Management,* Notice of Proposed Rulemaking, 141 FERC ¶ 61,046 (Oct. 18, 2012).

I. Background

A. Section 215 of the FPA

7. Section 215 of the FPA requires the Commission-certified ERO to develop mandatory and enforceable Reliability Standards, subject to Commission review and approval. Once approved, the Reliability Standards may be enforced by the ERO subject to Commission oversight, or by the Commission independently.[9] Pursuant to the requirements of FPA section 215, the Commission established a process to select and certify an ERO [10] and, subsequently, certified NERC as the ERO.[11]

B. Reliability Standard FAC–003–2 and NERC Explanation of Provisions [12]

8. Reliability Standard FAC–003–2 includes seven requirements.[13]

9. Requirements R1 and R2: Pursuant to Requirements R1 and R2, subsection 1, transmission owners must ''manage vegetation to prevent encroachments into the MVCD of its applicable line(s),'' and any encroachment is considered a violation of these requirements regardless of whether it results in a sustained outage.[14] In its petition, NERC characterized this as a ''zero tolerance'' approach to vegetation management.[15] According to NERC, these requirements represent an improvement over the Version 1 standard because FAC–003–2 makes the requirement to prevent encroachments explicit, and because it incorporates specific clearance distances into the standard itself based on ''an established method for calculating the flashover distance for various voltages, altitudes, and atmospheric conditions.'' [16]

10. In addition, FAC–003–2 includes a footnote describing certain conditions or scenarios, outside the transmission owner's control, where an encroachment would be exempt from Requirements R1 and R2, including natural disasters and certain human or animal activity.[17] In its petition, NERC explained that the footnote ''does not exempt the Transmission Owner from responsibility for encroachments caused by activities performed by their own employees or contractors, but it does exempt them from responsibility when other human activities, animal activities, or other environmental conditions outside their control lead to an encroachment that otherwise would not have occurred. '' [18]

11. Requirement R3: Requirement R3 requires a transmission owner to have ''documented maintenance strategies or procedures or processes or specifications it uses to prevent the encroachment of vegetation into the MVCD of its applicable lines.'' Requirement R3 requires that these strategies take into account movement of conductors (sag and sway), and the inter-relationship between vegetation growth rates, vegetation control methods, and inspection frequency. While NERC acknowledged that this requirement does not include the Version 1 standard's requirement to establish a Clearance 1, NERC noted that Clearance 1 levels are left largely to the discretion of the transmission owner and that the only numerical criterion for Clearance 1 is that it ''must be some undefined amount larger than the minimum flashover distance [Clearance 2].'' [19] According to NERC, the FAC–003–2 requirement to avoid encroachments after taking into account conductor movement, vegetation growth rates, etc., ''still retains the same obligations defined by 'Clearance 1.' '' [20]

12. Requirement R4: Requirement R4 requires a transmission owner that has observed a vegetation condition likely to produce a fault at any moment to notify, ''without any intentional time delay,'' the appropriate control center with switching authority for that transmission line.

13. Requirement R5: Requirement R5 requires a transmission owner constrained from performing vegetation management work needed to prevent a vegetation encroachment into the MVCD prior to implementation of the next annual work plan to take corrective action to prevent such encroachments. NERC stated in its petition that Requirement 5 improves upon the Version 1 standard provision, Requirement R1.4, which merely requires a transmission owner to develop mitigation measures to address such circumstances, but does not affirmatively require the transmission owner to take corrective action. The proposed measures for determining compliance associated with proposed Requirement R5 provide examples of the kinds of corrective actions expected, including increased monitoring, line de-ratings, and revised work orders.[21]

14. Requirement R6: Pursuant to Requirement R6, each transmission owner must inspect 100 percent of its applicable transmission lines at least once per year and with no more than 18 months between inspections on the same right-of-way. According to NERC, Requirement R6 is ''an improvement to the standard that reduces risks.'' [22] NERC noted that the Version 1 standard allows a transmission owner to develop its own schedule for inspections (with no standard minimum time) and contains no explicit requirement that the transmission owner meet its established schedule.

15. Requirement R7: Pursuant to Requirement R7, the transmission owner must complete 100 percent of its annual vegetation work plan, allowing for documented changes to the work plan as long as those modifications do not allow encroachment into the MVCD. NERC explained in its petition that Requirement R7 represents an improvement because Requirement R2 of the Version 1 standard ''does not mandate that entities plan to prevent encroachments into the MVCD, but simply that they implement whatever is included in the plan.'' [23]

C. Procedural Activities

1. Pacific Northwest National Laboratory Report

16. NERC explained in its petition that the Standard Drafting Team applied the ''Gallet equation'' to derive the MVCDs set forth in FAC–003–2. NERC described the Gallet equation as a ''well-

[9] *See* 16 U.S.C. 824o(e)(3).

[10] *Rules Concerning Certification of the Electric Reliability Organization; and Procedures for the Establishment, Approval, and Enforcement of Electric Reliability Standards,* Order No. 672, FERC Stats. & Regs. ¶ 31,204, *order on reh'g,* Order No. 672–A, FERC Stats. & Regs. ¶ 31,212 (2006).

[11] *North American Electric Reliability Corp.,* 116 FERC ¶ 61,062, *order on reh'g and compliance,* 117 FERC ¶ 61,126 (2006) (certifying NERC as the ERO responsible for the development and enforcement of mandatory Reliability Standards), *aff'd sub nom. Alcoa Inc.* v. *FERC,* 564 F.3d 1342 (D.C. Cir. 2009).

[12] Reliability Standard FAC–003–2 is not attached to the Final Rule. The complete text of Reliability Standard FAC–003–2 is available on the Commission's eLibrary document retrieval system in Docket No. RM12–4–000 and is posted on the ERO's Web site, *available at: http://www.nerc.com.*

[13] The NOPR also provided background on the requirements of the Version 1 standard, FAC–003–1, and the Commission's directives pertaining to the Version 1 standard set forth in Order No. 693. *See* NOPR, 141 FERC ¶ 61,046 at PP 8–16.

[14] *See* Reliability Standard FAC–003–2, Requirements R1 and R2, subsection 1 (transmission owners must manage vegetation to prevent, *inter alia,* ''an encroachment into the MVCD, as shown in FAC–003-Table 2, observed in Real-Time, absent a Sustained Outage'').

[15] NERC Petition at 6.

[16] *Id.* at 22.

[17] *See* proposed Reliability Standard FAC–003–2, n.2.

[18] NERC Petition at 23.

[19] *Id.* at 20. Requirement R1 of the Version 1 standard requires a transmission owner to prepare a transmission vegetation management program that includes, *inter alia,* a Clearance 1 distance to be maintained at the time of vegetation management work, and a Clearance 2 distance to be maintained at all times. *See* NOPR, 141 FERC ¶ 61,046 at P 9.

[20] NERC Petition at 20.

[21] *See id.* at 24–25.

[22] *Id.* at 17–18.

[23] *Id.* at 28. For additional background pertaining to NERC's petition, *see* NOPR, 141 FERC ¶ 61,046 at PP 32–36.

known method of computing the required strike distance for proper insulation coordination.'' [24] The Commission's Office of Electric Reliability retained the Pacific Northwest National Laboratory (PNNL) to undertake an ''analysis of the mathematics and documentation of the technical justification behind the application of the Gallet equation and the assumptions used in the technical reference paper [Exh. A of NERC's petition].'' [25]

17. PNNL's final *Report on the Applicability of the ''Gallet Equation'' to the Vegetation Clearances of NERC Reliability Standard FAC–003–2* (PNNL Report) was posted as part of the record in this docket on April 23, 2012, along with a notice inviting comment on the PNNL Report within 30 days. Nine entities submitted comments in response to the PNNL Report.[26]

2. NERC Response to Data Request

18. On May 4, 2012, Commission staff issued data requests to NERC. NERC submitted a timely response to the data requests on May 25, 2012, addressing matters such as the correct understanding and enforceability of certain provisions of the proposed Reliability Standard. Relevant elements of NERC's response to the data requests are discussed further below.

3. Notice of Proposed Rulemaking

19. On October 18, 2012, the Commission issued a NOPR proposing to approve Reliability Standard FAC–003–2. In addition to seeking comment on various aspects of NERC's petition, the Commission proposed to direct that NERC: (1) Conduct or commission testing to obtain empirical data that either confirms the MVCD values or gives reason to revisit the Reliability Standard and submit a report to the Commission providing the results of the testing; and (2) submit a modification that assigns a ''high'' Violation Risk Factor for Requirement R2.

20. Comments were due on December 24, 2012. Twenty sets of comments were received. The Appendix to the Final Rule identifies the name of commenters. The comments were informative and assisted the Commission in developing this Final Rule. On February 5, 2013, NERC submitted reply comments.

[24] NERC Petition, Ex. I (Technical Reference Document) at 39.

[25] *See* April 23, 2012 Notice Inviting Comments on Report.

[26] For further description of the PNNL Report and comments filed in response to the Report, *see* NOPR, 141 FERC ¶ 61,046 at PP 40–54.

II. Discussion

21. Pursuant to section 215(d) of the FPA, we approve Reliability Standard FAC–003–2, including the associated definitions and implementation plan, as just, reasonable, not unduly discriminatory or preferential, and in the public interest. As discussed in Section A below, we believe the proposed Reliability Standard will enhance reliability and satisfies a number of the directives from Order No. 693. We also discuss the following matters below: (A) Approval of FAC–003–2; (B) applicability of the standard to sub-200 kV transmission lines; (C) clearance distances; (D) appropriate Violation Risk Factor for Requirement R2; (E) enforcement issues; (F) inclusion of reporting obligations as a compliance measure; and (G) proposed definitions.

A. The Commission Approves Reliability Standard FAC–003–2

NOPR Proposal

22. In the NOPR, the Commission proposed to approve FAC–003–2, explaining that it improves upon the Version 1 standard by supporting vegetation management practices that can effectively protect against vegetation-related transmission outages, and by satisfying a number of the outstanding directives from Order No. 693.[27] The Commission highlighted several improvements, including the expanded applicability of the Reliability Standard so that it now applies not only to all transmission lines above 200 kV, but also to transmission lines operated below 200 kV if they are an element of an IROL or an element of a Major WECC Transfer Path. The Commission also highlighted that FAC–003–2 incorporates (1) minimum clearance distances into the text of the Reliability Standard and (2) a minimum inspection cycle requirement.

Comments

23. NERC supports the Commission's proposal to approve the proposed Reliability Standard, stating that FAC–003–2 represents a significant step in transmission vegetation management. According to NERC, FAC–003–2 maintains reliability by using a defense-in-depth strategy to manage vegetation located on transmission rights-of-way and by minimizing vegetation encroachments within the transmission owner's control, thus ''preventing the risk of those vegetation-related outages that could lead to a Sustained Outage.'' [28] Further, NERC requests that the Commission give ''due weight'' to NERC's technical expertise and approve FAC–003–2 as filed.

24. Trade Associations support approval of FAC–003–2, stating that the revised Reliability Standard responds to the Commission directives in Order No. 693 and provides a strong defense-in-depth approach to vegetation management, including a requirement for at least annual inspections.[29] Trade Associations agree with the Commission's statement in the NOPR that FAC–003–2 explicitly states minimum clearance distances and that the modified ''applicability'' provision includes additional facilities. Trade Associations state that FAC–003–2 strikes the appropriate balance between establishing minimum criteria and permitting utility-specific variations that will enhance reliability and prevent outages caused by vegetation intrusion. Likewise, AEP, BPA, Idaho Power, ITC Companies, KCPL, Manitoba Hydro, PacifiCorp, PA PUC, PG&E and Southern Companies support approval of FAC–003–2 as an improvement over the currently-effective Reliability Standard, and as addressing the Commission's directives in Order No. 693.

25. NESCOE generally supports FAC–003–2 as representing appropriate enhancements to the Version 1 standard in a number of critical areas. While noting that the Reliability Standard is not designed to address severe weather events and natural disasters such as the October 2011 Northeast snowstorm, NESCOE states that more clearly defined clearance requirements and stricter vegetation management practices should have the attendant benefit of reducing the risk to Bulk-Power System reliability during such events. However, NESCOE believes that NERC should be required to demonstrate that the proposal is supported by a cost analysis, i.e., that the incremental reliability gains outweigh the added costs. Therefore, NESCOE recommends that the Commission grant ''interim approval'' to FAC–003–2, with final approval conditioned on NERC supporting the proposal with a cost-benefit analysis.

26. APS comments that the Version 1 standard, FAC–003–1, has proven effective and the Commission should consider ''maintaining'' that standard. APS notes that the number of outages caused by vegetation grow-in has steadily declined since implementation of the Version 1 standard, and APS

[27] NOPR, 141 FERC ¶ 61,046 at PP 57–61.

[28] NERC Comments at 3.

[29] Duke, KCPL, PacifiCorp, PG&E and Southern Companies support the comments submitted by Trade Associations.

attributes this decline largely to the ''Clearance 1'' requirement that transmission owners develop and document their plan to manage the vegetation on rights-of-way at the time of work. APS expresses concern that a different approach may be less effective. Alternatively, if FAC–003–2 is approved, APS suggests integrating a Clearance 1 requirement in that standard.

Commission Determination

27. We adopt our NOPR proposal and approve Reliability Standard FAC–003–2, including the associated definitions and implementation plan, as just, reasonable, not unduly discriminatory or preferential, and in the public interest.[30] We find that FAC–003–2 is an improvement over the currently-effective Version 1 standard, will support vegetation management practices that can effectively protect against vegetation-related transmission outages, and satisfies a number of the outstanding directives from Order No. 693. As discussed earlier, NERC has explained how many of the Requirements improve upon the currently-effective Version 1 standard. In accordance with our directives in Order No. 693, and as discussed further in Section II.B below, NERC has expanded the applicability of the Reliability Standard so that it now applies not only to all transmission lines operated above 200 kV, but also to transmission lines operated below 200 kV if they are an element of an IROL or an element of a Major WECC Transfer Path.

28. In addition, NERC has incorporated minimum clearance distances into the text of the Reliability Standard, and no longer includes a required clearance distance based on a reference to distances set by Institute of Electric and Electronics Engineers (IEEE) Standard 516 that, as indicated in Order No. 693, served a different purpose than vegetation management. Proposed FAC–003–2 requires a transmission owner to prevent an encroachment into the MVCD, even if the encroachment does not result in a flashover or fault. As NERC explains, ''FAC–003–2 presents a 'zero-tolerance' approach to vegetation management, explicitly treating any encroachment into the MVCD* * * as a violation* * *.''[31] Encroachments must be prevented under all rated operating conditions, and strategies to prevent encroachments must take into account sag and sway of the line, as well as vegetative growth rates and frequency of inspection and maintenance.[32]

29. Further, in Order No. 693 the Commission expressed concern that the Version 1 standard leaves to the discretion of each transmission owner to determine inspection cycles.[33] In response, NERC has addressed this concern by incorporating a minimum inspection cycle requirement in the proposed Reliability Standard (at least once per calendar year and no more than 18 months between inspections).[34]

30. The Commission disagrees with APS and will not maintain the Version 1 standard. While we agree with APS that the Version 1 standard has proven effective in minimizing the number of outages caused by vegetation grow-in, as described above, we conclude that FAC–003–2 includes improvements upon the Version 1 standard. We expect these new features to enhance vegetation management practices and continue the decline in reported vegetation-related outages. Moreover, with regard to APS's concerns on the elimination of the ''Clearance 1'' requirement, we do not believe that this concern supports maintaining the Version 1 standard. As we discuss in more detail later on, under FAC–003–2, transmission owners will manage vegetation to distances beyond the MVCD to ensure no encroachment into the MVCD.[35] Therefore, we are not persuaded that APS's concerns warrant a remand of FAC–003–2.

31. We also disagree with NESCOE that the Commission should grant ''interim approval'' to FAC–003–2, with final approval conditioned on NERC supporting the proposal with a cost-benefit analysis. As NESCOE acknowledges, the Reliability Standard includes enhancements to the Version 1 standard in a number of critical areas. Section 215(d) of the FPA authorizes the Commission to approve or remand a Reliability Standard proposed by the ERO. There is no mention of authority to approve a standard on an ''interim'' basis, or what that approval would entail. In addition, as the Commission has stated, while the cost of implementation is appropriate for consideration among other factors in the development of a Reliability Standard, the Commission has not required the preparation of a cost-benefit analysis for approval of a standard.[36]

32. Accordingly, we approve FAC–003–2 on a final basis, and transmission owners must comply with the Reliability Standard as set forth in NERC's implementation plan.

B. Applicability—Facilities Operated Below 200 kV

NOPR Proposal

33. The Reliability Standard applies to transmission owners. Further, FAC–003–2 applies to (1) overhead transmission lines operated at 200 kV or higher and (2) overhead lines operated below 200 kV if (a) ''identified as an element of an IROL under NERC Standard FAC–014 by the Planning Coordinator'' or (b) ''identified as an element of a Major WECC Transfer Path* * *'' In the NOPR, the Commission asked how IROL status of a facility will be communicated to transmission owners, and how transmission owners can effectively implement this provision since IROL status can change with system conditions.[37] Further, the Commission asked for comment on how FAC–003–2 complies with the Order No. 693 directive that the standard cover ''lines that have an impact on reliability.''[38]

1. Identification and Communication of IROL Status

Comments

34. NERC comments that FAC–003–2 relies on the identification of IROLs by the planning coordinator, which ''would include identifying any changes in the status of a line if a line's IROL status changes given changing system conditions.''[39] NERC further states that Requirement R5 of FAC–014 provides the means for a transmission owner to obtain IROL information. According to NERC, this provision requires the planning authority (a term synonymous

[30] Likewise, we approve as requested by NERC, the retirement of FAC–003–1 and the current definitions of ''right-of-way'' and ''vegetation inspection'' effective ''midnight immediately prior to the first day of the first calendar quarter that is a year following the effective date'' of the final rule. NERC Petition at 2.

[31] NERC Petition at 6.

[32] *See* Reliability Standard FAC–003–2 at p 20–22.

[33] *See* NOPR, 141 FERC ¶ 61,046 at P 59 (citing Order No. 693, FERC Stats. & Regs. ¶ 31,242 at P 721).

[34] *See* NERC Petition at 43.

[35] *See* discussion *infra* section II.C.1 (Minimum Clearance Values); *see also* NOPR, 141 FERC ¶ 61,046 at PP 67–70 (discussing NERC Petition and maintenance of vegetation beyond MVCD values).

[36] *See* North American Electric Reliability Corp., 117 FERC ¶ 61,126 at P 97 (2006); *see also* Order No. 672, FERC Stats. & Regs. ¶ 31,204 at P 330. To the extent estimated costs are considered, estimated benefits (*e.g.,* in terms of a level of reliability or the risk, duration, scope or economic savings of avoided blackouts) must be considered, either quantitatively or (if quantification is impractical) qualitatively.

[37] NOPR, 141 FERC ¶ 61,046 at P 64.

[38] NOPR, 141 FERC ¶ 61,046 at P 65, quoting Order No. 693, FERC Stats. & Regs. ¶ 31,242 at P 708.

[39] NERC Comments at 5.

with planning coordinator) to ''provide its SOLs and IROLs to entities with a reliability-related need, such as a Transmission Owner, who request such information.'' [40] NERC further offers that ''[i]f the Commission does not agree that Transmission Owners can obtain information directly from Planning Coordinators under Requirement R5 of FAC–014,'' transmission owners have other means such as Requirement R8 of Reliability Standard TPL–001–2 as well as existing agreements between transmission owners and transmission operators.[41] Regarding changes in IROL status, NERC comments that the burden is on the transmission owner to procure this information as part of its responsibility to manage vegetation to prevent encroachment and as the entity responsible for implementing FAC–003–2.

35. Likewise, Duke states that, pursuant to FAC–014, a transmission owner can request IROL designations from the planning coordinator, including future changes to IROL status. Duke and AEP comment that FAC–003–2 includes an effective date twelve months after the date a transmission line operated below 200 kV is newly designated as an element of an IROL. They state that this twelve-month period allows time for the transmission owner to modify its vegetation management work plan to include new IROL elements.

36. According to Trade Associations, AEP and FirstEnergy, FAC–014 does not require planning coordinators to notify transmission owners of the designation of IROL facilities. Further, Trade Associations maintain that a vegetation management program is based on the near term planning horizon of one to five years and, thus, applicable entities cannot document compliance with day-to-day operating changes to IROLs. Trade Associations comment that, while this issue should not delay approval of FAC–003–2, it is important to establish a clearly defined communication structure and agreed upon start date for compliance documentation prior to transmission owners' inclusion of IROL elements in their vegetation management programs.

37. FirstEnergy and AEP advocate that the Commission direct NERC to modify FAC–014 to include a requirement that planning coordinators promptly communicate IROL status updates to transmission owners. According to Idaho Power, FAC–003–2 should require that the planning coordinator communicate IROL status to transmission owners. Moreover, Idaho Power suggests that it is reasonable to hold a transmission owner responsible for vegetation management on lines that can become IROLs during ''studied credible contingencies'' but not for unstudied or unanticipated system conditions.

38. BPA suggests that NERC develop an automated electronic notification system to inform affected transmission owners regarding changes in IROL status.

Commission Determination

39. Consistent with the NOPR, we remain concerned regarding how IROL status of a facility will be communicated to transmission owners. We are not persuaded that Reliability Standard FAC–014 requires the communication of IROL status information to transmission owners. Requirement R5 of FAC–014–2 provides:

> R5. The Reliability Coordinator, Planning Authority and Transmission Planner shall each provide its SOLs and IROLs to those entities that have a reliability-related need for those limits and provide a written request that includes a schedule for delivery of those limits as follows:
>
> R5.1. The Reliability Coordinator shall provide its SOLs (including the subset of SOLs that are IROLs) to adjacent Reliability Coordinators and Reliability Coordinators who indicate a reliability-related need for those limits, and to the Transmission Operators, Transmission Planners, Transmission Service Providers and Planning Authorities within its Reliability Coordinator Area. * * *

40. While Requirement R5 indicates that SOLs and IROLs should be provided to entities that have a ''reliability-related need'' for that information, this broad language is limited ''as follows'' to the entities specified in sub-Requirement R5.1. Transmission owners are not specified. Further, Requirement R5 of FAC–003 does not include ''for example'' or ''including but not limited to'' language that would suggest the entities specified in sub-Requirement R5.1 are not exclusive. Thus, we conclude that FAC–014–2 does not obligate reliability coordinators, planning authorities and transmission planners to provide IROL information to transmission owners.[42]

41. Rather, we agree with Trade Associations and other commenters that NERC should establish a clearly defined communication structure to assure that IROLs and changes to IROL status are timely communicated to transmission owners. This structure will better support compliance with the extended applicability of FAC–003–2 to sub-200 kV transmission lines that are an element of an IROL. One way to achieve this objective, as advocated by AEP and others, is to modify FAC–014 to require the provision of IROLs to transmission owners. However, we leave it to NERC to determine the most appropriate means for communicating IROL status to transmission owners.

42. We do not believe, however, that establishing a communication structure should delay the implementation of FAC–003–2. As NERC indicates, the ultimate responsibility for compliance with FAC–003–2 is upon transmission owners. Moreover, it appears that there are multiple avenues for transmission owners to obtain information about IROL elements on their facilities. For example, NERC represents that, in many instances, the entity responsible for identifying IROL elements on a system is also registered as a transmission owner.[43] Likewise, transmission owners may obtain the necessary information through voluntary communications or pursuant to coordination required in bilateral agreements. As Duke and AEP note, FAC–003–2 includes an effective date that is twelve months after the date a line operated below 200 kV is initially designated as an element of an IROL, which allows time for the transmission owner to modify its vegetation management work plan to include new IROL elements. We encourage NERC to inform us when it has developed means for communication of IROLs to transmission owners to help ensure they receive notice of each of their applicable lines before the standard becomes effective as to those lines.

43. With regard to the concern in the NOPR on the changing status of IROLs, we accept the explanation of Trade Associations that a vegetation management program should be based on the near term planning horizon of one to five years, in which case applicable transmission owners will not be responsible to document compliance with day-to-day operating changes to IROLs. Likewise, we agree with Idaho Power that transmission owners should be responsible for vegetation management on lines that can become IROLs during ''studied credible contingencies.'' Based on the methodology set forth in FAC–014, sub-200 kV transmission lines that are identified as elements of an IROL or Major WECC Transfer Path are subject to FAC–003–2. For example, some entities

[40] *Id. See also* Technical Reference Document at p. 12.

[41] NERC Comments at 5–6.

[42] NERC also suggests that Requirement R8 of TPL–001–2 supports the communication of IROLs by transmission operators to transmission owners. Proposed Reliability Standard TPL–001–2 has not been approved as a mandatory Reliability Standard.

[43] *See* NERC Comments at 5–6.

identify seasonal IROLs and we expect sub-200 kV elements of seasonal IROLs to be subject to FAC–003–2.[44] In contrast, as suggested by Idaho Power, if, for example, a multiple contingency results in the operation of the system in an unknown state for a limited period of time, a transmission owner is not responsible for compliance with FAC–003–2 with respect to IROLs that may result from temporary operation in that unknown state. We believe that this approach provides consistency and predictability in identifying the sub-200 kV transmission lines that are subject to compliance with FAC–003–2.

44. Finally, with regard to BPA's suggestion, we will not direct that NERC develop an automated electronic notification system to inform affected transmission owners of changes in IROL status. BPA may propose this directly to NERC, and NERC can determine whether this is an appropriate activity.

2. Coverage of Lines That Have an Impact on Reliability

Comments

45. NERC maintains that, consistent with Order No. 693, it has properly modified the applicability of FAC–003–2 to include transmission lines that have an impact on reliability while balancing the extension of the applicability of the standard against unreasonably increasing the burden on transmission owners.[45] According to NERC, rather than employing a bright-line threshold of 100 kV, the standard drafting team chose to limit sub-200 kV applicability to ''specific cases where lines are critical to reliability by virtue of their inclusion as elements in the determination of an IROL or a part of a Major WECC Transfer Path.'' [46] NERC states that, by relying on IROL and Major WECC Transfer Path identification as a ''proxy'' for reliability importance, FAC–003–2 uses an ''impact-based approach'' for determining applicability. Similarly, Duke asserts that FAC–003–2 appropriately covers lines that have an impact on reliability by including sub-200 kV lines that are either an element of an IROL or a major WECC Transfer Path.

46. PacifiCorp and NESCOE comment that FAC–003–2 appropriately balances the inclusion of certain sub 200-kV lines based on IROLs with the risk of over-capturing elements that do not present a risk of cascading outages. NESCOE states that this balance ''takes into account the burden placed on transmission owners and, implicitly costs ultimately borne by consumers.'' [47]

47. In response to the NOPR question regarding how NERC will assure that IROLs are properly designated in light of the 2011 Southwest Outage, NERC states that it will continue to enforce FAC–014 and FAC–010 to ensure that planning coordinators identify IROLs using their developed methodology. NERC also states that efforts are underway to implement recommendations of the Outage Report addressing the failure to properly designate IROLs.

Commission Determination

48. The Commission accepts NERC's explanation that it has properly modified the applicability of FAC–003–2 to include transmission lines that have an impact on reliability. We agree with NERC that, by making the applicability of sub-200 kV transmission lines dependent on operating impacts, *i.e.,* elements of IROLs and Major WECC Transfer Paths, the Reliability Standard reasonably balances enhanced applicability of the standard with unreasonably increasing the burden on transmission owners without commensurate reliability gains.

49. With regard to the Commission's question in the NOPR regarding how NERC will assure that IROLs are properly designated in light of the 2011 Southwest Outage,[48] we are satisfied with NERC's explanation that (a) NERC will continue to enforce FAC–014 and FAC–010 to ensure that planning coordinators identify IROLs using their developed methodology and (b) efforts are underway to implement recommendations of the Outage Report addressing the failure to properly designate IROLs.

C. Requirements R1 and R2

1. Minimum Clearance Values

NOPR Proposal

50. In the NOPR, the Commission stated that ''[b]ased on the record in this proceeding, the application of the Gallet equation appears to be one reasonable method to calculate MVCD values.'' [49] The Commission further stated that NERC ''has supported the inputs and assumptions it used to develop those minimum clearance distances, at least until such time that empirical data is developed and is available for use in setting MVCDs.'' [50] The Commission, however, explained that it remained concerned over the lack of empirical data with regard to actual flashover distances observed through testing or analysis of flashover events.[51]

51. NERC, in its petition, indicated that Electric Power Research Institute (EPRI) is planning to undertake field tests of energized high voltage conductor flash-over to vegetation, and the NOPR asked for information on the status of the testing. In the NOPR, the Commission proposed to direct that NERC conduct or commission testing to obtain empirical data and submit a report to the Commission providing the results of the testing.

Comments

52. EPRI, in its comments, provides an update on the status of its testing. EPRI states that, beginning in June 2009, it planted vegetation on a test right-of-way at EPRI's facilities, intended for high voltage air gap spark-over research. EPRI explains that it can raise and lower the test line, and adjust the test line voltage, to create the desired spark-over scenario. According to EPRI, with appropriate funding and designation of scope, testing can begin in the summer of 2013. EPRI recommends that a study designed to improve understanding of gap flash over to trees should focus primarily on validation of the Gallet equation, and specifically the flashover characteristics of a conductor to a grounded rod. EPRI states that it is committed to working with the Commission and other entities to develop an appropriate project scope, to estimate the required funding and solicit that funding.

53. NERC asks that, due to uncertainty in timing, funding, design, scope and execution of a study to develop empirical data, the Commission refrain from issuing a directive that NERC conduct or commission testing. NERC suggests that, as an alternative, the Commission ''accept NERC's commitment'' to work with the Commission and other entities to determine ''whether and how a study could be conducted to obtain the empirical data the Commission seeks * * *'' [52] According to NERC, this alternative approach would allow NERC

[44] Most likely, transmission owners do not manage vegetation under or near a line seasonally as it moves in/out of IROL status, and instead do so on a year-round basis. In other words, as a practical matter, a seasonal IROL is maintained throughout the year.

[45] NERC Comments at 8. NERC notes that the Commission in Order No. 693 directed NERC to ''modify the Reliability Standard to apply to Bulk-Power System transmission lines that have an impact on reliability as determined by the ERO.'' *Id.*

[46] *Id.* at 8–9.

[47] NESCOE Comments at 6.

[48] NOPR, 141 FERC ¶ 61,046 at P 65.

[49] NOPR, 141 FERC ¶ 61,046 at P 71.

[50] NOPR, 141 FERC ¶ 61,046 at P 66.

[51] NOPR, 141 FERC ¶ 61,046 at P 72 (citing Order No. 693, FERC Stats. & Regs. ¶ 31,242 at P 735).

[52] NERC Comments at 10.

flexibility to discuss study scope and funding with the Commission, allow for the development of partnerships in conducting the study, and allow collaboration on the study and any necessary changes to the Reliability Standard. NERC asks that, if directed to conduct empirical research, the Final Rule address (1) the need for the empirical data and scope of the study, (2) time frame for the study—and allow NERC to submit a proposed schedule for completion, and (3) funding of the study.

54. Trade Associations support EPRI conducting research ''to the extent needed,'' and submitting a preliminary report with initial observations by first quarter 2014. Trade Associations state that EPRI has the skills and equipment necessary to conduct testing, but add that funding ''may be a challenge'' since EPRI does not have a dedicated funding source. Trade Associations comment that there needs to be a clearer understanding of the scope and timeline for the research, and urge limiting the scope and subsequent report to validating the ''gap factors'' used to represent the ''air gap'' between a conductor and vegetation. Trade Associations, as well as Duke, advocate that the study not focus on validating the appropriateness of the Gallet equation for use in determining MVCDs, as that testing and validation has already taken place. Trade Associations add that, as an alternative to a Commission directive, the Commission could consider informal discussions with NERC and stakeholders to inform decisions on the scope and timing of the research, and how to most effectively ensure strong project management and funding.

55. AEP, BPA, Duke, Idaho Power and PacifiCorp also support the proposal to direct testing of the MVCDs calculated by the Gallet equations, and support EPRI conducting such field testing or research. Idaho Power recommends directing that NERC submit a report within one year of a final rule approving FAC–003–2. AEP, however, believes that it would be premature to impose a schedule for the testing until funding is procured.

56. On a related matter, regarding compliance with MVCD values in Requirements R1 and R2, PacifiCorp and APS comment that the only way to prove that the MVCD has not been violated under all rated conditions and all sag/sway scenarios is to employ Light Detection and Ranging (LiDAR) on a continuous basis. PacifiCorp recommends that, because this approach is cost prohibitive, FAC–003–2 should be revised in a subsequent version to return to the language of the Version 1 standard that allows transmission owners to remedy Clearance 2 encroachments prior to an outage without a violation. APS requests clarification regarding the need to demonstrate compliance at all rated conditions so that transmission owners can design their vegetation management plans appropriately and reduce the risk of violation.

57. APS comments that, while the Gallet equation appears to be a reasonable method to calculate MVCD values, it shares the Commission's concern regarding the lack of empirical data on actual flashover distances and supports the proposed directive for field tests of energized high voltage conductor flashover to vegetation. APS suggests that the United States Department of Energy (DOE) conduct the study, with a completion date of first quarter 2014.

58. Moreover, APS expresses concern that FAC–003–2 does not carry over the Clearance 1 requirement set forth in the current Version 1 standard. According to APS, the requirement to maintain Clearance 1 is a primary cause of the success of the Version 1 standard in reducing vegetation-related outages. APS also states that Clearance 1 clarifies that federal, state, and other agencies do not have the authority or responsibility to determine clearances on rights-of-way. According to APS, Clearance 1 ''gives legitimacy'' to transmission owners in discussions with federal agencies for clearance distances that are greater than the minimum required, i.e., Clearance 2 distances. APS, therefore, advocates that the Commission either maintain the Version 1 standard or ''integrate'' a Clearance 1 requirement into FAC–003–2.

Commission Determination

59. We adopt the NOPR proposal and direct NERC to conduct or contract testing to develop empirical data regarding the flashover distances between conductors and vegetation. The data obtained from such studies should be informative of the appropriateness and accuracy of the MVCD values for various voltage ratings as set forth in FAC–003–2. While NERC can develop the specific parameters for such testing, generally, repeated application of high voltage injections into a test line under set conditions would provide evidence of sparkover events. A statistical analysis would then evaluate the test results and provide empirical evidence to support an appropriate gap factor to be applied in calculating minimum clearance distances using the Gallet equation.[53]

60. In response to Trade Associations, we are not directing NERC to reconsider use of the Gallet equation in determining MVCD values as set forth in the Reliability Standard. As we stated in the NOPR, and adopt in the Final Rule, the application of the Gallet equation appears to be one reasonable method to calculate MVCD values.[54] However, MVCD calculations based on the Gallet equation depend on certain assumptions, such as the appropriate ''gap factor.'' NERC previously indicated that it relied on a ''widely known and regarded source for determining the appropriate gap factor.'' [55] It nonetheless is clear that the gap factor NERC applied in the Gallet equation to calculate MVCD values was not based on empirical data. If such inputs into the calculation prove to be inaccurate, in a worst case scenario, flashovers from vegetation to a conductor could occur at the MVCD values identified in the Reliability Standard. While NERC's use of the Gallet equation and the resulting MVCD values are reasonable based on the information available in this docket, minimum clearance values are too important to reliability to ultimately rely on assumed inputs, and empirical testing is appropriate to confirm the values used in the equation.

61. NERC asks that we accept its commitment to move forward with the study. However, our determination that such a study is needed warrants imposing a directive for its completion. Thus, we direct NERC, within 45 days of the effective date of this Final Rule, to submit an informational filing that includes, *inter alia:* (1) A schedule for testing, (2) scope of work, (3) funding solutions, and (4) deadline for submitting a final report to the Commission on the test results (and interim reports if a multi-year study is conducted). This approach should give NERC the flexibility to consult with the Commission or its staff as well as industry members to determine the technical specifications for the required study, funding sources and timing. However, given the importance of the testing set forth in our determination, the filing and schedule must include a reasonable date for the submission of a final report on the results of the empirical study.

62. With regard to the comments of PacifiCorp and APS on compliance with

[53] We will not specify that NERC retain EPRI or any other particular entity to conduct the required testing.

[54] NOPR, 141 FERC ¶ 61,046 at P 71.

[55] *See* NOPR, 141 FERC ¶ 61,046 at P 47.

the MVCD values under all rated conditions, we disagree that FAC–003–2 should be revised to allow transmission owners to remedy MVCD encroachments prior to an outage without a violation. NERC indicates that, under FAC–003–2, transmission operators will manage vegetation to distances beyond the MVCD to ensure no encroachment into the MVCD.[56] Thus, in response to PacifiCorp and APS, a vegetation management strategy required by Requirement R3 of FAC–003–2 must provide enough clearance to ensure that the MVCD will not be encroached under any conditions.

63. We are not persuaded by APS's concern that the Commission should carry over the Clearance 1 requirement to FAC–003–2. In the NOPR, the Commission provided a detailed explanation, based on the NERC petition, regarding how transmission owners are expected to comply with the clearance requirements set forth in Requirements R1 and R2 of FAC–03–2. The MVCD clearances represent only one aspect of FAC–003–2. The MVCD establishes a ''*minimum*[] required to prevent Flash-over.'' [57] Reliability Standard FAC–003–2 requires transmission owners to manage vegetation to ensure that vegetation does not encroach into the MVCD, which in turn requires transmission owners to manage vegetation to a distance further than the MVCD. For example, transmission owners are required to have documented compliance strategies, procedures, processes, or specifications under Requirement R3 to prevent encroachments into the MVCDs after taking into account sag and sway of the lines, as well as vegetative growth rates, planned control methods and frequency of inspections.[58] Similarly, under Requirement R7, a transmission owner is required to ''complete 100% of its annual vegetation work plan of applicable lines to ensure no vegetation encroachments occur within the MVCD.'' [59] As NERC has explained, the ''Transmission Owner is obligated to show detailed documentation that clearly explains their system with regard to the geography and how the Transmission Owner will execute the plan to prevent encroachment.'' [60] Further, according to the NERC petition, a transmission owner's documentation approach will generally contain certain specific elements including ''the maintenance strategy used (such as minimum vegetation-to-conductor distance or maximum vegetation height) to ensure that MVCD clearances are never violated.'' [61] Likewise, NERC indicated that ''prudent vegetation maintenance practices dictate that substantially greater distances [than the applicable MVCD] will be achieved at time of vegetation maintenance.'' [62]

64. NERC also explained that a conductor's position in space at any point in time continuously changes in reaction to a variety of factors, such as the amount of thermal and physical loading, air temperature, wind velocity and direction, and precipitation. The following diagram is a cross-section view of a single conductor at a given point along the span that illustrates six possible conductor positions due to movement resulting from thermal and mechanical loading: [63]

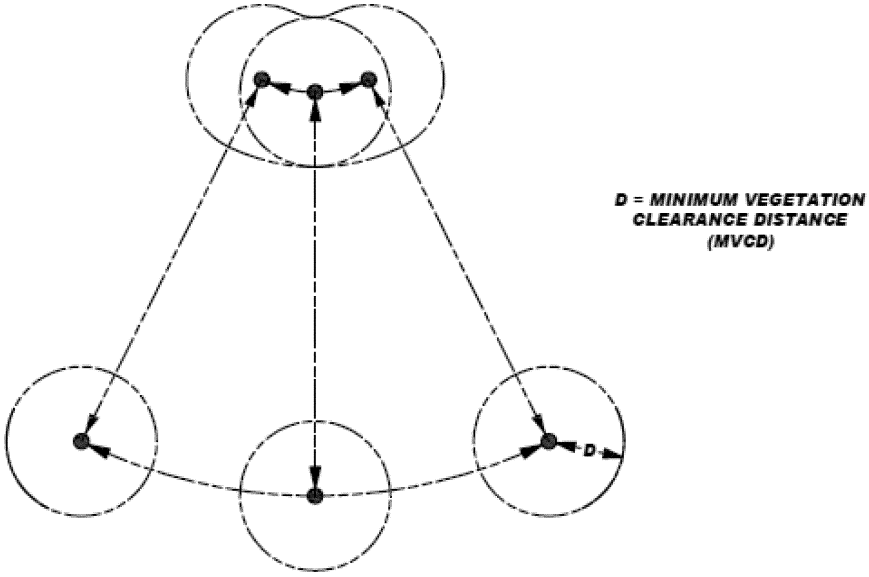

NERC indicated that conductor movements must be taken into account under FAC–003–2, and that the transmission owner is required to show that its approach to vegetation management under Requirement R3 will prevent encroachments under all expected line positions.[64] Thus, a transmission owner must manage vegetation to ensure it does not encroach into the MVCD under multiple conditions.

65. Finally, as NERC explained in its Technical Reference Document, transmission owners will have to clear vegetation to levels ''well away from'' the minimum spark-over zone:

> As the conductor moves through various positions [due to thermal loading and physical loading], a spark-over zone surrounding the conductor moves with it.

[56] *See* NOPR, 141 FERC ¶ 61,046 at PP 67–70 (discussing NERC Petition and maintenance of vegetation beyond MVCD values).

[57] NERC Petition, Ex. A (Proposed Reliability Standard FAC–003–2) at 26 (Table 2—Minimum Vegetation Clearance Distances (MVCD) for Alternating Current Voltages), n. 7 (emphasis added).

[58] NOPR, 141 FERC ¶ 61,046 at P 67.

[59] Reliability Standard FAC–003–2, Requirement R7.

[60] *See* NERC Response to Data Request Q2.

[61] NOPR, 141 FERC ¶ 61,046 at P 67.

[62] *Id.* (citing NERC Petition, Ex. A (Proposed Reliability Standard FAC–003–2) at 26 (Table 2—Minimum Vegetation Clearance Distances (MVCD) for Alternating Current Voltages), n. 7).

[63] NERC Petition, Ex. A at 20–21.

[64] *See id.* and Requirement R3 of FAC–003–2; *see also* NERC Petition, Ex. I (Technical Reference Document) at 20–29.

* * * At the time of making a field observation, however, it is very difficult to precisely know where the conductor is in relation to its wide range of all possible positions. Therefore, Transmission Owners must adopt maintenance approaches that account for this dynamic situation.

* * * * *

In order to maintain adequate separation between vegetation and transmission line conductors, the Transmission Owner must craft a maintenance strategy that keeps vegetation well away from the spark-over zone mentioned above.[65]

66. Thus, while clearances required at the time of maintenance may vary from one region or area to another, our proposed approval of FAC–003–2 is based on our understanding, which is drawn directly from NERC's statements in its petition, that transmission operators will manage vegetation to distances beyond the MVCD to ensure no encroachment into the MVCD.

67. NERC's approach to setting MVCDs and maintaining vegetation is reasonable and designed to provide flexibility while assuring that transmission owners will proactively avoid encroachments into the MVCD. Accordingly, we will not require the reinstatement of a Clearance 1 requirement in FAC–003–2 as requested by APS.

2. Violation Risk Factor for Requirement R2

NOPR Proposal

68. The NOPR explained that NERC proposes to assign a ''high'' Violation Risk Factor to Requirement R1, which requires transmission owners to ''manage vegetation to prevent encroachments into the MVCD of its applicable line(s) which are either an element of an IROL, or an element of a Major WECC Transfer Path.'' Requirement R2, which is assigned a ''medium'' Violation Risk Factor, provides that ''[e]ach Transmission Owner shall manage vegetation to prevent encroachments into the MVCD of its applicable line(s) which are *not* either an element of an IROL, or an element of a Major WECC Transfer Path.''[66] The Commission observed that the substantive obligations set forth in Requirements R1 and R2 are identical, but the Violation Risk Factors differ based on whether a transmission line is an element of an IROL or Major WECC Transfer Path.

69. The Commission, in the NOPR, questioned whether this proposed ''bifurcation'' comported with the definition of ''medium'' Violation Risk Factor and the Commission's guidelines for reviewing Violation Risk Factor designations. The Commission also noted that transmission lines not designated as elements of IROLs played a role in past cascading outages. For these reasons, the Commission proposed to modify the Violation Risk Factor for Requirement R2 from ''medium'' to ''high,'' and invited NERC to ''provide additional explanation * * * to demonstrate the lines identified in Requirement R2 are properly assigned a medium Violation Risk Factor.''[67]

Comments

70. NERC comments that it ''does not have additional information beyond the information supplied in its petition'' on this issue.[68] NERC maintains that the ''medium'' designation is appropriate, aligns with the definitions for Violation Risk Factors and complies with the Commission's guidelines for such designations. According to NERC, the separate designations for Requirements R1 and R2 recognize that an element of an IROL or WECC Major Transfer Path is a ''greater risk'' to the transmission system, while applicable lines that are not an element of an IROL or Major WECC Transfer Path ''do require effective vegetation management, but these lines are comparatively less operationally significant.''[69]

71. Trade Associations ''do not disagree'' with the NOPR statement that lines not designated as IROL or Major WECC Transfer Path may be associated with higher-risk consequences including cascading outages. Trade Associations, however, maintain that the test for a medium Violation Risk Factor ''is not whether a violation could lead to system instability, but whether it is likely (or unlikely) to occur.''[70] Thus, Trade Associations argue that the ''medium'' designation for Requirement R2 is appropriate because lines that are not an element of an IROL or Major WECC Transfer Path present a ''comparatively reduced risk'' for cascading outages or system instability. Trade Associations note that the Violation Risk Factor distinction between Requirements R1 and R2 received broad industry support and that the Commission's proposal would reverse NERC and industry's consensus approach to the development of FAC–003–2.

72. Duke and Manitoba Hydro also oppose the designation of a ''high'' Violation Risk Factor for Requirement R2. Duke notes that the definition of IROL is ''a System Operating Limit that, if violated, could lead to instability, uncontrolled separation, or Cascading Outages * * *'' and, thus, argues that a non-IROL line does not present as great a risk for cascading outages or instability and should have a lesser Violation Risk Factor.

Commission Determination

73. We adopt our NOPR proposal and direct NERC to modify the Violation Risk Factor for Requirement R2 from ''medium'' to ''high,'' within 45 days of the effective date of the Final Rule.

74. The Commission-approved definition of a ''medium'' risk requirement is:

A requirement that, if violated, could directly affect the electrical state or the capability of the bulk electric system, or the ability to effectively monitor and control the bulk electric system. However, violation of a medium risk requirement is *unlikely to lead to bulk electric system instability, separation, or cascading failures* * * *.[71]

The definition of a high Violation Risk Factor is:

A requirement that, if violated, *could directly cause or contribute to* bulk electric system instability, separation, or a cascading sequence of failures, or could place the bulk electric system at an unacceptable risk of instability, separation, or cascading failures * * *.[72]

75. We are not persuaded by the response of NERC and others that a medium Violation Risk Factor designation for Requirement R2 is supported because there is a relatively greater risk of cascading outages associated with a transmission line that is an element of an IROL or Major WECC Transfer Path than with a line that is not. The definition of ''medium'' Violation Risk Factor provides in part that ''violation of a medium risk requirement is unlikely to lead to bulk electric system instability, separation, or cascading failures.'' In the NOPR, the Commission questioned NERC's rationale, stating that ''NERC does not explain *why* outages on these relatively high voltage lines (200 kV or higher) would not likely lead to cascading, separation, or instability * * *''[73] Further, the Commission pointed out that transmission lines not designated as an IROL element (or the equivalent) have been instrumental in causing major blackouts, including the August 2003

[65] NERC Petition, Ex. I (Technical Reference Document) at 21–24.

[66] Reliability Standard FAC–003–2, Requirement R2 (emphasis in original).

[67] NOPR, 141 FERC ¶ 61,046 at P 81.

[68] NERC Comments at 13.

[69] NERC Comments at 13.

[70] Trade Association Comments at 5.

[71] *See North American Electric Reliability Corp.,* 119 FERC ¶ 61,145 at P 9, *order on compliance,* 121 FERC ¶ 61,179, at n.2, App. A (2007) (emphasis added).

[72] *Id.* (emphasis added).

[73] NOPR, 141 FERC ¶ 61,046 at P 77.

Northeast blackout and an August 10, 1996 blackout in the Western Interconnection.[74] Rather than responding to the Commission's request for an explanation of why outages on high voltage, non-IROL lines are unlikely to lead to instability, separation or cascading, NERC and others simply reiterate their previous rationale. Thus, we conclude that NERC and other commenters have not adequately supported a ''medium'' Violation Risk Factor designation for Requirement R2.

76. As noted above, a high Violation Risk Factor is defined, in part, as a ''requirement that, if violated, could directly cause or contribute to bulk electric system instability, separation, or a cascading sequence of failures, or could place the bulk electric system at an unacceptable risk of instability, separation, or cascading failures * * *'' As we explained in the NOPR, transmission lines that are not an element of an IROL or Major WECC Transfer Path have contributed to major cascading outages.[75] This fact supports a ''high'' Violation Risk Factor designation for Requirement R2. Moreover, our Violation Risk Factor guidelines, which require, among other things, consistency within a Reliability Standard (guideline 2) and consistency between requirements that have similar reliability objectives (guideline 3), also support modifying the Violation Risk Factor assigned to Requirement R2 from medium to high.[76]

77. Accordingly, we direct NERC to modify the Violation Risk Factor for Requirement R2 from ''medium'' to ''high,'' within 45 days of the effective date of the Final Rule.

3. *Requirements R1 and R2, Footnote 2—Conditions Outside the Transmission Owner's Control*

78. Reliability Standard FAC–003–2 includes a footnote describing certain conditions or scenarios, outside the transmission owner's control, in which an encroachment would be exempt from Requirements R1 and R2, including natural disasters and certain human or animal activity.[77] In its Petition, NERC explained, the footnote ''does not exempt the Transmission Owner from responsibility for encroachments caused by activities performed by their own employees or contractors, but it does exempt them from responsibility when other human activities, animal activities, or other environmental conditions outside their control lead to an encroachment that otherwise would not have occurred.'' [78]

Comments

79. Southern Companies and PG&E disagree with the explanation of footnote 2 in NERC's petition. According to Southern Companies, NERC's ''interpretation'' is contrary to the plain language of the footnote, which unambiguously states that Requirement R1 ''does not apply to circumstances that are beyond the control of the Transmission Owner'' including ''human activity'' such as installation, removal, or digging of vegetation. Southern Companies asserts that the standard drafting team intended footnote 2, in part, to maintain the exemption from responsibility for contractor-caused violations provided under the Version 1 standard. Southern Companies argue that NERC's understanding could discourage transmission owners from having contractors remove danger trees from outside of the right-of-way that could make contact with a conductor since the transmission owner would be responsible for inadvertent contact during such removal. PG&E makes similar arguments and adds that, while recognizing that it has a responsibility to ensure that its employees and contractors are properly trained and follow appropriate safety practices, a utility cannot craft a vegetation management program that will prevent unintended and unpredictable encroachment associated with possible human activity or error. Thus, Southern Companies and PG&E urge the Commission to reject NERC's explanation of footnote 2.

80. BPA comments that it ''understand and accepts'' that transmission owners will be held liable for the actions of its employees and contractors, but believes there should be exceptions to this liability in some circumstances. According to BPA, if for example employees or contractors are negligent while felling a tree, the utility should be held accountable. However, BPA maintains that ''an exemption should be granted'' if a transmission owner can demonstrate that it utilized appropriate best management vegetation strategies and practices, but an unpredictable event occurs, such as an equipment failure, rope breakage or a hidden tree defect, and results in an encroachment that violates Requirement R1 or R2. BPA notes that placing liability on the transmission owner will have potentially significant cost impacts. For example, BPA asserts that vegetation contractors will have to increase the amounts on their liability insurance and performance bonds, and pass those costs on to transmission owners.

81. In reply to Southern Companies and PG&E, NERC states that it consulted with the standard drafting team in preparing the petition and confirmed that the intent of footnote 2 was not to exclude the activity of the employee or contractor. According to NERC, interpreting the footnote as suggested by Southern Companies and PG&E would insulate all errors in executing vegetation management plans and ''effectively encourage mismanagement.'' Rather, according to NERC, specific instances of error by employees or contractors in executing a vegetation management plan may be addressed on a case-by-case analysis, including the scenarios described by BPA.

Commission Determination

82. The language in footnote 2 of FAC–003–2 provides:

> This requirement does not apply to circumstances that are beyond the control of a Transmission Owner subject to this reliability standard, including natural disasters such as earthquakes, fires, tornados, hurricanes, landslides, wind shear, fresh gale, major storms as defined either by the Transmission Owner or an applicable regulatory body, ice storms, and floods; human or animal activity such as logging, animal severing tree, vehicle contact with tree, or installation, removal, or digging of vegetation. Nothing in this footnote should be construed to limit the Transmission Owner's right to exercise its full legal rights on the ROW.

83. The stated intent of the footnote is to not hold transmission owners responsible for vegetation encroachments into the MVCD resulting from circumstances beyond the control of the transmission owner. The footnote then provides numerous examples of circumstances beyond a transmission owner's control, including ''human or animal activity such as logging * * * or installation, removal, or digging of vegetation.'' As stated above, NERC explained that footnote 2 ''does not exempt the Transmission Owner from responsibility for encroachments caused by activities performed by their own employees or contractors, but it does exempt them from responsibility when other human activities, animal activities, or other environmental conditions outside their control lead to

[74] *Id.* at PP 78–79.

[75] NOPR, 141 FERC ¶ 61,046 at P 78–79.

[76] *See North American Electric Reliability Corp.*, 119 FERC ¶ 61,145 at P 16.

[77] *See* Reliability Standard FAC–003–2, n.2.

[78] NERC Petition at 23.

an encroachment that otherwise would not have occurred.'' [79]

84. We do not read NERC's statement as inconsistent with the language of the footnote, as suggested by Southern Companies. Footnote 2 does not remove from the responsibility of the transmission owner all activity of its employees or contractors under all circumstances. We do not read NERC's statement as ascribing transmission owner responsibility under Requirements R1 and R2 to all activity of its employees or contractors. Rather, should an encroachment occur as a result of activity by a transmission owner's employee or contractor, a case-by-case analysis is necessary to determine responsibility. This understanding is consistent with BPA's comments, which recognize that transmission owners may be held liable for the actions of an employee or contractor, while also acknowledging that unpredictable events may occur that are reasonably outside the control of the transmission owner. We believe that this is an appropriate approach that is consistent with the text of footnote 2 of FAC–003–2 as well as NERC's explanation of this provision.

4. Elimination of Training Requirement

85. Requirement R1.3 of the Version 1 standard provides that ''[a]ll personnel directly involved in the design and implementation of the TVMP shall hold appropriate qualifications and training, as defined by the Transmission Owner, to perform their duties * * *'' Reliability Standard FAC–003–2 does not include a training requirement. According to NERC, the provision of the Version 1 standard is ''effectively meaningless,'' since ''appropriate'' qualifications and training are undefined and left entirely to the discretion of the transmission owner.[80]

Comments

86. PA PUC disagrees with the elimination of the training provision and recommends that the Commission require NERC to develop a standard that specifies the minimum necessary qualifications and training for personnel involved in the design and implementation of vegetation management programs. Washington DNR also urges the Commission to not approve the elimination of Requirement R1.3 and, rather, define appropriate qualifications for personnel performing vegetation management.

Commission Determination

87. We are not persuaded by the commenters to direct NERC to include a training or qualifications provision in FAC–003–2. NERC explained in its petition that the qualifications provision of the Version 1 standard, Requirement R1.3, is ''effectively meaningless,'' since ''appropriate'' qualifications and training are undefined and left entirely to the discretion of the transmission owner.[81] The use of the term ''appropriate'' in current Requirement R1.3 does not render this requirement unenforceable. However, if interested entities wish to pursue development of a future training requirement further with NERC, they can develop a Standards Authorization Request (SAR) and submit it to NERC for consideration.

D. Requirements R1 and R2

1. Consolidation of Reference Material

NOPR Proposal

88. The Commission, in the NOPR, noted that NERC provided information from several sources that are useful to an overall understanding of the intent of FAC–003–2 and how it will be enforced, including information from NERC's petition, NERC's Guideline and Technical Basis document, and NERC's May 25, 2012 response to Commission staff data requests. The NOPR requested comment on whether NERC should consolidate the reference material so that entities that must comply can find these materials in one place.[82]

Comments

89. NERC comments that it does not object to consolidating the reference material and posting it on the NERC Web site along with FAC–003–2 prior to implementation. BPA and ITC Companies agree that the reference material should be consolidated in one place. Trade Associations comment that the guidance material can have value to inform a company in developing management plans and activities, but cautions that such guidance must not alter the requirements of a Reliability Standard or be used as a compliance measurement.

Commission Determination

90. NERC and other commenters support the NOPR proposal to consolidate reference material pertaining to FAC–003–2 to support implementation of the Reliability Standard. We agree with NERC and other commenters and adopt our NOPR proposal. Accordingly, within 45 days of the effective date of the Final Rule, NERC must consolidate the reference material and post it on the NERC Web site along with Reliability Standard FAC–003–2.

2. Requirement R4—Notification of a Vegetation Condition Likely To Cause an Imminent Fault

NOPR Proposal

91. Requirement R4 of FAC–003–2 requires transmission owners to notify ''without intentional time delay'' the control center with switching authority for the applicable line when the transmission owner has confirmed the existence of a vegetation condition that is likely to cause an imminent fault. In the NOPR, the Commission asked for comment on how NERC ''would or should treat a delay in communication caused by the negligence of the transmission owner or one of its employees, where the delay may be significant and 'unintentional.' '' [83]

Comments

92. NERC responds that the specific facts and circumstances underlying a delay in communication must be determined on a case-by-case basis. However, according to NERC, the expectation in Requirement R4 is that once the transmission owner has confirmed the existence of a vegetation condition that is likely to cause an imminent fault, the transmission owner must immediately notify the control center. NERC explains that the standard drafting team did not include a ''quantitative'' time element for notification in Requirement R4 due to the difficulty in determining one time period that applies to all situations.

93. Trade Associations, Duke and Southern Companies comment that the inquiry into whether a transmission owner's notification occurred ''without any intentional time delay'' is a fact specific determination. Southern Companies adds that the drafting team considered a specific time window for notifying the control center but adopted the current language because it (i) avoids an arbitrarily narrow time-frame and (ii) provides a clear metric. PacifiCorp comments that, because the severity of an event will ''vary across facts and circumstances,'' it recommends the ''development of a load factor above which the failure to promptly report a vegetation condition * * * would warrant a high severity level and below which would warrant a lesser severity level.'' [84] Idaho Power comments that the cause of the delay

[79] NERC Petition at 23.

[80] NOPR, 141 FERC ¶ 61,046 at P 33 (citing NERC Petition at 31–32).

[81] NERC Petition at 23–24.

[82] NOPR, 141 FERC ¶ 61,046 at P 91.

[83] NOPR, 141 FERC ¶ 61,046 at P 92.

[84] PacifiCorp Comments at 5.

must be assessed and degrees of failure could be addressed in Violation Severity Levels or, if delays result from administrative process issues, addressed in the ''find, fix and track'' process.

Commission Determination

94. We agree with the explanation of NERC and Trade Associations that the specific facts and circumstances underlying a delay in communication must be determined on a case-by-case basis. We also agree with, and adopt, NERC's explanation that, pursuant to Requirement R4, once the transmission owner has confirmed the existence of a vegetation condition that is likely to cause an imminent fault, the transmission owner must immediately notify the control center.

95. We reject PacifiCorp's suggestion that severity levels for non-compliance with Requirement R4 be tied to a load factor. This appears to be an overly-complex approach to address a failure to promptly communicate a vegetation condition that is likely to cause an imminent fault.

3. Reporting Requirements

NOPR Proposal

96. The Version 1 Standard, FAC–003–1, Requirements R3 and R4, require quarterly reporting to the Regional Entities of sustained transmission outages caused by vegetation. In the NOPR, the Commission explained that, while FAC–003–2 moves the reporting requirements to the ''Additional Compliance Information'' section as a Periodic Data Submittal, NERC maintains that the reporting requirements remain enforceable under NERC's Rules of Procedure. In its Petition, NERC stated that it and Regional Entities can require entities to provide ''such information as is necessary to monitor compliance with the reliability standards'' under Section 401.3 of NERC's Rules of Procedure.[85] NERC asserted that ''it has certain courses of action it may undertake as necessary to ensure the entity complies with the Rule, pursuant to NERC Rule of Procedure Section 100, including notifying the Commission of the entity's failure to comply.[86] While agreeing that, pursuant to Section 401.3, NERC and the Regional Entities can require transmission owners to submit quarterly reports of sustained transmission outages, the Commission asked for comment regarding the ''courses of action'' that are available to NERC to ensure compliance.

Comments

97. NERC responds that, as an example of a course of action, the NERC Rules of Procedure provide possible consequences for an entity's failure to timely provide requested data—including application of a ''severe'' Violation Severity Level for a Reliability Standard Violation.[87] Idaho Power suggests that other courses of action could include Regional Entity audits, spot checks and investigations of vegetation-caused outages.

98. Santa Clara asserts that non-compliance with the quarterly reporting requirement is analogous to non-compliance with a NERC request for data that is necessary to meet NERC's section 215 obligations, pursuant to Section 1600 of NERC's Rules of Procedure. Santa Clara thus maintains that NERC's only recourse, pursuant to Section 1603 of NERC's Rules, is to refer such non-compliance to the Commission for enforcement. According to Santa Clara, the Rules provisions cited in NERC's Petition and the NOPR are not applicable because they pertain specifically to NERC's compliance/enforcement program.

99. In a reply comment, NERC reiterates its authority under Section 400 of the NERC Rules of Procedure, claiming that the quarterly reporting obligation is ''squarely'' part of NERC's compliance, monitoring and enforcement functions.

Commission Determination

100. We accept NERC's explanation that it has ''tools'' to address non-compliance with the reporting requirements set forth in the ''Additional Compliance Information'' section of Reliability Standard FAC–003–2. As NERC indicates, in connection with a substantive violation of Requirements R1 or R2 of FAC–003–2 due to an encroachment that causes a sustained outage, NERC or a Regional Entity can attach a higher Violation Severity Level to that violation based on the failure to identify the encroachment in a required periodic report. Likewise, pursuant to the NERC Rules, the Regional Entity can devote more compliance resources to oversight of an entity that fails to comply with a reporting requirement.[88]

101. We are not persuaded by Santa Clara's claims that NERC's ''tools'' do not apply because they pertain specifically to NERC's compliance/enforcement program. Rather, it is reasonable to view a transmission owner's failure to provide quarterly data as set forth in the Additional Compliance Information provision of FAC–003–2 as fitting within NERC's compliance, monitoring and enforcement function. The reporting of sustained outages caused by vegetation encroachment pertains to substantive compliance with the requirements of FAC–003–2 and will provide information that is necessary to monitor compliance with FAC–003–2 to the extent that transmission owners do not otherwise self-report possible violations. Thus, we find that the reporting of quarterly data set forth in the Additional Compliance Information provision falls within Section 401.3 of NERC's Rules of Procedure. Moreover, NERC's ''tool'' of assigning a higher violation severity level for a related violation of FAC–003–2 will occur in a compliance posture. The other ''tool'' identified by NERC, more stringent oversight of an entity that fails to comply with a reporting requirement, is simply a matter of Regional Entity discretion regarding how it chooses to apply compliance resources.

102. Ultimately, if these tools prove ineffective in gaining the cooperation of a transmission owner in timely reporting of sustained outages as set forth in FAC–003–2, NERC's Rules of Procedure provide for NERC seeking enforcement action by the Commission for a violation of NERC's Rules of Procedure. Such a violation would also violate section 39.2 of the Commission's regulations.[89]

E. Definition of Right-of-Way

103. NERC modified the definition of ''Right-of-Way'' as follows:

The corridor of land under a transmission line(s) needed to operate the line(s). The width of the corridor is established by engineering or construction standards as documented in either construction documents, pre-2007 vegetation maintenance

[85] NOPR, 141 FERC ¶ 61,046 at P 93. Section 401.3 of NERC's Rules of Procedure provides, ''all Bulk Power System owners, operators and users shall provide to NERC and the applicable Regional Entity such information as is necessary to monitor compliance with the Reliability Standards.''

[86] Id. (citing NERC Petition at 31–32. Section 100 of NERC's Rules of Procedure provides, ''[e]ach Bulk Power System owner, operator, and user shall comply with all Rules of Procedure of NERC that are made applicable to such entities* * *. If NERC determines that a Rule of Procedure has been violated, or cannot practically be complied with, NERC shall notify [the Commission] and take such other actions as NERC deems appropriate to address the situation.'')

[87] NERC Comments at 16 (citing NERC Rules of Procedure, App. 4C (Compliance Monitoring and Enforcement Program), at Att. 1).

[88] *See North American Electric Reliability Corp.*, 141 FERC ¶ 61,241, at PP 78–83 (2012) (approving NERC's revised Rules of Procedure, including Section 3.0 and CMEP Attachment 1 that specifies possible actions in response to an entity that fails to provide timely responses to an ERO or Regional Entity data request).

[89] 18 CFR 39.2 (2012).

records, or by the blowout standard in effect when the line was built. The ROW width in no case exceeds the Transmission Owner's legal rights but may be less based on the aforementioned criteria.

104. While the Commission in the NOPR proposed to approve the right-of-way definition, it also sought comment on certain aspects of the definition. Below, we discuss the following matters related to the right-of-way definition: (1) Guidance for defining an appropriate right-of-way; (2) NERC's approach to fall-ins by ''danger trees''; and (3) vegetation management strategies.

1. Guidance for Defining an Appropriate Right-of-Way

NOPR

105. In the NOPR, the Commission observed that, because fall-ins, blow-ins and grow-ins that cause a sustained outage violate FAC–003–2 only if they occur from inside the right-of-way, transmission owners have an incentive to define right-of-way as narrowly as possible to limit penalty exposure.[90] Related, the Commission noted that the right-of-way definition includes guidance as to how the transmission owner may define its right-of-way, requiring that it be based on construction documents, pre-2007 vegetation maintenance records, or as-built blowout standards. The Commission asked for comment on how the guidance in the definition will be used by (1) transmission owners to establish criteria to determine an appropriate right-of-way and (2) auditors to establish criteria to determine compliance with the Reliability Standard.[91]

Comments

106. NERC points out that ''an encroachment due to vegetation *growth* into the MVCD that caused a vegetation-related Sustained Outage'' would violate Requirements R1 and R2, ''regardless of the defined right-of-way.'' [92] NERC also comments that, given the significant cost and public scrutiny of a sustained outage, transmission owners have an incentive to set right-of-way widths properly to ensure that the land needed to operate a transmission line is included.

107. Further, NERC clarifies that the right-of-way definition requires that the width of a corridor ''be established *by engineering or construction standards* as documented in either construction documents, pre-2007 vegetation maintenance records, or by the blowout standard in effect when the line was built.'' [93] NERC thus explains that the three types of information identified in the right-of-way definition are the criteria for a transmission owner to set the width of the right-of-way using sound engineering or construction standards. NERC states that ''in all cases'' the width of the right-of-way must meet engineering or construction standards and cannot be arbitrarily set by the transmission owner. According to NERC, auditors will be able to request supporting information used to set the width of the right-of-way, including any of the available information listed in the right-of-way definition.

108. Duke comments that the Commission's concern is unfounded because transmission owners are not free to arbitrarily define a particular right-of-way but, rather, are bounded by the specific parameters stated in NERC's definition.

109. Trade Associations state that, in many instances, transmission owners may not have construction documents, pre-2007 vegetation maintenance records, or as-built blowout standards since many transmission lines were constructed decades ago and the guidance material is no longer available. Trade Associations ask the Commission to clarify that, when guidance materials are unavailable, a transmission owner may work with NERC and its Regional Entity on a case-by-case basis to develop right-of-way widths applying, for example, recognized industry procedures. AEP comments that it supports the right-of-way definition with the understanding that, for some lines, the right-of-way may be constrained by the original design or existing legal rights. ITC also supports clarification where the materials stated in the right-of-way definition are not available, and proposes specific language to insert within the definition that would require the transmission owner to develop a written procedure to determine and document the corridor width based on current industry accepted methods.

110. In its reply comments, NERC opposes ITC's proposal for specific changes to the right-of-way definition, contending that the definition includes the necessary latitude for a transmission owner to determine a right-of-way based on the options provided in the definition.

Commission Determination

111. We agree with NERC that an encroachment due to vegetation growth into the MVCD that results in a sustained outage would violate Requirements R1 and R2 regardless of the defined right-of-way. This responsibility is stated explicitly and without qualification regarding tree location: ''[e]ach Transmission Owner shall manage vegetation to prevent encroachments into the MVCD of its applicable line(s) * * * of the types shown below * * * (4) An encroachment due to vegetation growth into the MVCD that caused a vegetation-related Sustained Outage.'' [94] Further, we agree with NERC and others that the criteria set forth in the right-of-way definition provide a reasonable, objective means of determining an appropriate right-of-way width.

112. With regard to the concern of Trade Associations and others where none of the records mentioned in the right-of-way definition are available for a specific applicable transmission line, an alternative approach to setting right-of-way width is necessary. We agree with NERC that ''in all cases'' the width of the right-of-way must meet engineering or construction standards and cannot be arbitrarily set by the transmission owner. As suggested by Trade Associations, one reasonable way to achieve this is for the transmission owner to work with NERC and the relevant Regional Entity on a case-by-case basis to develop right-of-way widths applying recognized industry procedures. Further, NERC may determine—after some experience with setting right-of-way widths—that this is an appropriate topic for an industry advisory or operating committee guideline. We will not, however, require that NERC revise the Reliability Standard to address this issue, as suggested by ITC.

2. NERC Approach to Fall-Ins by ''Danger Trees''

NOPR

113. In the NOPR, the Commission agreed with NERC that fall-ins of green or healthy trees outside the corridor-based right-of-way, but within the right-of-way controlled by the transmission owner, would not violate FAC–003–2. The Commission, however, questioned NERC's approach to a fall-in by ''danger timber'' in that same range. NERC explained that, ''if the TO is regularly identifying its danger trees and has a program for managing the risk of fall-in

[90] NOPR, 141 FERC ¶ 61,046 at P 97.

[91] NOPR, 141 FERC ¶ 61,046 at P 102.

[92] NERC Comments at 16–17 (emphasis in original) (citing Reliability Standard FAC–003–2, Requirements R1(4) and R2(4)).

[93] NERC Comments at 20. *See also* BPA Comments at 5.

[94] Reliability Standard FAC–003–2, Requirement R1, subsection (4).

there would be no violation.'' [95] The Commission expressed concern that this statement ''could be read to mean that, as long as the transmission owner identifies danger trees and has a program to manage the risk of those trees, an encroachment into the MVCD from a location within the transmission owner's control would not be a violation.'') [96] The Commission disagreed with such an approach because the mere existence of a program to identify danger trees and a program to manage risk should not shield a transmission owner from enforcement.

Comments

114. In response to the Commission's concerns, NERC clarifies that its earlier statement that ''if the TO is regularly identifying its danger trees and has a program for managing the risk of fall-in there would be no violation'' is accurate so long as the transmission owner implements a well-managed and executed vegetation management program as documented under Requirement R3 and as carried out through the risk-based Requirements R6 and R7. According to NERC, the reference to ''no violation'' pertained to Requirements R6 and R7, but was not intended to convey that mere existence of a program to identify danger trees and a program to manage risk would create a shield from a finding of a violation under Requirements R1 or R2 if an encroachment occurs.

115. APS, BPA, PA PUC and VELCO support NERC's approach. They agree that the ''mere existence'' of a danger tree program is insufficient, and transmission owners should have a ''demonstrably active and robust'' danger tree management program. BPA adds that a transmission owner that has reasonably implemented a program to manage fall-in risks should be exempt from violation since ''accidents do occur'' even when due care is exercised. PA PUC comments that, while NERC's data request response is helpful, it should be incorporated into the BES definition or the Reliability Standard to prevent confusion in the future.

116. Trade Associations articulate their understanding that, in the event of encroachment into the MVCD by a danger tree located outside the right-of-way but within the control of the transmission owner, the transmission owner would not be found in violation of Requirement R6 when it implemented a program that regularly identifies danger trees and manages the risk of fall-in encompassing areas within the transmission owner's control. Further, Trade Associations comment that, while it is common practice to include identification and mitigation of danger trees in transmission owner vegetation management plans, in many cases the identification of diseased or dying trees is not a matter involving simple observation.[97] Thus, Trade Associations as well as Duke caution against basing enforcement decisions on ''post hoc'' analyses of whether a transmission owner correctly identified a dead or diseased tree. They assert that, if the Commission places transmission owners at risk of violation based on such after-the-fact assessment, transmission owners may likely engage in more clear-cutting to avoid the risk. VELCO also indicates that a strict stance on off-corridor danger tree management could lead to more clear-cutting and adds that a better outcome motivates transmission owners to actively identify and, exercising professional judgment, remove danger trees on a case-by-case basis.

117. PacifiCorp maintains that the Commission's concern appears to be unfounded based on the explicit language of Requirements R1 and R2 that require transmission owners to manage vegetation to prevent all encroachments into the MVCD of an applicable line, and then identifies specific circumstances. According to PacifiCorp, the NERC drafting team was concerned that many transmission owners have rights-of-way far wider than necessary to responsibly maintain the integrity of their applicable transmission lines. PacifiCorp asserts that it would be unreasonable to hold utilities to the same level of compliance for all activities within the legal right-of-way for areas beyond those currently necessary.

Commission Determination

118. Fall-ins of danger trees into the MVCD from outside the right-of-way but within the control of the transmission owner are not addressed by Requirements R1 and R2. However, such fall-ins do have compliance implications with regard to Requirements R6 and R7 of FAC–003–2. Requirement R6 requires each transmission owner to perform a ''Vegetation Inspection of 100% of its applicable transmission lines * * * at least once per calendar year * * *'' NERC defines the term ''Vegetation Inspection'' as ''[t]he systematic examination of vegetation conditions on a Right-of-Way *and those vegetation conditions under the Transmission Owner's control that are likely to pose a hazard to the line(s)* prior to the next planned maintenance or inspection * * *'' [98] The definition explicitly provides that the Vegetation Inspection include the examination of vegetation conditions not only in the defined right-of-way but of ''vegetation conditions under the Transmission Owner's control that are likely to pose a hazard to the line(s) * * *'' Likewise, Requirement R7 provides that ''[e]ach transmission owner shall complete 100% of its annual vegetation work plan of applicable lines to ensure no vegetation encroachments occur within the MVCD,'' without mention of or limitation to the defined right-of-way.[99]

119. Thus, the fall-in of danger tree from outside the defined right-of-way but within a transmission owner's control would likely merit examination to determine whether the transmission owner is properly conducting the annual Vegetation Inspection as required by Requirement R6 and performing the annual work plan as required by Requirement R7. In this context, we find the explanation of NERC and other commenters informative that it is not sufficient for a transmission owner simply to demonstrate that it identifies danger trees and has a program for managing the risk of fall-in. Rather, a transmission owner must have a well-managed, danger tree management program as carried out through Requirements R6 and R7.[100]

120. As indicated by NERC, the ''documented maintenance strategies'' required by Requirement R3 should demonstrate whether a transmission owner adequately inspects vegetation and completes its annual work plan. Likewise, the Measures set forth in FAC–003–2 provide the basis for determining a transmission owner's compliance with the corresponding Requirements R6 and R7. We agree with Trade Associations and Duke that a potential violation of Requirements R6 and R7 should not be based on ''post

[95] NOPR, 141 FERC ¶ 61,046 at P 101 (citing NERC Data Responses, Responses to Q9 (May 25, 2012)).

[96] NOPR, 141 FERC ¶ 61,046 at P 101.

[97] Trade Associations note that ANSI A–300 defines ''danger tree'' as ''a tree on or off the right-of-way that could contact electric supply lines''; and defines ''hazard tree'' as ''a structurally unsound tree that could strike a target when it fails.''

[98] NERC Petition at 2 (emphasis added).

[99] Reliability Standard FAC–003–2, Requirement R7. The Guideline and Technical Basis contained in FAC–003–2 also indicates that the annual work plan is not limited to the right-of-way: ''[i]n general, the vegetation management maintenance approach should use the full extent of the Transmission Owner's easement, fee simple and other legal rights allowed.'' *Id.* at 24.

[100] NERC Comments at 19–20.

hoc'' analyses of whether a transmission owner correctly identified a dead or diseased tree. A fall-in from outside of the defined right-of-way may give reason to review a transmission owner's compliance with the annual inspection and work plan requirements. In the context of fall-ins from outside the defined right-of-way, enforcement decisions should be based on a review of the quality of the transmission owner's program and its execution of that program.

3. Vegetation Management Strategies

NOPR

121. In the NOPR, the Commission noted that FAC–003–2 does not require clear-cutting along the right-of-way but, instead, gives the transmission owner flexibility to adopt an appropriate vegetation management strategy to comply with the Reliability Standard. The NOPR also noted that NERC's Technical Reference Document provides that different vegetation management strategies may be appropriate for different areas, and FAC–003–2 gives transmission owners the option to adopt strategies to comply with FAC–003–2 that encourage active vegetation management and Integrated Vegetation Management rather than clear-cutting.[101] Further, NERC's Technical Reference Document describes American National Institute of Standards (ANSI) A–300—Best Management Practices for Tree Care Operations and identifies Integrated Vegetation Management as a best management practice, including incorporation of wire-border zone management techniques and the establishment and maintenance of compatible vegetation.

Comments

122. Trade Associations state that, since approval of FAC–003–1, transmission owners have ''aggressively pursued compliance under a 'zero defects' mandate for transmission tree-related outages'' and, as a result, only a small number of violations have affected reliable operation of the Bulk-Power System.[102] According to Trade Associations, transmission owners' vegetation management practices are designed to prevent vegetation-related outages by creating and sustaining a stable and compatible ''vegetated community'' within a transmission corridor using ''integrated vegetation management'' techniques. They further explain that vegetation that has the ''genetic disposition'' to grow to heights that may interfere with transmission should be removed. Trade Associations contend that continuous trimming will not guarantee that an encroachment will not occur, and it is a ''gamble'' not to use best management practices and remove the vegetation that will interfere with transmission. They add that transmission owners do have successful vegetation management programs that also help property owners maintain and even enhance the environmental benefits of the right-of-way while ensuring sufficient clearance between the vegetation and energized conductors. Trade Associations and ITC add that transmission owners have outreach programs and maintain information on company Web sites on vegetation management practice, and encourage the Commission to further this public education process. PacifiCorp suggests that the Commission appears to apply a ''double standard'' by supporting a zero tolerance approach to compliance with FAC–003 while also opposing tree removal.

123. PG&E and APS support the Commission's recognition of the importance of using best utility vegetation management practices, the use of Integrated Vegetation Management and the ''wire-border zone'' technique contained in ANSI A–300. PG&E states that an approach using these concepts will accomplish the objective of developing and maintaining a sustainable, low-growing compatible plant community in the right-of-way, while reducing the risk of vegetation-related outages. APS states that ANSI A–300 recognizes the need to remove vegetation that can cause power outages within the right-of-way and to convert the right-of-way to more compatible plant species.

124. APS comments that ANSI A–300 recognizes the need to communicate with all stakeholders involved in the vegetation maintenance process. APS acknowledges that the Commission ''is in a difficult position'' on ensuring reliability and considering public expectations for vegetation management.[103] APS recognizes that, in the past, transmission owners have used the Commission's regulations as an ''excuse'' for clearing trees. According to APS, while properly implementing best management practices may require clearing that could displease property owners, vegetation management programs should engage and work cooperatively with land owners.

125. Trade Associations also raise concerns regarding right-of-way access issues, particularly involving federal lands. According to Trade Associations, for some transmission owners, access to federal lands is a ''significant variable'' in setting facilities ratings, configuring transmission for reliability and vegetation management. Trade Associations assert that, particularly in Western states, transmission owners have experienced significant difficulties with federal agency field personnel for obtaining timely permission to access land and scheduling facilities inspections and maintenance activities, including vegetation management. Trade Associations thus urge the Commission to take a leadership role in initiating and coordinating discussions with other federal agencies, and with stakeholder groups, to find practical remedies to right-of-way access issues.

Commission Determination

126. As indicated by NERC, Requirement R3 documented maintenance strategies can take many forms.[104] While accommodating flexibility, these documented strategies must have sufficient specification to provide a means to follow the transmission owner's strategy through a paper trail or guidelines. Documented strategies cannot be so vague as to fail to provide any clear guidance for auditors and others to understand the basis for the transmission owner's vegetation management program.

127. With regard to comments on the implementation of vegetation management strategies, we agree that ANSI–A 300 is a commonly recognized source for best vegetation management practices. We disagree with PacifiCorp, however, that we are seeking to apply a ''double standard'' by supporting a zero tolerance approach to compliance with FAC–003 while also opposing tree removal. We understand that, as explained by Trade Associations and other commenters, best practices call for the removal of tall-growing vegetation from the right-of-way and replacement with a sustainable plant community. In many circumstances, this is a reasonable approach. However, we also believe that a transmission owner should not monolithically equate vegetation management with tree removal. Circumstances may provide greater latitude, for example, when addressing the concerns of an individual landowner and where the species of vegetation are not genetically disposed

[101] NOPR, 141 FERC ¶ 61,046 at P 100 (citing NERC Petition, Ex. I (Technical Reference Document) at 24–29).

[102] Trade Association Comments at 13. *See also* ITC Comments at 6–7.

[103] APS Comments at 8.

[104] NERC Petition at 17, 20, 35.

to encroach into the MVCD. Certainly, as recognized by APS, a transmission owner decision's to remove vegetation in such circumstances should not be ascribed to the Commission.

128. Ultimately, transmission owners should work with private land owners to determine an appropriate approach that assures reliability and respects private land owner concerns. As noted by commenters, this approach requires clear communications between transmission owners and private landowners; and meaningful outreach should indicate how a transmission owner plans to execute vegetation management along the right-of-way.

129. Trade Associations raise concerns regarding transmission owners' right-of-way access issues on public lands. We note that in Order No. 693, the Commission directed NERC ''to collect outage data for transmission outages of lines that cross both federal and non-federal lands, analyze it, and use the results of this analysis and information to develop a Reliability Standard that would apply to transmission lines crossing both federal and non-federal land.'' [105] NERC has not provided this analysis, nor does the development record provided with NERC's petition indicate that the standard drafting team utilized such analysis or data in developing FAC–003–2. In these circumstances, given the lack of objective data, it is difficult for the Commission to gauge the nature or seriousness of this issue.

130. NERC should gather and analyze the necessary data regarding vegetation management issues on public lands. If NERC's analysis indicates that there are issues that should be addressed, NERC should propose a means to address the concern, for example by issuing an alert, or propose other appropriate action.

III. Information Collection Statement

131. The Office of Management and Budget (OMB) regulations require that OMB approve certain reporting and recordkeeping (collections of information) imposed by an agency.[106] Upon approval of a collection(s) of information, OMB will assign an OMB control number and expiration date. Respondents subject to the filing requirements of this rule will not be penalized for failing to respond to these collections of information unless the collections of information display a valid OMB control number.

132. The Commission is submitting these reporting and recordkeeping requirements to OMB for its review and approval under section 3507(d) of the Paperwork Reduction Act of 1995. The Commission solicited comments on the need for and the purpose of the information contained in Reliability Standard FAC–003–2 and the corresponding burden to implement the Reliability Standard. The Commission received one comment on the reporting burden estimates. Idaho Power states that it does not anticipate adding new transmission lines to its vegetation management plan and, therefore, Idaho Power does not project a significant increase in outage reporting.

133. The Final Rule approves Reliability Standard FAC–003–2, which includes certain requirements to create and maintain records related to a transmission owner's vegetation management strategies, vegetation management work plan and its performance of inspections. Because transmission owners have vegetation management plans they follow per the existing transmission vegetation management standard (FAC–003–1), and must compile and maintain similar records and provide similar reports under the existing standard, the revisions are expected to have a minor impact on the burden of record-keeping and reporting. In addition, by allowing greater flexibility compared to the currently-effective Version 1 standard with regard to the materials that must be maintained for a vegetation management plan or strategy, FAC–003–2 may reduce the reporting burden for some entities.

134. *Public Reporting Burden:* Our estimate below regarding the number of respondents is based on the NERC compliance registry as of July 24, 2012. According to the compliance registry, NERC has registered 330 transmission owners within the United States. Transmission owners must report and retain certain data pursuant to the currently effective Version 1 standard. Thus, the burden estimate below is based on the potential change in the reporting burden imposed by FAC–003–2. Requirement R3 of FAC–003–2 provides more flexibility than FAC–003–1 for transmission owners in preparing and maintaining a vegetation management program, and the incremental change in the burden may be negligible or even decrease for some portion of transmission owners. The individual burden estimates are based on each transmission owner having to perform a one-time review of the revised Reliability Standard's information collection requirements and to make any required modifications to its existing vegetation management plans and documentation procedures. In addition, the burden estimate takes into account an on-going, albeit very minor increase in the quarterly reporting burden, based on the increased burden to confirm whether or not reportable outages have occurred on lines not previously subject to FAC–003–1's requirements. Idaho Power's comment affirms that the increase in quarterly reporting burden should be insignificant. Further, the burden estimate takes into account the increased recordkeeping burden associated with the Reliability Standard's annual vegetation inspection requirements, which is estimated to increase the inspection cycles (and the associated documentation to demonstrate compliance) for about one third of transmission owners (110 transmission owners).

FAC–003–2 (transmission vegetation management)	Number of transmission owner respondents (1)	Number of responses per respondent (2)	Average burden hours per response (3)	Total annual burden hours (1) × (2) × (3)
One time review and modifications to existing documentation, plans and procedures	330	1	16	5,280 (one-time)
Quarterly Reporting	[107] 115	4	0.5	230
Annual Vegetation Inspections Documentation	110	1	2	220

[105] Order No. 693, FERC Stats. & Regs. ¶ 31,242 at P 732.

[106] 5 CFR 1320.11.

FAC–003–2 (transmission vegetation management)	Number of transmission owner respondents (1)	Number of responses per respondent (2)	Average burden hours per response (3)	Total annual burden hours (1) × (2) × (3)
Total				5,730

[107] While approval of FAC–003–2 is not expected to increase the number of reports made or the number of reportable outages experienced, some utilities may experience a slight increase in the amount of time required to confirm whether or not any reportable outages occurred due to the increased applicability of the standard to certain sub-200 kV transmission lines.

Total Annual Hours for Collection: (Compliance/Documentation) = 5,730 hours.

Quarterly Reporting Cost for Transmission Owners: = 230 hours @ $70/hour [108] = $16,100.

Annual Vegetation Inspections Documentation: = 220 hours @ $28/hour [109] = $6,160.

Total Annual Cost (Reporting + Record Retention): = $16,100 + $6,160 = $22,260.

One-Time Review and Modification of Plans and Documentation: 5,280 hours @ $52/hour [110] = $274,560.

Title: Mandatory Reliability Standards for the Bulk-Power System.

Action: Revisions to collection FERC–725A.

OMB Control No.: 1902–0244.

Respondents: Businesses or other for-profit institutions; not-for-profit institutions.

Frequency of Responses: Annual, quarterly, and one-time.

Necessity of the Information: Reliability Standard FAC–003–2 Transmission Vegetation Management is part of the implementation of the Congressional mandate of the Energy Policy Act of 2005 to develop mandatory and enforceable Reliability Standards to better ensure the reliability of the nation's Bulk Power System. Specifically, the revised standard would ensure that transmission owners are protecting transmission lines from encroachment of vegetation.

Internal Review: The Commission has reviewed the revisions to the currently-effective Reliability Standard and made a determination that its action is necessary to implement section 215 of the FPA. The Commission has assured itself, by means of its internal review, that there is specific, objective support for the burden estimate associated with the information requirements.

135. Interested persons may obtain information on the reporting requirements by contacting the following: Federal Energy Regulatory Commission, 888 First Street NE., Washington, DC 20426 [Attention: Ellen Brown, Office of the Executive Director, email: *DataClearance@ferc.gov,* phone: (202) 502–8663, fax: (202) 273–0873].

For submitting comments concerning the collection(s) of information and the associated burden estimate(s), please send your comments to the Commission and to the Office of Management and Budget, Office of Information and Regulatory Affairs, Washington, DC 20503 [Attention: Desk Officer for the Federal Energy Regulatory Commission, phone: (202) 395–4638, fax: (202) 395–7285]. For security reasons, comments to OMB should be submitted by email to: *oira_submission@omb.eop.gov.* Comments submitted to OMB should include OMB Control Number 1902–0244 and Docket Number RM12–4–000.

IV. Environmental Analysis

136. The Commission is required to prepare an Environmental Assessment (EA) or an Environmental Impact Statement (EIS) for any action that may have a significant adverse effect on the human environment.[111] The Commission has categorically excluded certain actions from this requirement as not having a significant effect on the human environment. In the NOPR, the Commission stated the proposed action, i.e., approval of the revised Reliability Standard, falls within the categorical exclusion for rules that are clarifying, corrective, or procedural, or that do not substantially change the effect of the regulations being amended.[112]

Comments

137. Washington DNR urges the Commission to perform an EIS on Reliability Standard FAC–003–2. According to Washington DNR, vegetation management can conflict with protection of fragile vegetation species that are identified in federal and state programs and, thus, changes to the Reliability Standard may result in adverse environmental impacts. Washington DNR comments that it cannot fully assess the impacts of the proposed Reliability Standard since it is unaware of the locations of all transmission lines operated below 200 kV that would be subject to FAC–003–2 and may affect state lands. Washington DNR contends that the proposed Commission rulemaking constitutes a major federal action with the potential for significant impacts on the environment and must not be promulgated without an EIS. Washington DNR disagrees with the Commission's reliance on the categorical exclusion for rules that are clarifying, corrective, or procedural, or do not substantially change the effect of regulations being amended. Rather, according to Washington DNR, the proposal substantively changes the existing regulations by ''applying expanded clearance standards and an entirely new and legally indefensible definition of 'right-of-way', and does so across unpublished miles of under-200 kV line not currently subject to this regulation.'' [113]

138. Washington DNR also contends that the timeframe to comply with the Version 2 standard does not include sufficient time for transmission owners to give meaningful notice to landowners, obtain relevant information about the environmental characteristics or management of adjacent lands, obtain permits, and work with landowners to create mutually agreed upon management plans.

139. APS and PacifiCorp recommend that the Commission initiate an EIS in conjunction with other federal agencies such as the U.S. Department of Agriculture, U.S. Department of Interior and DOE. According to APS, because the Version 1 standard ''compelled transmission owners to determine what should be appropriate for vegetation

[108] This figure is the average of the salary plus benefits for a manager and an engineer. The figures are taken from the Bureau of Labor and Statistics Web site at *http://bls.gov/oes/current/naics3_221000.htm.*

[109] Wage figure is based on a Commission staff study of record retention burden.

[110] This figure is the average of the salary plus benefits for an engineer and a forester. The figures are taken from Bureau of Labor and Statistics Web site at *http://bls.gov/oes/current/naics3_221000.htm.*

[111] *Regulations Implementing the National Environmental Policy Act,* Order No. 486, 52 FR 47897 (Dec. 17, 1987), FERC Stats. & Regs. Regulations Preambles 1986–1990 ¶ 30,783 (1987).

[112] *See* NOPR, 141 FERC ¶ 61,046 at P 116 (citing 18 CFR 380.4(a)(2)(ii)).

[113] Washington DNR Comments at 3.

management, the industry automatically referenced ANSI A–300 Best Management Practices for Tree Care Operations.'' [114] APS claims that the elimination of a direct reference to ANSI A–300 will ''lead to weak links'' and possibly result in some transmission owners regressing in their vegetation management programs by reverting to tree pruning. Thus, APS recommends that an EIS address implementation of ANSI A–300 and applicable best management practices on federal lands to ''provide transmission owners authority and allow them to define their program of work within the scope of their TVMP and eliminate personal opinion when working at the local level of each federal agency.''[115]

Commission Determination

140. The Commission is required to prepare an EA or an EIS for any action that may have a significant adverse effect on the human environment.[116] We disagree with the assertion that we should require an EIS or EA for Reliability Standard FAC–003–2.

141. Reliability Standard FAC–003–2 modifies the currently effective Version 1 standard. For example, it includes minimum vegetation clearance distances in the text of the standard, instead of referencing another document as in the Version 1 standard. However, the revised standard makes little change in minimum clearance distance values from the current rule and, therefore, will not have a significant impact on how transmission owners currently perform vegetation management so as to warrant an EA or EIS. The differences in minimum clearance distances between FAC–003–2 and the Version 1 standard are measured in inches, and thus do not give rise to concerns that the modified standard may have a significant adverse effect on the human environment.[117]

142. Further, we are not persuaded by Washington DNR that NERC's revised definition of the term ''Right-of-Way'' justifies undertaking an EA or EIS. Version 1 defines right-of-way based on a transmission owner's legal rights.[118] In Order No. 693, the Commission directed NERC to consider whether to change the definition of right-of-way to more precisely define the area that needed to be subject to vegetation management, i.e., to encompass the required clearance area, and not the entire legal right-of-way, particularly where the legal right-of-way may greatly exceed the area needed for effective vegetation management.[119] The revised right-of-way definition submitted with FAC–003–2 recognizes that a transmission owner may not always need to maintain vegetation to the full extent of its legal right-of-way. For example, PacifiCorp explains that a transmission owner may have acquired rights in anticipation of adding facilities at a later date, but maintenance of the additional corridor may not be necessary to assure that vegetation will not encroach into existing transmission lines.[120] The new FAC–003–2 would allow transmission owners flexibility to manage vegetation in an area less than their legal right-of-way but still in an area appropriate to assure no encroachment into a transmission line. Other than pointing to the fact that NERC revised the right-of-way definition, Washington DNR provides no explanation how bringing more precision to the area that needs to be managed in the new right-of-way definition may have a significant adverse effect on the human environment.

143. The application of the standard to certain sub-200 kV facilities under the revised standard also does not warrant the preparation of an EA or EIS. While the expanded applicability subjects the owners of certain sub-200 kV transmission facilities to compliance with FAC–003–2, we do not expect the expanded applicability of FAC–003–2 to significantly change vegetation management practices at these facilities or otherwise have a significant adverse effect on the human environment. The transmission lines that are implicated by FAC–003–2, even under the expanded applicability, by necessity, are currently subject to vegetation management practices, as transmission owners must maintain their existing rights-of-way to prevent flashovers and outages.[121] In many instances, utilities manage vegetation to comply with either good utility practice or conduct vegetation management in accordance with best industry practices.[122]

144. Moreover, while the revised Reliability Standard requires a specific result, i.e., that vegetation does not encroach into the MVCD, the standard does not require any specific means of obtaining that result. Transmission owners will have flexibility regarding how they perform vegetation management to comply with the new standard, and the circumstances (topography, weather, tree growth, etc.) will differ for each transmission owner.[123] Thus, while we believe that the impacts will not be significant because transmission owners have generally conducted vegetation management on the sub-230 kV facilities that will now be subject to compliance with FAC–003–2 (or else there would have been many more flashovers and outages), identifying those incremental impacts of the revised Reliability Standard on either a programmatic or site-specific basis would be difficult and likely not produce meaningful results. In such circumstances, where the potential impacts are not subject to meaningful quantification, courts have found that it is not necessary to conduct an EIS or EA.[124]

145. Further, we are not persuaded by the claims of APS and PacifiCorp. According to APS, because the Version 1 standard ''compelled transmission owners to determine what should be appropriate for vegetation management,

[114] APS Comments at 5.

[115] *Id.* at 6.

[116] Order No. 486, FERC Stats. & Regs. ¶ 30,783.

[117] *See* May 23, 2012, NERC Comments on PNNL Report, Att. A at 5, identifying the ''additional distance afforded by MVCD'' for a 115 kV transmission line as 2.52 inches; the greatest difference shown for a 500 kV line is 14.04 inches.

[118] NERC's Version 1 ROW definition provides:

A corridor of land on which electric lines may be located. The Transmission Owner may own the land in fee, own an easement, or have certain franchise, prescription, or license rights to construct and maintain lines.

[119] NOPR, 141 FERC ¶ 61,046 at P 16.

[120] PacifiCorp comments at 7.

[121] A 2004 study provided information on clearance distances maintained by utilities for sub-230 kV transmission lines. A comparison of this data with the minimum clearance distances for sub-200 kV transmission lines set forth in FAC–003–2 indicates that, historically, the vast majority of utilities have cleared vegetation to greater distances than the minimum values set forth in the standard. *See Utility Vegetation Management and Bulk Electric Reliability Report from the Federal Energy Regulatory Commission,* Sept. 2004, p. 11, Table 4 (Vertical Clearances Reported).

[122] *E.g.,* ANSI A–300—Best Management Practices for Tree Care Operations.

[123] In certain circumstances, transmission owners will negotiate the vegetation management activities they undertake to comply, also showing that the new standard does not dictate a specific means to manage vegetation. *See, e.g.,* Memorandum of Understanding Among the Edison Electric Institute and the U.S. Department of Agriculture Forest Service and the U.S. Department of the Interior Bureau of Land Management, Fish and Wildlife Service, National Park Service and the U.S. Environmental Protection Agency (2006), with the stated purpose of establishing ''a framework for developing cooperative right-of-way integrated vegetation management (IVM) practices * * *''

[124] *See, e.g., Piedmont Environmental Council* v. *FERC,* 558 F.3d 304 (4th Cir. 2009) (finding that no EIS was required for FERC rulemaking to implement FPA section 216 electric transmission line siting authority); *Northcoast Environmental Center* v. *Glickman,* 136 F.3d 669 (9th Cir. 1998) (EA was not required for cedar management plan because, while providing management goals and strategies, the plan did not propose site-specific activities or call for specific actions directly impacting the environment); *Northeast Utilities Service Co.* v. *FERC,* 993 F.2d 937 at 958–9 (1st Cir. 1993) (holding that EIS was not required for utility merger based on fact that new generating facilities might wind up in different locations than would have been the case absent the merger because that fact was not of sufficient significance and ''its significance was not quantifiable'').

the industry automatically referenced ANSI A–300 Best Management Practices for Tree Care Operations.'' [125] While the Version 1 standard references ANSI A–300, it does not require compliance with the document.[126] Moreover, FAC–003–2 references the same document, again as a source for best industry practices in vegetation management.[127] Thus, we are not persuaded by APS's claim that the change in references to ANSI A–300 will ''lead to weak links'' and possible ''regression'' in vegetation management practices, or that the revisions to the standard may result in a significant adverse effect on the human environment, let alone a substantial change to the regulation.

146. APS recommends that an EIS address implementation of ANSI A–300 and best management practices on federal lands to ''provide transmission owners authority and allow them to define their program of work * * * and eliminate personal opinion when working at the local level of each federal agency.'' [128] However, implementation of ANSI A–300 best practices is not a requirement of the Version 1 standard or FAC–003–2. Thus, we are not persuaded by APS that an EIS is required to study the implementation of ANSI A–300 best practices on federal lands.

147. For the reasons discussed above, we conclude that the Commission correctly asserted that approval of the revised Reliability Standard falls within the categorical exclusion set forth in section 380.4(a)(2)(ii) of the Commission's rules and regulations for promulgation of rules that are ''clarifying, corrective or procedural, or that do not substantively change the effect of * * * regulations being amended.'' Accordingly, we will not require an EIS or EA on Reliability Standard FAC–003–2.

V. Regulatory Flexibility Act Certification

148. The Regulatory Flexibility Act of 1980 (RFA) [129] generally requires a description and analysis of final rules that will have significant economic impact on a substantial number of small entities. The RFA mandates consideration of regulatory alternatives that accomplish the stated objectives of a proposed rule and that minimize any significant economic impact on a substantial number of small entities. The Small Business Administration's (SBA) Office of Size Standards develops the numerical definition of a small business.[130] The SBA has established a size standard for electric utilities, stating that a firm is small if, including its affiliates, it is primarily engaged in the transmission, generation and/or distribution of electric energy for sale and its total electric output for the preceding twelve months did not exceed four million megawatt hours.[131]

149. Reliability Standard FAC–003–2 applies to overhead transmission lines operated at 200 kV or higher, and, for the first time, to transmission lines operated at less than 200 kV if they are elements of an IROL or elements of a Major WECC Transfer Path. In addition, FAC–003–2 requires annual vegetation inspections for all applicable lines, which could result in an increase in annual inspections performed for a subset of transmission owners.

150. Comparison of the NERC Compliance Registry with data submitted to the Energy Information Administration on Form EIA–861 indicates that, of the 330 transmission owners in the United States registered by NERC, 127 of these entities qualify as small businesses. The Commission estimates that the 127 transmission owners that qualify as small businesses will incur increased costs associated solely with a one-time review of the standard and modification to existing plans and procedures. As described in the information collection section of this Final Rule, the estimated cost for the increased data collection and retention is approximately $1,000 per entity.

151. Further, some transmission owners that qualify as small entities will incur costs associated with an increase in frequency of inspections. As indicated above, the Version 1 standard requires periodic vegetation management inspections of transmission line rights-of-way at an interval determined by each transmission owner. Requirement R6 of FAC–003–2 requires each transmission owners to inspect 100 percent of the transmission lines at least once per year. Based on a review of available information, including data provided in response to a 2004 vegetation management study performed by Commission staff,[132] we estimate that approximately one third, i.e., 42, of the transmission owners that qualify as small entities would incur costs associated with more frequent inspection cycles. Assuming that (1) such small entities own approximately 50–200 miles of transmission lines, (2) approximately 15–20 miles of transmission line can be inspected per day and (3) cost of labor is approximately $47 per hour,[133] the estimated increase in inspection cost for these 42 small entities is in the range of approximately $5,000 to $10,000 per entity. As discussed above, FAC–003–2 modifies the applicability of the Reliability Standard to include overhead transmission lines that are operated below 200 kV if they are either an element of an IROL or an element of a Major WECC Transfer Path. Based on a review of the Major WECC Transfer Paths and a sample of sub-200 kV IROLs in the Eastern Interconnect, the Commission believes that most, if not all, of the transmission lines subject to the expanded applicability of FAC–003–2 are owned by large entities. Thus, the increased cost of the new rule to small entities appears to be negligible with respect to the expanded applicability of the Reliability Standard.

152. Based on the above analysis, the Commission does not consider the cost of the modified Reliability Standard to be a significant economic impact for small entities because it should not represent a significant percentage of an affected small entity's operating budget.

153. Based on this understanding, the Commission certifies that the Reliability Standard will not have a significant economic impact on a substantial number of small entities. Accordingly, no regulatory flexibility analysis is required.

VI. Document Availability

154. In addition to publishing the full text of this document in the **Federal Register**, the Commission provides all interested persons an opportunity to view and/or print the contents of this document via the Internet through FERC's Home Page (*http://www.ferc.gov*) and in FERC's Public Reference Room during normal business hours (8:30 a.m. to 5:00 p.m. Eastern time) at 888 First Street, NE., Room 2A, Washington DC 20426.

[125] APS Comments at 5.

[126] Reliability Standard FAC–003–1, fn 1 provides in full: ''ANSI A300, Tree Care Operations—Tree, Shrub, and Other Woody Plant Maintenance—Standard Practices, while not a requirement of this standard, is considered to be an industry best practice.''

[127] Reliability Standard FAC–003–2, Guidelines and Technical Basis, p. 20, provides, ''[a]n example of one approach commonly used by industry [to manage vegetation] is ANSI Standard A300.''

[128] APS Comments at 6.

[129] 5 U.S.C. 601–612.

[130] 13 CFR 121.101.

[131] 13 CFR 121.201, Sector 22, Utilities & n.1.

[132] *See Utility Vegetation Management and Bulk Electric Reliability Report from the Federal Energy Regulatory Commission,* p. 8–10 (Sept. 7, 2004). *Available at: http://www.ferc.gov/industries/electric/indus-act/reliability/veg-mgmt-rpt-final.pdf.*

[133] The wage figure is taken from the Bureau of Labor and Statistics at *http://bls.gov/oes/current/naics3_221000.htm.*

155. From FERC's Home Page on the Internet, this information is available on eLibrary. The full text of this document is available on eLibrary in PDF and Microsoft Word format for viewing, printing, and/or downloading. To access this document in eLibrary, type the docket number excluding the last three digits of this document in the docket number field.

156. User assistance is available for eLibrary and the FERC's Web site during normal business hours from FERC Online Support at 202–502–6652 (toll free at 1–866–208–3676) or email at *ferconlinesupport@ferc.gov,* or the Public Reference Room at (202) 502–8371, TTY (202) 502–8659. Email the Public Reference Room at *public.referenceroom@ferc.gov.*

VII. Effective Date and Congressional Notification

157. These regulations are effective May 28, 2013. The Commission has determined, with the concurrence of the Administrator of the Office of Information and Regulatory Affairs of OMB, that this rule is not a ''major rule'' as defined in section 351 of the Small Business Regulatory Enforcement Fairness Act of 1996.

By the Commission.

Nathaniel J. Davis, Sr.,

Deputy Secretary.

Note: The Appendix will not appear in the *Code of Federal Regulations.*

Appendix

Commenters

American Electric Power Service Corporation (AEP)
Arizona Public Service Company (APS)
Bonneville Power Administration (BPA)
The City of Santa Clara, California, d/b/a Silicon Valley Power (Santa Clara)
Duke Energy Corporation (Duke)
Electric Power Research Institute (EPRI)
FirstEnergy Service Company (FirstEnergy)
Idaho Power Company (Idaho Power)
International Transmission Company d/b/a/ ITC*Transmission,* Michigan Electric Transmission Company, LLC, ITC Midwest LLC and ITC Great Plains LLC (ITC Companies)
Kansas City Power & Light Company and KCP&L Greater Missouri Operations Company, subsidiaries of Great Plains Energy, Inc. (KCPL)
Manitoba Hydro
The New England States Committee on Electricity (NESCOE)
North American Electric Reliability Corporation (NERC)
Pacific Gas and Electric Company (PG&E)
PacifiCorp
The Pennsylvania Public Utility Commission (PA PUC)
Southern Company Services, Inc., on behalf of Alabama Power Company, Georgia Power Company, Gulf Power Company, and Mississippi Power Company (Southern Companies)
Trade Associations (jointly, Edison Electric Institute, American Public Power Association, Large Public Power Council, National Rural Electric Cooperative Association, and Transmission Access Policy Study Group)
Vermont Electric Power Company, Inc. (VELCO)
Washington State Department of Natural Resources (Washington DNR)

[FR Doc. 2013–07113 Filed 3–27–13; 8:45 am]

BILLING CODE 6717–01–P

SOCIAL SECURITY ADMINISTRATION

20 CFR Part 404

[Docket No. SSA–2010–0078]

RIN 0960–AH28

Revised Medical Criteria for Evaluating Visual Disorders

AGENCY: Social Security Administration.

ACTION: Final rules.

SUMMARY: We are revising and reorganizing the criteria in the Listing of Impairments (listings) that we use to evaluate cases involving visual disorders in adults and children under titles II and XVI of the Social Security Act (Act). The revisions reflect our program experience and guidance we have issued in response to adjudicator questions we have received since we last revised these criteria in 2006. These revisions will provide clarification about how we evaluate visual disorders and ensure more timely adjudication of claims in which we evaluate visual disorders that result in a loss of visual acuity or field.

DATES: These rules are effective April 29, 2013.

FOR FURTHER INFORMATION CONTACT: Cheryl A. Williams, Office of Medical Listings Improvement, Social Security Administration, 6401 Security Boulevard, Baltimore, Maryland 21235–6401, (410) 965–1020. For information on eligibility or filing for benefits, call our national toll-free number, 1–800–772–1213 or TTY 1–800–325–0778, or visit our Internet site, Social Security Online, at *http://www.socialsecurity.gov.*

SUPPLEMENTARY INFORMATION:

Background

We are making final the rules for evaluating visual disorders we proposed in a notice of proposed rulemaking (NPRM) published in the **Federal Register** on February 13, 2012 (77 FR 7549). The preamble to the NPRM provides a full explanation of the background of these revisions. You can view the preamble by visiting www.regulations.gov and searching for document ''SSA–2010–0078–0001.'' We are making a number of changes because of public comments to the NPRM. We explain those changes in our summary of the public comments and our responses later in this preamble. We are also making a number of minor editorial changes throughout these final rules.

Why are we revising the listings for evaluating visual disorders?

We are revising the listings for evaluating visual disorders to update the medical criteria, clarify how we evaluate visual disorders, and address adjudicator questions.

When will we begin to use these final rules?

We will begin to use these final rules on their effective date. We will continue to use the current rules until the date these final rules become effective. We will apply the final rules to new applications filed on or after the effective date of these final rules and to claims that are pending on or after the effective date.[1] These final rules will remain in effect for 5 years after the date they become effective, unless we extend them, or revise and issue them again.

Public Comments

In the NPRM, we provided the public with a 60-day comment period, which ended on April 13, 2012. We received 12 public comment letters. The comments came from members of the public, national medical organizations, disability examiners, and a national association representing disability examiners in the State agencies that make disability determinations for us. We have summarized the comments below because some of them were long. We summarized only those comments with concerns or suggestions and responded to the significant issues that were relevant to this rulemaking. Some commenters supported the proposed changes and noted the provisions with which they agreed. While we appreciate those comments, we have not summarized or responded to them

[1] This means that we will use these final rules on and after their effective date in any case in which we make a determination or decision. We expect that Federal courts will review our final decisions using the rules that were in effect at the time we issued the decisions. If a court reverses the Commissioner's final decision and remands a case for further administrative proceedings after the effective date of these final rules, we will apply these final rules to the entire period at issue in the decision we make after the court's remand.

below because they do not require a response.

Evidence

Comment: One commenter suggested that we replace the reference to ''physician or optometrist'' with ''optometrist or ophthalmologist'' in 2.00A4 and 102.00A4 where we explain what evidence we need to evaluate visual disorders, including those that result in statutory blindness under title II.

Response: We did not adopt this comment because we removed the reference to ''physician or optometrist'' from those sections. When we were considering this comment, we determined we did not need to include the reference because our rules that explain the sources who can provide evidence to establish an impairment are in 20 CFR 404.1513 and 416.913, and, therefore, we do not need to restate those sources in the introductory text.

Vision Testing

Comment: One commenter suggested that we maintain the specific references to the Humphrey Field Analyzer (HFA) and Octopus perimeters that were provided in the introductory text. The commenter believed that the specific references were essential for making accurate determinations and decisions.

Response: We did not adopt this comment because we believe that providing the requirements for acceptable perimeters and perimetry is sufficient for accurate decisionmaking. We provide the requirements for acceptable perimeters in 2.00A9 and 102.00A9. We also provide the requirements for acceptable perimetry in 2.00A6 and 102.00A6 and include examples of acceptable automated static threshold tests (HFA 30–2, HFA 24–2, and Octopus 32) that can be used to evaluate visual field loss.

Comment: One commenter suggested that we develop a formula for determining the intensity of the stimulus based on the maximum stimulus luminance of the instrument rather than include two examples in 2.00A6b(iii) and 102.00A6b(iii).

Response: We did not adopt the commenter's suggestion that we develop a formula to determine the intensity of the stimulus, but we did make a change in the final rules to address the commenter's concern. We added a third example (2.00Ab(iii)*C* and 102.00Ab(iii)*C*), so the listings now include the most common maximum stimulus luminances on automated static threshold perimeters.

Comment: One commenter said that the mean deviation in 2.03B and 102.03B varies by age and suggested that we reconsider using mean deviation as a listing criterion.

Response: We did not adopt this comment. As we said when we published the final rule in 2006 (71 FR 67013), the National Research Council recommended that a mean deviation of 22 or worse on an automated static threshold test measuring the central 30 degrees of the visual field would serve as a reasonable criterion for disability determination. We continue to agree with that recommendation.[2]

Comment: One commenter requested that we provide guidance on how to interpret and assess medical findings included in the case file that are outside of the specified testing requirements.

Response: We did not adopt this comment. We cannot provide guidance on how to use all vision tests. We believe that it is sufficient to provide specific guidance on the testing that is required to meet the listings. All other testing found in the medical evidence can be evaluated with the totality of the evidence when making a determination or decision at other steps in the sequential evaluation.

Commenter: One commenter said that our use of the term ''cycloplegic refraction'' in proposed listing sections 2.00A5d and 102.00A5d is incorrect and suggested that we revise the definition for clarity and accuracy. The commenter also noted that cycloplegic refraction is a part of a comprehensive eye examination and may be used to provide a more precise measurement of refractive error.

Response: We partially adopted this comment. We revised the definition of ''cycloplegic refraction'' in 2.00A5d and 102.00A5d, but we did not adopt the commenter's suggestion to note that cycloplegic refraction is a part of a comprehensive eye examination. Rather, we deleted the statement in the proposed rules that said cycloplegic refraction testing is not part of a routine examination.

Evaluating Vision Loss in Young Children

Comment: One commenter suggested that we modify the behavioral criteria in 102.02B for evaluating visual acuity in pre-verbal children by stating that the inability to fixate and pursue a one-inch toy at one foot with the better eye qualifies as legal blindness in children over one year of age. Another commenter suggested that we provide additional guidance in 102.00A for evaluating vision loss in young children.

Response: We did not adopt these comments. We believe that the guidance we provide in 102.00A5a(iv) sufficiently addresses the fact that very young children test differently from older children. We believe the requirements of 102.02B adequately address the possible issues that may arise when testing very young children. There is no need to modify the behavioral criteria. We did, however, clarify in final 102.00A5a(iv) that the inability to participate in testing using Snellen methodology or other comparable testing must be ''due to your young age.''

Scotomas

Comment: One commenter suggested that we expand our guidance on scotomas in 2.00A6h by including information about how scotomas affect visual fields. The commenter also suggested that we provide guidance on the test instruments that would be best for measuring and evaluating the limitations caused by the scotoma.

Response: We did not adopt this comment. We clarify the definition of scotoma by including ''field defect'' in addition to a ''non-seeing area.'' We believe that the guidance we provide in 2.00A6h (and 102.00A6h) for how we consider scotomas when evaluating vision loss, in addition to the guidance in 2.00A6a, 2.00A6b, and 2.00A6e (and 102.00A6a, 102.00A6b, and 102.00A6e) on acceptable perimeters, explains sufficiently how scotomas affect visual fields, how we consider scotomas, and which instruments are best for measuring visual field loss.

Social Security Act

Comment: Several commenters recommended that we amend the language used in the Act regarding blindness.

Response: We did not adopt these comments. We use the language in the Act in our regulations because we do not have the authority to revise the language Congress used in the Act without Congressional legislation.

Visual Efficiency

Comment: One commenter noted that the sum of the eight principal meridians we identify in the right eye in *Figure 1* in 2.00A7 is incorrect. The commenter noted that the correct sum of the principal meridians should be 530 instead of 500.

[2] National Research Council, Committee on Disability Determination for Individuals with Visual Impairments. (2002). *Visual Impairments: Determining Eligibility for Social Security Benefits.* Washington, DC: National Academy Press. Retrieved from *http://www.nap.edu/catalog/10320.html?se_side.*

Response: We partially adopted this comment. We revised *Figure 1* in 2.00A7 and 102.00A7 to show the points on the principal meridians clearly. However, because we are using the figure to explain a visual efficiency percentage of 100 percent, the sum of the meridians remains 500.

Comment: One commenter believed that we should clarify our guidance on visual efficiency values and percentages to make it easier to differentiate between the two. The commenter said that the term ''efficiency value'' is inappropriate because it indicates impairment rather than severity, and the commenter suggested that we use the term ''impairment value.'' The commenter also believed that Table 1 in 2.00A7 is confusing because it contains both values and percentages.

Response: We adopted these comments. We have revised 2.00A7 and 102.00A7, and added 2.00A8 and 102.00A8 to include language that clarifies the differences between visual acuity efficiency values and visual acuity efficiency percentages. We also revised the listing criteria for 2.04 and 102.04 to reflect the clarification.

Lenses

Comment: One commenter suggested that we remove the phrase ''because they significantly reduce the visual field'' from our guidance on telescopic lenses in 2.00A5c because reduced field is only one of many reasons why telescopic lenses should not be used to test visual acuity.

Response: We adopted this comment. We agree that there are several reasons that the telescopic lens should not be used to test visual acuity. It is unnecessary to provide an explanation for why each reason is unacceptable for our purposes. We believe that it is sufficient to simply state that visual acuity measurements obtained with telescopic lenses are unacceptable.

Comment: One commenter stated that our use of ''perimetric lenses'' in proposed 2.00A6g and 102.00A6g is outdated because these types of lenses are rarely used in modern medical practice. The commenter believed that it would be more logical to measure visual fields using the person's usual mode of corrective lenses.

Response: We partially adopted this comment. One of the goals of updating our regulations is to address advances in medical technology and terminology. We have removed the term ''perimetric lenses'' from 2.00A6g. We did not adopt the comment about using the person's usual mode of corrective lenses for testing. We continue to provide our guidance that eyeglasses should not be worn during visual field testing. Visual field testing accommodates the need for eyeglasses or other corrective lenses, allowing for accurate measurement of visual fields.

What is our authority to make rules and set procedures for determining whether a person is disabled under the statutory definition?

The Act authorizes us to make rules and regulations and to establish necessary and appropriate procedures to implement them. Sections 205(a), 702(a)(5), and 1631(d)(1).

Regulatory Procedures

Executive Order 12866, as Supplemented by Executive Order 13563

We have consulted with the Office of Management and Budget (OMB) and determined that these final rules meet the criteria for a significant regulatory action under Executive Order 12866, as supplemented by Executive Order 13563. Therefore, OMB reviewed them.

Regulatory Flexibility Act

We certify that these final rules will not have a significant economic impact on a substantial number of small entities because they affect individuals only. Therefore, the Regulatory Flexibility Act, as amended, does not require us to prepare a regulatory flexibility analysis.

Paperwork Reduction Act

These rules do not create any new or affect any existing collections and, therefore, do not require Office of Management and Budget approval under the Paperwork Reduction Act.

(Catalog of Federal Domestic Assistance Program Nos. 96.001, Social Security—Disability Insurance; 96.002, Social Security—Retirement Insurance; 96.004, Social Security—Survivors Insurance; and 96.006, Supplemental Security Income).

List of Subjects in 20 CFR Part 404

Administrative practice and procedure; Blind, Disability benefits; Old-Age, Survivors, and Disability Insurance; Reporting and recordkeeping requirements; Social Security.

Carolyn W. Colvin,

Acting Commissioner of Social Security.

For the reasons set out in the preamble, we are amending 20 CFR chapter III, part 404, subpart P as set forth below:

PART 404—FEDERAL OLD–AGE, SURVIVORS AND DISABILITY INSURANCE (1950–)

Subpart P—[Amended]

■ 1. The authority citation for subpart P of part 404 continues to read as follows:

Authority: Secs. 202, 205(a)–(b) and (d)–(h), 216(i), 221(a), (i), and (j), 222(c), 223, 225, and 702(a)(5) of the Social Security Act (42 U.S.C. 402, 405(a)–(b) and (d)–(h), 416(i), 421(a), (i), and (j), 422(c), 423, 425, and 902(a)(5)); sec. 211(b), Pub. L. 104–193, 110 Stat. 2105, 2189; sec. 202, Pub. L. 108–203, 118 Stat. 509 (42 U.S.C. 902 note).

■ 2. Amend appendix 1 to subpart P of part 404 by:

■ a. Revising item 3 of the introductory text before part A.

■ b. Revising section 2.00A in part A.

■ c. Revising sections 2.01 through 2.04 in part A.

■ d. Revising section 102.00A in part B.

■ e. Revising sections 102.101 through 102.104 in part B.

The revisions read as follows:

Appendix 1 to Subpart P of Part 404—Listing of Impairments

* * * * *

■ 3. Special Senses and Speech (2.00 and 102.00): April 29, 2018.

* * * * *

Part A

* * * * *

2.00 SPECIAL SENSES AND SPEECH

A. *How do we evaluate visual disorders?*

1. *What are visual disorders?* Visual disorders are abnormalities of the eye, the optic nerve, the optic tracts, or the brain that may cause a loss of visual acuity or visual fields. A loss of visual acuity limits your ability to distinguish detail, read, or do fine work. A loss of visual fields limits your ability to perceive visual stimuli in the peripheral extent of vision.

2. *How do we define statutory blindness?* Statutory blindness is blindness as defined in sections 216(i)(1) and 1614(a)(2) of the Social Security Act (Act).

a. The Act defines blindness as central visual acuity of 20/200 or less in the better eye with the use of a correcting lens. We use your best-corrected central visual acuity for distance in the better eye when we determine if this definition is met. (For visual acuity testing requirements, see 2.00A5.)

b. The Act also provides that an eye that has a visual field limitation such that the widest diameter of the visual field subtends an angle no greater than 20 degrees is considered as having a

central visual acuity of 20/200 or less. (For visual field testing requirements, see 2.00A6.)

c. You have statutory blindness only if your visual disorder meets the criteria of 2.02 or 2.03A. You do not have statutory blindness if your visual disorder medically equals the criteria of 2.02 or 2.03A or meets or medically equals the criteria of 2.03B, 2.03C, 2.04A, or 2.04B because your disability is based on criteria other than those in the statutory definition of blindness.

3. *What evidence do we need to establish statutory blindness under title XVI?* To establish that you have statutory blindness under title XVI, we need evidence showing only that your central visual acuity in your better eye or your visual field in your better eye meets the criteria in 2.00A2, provided that those measurements are consistent with the other evidence in your case record. We do not need documentation of the cause of your blindness. Also, there is no duration requirement for statutory blindness under title XVI (see §§ 416.981 and 416.983 of this chapter).

4. *What evidence do we need to evaluate visual disorders, including those that result in statutory blindness under title II?* To evaluate your visual disorder, we usually need a report of an eye examination that includes measurements of your best-corrected central visual acuity (see 2.00A5) or the extent of your visual fields (see 2.00A6), as appropriate. If you have visual acuity or visual field loss, we need documentation of the cause of the loss. A standard eye examination will usually indicate the cause of any visual acuity loss. A standard eye examination can also indicate the cause of some types of visual field deficits. Some disorders, such as cortical visual disorders, may result in abnormalities that do not appear on a standard eye examination. If the standard eye examination does not indicate the cause of your vision loss, we will request the information used to establish the presence of your visual disorder. If your visual disorder does not satisfy the criteria in 2.02, 2.03, or 2.04, we will request a description of how your visual disorder affects your ability to function.

5. *How do we measure your best-corrected central visual acuity?*

a. *Visual acuity testing.* When we need to measure your best-corrected central visual acuity (your optimal visual acuity attainable with the use of a corrective lens), we use visual acuity testing for distance that was carried out using Snellen methodology or any other testing methodology that is comparable to Snellen methodology.

(i) Your best-corrected central visual acuity for distance is usually measured by determining what you can see from 20 feet. If your visual acuity is measured for a distance other than 20 feet, we will convert it to a 20-foot measurement. For example, if your visual acuity is measured at 10 feet and is reported as 10/40, we will convert this measurement to 20/80.

(ii) A visual acuity recorded as CF (counts fingers), HM (hand motion only), LP or LPO (light perception or light perception only), or NLP (no light perception) indicates that no optical correction will improve your visual acuity. If your central visual acuity in an eye is recorded as CF, HM, LP or LPO, or NLP, we will determine that your best-corrected central visual acuity is 20/200 or less in that eye.

(iii) We will not use the results of pinhole testing or automated refraction acuity to determine your best-corrected central visual acuity. These tests provide an estimate of potential visual acuity but not an actual measurement of your best-corrected central visual acuity.

b. *Other test charts.* Most test charts that use Snellen methodology do not have lines that measure visual acuity between 20/100 and 20/200. Some test charts, such as the Bailey-Lovie or the Early Treatment Diabetic Retinopathy Study (ETDRS), used mostly in research settings, have such lines. If your visual acuity is measured with one of these charts, and you cannot read any of the letters on the 20/100 line, we will determine that you have statutory blindness based on a visual acuity of 20/200 or less. For example, if your best-corrected central visual acuity for distance in the better eye is 20/160 using an ETDRS chart, we will find that you have statutory blindness. Regardless of the type of test chart used, you do not have statutory blindness if you can read at least one letter on the 20/100 line. For example, if your best-corrected central visual acuity for distance in the better eye is 20/125+1 using an ETDRS chart, we will find that you do not have statutory blindness because you are able to read one letter on the 20/100 line.

c. *Testing using a specialized lens.* In some instances, you may have visual acuity testing performed using specialized lens, such as a contact lens. We will use the visual acuity measurements obtained with a specialized lens only if you have demonstrated the ability to use the specialized lens on a sustained basis. We will not use visual acuity measurements obtained with telescopic lenses.

d. *Cycloplegic refraction* is an examination of the eye performed after administering cycloplegic eye drops capable of relaxing the ability of the pupil to become smaller and temporarily paralyzing the focusing muscles. If your case record contains the results of cycloplegic refraction, we may use the results to determine your best-corrected central visual acuity. We will not purchase cycloplegic refraction.

e. *Visual evoked response (VER) testing* measures your response to visual events and can often detect dysfunction that is undetectable through other types of examinations. If you have an absent response to VER testing in your better eye, we will determine that your best-corrected central visual acuity is 20/200 or less in that eye and that your visual acuity loss satisfies the criterion in 2.02 when these test results are consistent with the other evidence in your case record. If you have a positive response to VER testing in an eye, we will not use that result to determine your best-corrected central visual acuity in that eye.

6. *How do we measure your visual fields?*

a. *General.* We generally need visual field testing when you have a visual disorder that could result in visual field loss, such as glaucoma, retinitis pigmentosa, or optic neuropathy, or when you display behaviors that suggest a visual field loss. When we need to measure the extent of your visual field loss, we use visual field testing (also referred to as perimetry) carried out using automated static threshold perimetry performed on an acceptable perimeter. (For perimeter requirements, see 2.00A9.)

b. *Automated static threshold perimetry requirements.*

(i) The test must use a white size III Goldmann stimulus and a 31.5 apostilb (asb) white background (or a 10 candela per square meter (cd/m^2) white background). The stimuli test locations must be no more than 6 degrees apart horizontally or vertically. Measurements must be reported on standard charts and include a description of the size and intensity of the test stimulus.

(ii) We measure the extent of your visual field loss by determining the portion of the visual field in which you can see a white III4e stimulus. The ''III'' refers to the standard Goldmann test stimulus size III (4 mm^2), and the ''4e'' refers to the standard Goldmann intensity filter (0 decibel (dB) attenuation, which allows presentation of the maximum luminance) used to determine the intensity of the stimulus.

(iii) In automated static threshold perimetry, the intensity of the stimulus

varies. The intensity of the stimulus is expressed in decibels (dB). A perimeter's maximum stimulus luminance is usually assigned the value 0 dB. We need to determine the dB level that corresponds to a 4e intensity for the particular perimeter being used. We will then use the dB printout to determine which points you see at a 4e intensity level (a ''seeing point''). For example:

A. When the maximum stimulus luminance (0 dB stimulus) on an acceptable perimeter is 10,000 asb, a 10 dB stimulus is equivalent to a 4e stimulus. Any point you see at 10 dB or greater is a seeing point.

B. When the maximum stimulus luminance (0 dB stimulus) on an acceptable perimeter is 4,000 asb, a 6 dB stimulus is equivalent to a 4e stimulus. Any point you see at 6 dB or greater is a seeing point.

C. When the maximum stimulus luminance (0 dB stimulus) on an acceptable perimeter is 1,000 asb, a 0 dB stimulus is equivalent to a 4e stimulus. Any point you see at 0 dB or greater is a seeing point.

c. *Evaluation under 2.03A.* To determine statutory blindness based on visual field loss in your better eye (2.03A), we need the results of a visual field test that measures the central 24 to 30 degrees of your visual field; that is, the area measuring 24 to 30 degrees from the point of fixation. Acceptable tests include the Humphrey Field Analyzer (HFA) 30–2, HFA 24–2, and Octopus 32.

d. *Evaluation under 2.03B.* To determine whether your visual field loss meets listing 2.03B, we use the mean deviation or defect (MD) from acceptable automated static threshold perimetry that measures the central 30 degrees of the visual field. MD is the average sensitivity deviation from normal values for all measured visual field locations. When using results from HFA tests, which report the MD as a negative number, we use the absolute value of the MD to determine whether your visual field loss meets listing 2.03B. We cannot use tests that do not measure the central 30 degrees of the visual field, such as the HFA 24–2, to determine if your impairment meets or medically equals 2.03B.

e. *Other types of perimetry.* If the evidence in your case contains visual field measurements obtained using manual or automated kinetic perimetry, such as Goldmann perimetry or the HFA ''SSA Test Kinetic,'' we can generally use these results if the kinetic test was performed using a white III4e stimulus projected on a white 31.5 asb (10 cd/m^2) background. Automated kinetic perimetry, such as the HFA ''SSA Test Kinetic,'' does not detect limitations in the central visual field because testing along a meridian stops when you see the stimulus. If your visual disorder has progressed to the point at which it is likely to result in a significant limitation in the central visual field, such as a scotoma (see 2.00A6h), we will not use *automated* kinetic perimetry to determine the extent of your visual field loss. Instead, we will determine the extent of your visual field loss using automated static threshold perimetry or manual kinetic perimetry.

f. *Screening tests.* We will not use the results of visual field screening tests, such as confrontation tests, tangent screen tests, or automated static screening tests, to determine that your impairment meets or medically equals a listing or to evaluate your residual functional capacity. We can consider normal results from visual field screening tests to determine whether your visual disorder is severe when these test results are consistent with the other evidence in your case record. (See §§ 404.1520(c), 404.1521, 416.920(c), and 416.921 of this chapter.) We will not consider normal test results to be consistent with the other evidence if the clinical findings indicate that your visual disorder has progressed to the point that it is likely to cause visual field loss, or you have a history of an operative procedure for retinal detachment.

g. *Use of corrective lenses.* You must not wear eyeglasses during visual field testing because they limit your field of vision. You may wear contact lenses to correct your visual acuity during the visual field test to obtain the most accurate visual field measurements. For this single purpose, you do not need to demonstrate that you have the ability to use the contact lenses on a sustained basis.

h. *Scotoma.* A scotoma is a field defect or non-seeing area (also referred to as a ''blind spot'') in the visual field surrounded by a normal field or seeing area. When we measure your visual field, we subtract the length of any scotoma, other than the normal blind spot, from the overall length of any diameter on which it falls.

7. *How do we determine your visual acuity efficiency, visual field efficiency, and visual efficiency?*

a. *General. Visual efficiency,* a calculated value of your remaining visual function, is the combination of your *visual acuity efficiency* and your *visual field efficiency* expressed as a percentage.

b. *Visual acuity efficiency.* Visual acuity efficiency is a percentage that corresponds to the best-corrected central visual acuity for distance in your better eye. See Table 1.

TABLE 1—VISUAL ACUITY EFFICIENCY

Snellen best-corrected central visual acuity for distance		Visual acuity efficiency (%) (2.04A)
English	Metric	
20/16	6/5	100
20/20	6/6	100
20/25	6/7.5	95
20/30	6/9	90
20/40	6/12	85
20/50	6/15	75
20/60	6/18	70
20/70	6/21	65
20/80	6/24	60
20/100	6/30	50

c. *Visual field efficiency.* Visual field efficiency is a percentage that corresponds to the visual field in your better eye. Under 2.03C, we require kinetic perimetry to determine your visual field efficiency percentage. We calculate the visual field efficiency percentage by adding the number of degrees you see along the eight principal meridians found on a visual field chart (0, 45, 90, 135, 180, 225, 270, and 315) in your better eye and dividing by 5. For example, in Figure 1:

A. The diagram of the left eye illustrates a visual field, as measured with a III4e stimulus, contracted to 30 degrees in two meridians (180 and 225) and to 20 degrees in the remaining six meridians. The visual efficiency percentage of this field is: $((2 \times 30) + (6 \times 20)) \div 5 = 36$ percent.

B. The diagram of the right eye illustrates the extent of a normal visual field as measured with a III4e stimulus. The sum of the eight principal meridians of this field is 500 degrees. The visual efficiency percentage of this field is $500 \div 5 = 100$ percent.

Figure 1:

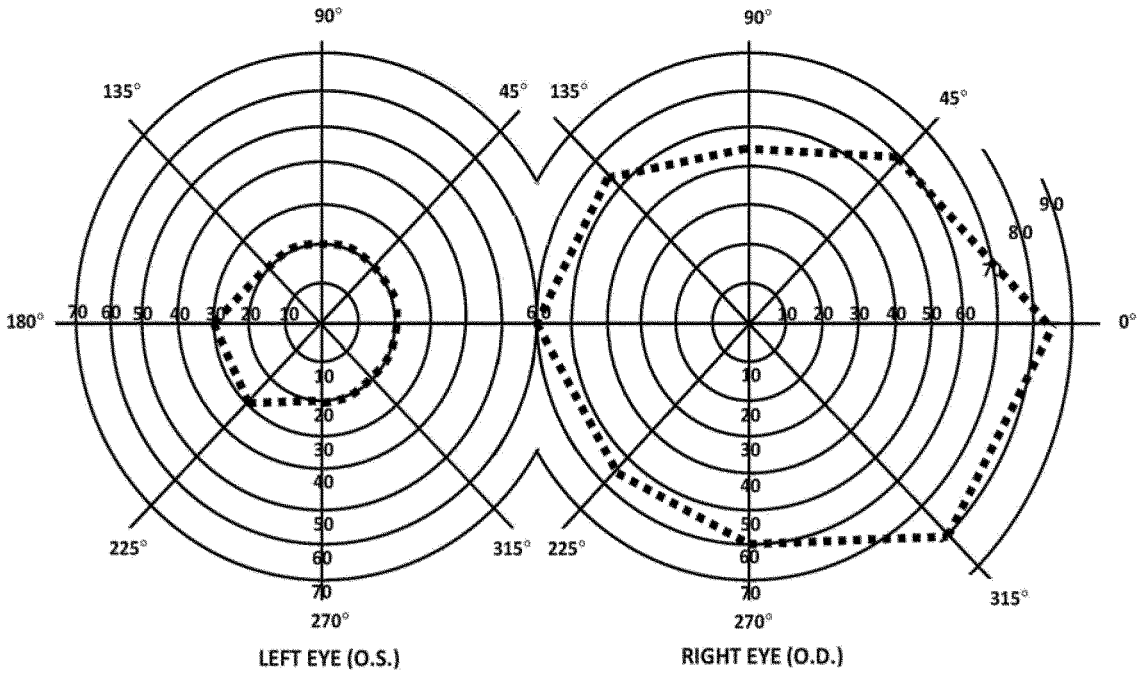

d. *Visual efficiency.* Under 2.04A, we calculate the visual efficiency percentage by multiplying your visual acuity efficiency percentage (see 2.00A7b) by your visual field efficiency percentage (see 2.00A7c) and dividing by 100. For example, if your visual acuity efficiency percentage is 75 and your visual field efficiency percentage is 36, your visual efficiency percentage is: $(75 \times 36) \div 100 = 27$ percent.

8. *How do we determine your visual acuity impairment value, visual field impairment value, and visual impairment value?*

a. *General. Visual impairment value,* a calculated value of your loss of visual function, is the combination of your *visual acuity impairment value* and your *visual field impairment value.*

b. *Visual acuity impairment value.* Your visual acuity impairment value corresponds to the best-corrected central visual acuity for distance in your better eye. See Table 2.

TABLE 2—VISUAL ACUITY IMPAIRMENT VALUE

Snellen best-corrected central visual acuity for distance		Visual acuity impairment value (2.04B)
English	Metric	
20/16	6/5	0.00
20/20	6/6	0.00
20/25	6/7.5	0.10
20/30	6/9	0.18

TABLE 2—VISUAL ACUITY IMPAIRMENT VALUE—Continued

Snellen best-corrected central visual acuity for distance		
20/40	6/12	0.30
20/50	6/15	0.40
20/60	6/18	0.48
20/70	6/21	0.54
20/80	6/24	0.60
20/100	6/30	0.70

c. *Visual field impairment value.* Your visual field impairment value corresponds to the visual field in your better eye. Using the MD from acceptable automated static threshold perimetry, we calculate the visual field impairment value by dividing the absolute value of the MD by 22. For example, if your MD on an HFA 30–2 is -16, your visual field impairment value is: $-16\sqrt{} \div 22 = 0.73$.

d. *Visual impairment value.* Under 2.04B, we calculate the visual impairment value by adding your visual acuity impairment value (see 2.00A8b) and your visual field impairment value (see 2.00A8c). For example, if your visual acuity impairment value is 0.48 and your visual field impairment value is 0.73, your visual impairment value is: $0.48 + 0.73 = 1.21$.

9. *What are our requirements for an acceptable perimeter?* We will use results from automated static threshold perimetry performed on a perimeter that:

a. Uses optical projection to generate the test stimuli.

b. Has an internal normative database for automatically comparing your performance with that of the general population.

c. Has a statistical analysis package that is able to calculate visual field indices, particularly MD.

d. Demonstrates the ability to correctly detect visual field loss and correctly identify normal visual fields.

e. Demonstrates good test-retest reliability.

f. Has undergone clinical validation studies by three or more independent laboratories with results published in peer-reviewed ophthalmic journals.

* * * * *

2.01 Category of Impairments, Special Senses and Speech

2.02 *Loss of central visual acuity.* Remaining vision in the better eye after best correction is 20/200 or less.

2.03 *Contraction of the visual field in the better eye,* with:

A. The widest diameter subtending an angle around the point of fixation no greater than 20 degrees.

OR

B. An MD of 22 decibels or greater, determined by automated static threshold perimetry that measures the central 30 degrees of the visual field (see 2.00A6d).

OR

C. A visual field efficiency of 20 percent or less, determined by kinetic perimetry (see 2.00A7c).

2.04 *Loss of visual efficiency, or visual impairment, in the better eye:*

A. A visual efficiency percentage of 20 or less after best correction (see 2.00A7d).

OR

B. A visual impairment value of 1.00 or greater after best correction (see 2.00A8d).

* * * * *

Part B

* * * * *

102.00 SPECIAL SENSES AND SPEECH

A. *How do we evaluate visual disorders?*

1. *What are visual disorders?* Visual disorders are abnormalities of the eye, the optic nerve, the optic tracts, or the brain that may cause a loss of visual acuity or visual fields. A loss of visual acuity limits your ability to distinguish detail, read, do fine work, or perform other age-appropriate activities. A loss of visual fields limits your ability to perceive visual stimuli in the peripheral extent of vision.

2. *How do we define statutory blindness?* Statutory blindness is blindness as defined in sections 216(i)(1) and 1614(a)(2) of the Social Security Act (Act).

a. The Act defines blindness as central visual acuity of 20/200 or less in the better eye with the use of a correcting lens. We use your best-corrected central visual acuity for distance in the better eye when we determine if this definition is met. (For visual acuity testing requirements, see 102.00A5.)

b. The Act also provides that an eye that has a visual field limitation such that the widest diameter of the visual field subtends an angle no greater than 20 degrees is considered as having a central visual acuity of 20/200 or less. (For visual field testing requirements, see 102.00A6.)

c. You have statutory blindness only if your visual disorder meets the criteria of 102.02A, 102.02B, or 102.03A. You do not have statutory blindness if your visual disorder medically equals the criteria of 102.02A, 102.02B, or 102.03A or meets or medically equals the criteria of 102.03B, 102.03C, 102.04A, or 102.04B because your disability is based on criteria other than those in the statutory definition of blindness.

3. *What evidence do we need to establish statutory blindness under title XVI?* To establish that you have statutory blindness under title XVI, we need evidence showing only that your central visual acuity in your better eye or your visual field in your better eye meets the criteria in 102.00A2, provided that those measurements are consistent with the other evidence in your case record. We do not need documentation of the cause of your blindness. Also, there is no duration requirement for statutory blindness under title XVI (see §§ 416.981 and 416.983 of this chapter).

4. *What evidence do we need to evaluate visual disorders, including those that result in statutory blindness under title II?* To evaluate your visual disorder, we usually need a report of an eye examination that includes measurements of your best-corrected central visual acuity (see 102.00A5) or the extent of your visual fields (see 102.00A6), as appropriate. If you have visual acuity or visual field loss, we need documentation of the cause of the loss. A standard eye examination will usually indicate the cause of any visual acuity loss. A standard eye examination can also indicate the cause of some types of visual field deficits. Some disorders, such as cortical visual disorders, may result in abnormalities that do not appear on a standard eye examination. If the standard eye examination does not indicate the cause of your vision loss, we will request the information used to establish the presence of your visual disorder. If your visual disorder does not satisfy the criteria in 102.02, 102.03, or 102.04, we will request a description of how your visual disorder affects your ability to function.

5. *How do we measure your best-corrected central visual acuity?*

a. *Visual acuity testing.* When we need to measure your best-corrected central visual acuity, which is your optimal visual acuity attainable with the use of a corrective lens, we use visual acuity testing for distance that was carried out using Snellen methodology or any other testing methodology that is comparable to Snellen methodology.

(i) Your best-corrected central visual acuity for distance is usually measured by determining what you can see from 20 feet. If your visual acuity is measured for a distance other than 20 feet, we will convert it to a 20-foot measurement. For example, if your visual acuity is measured at 10 feet and is reported as 10/40, we will convert this measurement to 20/80.

(ii) A visual acuity recorded as CF (counts fingers), HM (hand motion only), LP or LPO (light perception or light perception only), or NLP (no light perception) indicates that no optical correction will improve your visual acuity. If your central visual acuity in an eye is recorded as CF, HM, LP or LPO, or NLP, we will determine that your best-corrected central visual acuity is 20/200 or less in that eye.

(iii) We will not use the results of pinhole testing or automated refraction acuity to determine your best-corrected central visual acuity. These tests provide an estimate of potential visual acuity but not an actual measurement of your best-corrected central visual acuity.

(iv) Very young children, such as infants and toddlers, cannot participate in testing using Snellen methodology or other comparable testing. If you are unable to participate in testing using Snellen methodology or other comparable testing due to your young age, we will consider clinical findings of your fixation and visual-following behavior. If both these behaviors are absent, we will consider the anatomical findings or the results of neuroimaging, electroretinogram, or visual evoked response (VER) testing when this testing has been performed.

b. *Other test charts.*

(i) Children between the ages of 3 and 5 often cannot identify the letters on a Snellen or other letter test chart. Specialists with expertise in assessment of childhood vision use alternate methods for measuring visual acuity in young children. We consider alternate methods, for example, the Landolt C test or the tumbling-E test, which are used to evaluate young children who are unable to participate in testing using Snellen methodology, to be comparable to testing using Snellen methodology.

(ii) Most test charts that use Snellen methodology do not have lines that measure visual acuity between 20/100 and 20/200. Some test charts, such as the Bailey-Lovie or the Early Treatment Diabetic Retinopathy Study (ETDRS), used mostly in research settings, have such lines. If your visual acuity is measured with one of these charts, and you cannot read any of the letters on the 20/100 line, we will determine that you have statutory blindness based on a visual acuity of 20/200 or less. For example, if your best-corrected central visual acuity for distance in the better eye is 20/160 using an ETDRS chart, we will find that you have statutory blindness. Regardless of the type of test chart used, you do not have statutory blindness if you can read at least one letter on the 20/100 line. For example, if your best-corrected central visual acuity for distance in the better eye is 20/125+1 using an ETDRS chart, we will find that you do not have statutory blindness because you are able to read one letter on the 20/100 line.

c. *Testing using a specialized lens.* In some instances, you may have visual acuity testing performed using a specialized lens, such as a contact lens. We will use the visual acuity measurements obtained with a specialized lens only if you have demonstrated the ability to use the specialized lens on a sustained basis. We will not use visual acuity measurements obtained with telescopic lenses.

d. *Cycloplegic refraction* is an examination of the eye performed after administering cycloplegic eye drops capable of relaxing the ability of the pupil to become smaller and temporarily paralyzing the focusing muscles. If your case record contains the results of cycloplegic refraction, we may use the results to determine your best-corrected central visual acuity. We will not purchase cycloplegic refraction.

e. *VER testing* measures your response to visual events and can often detect dysfunction that is undetectable through other types of examinations. If you have an absent response to VER testing in your better eye, we will determine that your best-corrected central visual acuity is 20/200 or less in that eye and that your visual acuity loss satisfies the criterion in 102.02A or 102.02B4, as appropriate, when these test results are consistent with the other evidence in your case record. If you have a positive response to VER testing in an eye, we will not use that result to determine your best-corrected central visual acuity in that eye.

6. *How do we measure your visual fields?*

a. *General.* We generally need visual field testing when you have a visual disorder that could result in visual field loss, such as glaucoma, retinitis pigmentosa, or optic neuropathy, or when you display behaviors that suggest a visual field loss. When we need to measure the extent of your visual field loss, we use visual field testing (also referred to as perimetry) carried out using automated static threshold perimetry performed on an acceptable perimeter. (For perimeter requirements, see 102.00A9.)

b. *Automated static threshold perimetry requirements.*

(i) The test must use a white size III Goldmann stimulus and a 31.5 apostilb (asb) white background (or a 10 candela per square meter (cd/m^2) white background). The stimuli test locations must be no more than 6 degrees apart horizontally or vertically. Measurements must be reported on standard charts and include a description of the size and intensity of the test stimulus.

(ii) We measure the extent of your visual field loss by determining the portion of the visual field in which you can see a white III4e stimulus. The ''III'' refers to the standard Goldmann test stimulus size III (4 mm^2), and the ''4e'' refers to the standard Goldmann intensity filter (0 decibel (dB) attenuation, which allows presentation of the maximum luminance) used to determine the intensity of the stimulus.

(iii) In automated static threshold perimetry, the intensity of the stimulus varies. The intensity of the stimulus is expressed in decibels (dB). A perimeter's maximum stimulus luminance is usually assigned the value 0 dB. We need to determine the dB level that corresponds to a 4e intensity for the particular perimeter being used. We will then use the dB printout to determine which points you see at a 4e intensity level (a ''seeing point''). For example:

A. When the maximum stimulus luminance (0 dB stimulus) on an acceptable perimeter is 10,000 asb, a 10 dB stimulus is equivalent to a 4e stimulus. Any point you see at 10 dB or greater is a seeing point.

B. When the maximum stimulus luminance (0 dB stimulus) on an acceptable perimeter is 4,000 asb, a 6 dB stimulus is equivalent to a 4e stimulus. Any point you see at 6 dB or greater is a seeing point.

C. When the maximum stimulus luminance (0 dB stimulus) on an acceptable perimeter is 1,000 asb, a 0 dB stimulus is equivalent to a 4e stimulus. Any point you see at 0 dB or greater is a seeing point.

c. *Evaluation under 102.03A.* To determine statutory blindness based on visual field loss in your better eye (102.03A), we need the results of a visual field test that measures the central 24 to 30 degrees of your visual field; that is, the area measuring 24 to 30 degrees from the point of fixation. Acceptable tests include the Humphrey Field Analyzer (HFA) 30–2, HFA 24–2, and Octopus 32.

d. *Evaluation under 102.03B.* To determine whether your visual field loss meets listing 102.03B, we use the mean deviation or defect (MD) from acceptable automated static threshold perimetry that measures the central 30 degrees of the visual field. MD is the average sensitivity deviation from normal values for all measured visual field locations. When using results from HFA tests, which report the MD as a negative number, we use the absolute value of the MD to determine whether your visual field loss meets listing 102.03B. We cannot use tests that do not measure the central 30 degrees of the visual field, such as the HFA 24–2, to determine if your impairment meets or medically equals 102.03B.

e. *Other types of perimetry.* If your case record contains visual field measurements obtained using manual or automated kinetic perimetry, such as Goldmann perimetry or the HFA ''SSA Test Kinetic,'' we can generally use these results if the kinetic test was performed using a white III4e stimulus projected on a white 31.5 asb (10 cd/m^2) background. Automated kinetic perimetry, such as the HFA ''SSA Test Kinetic,'' does not detect limitations in the central visual field because testing along a meridian stops when you see the stimulus. If your visual disorder has progressed to the point at which it is likely to result in a significant limitation in the central visual field, such as a scotoma (see 102.00A6h), we will not use *automated* kinetic perimetry to determine the extent of your visual field loss. Instead, we will determine the extent of your visual field loss using automated static threshold perimetry or manual kinetic perimetry.

f. *Screening tests.* We will not use the results of visual field screening tests, such as confrontation tests, tangent screen tests, or automated static screening tests, to determine that your impairment meets or medically equals a listing, or functionally equals the listings. We can consider normal results from visual field screening tests to determine whether your visual disorder is severe when these test results are consistent with the other evidence in your case record. (See § 416.924(c) of this chapter.) We will not consider normal test results to be consistent with the other evidence if the clinical findings indicate that your visual disorder has progressed to the point that it is likely to cause visual field loss, or you have a history of an operative procedure for retinal detachment.

g. *Use of corrective lenses.* You must not wear eyeglasses during visual field testing because they limit your field of vision. You may wear contact lenses to correct your visual acuity during the visual field test to obtain the most accurate visual field measurements. For this single purpose, you do not need to demonstrate that you have the ability to use the contact lenses on a sustained basis.

h. *Scotoma.* A scotoma is a field defect or non-seeing area (also referred to as a ''blind spot'') in the visual field surrounded by a normal field or seeing area. When we measure your visual field, we subtract the length of any scotoma, other than the normal blind spot, from the overall length of any diameter on which it falls.

7. *How do we determine your visual acuity efficiency, visual field efficiency, and visual efficiency?*

a. *General. Visual efficiency,* a calculated value of your remaining visual function, is the combination of your *visual acuity efficiency* and your *visual field efficiency* expressed as a percentage.

b. *Visual acuity efficiency.* Visual acuity efficiency is a percentage that corresponds to the best-corrected central visual acuity for distance in your better eye. See Table 1.

TABLE 1—VISUAL ACUITY EFFICIENCY

Snellen best-corrected central visual acuity for distance		Visual acuity efficiency (%) (102.04A)
English	Metric	
20/16	6/5	100
20/20	6/6	100
20/25	6/7.5	95
20/30	6/9	90
20/40	6/12	85
20/50	6/15	75
20/60	6/18	70
20/70	6/21	65
20/80	6/24	60
20/100	6/30	50

c. *Visual field efficiency.* Visual field efficiency is a percentage that corresponds to the visual field in your better eye. Under 102.03C, we require kinetic perimetry to determine your visual field efficiency percentage. We calculate the visual field efficiency percentage by adding the number of degrees you see along the eight principal meridians found on a visual field chart (0, 45, 90, 135, 180, 225, 270, and 315) in your better eye and dividing by 5. For example, in Figure 1:

A. The diagram of the left eye illustrates a visual field, as measured with a III4e stimulus, contracted to 30 degrees in two meridians (180 and 225) and to 20 degrees in the remaining six meridians. The visual efficiency percentage of this field is: $((2 \times 30) + (6 \times 20)) \div 5 = 36$ percent.

B. The diagram of the right eye illustrates the extent of a normal visual field as measured with a III4e stimulus. The sum of the eight principal meridians of this field is 500 degrees. The visual efficiency percentage of this field is $500 \div 5 = 100$ percent.

Figure 1:

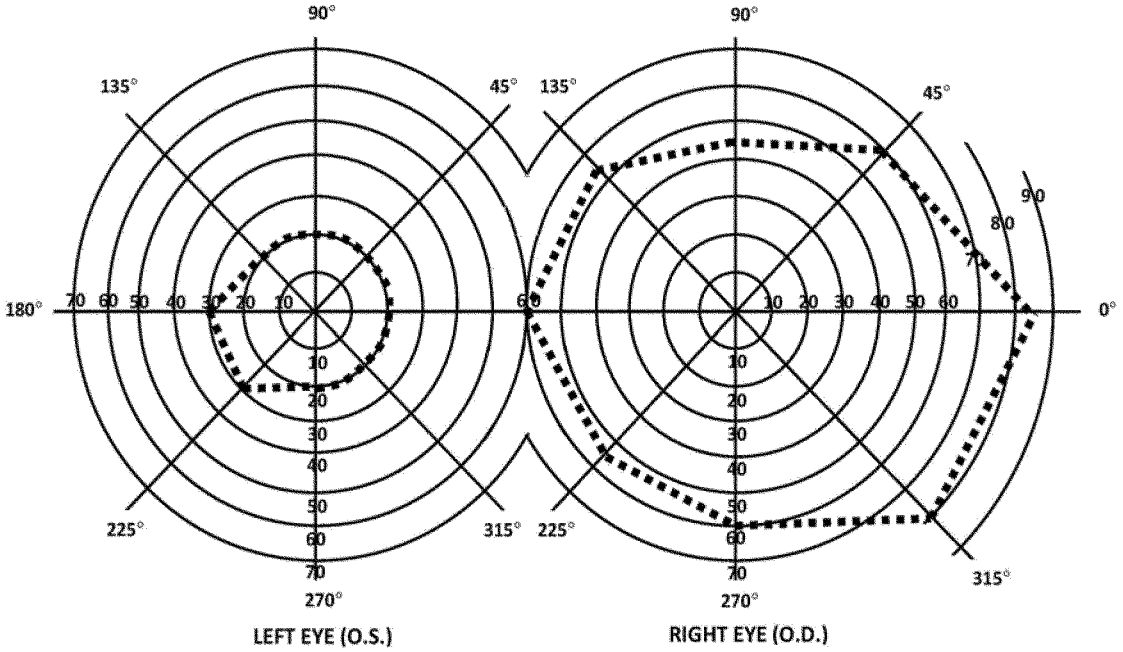

d. *Visual efficiency.* Under 102.04A, we calculate the visual efficiency percentage by multiplying your visual acuity efficiency percentage (see 102.00A7b) by your visual field efficiency percentage (see 102.00A7c) and dividing by 100. For example, if your visual acuity efficiency percentage is 75 and your visual field efficiency percentage is 36, your visual efficiency percentage is: $(75 \times 36) \div 100 = 27$ percent.

8. *How do we determine your visual acuity impairment value, visual field impairment value, and visual impairment value?*

a. *General. Visual impairment value,* a calculated value of your loss of visual function, is the combination of your *visual acuity impairment value* and your *visual field impairment value.*

b. *Visual acuity impairment value.* Your visual acuity impairment value corresponds to the best-corrected central visual acuity for distance in your better eye. See Table 2.

TABLE 2—VISUAL ACUITY IMPAIRMENT VALUE

Snellen best-corrected central visual acuity for distance		Visual acuity impairment value (102.04B)
English	Metric	
20/16	6/5	0.00
20/20	6/6	0.00
20/25	6/7.5	0.10
20/30	6/9	0.18
20/40	6/12	0.30
20/50	6/15	0.40
20/60	6/18	0.48
20/70	6/21	0.54

TABLE 2—VISUAL ACUITY IMPAIRMENT VALUE—Continued

Snellen best-corrected central visual acuity for distance		Visual acuity impairment value (102.04B)
English	Metric	
20/80	6/24	0.60
20/100	6/30	0.70

c. *Visual field impairment value.* Your visual field impairment value corresponds to the visual field in your better eye. Using the MD from acceptable automated static threshold perimetry, we calculate the visual field impairment value by dividing the absolute value of the MD by 22. For example, if your MD on an HFA 30–2 is −16, your visual field impairment value is: $|-16| \div 22 = 0.73$.

d. *Visual impairment value.* Under 102.04B, we calculate the visual impairment value by adding your visual acuity impairment value (see 102.00A8b) and your visual field impairment value (see 102.00A8c). For example, if your visual acuity impairment value is 0.48 and your visual field impairment value is 0.73, your visual impairment value is: 0.48 + 0.73 = 1.21.

9. *What are our requirements for an acceptable perimeter?* We will use results from automated static threshold perimetry performed on a perimeter that:

a. Uses optical projection to generate the test stimuli.

b. Has an internal normative database for automatically comparing your performance with that of the general population.

c. Has a statistical analysis package that is able to calculate visual field indices, particularly mean deviation or mean defect.

d. Demonstrates the ability to correctly detect visual field loss and correctly identify normal visual fields.

e. Demonstrates good test-retest reliability.

f. Has undergone clinical validation studies by three or more independent laboratories with results published in peer-reviewed ophthalmic journals.

* * * * *

102.01 Category of Impairments, Special Senses and Speech

102.02 *Loss of central visual acuity.*

A. Remaining vision in the better eye after best correction is 20/200 or less.

OR

B. An inability to participate in visual acuity testing using Snellen methodology or other comparable testing, clinical findings that fixation and visual-following behavior are absent in the better eye, and one of the following:

1. Abnormal anatomical findings indicating a visual acuity of 20/200 or less in the better eye (such as the presence of Stage III or worse retinopathy of prematurity despite surgery, hypoplasia of the optic nerve, albinism with macular aplasia, or bilateral optic atrophy); or

2. Abnormal neuroimaging documenting damage to the cerebral cortex which would be expected to prevent the development of a visual acuity better than 20/200 in the better eye (such as neuroimaging showing bilateral encephalomyelitis or bilateral encephalomalacia); or

3. Abnormal electroretinogram documenting the presence of Leber's congenital amaurosis or achromatopsia in the better eye; or

4. An absent response to VER testing in the better eye.

102.03 *Contraction of the visual field in the better eye,* with:

A. The widest diameter subtending an angle around the point of fixation no greater than 20 degrees.

OR

B. An MD of 22 decibels or greater, determined by automated static threshold perimetry that measures the central 30 degrees of the visual field (see 102.00A6d.).

OR

C. A visual field efficiency of 20 percent or less, determined by kinetic perimetry (see 102.00A7c).

102.04 *Loss of visual efficiency, or visual impairment, in the better eye:*

A. A visual efficiency percentage of 20 or less after best correction (see 102.00A7d.).

OR

B. A visual impairment value of 1.00 or greater after best correction (see 102.00A8d).

* * * * *

[FR Doc. 2013–06975 Filed 3–27–13; 8:45 am]

BILLING CODE 4191–02–P

DEPARTMENT OF DEFENSE

Department of the Navy

32 CFR Part 706

Certifications and Exemptions Under the International Regulations for Preventing Collisions at Sea, 1972

AGENCY: Department of the Navy, DoD.

ACTION: Final rule.

SUMMARY: The Department of the Navy (DoN) is amending its certifications and exemptions under the International Regulations for Preventing Collisions at Sea, 1972 (72 COLREGS), to reflect that the Deputy Assistant Judge Advocate General (DAJAG)(Admiralty and Maritime Law) has determined that USS MINNESOTA (SSN 783) is a vessel of the Navy which, due to its special construction and purpose, cannot fully comply with certain provisions of the 72 COLREGS without interfering with its special function as a naval ship. The intended effect of this rule is to warn mariners in waters where 72 COLREGS apply.

DATES: This rule is effective March 28, 2013 and is applicable beginning March 11, 2013.

FOR FURTHER INFORMATION CONTACT: Lieutenant Jocelyn Loftus-Williams, (Admiralty and Maritime Law), Office of the Judge Advocate General, Department of the Navy, 1322 Patterson Ave. SE., Suite 3000, Washington Navy Yard, DC 20374–5066, telephone 202–685–5040.

SUPPLEMENTARY INFORMATION: Pursuant to the authority granted in 33 U.S.C. 1605, the DoN amends 32 CFR Part 706.

This amendment provides notice that the DAJAG (Admiralty and Maritime Law), under authority delegated by the Secretary of the Navy, has certified that USS MINNESOTA (SSN 783) is a vessel of the Navy which, due to its special construction and purpose, cannot fully comply with the following specific provisions of 72 COLREGS without interfering with its special function as a naval ship: Annex I, paragraph 2(a)(i), pertaining to the vertical placement of the masthead light; Annex I, Section 2(f)(i), pertaining to Virginia class submarine masthead light location below the submarine identification lights; Annex I, paragraph 2(k), pertaining to the vertical separation of the anchor lights and vertical placement of the forward anchor light above the hull; Rule 30 (a) and Rule 21 (e), pertaining to arc of visibility of the forward and after anchor lights; Annex I, paragraph 3(b), pertaining to the location of the sidelights; and Rule 21(c), pertaining to the location and arc of visibility of the sternlight. The DAJAG (Admiralty and Maritime Law) has also certified that the lights involved are located in closest possible compliance with the applicable 72 COLREGS requirements.

Moreover, it has been determined, in accordance with 32 CFR Parts 296 and 701, that publication of this amendment for public comment prior to adoption is impracticable, unnecessary, and contrary to public interest since it is based on technical findings that the placement of lights on this vessel in a

manner differently from that prescribed herein will adversely affect the vessel's ability to perform its military functions.

List of Subjects in 32 CFR Part 706

Marine safety, Navigation (water), and Vessels.

For the reasons set forth in the preamble, the DoN amends part 706 of title 32 of the Code of Federal Regulations as follows:

PART 706—CERTIFICATIONS AND EXEMPTIONS UNDER THE INTERNATIONAL REGULATIONS FOR PREVENTING COLLISIONS AT SEA, 1972

■ 1. The authority citation for part 706 continues to read as follows:

Authority: 33 U.S.C. 1605.

■ 2. Section 706.2 is amended as follows:

■ A. In Table One by adding, in alpha numerical order, by vessel number, an entry for USS MINNESOTA (SSN 783);

■ B. In Table Three by adding, in alpha numerical order, by vessel number, an entry for USS MINNESOTA (SSN 783); and

■ C. Section 706.2 is amended by adding paragraphs 25 and 26 following Table Four to read as follows:

§ 706.2 Certifications of the Secretary of the Navy under Executive Order 11964 and 33 U.S.C. 1605.

* * * * *

TABLE ONE

Vessel	No.	Distance in meters of forward masthead light below minimum required height. § 2(a)(i), Annex I
* * * * *		
USS MINNESOTA	SSN 783	2.76
* * * * *		

* * * * *

TABLE THREE

Vessel	No.	Masthead lights arc of visibility; rule 21(a)	Side lights arc of visibility; rule 21(b)	Stern light arc of visibility; rule 21(c)	Side lights distance inboard of ship's sides in meters 3(b) annex 1	Stern light, distance forward of stern in meters; rule 21(c)	Forward anchor light, height above hull in meters; 2(K) annex 1	Anchor lights relationship of aft light to forward light in meters 2(K) annex 1
*	*	*	*	*	*	*	*	
USS MINNESOTA	SSN 783			205.1°	4.37	11.05	2.8	0.30 below
*	*	*	*	*	*	*		

* * * * *

25. On the following ships the masthead light is located 0.81 meters below the submarine identification lights and does not meet the requirement described by Annex I, 2(f)(i).

Vessel	No.	Distance in meters of masthead light below the submarine identification lights
USS VIRGINIA	SSN 774	0.81
USS TEXAS	SSN 775	0.81
USS HAWAII	SSN 776	0.81
USS NORTH CAROLINA	SSN 777	0.81
USS NEW HAMPSHIRE	SSN 778	0.81
USS NEW MEXICO	SSN 779	0.81
USS MISSOURI	SSN 780	0.81
USS CALIFORNIA	SSN 781	0.81
USS MISSISSIPPI	SSN 782	0.81

Vessel	No.	Distance in meters of masthead light below the submarine identification lights
USS MINNESOTA	SSN 783	0.81

26. On the following ships the arc of visibility required by Rule 30(a) and Rule 21(e), for the forward and after lights may be obstructed through the following angles relative to the ship's heading due to the ship's sail.

Vessel	No.	Obstruction angle relative to ship's heading	
		Forward anchor light	Aft anchor light
USS VIRGINIA	SSN 774	172° to 188°	359° to 1°
USS TEXAS	SSN 775	172° to 188°	359° to 1°
USS HAWAII	SSN 776	172° to 188°	359° to 1°
USS NORTH CAROLINA	SSN 777	172° to 188°	359° to 1°
USS NEW HAMPSHIRE	SSN 778	172° to 188°	359° to 1°
USS NEW MEXICO	SSN 779	172° to 188°	359° to 1°
USS MISSOURI	SSN 780	172° to 188°	359° to 1°
USS CALIFORNIA	SSN 781	172° to 188°	359° to 1°
USS MISSISSIPPI	SSN 782	172° to 188°	359° to 1°
USS MINNESOTA	SSN 783	172° to 188°	359° to 1°

Approved: March 11, 2013.

A. B. Fischer,

Captain, JAGC, U.S. Navy, Deputy Assistant Judge Advocate, General (Admiralty and Maritime Law).

Dated: March 21, 2013.

C. K. Chiappetta.

Lieutenant Commander, Office of the Judge Advocate General, U.S. Navy, Federal Register Liaison Officer.

[FR Doc. 2013–07224 Filed 3–27–13; 8:45 am]

BILLING CODE 3810–FF–P

DEPARTMENT OF HOMELAND SECURITY

Coast Guard

33 CFR Part 117

[Docket No. USCG–2013–0167]

Drawbridge Operation Regulations; Atlantic Intracoastal Waterway, Wrightsville Beach, NC and Northeast Cape Fear River, at Wilmington, NC

AGENCY: Coast Guard, DHS.

ACTION: Notice of deviation from drawbridge regulations.

SUMMARY: The Coast Guard has issued a temporary deviation from the operating schedules that govern two of North Carolina Department of Transportation (NCDOT) bridges: The S.R. 74 Bridge, across the Atlantic Intracoastal Waterway (AIWW), mile 283.1, at Wrightsville Beach, NC, and the Isabel S. Holmes Bridge across the Northeast Cape Fear River, mile 1.0, at Wilmington, NC. This deviation is necessary to accommodate the 6th annual PPD Beach2Battleship iron and half iron distance triathlons. This deviation allows both drawbridges to remain in the closed position during the race.

DATES: This deviation is effective from 7 a.m. to 6 p.m. on October 26, 2013.

ADDRESSES: The docket for this deviation, [USCG–2013–0167] is available at *http://www.regulations.gov.* Type the docket number in the ''SEARCH'' box and click ''SEARCH.'' Click on Open Docket Folder on the line associated with this deviation. You may also visit the Docket Management Facility in Room W12–140 on the ground floor of the Department of Transportation West Building, 1200 New Jersey Avenue SE., Washington, DC 20590, between 9 a.m. and 5 p.m., Monday through Friday, except Federal holidays.

FOR FURTHER INFORMATION CONTACT: If you have questions on this rule, call or email Kashanda Booker, Coast Guard; telephone 757–398–6227, email *Kashanda.L.Booker@uscg.mil.* If you have questions on viewing the docket, call Barbara Hairston, Program Manager, Docket Operations, telephone 202–366–9826.

SUPPLEMENTARY INFORMATION: The Wilmington Family YMCA, on behalf of NCDOT who owns and operates both the Isabel S. Holmes and the S.R. 74 bridges, has requested a temporary deviation from the current operating regulations set out in 33 CFR 117.829 (a) and 33 CFR 117.821(a)(4), respectively.

Due to changes in the event times, the following drawbridges will now be closed to navigation to accommodate the 6th annual PPD Beach2Battleship iron and half iron distance triathlons on Saturday, October 26, 2013: the Isabel S. Holmes Bridge from 10:30 a.m. to 6 p.m.; and the S.R.74 Bridge from 7 a.m. to 11:30 a.m.

There are no alternate routes for vessels transiting these sections of the Northeast Cape Fear River and the AIWW. The drawbridges will be able to open in the event of an emergency.

The majority of the vessels that transit through these bridges during this time of year are primarily recreational boats. The Coast Guard will inform all users of the waterways through our Local and Broadcast Notice to Mariners of the closure periods for the drawbridges so that vessels can arrange their transits to minimize any impacts caused by the temporary deviation.

In accordance with 33 CFR 117.35(e), the drawbridge must return to its regular operating schedule immediately at the end of the designated time period. This deviation from the operating regulations is authorized under 33 CFR 117.35.

Dated: March 19, 2013.

Waverly W. Gregory, Jr.,

Bridge Program Manager, Fifth Coast Guard District.

[FR Doc. 2013–07148 Filed 3–27–13; 8:45 am]

BILLING CODE 9110–04–P

DEPARTMENT OF HOMELAND SECURITY

Coast Guard

33 CFR Part 117

[Docket No. USCG–2013–0176]

Drawbridge Operation Regulations; Saugus River, Saugus and Lynn, MA

AGENCY: Coast Guard, DHS.

ACTION: Notice of temporary deviation from regulations.

SUMMARY: The Coast Guard has issued a temporary deviation from the regulation governing the operation of the Route 107 temporary bridge across the Saugus River, mile 2.5, between Saugus and Lynn, Massachusetts. The bridge will not open for vessel traffic during the installation of the moveable span. This deviation allows the bridge to remain closed for six days.

DATES: This deviation is effective from April 1, 2013, until April 6, 2013.

ADDRESSES: Documents mentioned in this preamble as being available in the docket are part of docket USCG–2013–0176 and are available online at *www.regulations.gov*, inserting USCG–2013–0176 in the ''Keyword'' and then clicking ''Search''. They are also available for inspection or copying at the Docket Management Facility (M–30), U.S. Department of Transportation, West Building Ground Floor, Room W12–140, 1200 New Jersey Avenue SE., Washington, DC, 20590, between 9 a.m. and 5 p.m., Monday through Friday, except Federal holidays.

FOR FURTHER INFORMATION CONTACT: If you have questions on this rule, call or email Mr. John McDonald, Project Officer, First Coast Guard District, telephone (617) 223–8364, *john.w.mcdonald@uscg.mil.* If you have questions on viewing the docket, call Barbara Hairston, Program Manager, Docket Operations, telephone 202–366–9826.

SUPPLEMENTARY INFORMATION: The Route 107 temporary bridge, across the Saugus River, mile 2.5, between Saugus and Lynn, Massachusetts, has a vertical clearance in the closed position of 6 feet above mean high water and 15 feet above mean low water. The bridge is required to open on signal at all times in accordance with 33 CFR 117.5.

The waterway is transited by recreational and commercial fishing boats.

The lift span at the new bridge will be installed between April 1, 2013, and April 6, 2013. During that time period the span will be in the closed position. Once the construction of the lift span is completed the draw will be placed in the full open position until all the operating machinery is installed.

The upstream facilities and the fishermen were advised regarding the six day closure. No objections were received.

Under this temporary deviation the Route 107 temporary bridge may remain in the closed position from April 1, 2013 through April 6, 2013.

In accordance with 33 CFR 117.35(e), the bridge must return to its regular operating schedule immediately at the end of the designated time period. This deviation from the operating regulations is authorized under 33 CFR 117.35.

Dated: March 18, 2013.

Gary Kassof,

Bridge Program Manager, First Coast Guard District.

[FR Doc. 2013–07151 Filed 3–27–13; 8:45 am]

BILLING CODE 9110–04–P

ENVIRONMENTAL PROTECTION AGENCY

40 CFR Part 52

[EPA–R09–OAR–2012–0713; FRL–9794–5]

Disapproval of Implementation Plan Revisions; State of California; South Coast VMT Emissions Offset Demonstrations

AGENCY: Environmental Protection Agency (EPA).

ACTION: Final rule.

SUMMARY: EPA is taking final action to withdraw its previous approvals of state implementation plan revisions submitted by the State of California to meet the vehicle-miles-traveled emissions offset requirement under the Clean Air Act for the Los Angeles-South Coast Air Basin 1-hour and 8-hour ozone nonattainment areas. EPA is also taking final action to disapprove the same plan revisions. EPA is finalizing the withdrawal and disapproval actions in response to a remand by the Ninth Circuit Court of Appeals in *Association of Irritated Residents* v. *EPA.* The effect of this action is to trigger deadlines by which new plan revisions meeting the applicable requirements must be submitted by the State of California and approved by EPA to avoid sanctions and to avoid an obligation on EPA to promulgate a federal implementation plan.

DATES: *Effective Date:* This rule is effective on April 29, 2013.

ADDRESSES: EPA has established docket EPA–R09–OAR–2012–0713 for this action. The index to the docket for this action is available electronically at *http://www.regulations.gov* and in hard copy at EPA Region IX, 75 Hawthorne Street, San Francisco, California, 94105–3901. While all documents in the docket are listed in the index, some information may be publicly available only at the hard copy location (*e.g.,* copyrighted material), and some may not be publicly available at either location (*e.g.,* CBI). To inspect the hard copy materials, please schedule an appointment during normal business hours with the contact listed in the **FOR FURTHER INFORMATION CONTACT** section below.

FOR FURTHER INFORMATION CONTACT: Wienke Tax, Air Planning Office, U.S. Environmental Protection Agency, Region 9, Mailcode AIR–2, 75 Hawthorne Street, San Francisco, California 94105–3901, 415–947–4192, *tax.wienke@epa.gov.*

SUPPLEMENTARY INFORMATION: Throughout this document, ''we,'' ''us'' and ''our'' refer to EPA.

Table of Contents

I. Summary of Today's Action
II. Background
III. Response to Public Comments
IV. Final Action and Consequences of Final Disapproval
V. Statutory and Executive Order Reviews

I. Summary of Today's Action

EPA is taking final action to withdraw our previous approvals of revisions to the state implementation plan (SIP) submitted by the State of California to demonstrate compliance with the vehicle miles traveled (VMT) emissions offset requirement under Clean Air Act (CAA) section 182(d)(1)(A) with respect to the 1-hour and 8-hour ozone standard in the South Coast nonattainment area. EPA is taking this action in response to a decision by the Ninth Circuit in *Association of Irritated Residents* v. *EPA.* Under section 110(k) of the CAA, we are also taking final action to disapprove these same plan elements because they reflect an approach to showing compliance with section 182(d)(1)(A) that was rejected by the Ninth Circuit.

Subject to our regulations at 40 CFR 52.31, our disapproval of the SIP revisions will trigger the new source review (NSR) offset sanction in CAA section 179(b)(2) and the highway funding sanction under CAA section 179(b)(1) in the South Coast ozone nonattainment area 18 months, and 24 months, respectively, after the effective date of this action unless we take final action approving SIP revisions meeting the relevant requirements of the CAA

prior to the time the sanctions would take effect.[1] In addition to the sanctions, CAA section 110(c) provides that EPA must promulgate a federal implementation plan (FIP) addressing the deficiency that is the basis for this disapproval two years after the effective date of the disapproval unless we have approved a revised SIP before that date.

II. Background

On September 19, 2012 (77 FR 58067), we proposed the same actions that we are finalizing today. In our proposed rule, we reviewed the regulatory and SIP submittal history of the South Coast Air Basin 1-hour and 8-hour nonattainment areas with respect to the VMT emissions offset requirement under CAA section 182(d)(1)(A), the related EPA actions, and the ensuing litigation and court decision. We provide a summary of that discussion herein. For a more detailed discussion, please see our September 19, 2012 proposed rule at pages 58068–58070.

The CAA requires EPA to promulgate national ambient air quality standards (NAAQS or ''standards'') for certain pervasive air pollutants to protect public health and welfare with an adequate margin of safety. In 1979, EPA promulgated an ozone NAAQS of 0.12 parts per million (ppm), averaged over a 1-hour period. Under the CAA, EPA must also designate areas as attainment, nonattainment, or unclassifiable for the NAAQS, and States with designated nonattainment areas must submit revisions to their SIPs that provide for, among other things, attainment of the standards within certain prescribed periods.

The control requirements and date by which attainment of the one-hour ozone standard was to be achieved varied with an area's classification. Under the Clean Air Act Amendments of 1990, EPA designated the Los Angeles-South Coast Air Basin Area (''South Coast'')[2] as ''extreme'' nonattainment for the 1-hour ozone standard, with an attainment date no later than November 15, 2010. See 56 FR 56694 (November 6, 1991). Extreme areas were subject to the most stringent planning requirements and were provided the most time to attain the standard. The various ozone planning requirements to which Extreme ozone nonattainment areas were subject are set forth in section 172(c) and section 182(a)–(e) of the CAA. Of particular importance for the purposes of this action, section 182(d)(1)(A) requires the following:

> Within 2 years after November 15, 1992, the State shall submit a revision that identifies and adopts specific enforceable transportation control strategies and transportation control measures to offset any growth in emissions from growth in vehicle miles traveled or numbers of vehicle trips in such area and to attain reduction in motor vehicle emissions as necessary, in combination with other emission reduction requirements of this subpart, to comply with the requirements of subsection (b)(2)(B) and (c)(2)(B) of this section (pertaining to periodic emissions reduction requirements). The State shall consider measures specified in section 7408(f) of this title, and choose from among and implement such measures as necessary to demonstrate attainment with the national ambient air quality standards; in considering such measures, the State should ensure adequate access to downtown, other commercial, and residential areas and should avoid measures that increase or relocate emissions and congestion rather than reduce them.''

As we discussed in our proposed rule, EPA believes that it is appropriate to treat the three required elements of section 182(d)(1)(A) (*i.e.,* offsetting emissions growth, attainment of the reasonable further progress (RFP) reduction, and attainment of the ozone NAAQS) as separable. As to the first element of CAA section 182(d)(1)(A) (*i.e.,* offsetting emissions growth), EPA has historically interpreted this CAA provision to allow areas to meet the requirement by demonstrating that emissions from motor vehicles decline each year through the attainment year. See 57 FR 13498, at 13521–15323 (April 16, 1992). The proposed rule and this final rule relate only to the first element of section 182(d)(1)(A) (*i.e.,* offsetting emissions growth). Herein, we refer to this element as the VMT emissions offset requirement.

In 1997, EPA replaced the 1-hour ozone standard with an 8-hour ozone standard of 0.08 ppm. See 62 FR 38856 (July 18, 1997).[3] EPA's anti-backsliding rules governing the transition from the 1-hour ozone standard to the 8-hour ozone standard revoked the 1-hour ozone standard effective June 2005 but also carried forward most of the SIP requirements, which had applied to an area by virtue of its 1-hour ozone classification, to areas designated as nonattainment for the 8-hour ozone standard. See 69 FR 23951 (April 30, 2004); 40 CFR 51.905(a)(1); and 40 CFR 51.900(f). The VMT emission offset requirement is one of the requirements carried forward; thus, the South Coast, which is designated nonattainment for the 1997 8-hour ozone standard, remains subject to the VMT emissions offset requirement for the 1-hour ozone standard notwithstanding the revocation of that standard in 2005. Moreover, the South Coast is subject to the VMT emissions offset requirement for the 1997 8-hour ozone standard itself by virtue of its classification, first as ''Severe-17,'' and now as ''Extreme,'' for the 1997 ozone standard. See 69 FR 23858 (April 30, 2004); 70 FR 71612 (November 29, 2005); 75 FR 24409 (May 5, 2010); and 40 CFR 51.902(a).

In 2008, to comply with the VMT emissions offset requirement for the 1-hour ozone standard, the South Coast Air Quality Management District (SCAQMD) submitted a demonstration showing decreases in aggregate year-over-year motor vehicle emissions in the South Coast from a base year through the applicable attainment year (2010).[4] The following year, EPA approved the South Coast 1-hour ozone VMT emissions offset demonstration as meeting the VMT emissions offset requirement. See 74 FR 10176 (March 10, 2009). The State of California also submitted a VMT emissions offset demonstration for the South Coast for the 8-hour ozone standard, and it too demonstrated compliance through a showing of aggregate year-over-year motor vehicle emissions decreases from a base year (2002) through the applicable attainment year (2024).[5]

Meanwhile, as explained in more detail in our September 19, 2012 proposed rule, EPA's approval of the SCAQMD's VMT emissions offset demonstration for the 1-hour ozone standard was challenged in the Ninth Circuit Court of Appeals, and in 2011, the court ruled against EPA, determining that EPA incorrectly interpreted the statutory phrase ''growth in emissions'' in section 182(d)(1)(A) as

[1] Under 40 CFR 52.31(d), the application of sanctions shall be deferred or stayed (depending on timing) if the State submits a new SIP that corrects the SIP deficiency and EPA proposes approval of that SIP and issues an interim final determination that the State has corrected the deficiency. This deferral or stay will continue unless and until EPA proposes to or takes final action to instead disapprove the new SIP, in which case sanctions would apply depending on the timing of EPA's action with respect to the relevant 18-month and 24-month periods.

[2] The South Coast includes Orange County, the southwestern two-thirds of Los Angeles County, southwestern San Bernardino County, and western Riverside County (see 40 CFR 81.305).

[3] In 2008, EPA tightened the 8-hour ozone NAAQS to 0.075 ppm, see 73 FR 16436 (March 27, 2008). Today's action relates only to SIP requirements arising from the classifications and designations of the South Coast with respect to the 1979 1-hour ozone and 1997 8-hour ozone standards.

[4] Letter from Elaine Chang, Deputy Executive Officer, South Coast Air Quality Management District, dated September 10, 2008, approved at 40 CFR 52.220(c)(339)(ii)(B)(2).

[5] See pages 6–23 and 6–27 (table 6–12) of the Final 2007 Air Quality Management Plan, June 2007, prepared by the South Coast Air Quality Management District.

meaning a growth in ''aggregate motor vehicle emissions.'' In other words, the court ruled that additional transportation control strategies and measures are required whenever vehicle emissions are projected to be higher than they would have been had vehicle miles traveled not increased, even when aggregate vehicle emissions are actually decreasing. *Association of Irritated Residents* v. *EPA,* 632 F.3d 584, at 596–597 (9th Cir. 2011), reprinted as amended on January 27, 2012, 686 F.3d 668, further amended February 13, 2012 (''*Association of Irritated Residents* v. *EPA''*).

Based on this reasoning, the court remanded the approval of the South Coast VMT emissions offset demonstration for the 1-hour ozone standard back to EPA for further proceedings consistent with the opinion. In May 2011, EPA filed a petition for panel rehearing requesting the court to reconsider its decision as to the VMT emissions offset requirement. In January 2012, the court denied the request and issued the mandate, but prior to the court's mandate, EPA took final action to approve the South Coast VMT emissions offset demonstration for the 1997 8-hour ozone standard as part of a larger plan approval action. See 77 FR 12674 (March 1, 2012). Shortly thereafter, several environmental and community groups filed a lawsuit in the Ninth Circuit challenging EPA's approval of that larger plan (i.e., the South Coast 1997 8-hour ozone plan). *Communities for a Better Environment, et al.* v. *EPA,* No. 12–71340.

In light of the remand in the *Association of Irritated Residents* v. *EPA* case and the current court challenge to EPA's approval of the same SIP element for the 8-hour ozone standard, EPA proposed to withdraw the Agency's previous approvals of the VMT emissions offset demonstrations submitted by the State of California to comply with the VMT emissions offset requirement under CAA section 182(d)(1)(A) for the 1-hour and the 1997 8-hour ozone standards in the South Coast. EPA also proposed to disapprove those same submittals.

EPA proposed the withdrawals of previous approvals and the disapprovals because the Ninth Circuit rejected EPA's long-standing interpretation of the first element of section 182(d)(1)(A) that states could demonstrate compliance with the VMT emissions offset requirement through submittal of aggregate motor vehicle emissions estimates showing year-over-year declines in such emissions and because the submitted demonstrations and related EPA approvals were predicated on the long-standing interpretation that was rejected by the court. Specifically, as explained in our September 19, 2012 proposed rule, we found that the submitted VMT emissions offset demonstrations are not consistent with the court's ruling on the requirements of section 182(d)(1)(A) because they fail to identify, compared to a baseline assuming no VMT growth, the level of increased emissions resulting solely from VMT growth and to show how such increased emissions have been offset through adoption and implementation of transportation control strategies and transportation control measures. See the proposed rule at page 58070.

III. Response to Public Comments

Publication of our September 19, 2012 proposed rule in the **Federal Register** started a 30-day public comment period which ended on October 19, 2012. We received two comment letters, one from the California Air Resources Board (CARB), and one from the SCAQMD. Neither comment letter objects to our proposed withdrawal or disapproval actions. Rather, both comment letters address aspects of a non-binding and non-final guidance memorandum [6] issued by EPA in response to the court's decision on the section 182(d)(1)(A) VMT emissions offset requirement.

EPA appreciates the comments from CARB and the SCAQMD on the guidance. However, the comments are beyond the scope of this rulemaking, and EPA is not here taking any final action to respond to these comments or with respect to the non-final and non-binding guidance that they address. This final action simply withdraws EPA's previous approvals of the VMT emissions offset demonstrations for the South Coast with respect to the 1-hour and 8-hour ozone NAAQS and disapproves the same because they are based on a rationale for compliance with section 182(d)(1)(A) that was rejected by the Ninth Circuit in *Association of Irritated Residents* v. *EPA.* EPA is not relying on the non-final and non-binding section 182(d)(1)(A) guidance memorandum for today's final action. If a future SIP submission implements the guidance, EPA will take separate regulatory final action to address that SIP and its satisfaction of section 182(d)(1)(A). Lastly, EPA appreciates CARB's and SCAQMD's willingness to respond promptly to the court decision and this final action, and to submit revisions to the South Coast portion of the California SIP to address the section 182(d)(1)(A) VMT emissions offset requirement for the 1-hour and 8-hour ozone standards.

IV. Final Action and Consequences of Final Disapproval

For the reasons provided in the proposed rule and summarized herein, EPA is taking final action to withdraw our previous approvals of SIP revisions submitted by the State of California to demonstrate compliance with the VMT emissions offset requirement under CAA section 182(d)(1)(A) with respect to the 1-hour and 8-hour ozone standards in the South Coast nonattainment area. EPA is taking this action in response to a decision of the Ninth Circuit in *Association of Irritated Residents* v. *EPA.* Under section 110(k), EPA is also taking final action to disapprove those same submittals because they reflect an approach to showing compliance with section 182(d)(1)(A) that was rejected by the court as inconsistent with the CAA section 182(d)(1)(A) VMT emissions offset requirement.

Pursuant to CAA section 179(a), our disapproval of the SIP revisions will trigger the NSR offset sanction in CAA section 179(b)(2) and the highway funding sanction under CAA section 179(b)(1) in the South Coast ozone nonattainment area 18 months, and 24 months, respectively, after the effective date of this action unless we take final action approving SIP revisions meeting the relevant requirements of the CAA prior to the time the sanctions would take effect. If we propose approval of a SIP revision meeting the relevant requirements of the CAA and determine at that time that it is more likely than not the deficiency has been corrected, sanctions will be deferred. See 40 CFR 52.31 which sets forth when sanctions apply and when they may be stopped or deferred.

In addition to the sanctions, CAA section 110(c) provides that EPA must promulgate a FIP addressing the deficiency that is the basis for this disapproval action two years after the effective date of the disapproval unless we have approved a revised SIP before that date.

[6] Karl Simon, Director, Transportation and Climate Division, EPA Office of Transportation and Air Quality, to Carl Edlund and Deborah Jordan, ''Guidance on Implementing Clean Air Act Section 182(d)(1)(A): Transportation Control Measures and Transportation Control Strategies to Offset Growth in Emissions Due to Growth in Vehicle Miles Travelled,'' August 30, 2012.

V. Statutory and Executive Order Reviews

A. Executive Order 12866, Regulatory Planning and Review

The Office of Management and Budget (OMB) has exempted this regulatory action from Executive Order 12866, entitled ''Regulatory Planning and Review.''

B. Paperwork Reduction Act

This action does not impose an information collection burden under the provisions of the Paperwork Reduction Act, 44 U.S.C. 3501 et seq. Burden is defined at 5 CFR 1320.3(b).

C. Regulatory Reduction Act

The Regulatory Flexibility Act (RFA) generally requires an agency to conduct a regulatory flexibility analysis of any rule subject to notice and comment rulemaking requirements unless the agency certifies that the rule will not have a significant economic impact on a substantial number of small entities. Small entities include small businesses, small not-for-profit enterprises, and small governmental jurisdictions.

This rule will not have a significant impact on a substantial number of small entities because SIP approvals or SIP disapprovals under section 110 of the Clean Air Act do not create any new requirements but simply approve or disapprove requirements that the State is already imposing. Therefore, because the withdrawal of previous approvals of certain SIP revisions, and disapproval of the same, do not create any new requirements, I certify that this action will not have a significant economic impact on a substantial number of small entities. Moreover, due to the nature of the Federal-State relationship under the Clean Air Act, preparation of a flexibility analysis would constitute Federal inquiry into the economic reasonableness of State action. The Clean Air Act forbids EPA to base its actions concerning SIPs on such grounds. *Union Electric Co.,* v. *U.S. EPA,* 427 U.S. 246, 255–66 (1976); 42 U.S.C. 7410(a)(2).

D. Unfunded Mandates Reform Act

Under section 202 of the Unfunded Mandates Reform Act of 1995 (''Unfunded Mandates Act''), signed into law on March 22, 1995, EPA must prepare a budgetary impact statement to accompany any proposed or final rule that includes a Federal mandate that may result in estimated costs to State, local, or tribal governments in the aggregate, or to the private sector, of $100 million or more. Under section 205, EPA must select the most cost-effective and least burdensome alternative that achieves the objectives of the rule and is consistent with statutory requirements. Section 203 requires EPA to establish a plan for informing and advising any small governments that may be significantly or uniquely impacted by the rule.

EPA has determined that this action does not include a Federal mandate that may result in estimated costs of $100 million or more to either State, local, or tribal governments in the aggregate, or to the private sector. This Federal action withdraws previous approvals of certain pre-existing SIP elements and disapproves the same, and imposes no new requirements. Accordingly, no additional costs to State, local, or tribal governments, or to the private sector, result from this action.

E. Executive Order 13132, Federalism

Federalism (64 FR 43255, August 10, 1999) revokes and replaces Executive Orders 12612 (Federalism) and 12875 (Enhancing the Intergovernmental Partnership). Executive Order 13132 requires EPA to develop an accountable process to ensure ''meaningful and timely input by State and local officials in the development of regulatory policies that have federalism implications.'' ''Policies that have federalism implications'' is defined in the Executive Order to include regulations that have ''substantial direct effects on the States, on the relationship between the national government and the States, or on the distribution of power and responsibilities among the various levels of government.'' Under Executive Order 13132, EPA may not issue a regulation that has federalism implications, that imposes substantial direct compliance costs, and that is not required by statute, unless the Federal government provides the funds necessary to pay the direct compliance costs incurred by State and local governments, or EPA consults with State and local officials early in the process of developing the proposed regulation. EPA also may not issue a regulation that has federalism implications and that preempts State law unless the Agency consults with State and local officials early in the process of developing the proposed regulation.

This rule will not have substantial direct effects on the States, on the relationship between the national government and the States, or on the distribution of power and responsibilities among the various levels of government, as specified in Executive Order 13132, because it merely withdraws previous approvals of certain SIP revisions implementing a Federal standard and disapproves the same, and does not alter the relationship or the distribution of power and responsibilities established in the Clean Air Act. Thus, the requirements of section 6 of the Executive Order do not apply to this rule.

F. Executive Order 13175, Coordination With Indian Tribal Governments

Executive Order 13175, entitled ''Consultation and Coordination with Indian Tribal Governments'' (65 FR 67249, November 9, 2000), requires EPA to develop an accountable process to ensure ''meaningful and timely input by tribal officials in the development of regulatory policies that have tribal implications.'' This rule does not have tribal implications, as specified in Executive Order 13175. It will not have substantial direct effects on tribal governments, on the relationship between the Federal government and Indian tribes, or on the distribution of power and responsibilities between the Federal government and Indian tribes. Thus, Executive Order 13175 does not apply to this rule.

G. Executive Order 13045, Protection of Children From Environmental Health Risks and Safety Risks

EPA interprets Executive Order 13045 (62 FR 19885, April 23, 1997) as applying only to those regulatory actions that concern health or safety risks, such that the analysis required under section 5–501 of the Executive Order has the potential to influence the regulation. This rule is not subject to Executive Order 13045, because it withdraws previous approvals of certain SIP revisions implementing a Federal standard and disapproves the same.

H. Executive Order 13211, Actions That Significantly Affect Energy Supply, Distribution, or Use

This rule is not subject to Executive Order 13211, ''Actions Concerning Regulations That Significantly Affect Energy Supply, Distribution, or Use'' (66 FR 28355, May 22, 2001) because it is not a significant regulatory action under Executive Order 12866.

I. National Technology Transfer and Advancement Act

Section 12 of the National Technology Transfer and Advancement Act (NTTAA) of 1995 requires Federal agencies to evaluate existing technical standards when developing a new regulation. To comply with NTTAA, EPA must consider and use ''voluntary consensus standards'' (VCS) if available and applicable when developing

programs and policies unless doing so would be inconsistent with applicable law or otherwise impractical.

EPA believes that VCS are inapplicable to this action. Today's action does not require the public to perform activities conducive to the use of VCS.

J. Executive Order 12898: Federal Actions To Address Environmental Justice in Minority Populations and Low-Income Population

Executive Order (EO) 12898 (59 FR 7629 (Feb. 16, 1994)) establishes federal executive policy on environmental justice. Its main provision directs federal agencies, to the greatest extent practicable and permitted by law, to make environmental justice part of their mission by identifying and addressing, as appropriate, disproportionately high and adverse human health or environmental effects of their programs, policies, and activities on minority populations and low-income populations in the United States.

EPA lacks the discretionary authority to address environmental justice in this rulemaking. In reviewing SIP submissions, EPA's role is to approve or disapprove state choices, based on the criteria of the Clean Air Act. Accordingly, this action merely withdraws previous approvals of certain SIP revisions implementing a Federal standard and disapproves the same under section 110 of the Clean Air Act and will not in-and-of itself create any new requirements. Accordingly, it does not provide EPA with the discretionary authority to address, as appropriate, disproportionate human health or environmental effects, using practicable and legally permissible methods, under Executive Order 12898.

K. Congressional Review Act

The Congressional Review Act, 5 U.S.C. 801 et seq., as added by the Small Business Regulatory Enforcement Fairness Act of 1996, generally provides that before a rule may take effect, the agency promulgating the rule must submit a rule report, which includes a copy of the rule, to each House of the Congress and to the Comptroller General of the United States. EPA will submit a report containing this rule and other required information to the U.S. Senate, the U.S. House of Representatives, and the Comptroller General of the United States prior to publication of the rule in the **Federal Register**. A major rule cannot take effect until 60 days after it is published in the **Federal Register**. This action is not a ''major rule'' as defined by 5 U.S.C. 804(2).

L. Petitions for Judicial Review

Under section 307(b)(1) of the Clean Air Act, petitions for judicial review of this action must be filed in the United States Court of Appeals for the appropriate circuit by May 28, 2013. Filing a petition for reconsideration by the Administrator of this final rule does not affect the finality of this rule for the purposes of judicial review nor does it extend the time within which a petition for judicial review may be filed, and shall not postpone the effectiveness of such rule or action. This action may not be challenged later in proceedings to enforce its requirements (see section 307(b)(2)).

List of Subjects in 40 CFR Part 52

Environmental protection, Air pollution control, Incorporation by reference, Intergovernmental relations, Ozone, Reporting and recordkeeping requirements, Volatile organic compounds.

Dated: March 14, 2013.

Jared Blumenfeld,

Regional Administrator, EPA Region IX.

Part 52, chapter I, title 40 of the Code of Federal Regulations is amended as follows:

PART 52—APPROVAL AND PROMULGATION OF IMPLEMENTATION PLANS

■ 1. The authority citation for part 52 continues to read as follows:

Authority: 42 U.S.C. 7401 *et seq.*

Subpart F—California

§ 52.220 [Amended]

■ 2. Section 52.220 is amended by removing and reserving paragraph (c)(339)(ii)(B)(*2*).

[FR Doc. 2013–06905 Filed 3–27–13; 8:45 am]

BILLING CODE 6560–50–P

ENVIRONMENTAL PROTECTION AGENCY

40 CFR Part 52

[EPA–R09–OAR–2012–0920; FRL–9779–2]

Revision to the California State Implementation Plan, South Coast Air Quality Management District

AGENCY: Environmental Protection Agency (EPA).

ACTION: Direct final rule.

SUMMARY: EPA is taking direct final action to approve a revision to the South Coast Air Quality Management District (SCAQMD) portion of the California State Implementation Plan (SIP). This revision concerns volatile organic compounds (VOC) from organic liquid storage. We are approving a local rule that regulates these emission sources under the Clean Air Act (CAA or the Act).

DATES: This rule is effective on May 28, 2013 without further notice, unless EPA receives adverse comments by April 29, 2013. If we receive such comments, we will publish a timely withdrawal in the **Federal Register** to notify the public that this direct final rule will not take effect.

ADDRESSES: Submit comments, identified by docket number [EPA–R09–OAR–2012–0920], by one of the following methods:

1. *Federal eRulemaking Portal: www.regulations.gov*. Follow the on-line instructions.
2. *Email: steckel.andrew@epa.gov*.
3. *Mail or Deliver:* Andrew Steckel (Air-4), U.S. Environmental Protection Agency Region IX, 75 Hawthorne Street, San Francisco, CA 94105–3901.

Instructions: All comments will be included in the public docket without change and may be made available online at *www.regulations.gov,* including any personal information provided, unless the comment includes Confidential Business Information (CBI) or other information whose disclosure is restricted by statute. Information that you consider CBI or otherwise protected should be clearly identified as such and should not be submitted through *www.regulations.gov* or email. *www.regulations.gov* is an ''anonymous access'' system, and EPA will not know your identity or contact information unless you provide it in the body of your comment. If you send email directly to EPA, your email address will be automatically captured and included as part of the public comment. If EPA cannot read your comment due to technical difficulties and cannot contact you for clarification, EPA may not be able to consider your comment. Electronic files should avoid the use of special characters, any form of encryption, and be free of any defects or viruses.

Docket: Generally, documents in the docket for this action are available electronically at *www.regulations.gov* and in hard copy at EPA Region IX, 75 Hawthorne Street, San Francisco, California. While all documents in the docket are listed at *www.regulations.gov,* some information may be publicly available only at the hard copy location (e.g., copyrighted material, large maps), and some may not be publicly available in either location

(e.g., CBI). To inspect the hard copy materials, please schedule an appointment during normal business hours with the contact listed in the **FOR FURTHER INFORMATION CONTACT** section.

FOR FURTHER INFORMATION CONTACT: Cara Peck, EPA Region IX, (415) 972–3382, *peck.cara@epa.gov*.

SUPPLEMENTARY INFORMATION: Throughout this document, ''we,'' ''us,'' and ''our'' refer to EPA.

Table of Contents

I. The State's Submittal
A. What rule did the State submit?
B. Are there other versions of this rule?
C. What is the purpose of the submitted rule revision?
II. EPA's Evaluation and Action
A. How is EPA evaluating the rule?
B. Does the rule meet the evaluation criteria?
C. EPA Recommendations to Further Improve the Rule
D. Public Comment and Final Action
III. Statutory and Executive Order Reviews

I. The State's Submittal

A. What rule did the state submit?

Table 1 lists the rule we are approving with the dates that it was adopted by the local air agency and submitted by the California Air Resources Board.

TABLE 1—SUBMITTED RULES

Local agency	Rule #	Rule title	Amended	Submitted
SCAQMD	463	Organic Liquid Storage	11/04/11	02/23/12

On March 13, 2012, EPA determined that the submittal for SCAQMD Rule 463 met the completeness criteria in 40 CFR Part 51 Appendix V, which must be met before formal EPA review.

B. Are there other versions of this rule?

We approved an earlier version of Rule 463 into the SIP on January 4, 2007. The SCAQMD adopted revisions to the SIP-approved version on November 4, 2011 and CARB submitted them to us on February 23, 2012. While we can act on only the most recently submitted version, we have reviewed materials provided with previous submittals.

C. What is the purpose of the submitted rule?

Volatile organic compounds (VOCs) help produce ground-level ozone and smog, which harm human health and the environment. Section 110(a) of the CAA requires States to submit regulations that control VOC emissions. SCAQMD Rule 463 controls VOC emissions from above-ground storage tanks used for storage of organic liquids. EPA's technical support document (TSD) has more information about the rule.

II. EPA's Evaluation and Action

A. How is EPA evaluating the rule?

Generally, SIP rules must be enforceable (see section 110(a) of the Act), must require Reasonably Available Control Technology (RACT) for each category of sources covered by a Control Techniques Guidelines (CTG) document as well as each major source in nonattainment areas (see sections 182(a)(2) and (b)(2)), and must not relax existing requirements (see sections 110(l) and 193). The SCAQMD regulates an ozone nonattainment area (see 40 CFR part 81), so Rule 463 must fulfill RACT.

Guidance and policy documents that we use to evaluate enforceability and RACT requirements consistently include the following:

1. ''Issues Relating to VOC Regulation Cutpoints, Deficiencies, and Deviations,'' EPA, May 25, 1988 (the Bluebook).
2. ''Guidance Document for Correcting Common VOC & Other Rule Deficiencies,'' EPA Region 9, August 21, 2001 (the Little Bluebook).
3. ''Control of Volatile Organic Emissions from Petroleum Liquid Storage in External Floating Roof Tanks,'' EPA–450/2–78–047.
4. ''Control of Volatile Organic Emissions from Storage of Petroleum Liquid in Fixed-Roof Tanks,'' EPA–450/2–77–036.

B. Does the rule meet the evaluation criteria?

We believe this rule is consistent with the relevant policy and guidance regarding enforceability, RACT, and SIP relaxations. The TSD has more information on our evaluation.

C. EPA Recommendations To Further Improve the Rule

There are no recommendations for the next time the local agency modifies the rule.

D. Public Comment and Final Action

As authorized in section 110(k)(3) of the Act, EPA is fully approving the submitted rule because we believe it fulfills all relevant requirements. We do not think anyone will object to this approval, so we are finalizing it without proposing it in advance. However, in the Proposed Rules section of this **Federal Register**, we are simultaneously proposing approval of the same submitted rule. If we receive adverse comments by April 29, 2013, we will publish a timely withdrawal in the **Federal Register** to notify the public that the direct final approval will not take effect and we will address the comments in a subsequent final action based on the proposal. If we do not receive timely adverse comments, the direct final approval will be effective without further notice on May 28, 2013. This will incorporate the rule into the federally enforceable SIP.

III. Statutory and Executive Order Reviews

Under the Clean Air Act, the Administrator is required to approve a SIP submission that complies with the provisions of the Act and applicable Federal regulations. 42 U.S.C. 7410(k); 40 CFR 52.02(a). Thus, in reviewing SIP submissions, EPA's role is to approve State choices, provided that they meet the criteria of the Clean Air Act. Accordingly, this action merely approves State law as meeting Federal requirements and does not impose additional requirements beyond those imposed by State law. For that reason, this action:

- Is not a ''significant regulatory action'' subject to review by the Office of Management and Budget under Executive Order 12866 (58 FR 51735, October 4, 1993);
- Does not impose an information collection burden under the provisions of the Paperwork Reduction Act (44 U.S.C. 3501 *et seq.*);
- Is certified as not having a significant economic impact on a substantial number of small entities under the Regulatory Flexibility Act (5 U.S.C. 601 *et seq.*);
- Does not contain any unfunded mandate or significantly or uniquely affect small governments, as described in the Unfunded Mandates Reform Act of 1995 (Pub. L. 104–4);
- Does not have Federalism implications as specified in Executive Order 13132 (64 FR 43255, August 10, 1999);

• Is not an economically significant regulatory action based on health or safety risks subject to Executive Order 13045 (62 FR 19885, April 23, 1997);

• Is not a significant regulatory action subject to Executive Order 13211 (66 FR 28355, May 22, 2001);

• Is not subject to requirements of Section 12(d) of the National Technology Transfer and Advancement Act of 1995 (15 U.S.C. 272 note) because application of those requirements would be inconsistent with the Clean Air Act; and

• Does not provide EPA with the discretionary authority to address disproportionate human health or environmental effects with practical, appropriate, and legally permissible methods under Executive Order 12898 (59 FR 7629, February 16, 1994).

In addition, this rule does not have tribal implications as specified by Executive Order 13175 (65 FR 67249, November 9, 2000), because the SIP is not approved to apply in Indian country located in the State, and EPA notes that it will not impose substantial direct costs on tribal governments or preempt tribal law.

The Congressional Review Act, 5 U.S.C. 801 et seq., as added by the Small Business Regulatory Enforcement Fairness Act of 1996, generally provides that before a rule may take effect, the agency promulgating the rule must submit a rule report, which includes a copy of the rule, to each House of the Congress and to the Comptroller General of the United States. EPA will submit a report containing this action and other required information to the U.S. Senate, the U.S. House of Representatives, and the Comptroller General of the United States prior to publication of the rule in the **Federal Register**. A major rule cannot take effect until 60 days after it is published in the **Federal Register**. This action is not a ''major rule'' as defined by 5 U.S.C. 804(2).

Under section 307(b)(1) of the Clean Air Act, petitions for judicial review of this action must be filed in the United States Court of Appeals for the appropriate circuit by May 28, 2013. Filing a petition for reconsideration by the Administrator of this final rule does not affect the finality of this action for the purposes of judicial review nor does it extend the time within which a petition for judicial review may be filed, and shall not postpone the effectiveness of such rule or action. Parties with objections to this direct final rule are encouraged to file a comment in response to the parallel notice of proposed rulemaking for this action published in the Proposed Rules section of today's **Federal Register**, rather than file an immediate petition for judicial review of this direct final rule, so that EPA can withdraw this direct final rule and address the comment in the proposed rulemaking. This action may not be challenged later in proceedings to enforce its requirements (see section 307(b)(2)).

List of Subjects in 40 CFR Part 52

Environmental protection, Air pollution control, Incorporation by reference, Intergovernmental relations, Volatile organic compounds.

Dated: January 25, 2013.

Jared Blumenfeld,

Regional Administrator, Region IX.

Part 52, Chapter I, Title 40 of the Code of Federal Regulations is amended as follows:

PART 52—APPROVAL AND PROMULGATION OF IMPLEMENTATION PLANS

■ 1. The authority citation for Part 52 continues to read as follows:

Authority: 42 U.S.C. 7401 *et seq.*

Subpart F—California

■ 2. Section 52.220 is amended by adding paragraph (c)(411)(i)(F) to read as follows:

§ 52.220 Identification of plan.

* * * * *

(c) * * *

(411) * * *

(i) * * *

(F) South Coast Air Quality Management District.

(*1*) Rule 463, ''Organic Liquid Storage,'' amended on November 4, 2011.

* * * * *

[FR Doc. 2013–06423 Filed 3–27–13; 8:45 am]

BILLING CODE 6560–50–P

DEPARTMENT OF HEALTH AND HUMAN SERVICES

42 CFR Part 88

[Docket No. CDC–2013–0002; NIOSH–261]

RIN 0920–AA48

World Trade Center Health Program Eligibility Requirements for Shanksville, Pennsylvania and Pentagon Responders

AGENCY: Centers for Disease Control and Prevention, HHS.

ACTION: Interim final rule with request for comments.

SUMMARY: Title I of the James Zadroga 9/11 Health and Compensation Act of 2010 amended the Public Health Service Act (PHS Act) by adding Title XXXIII, which establishes the World Trade Center (WTC) Health Program. The WTC Health Program is administered by the Director of the National Institute for Occupational Safety and Health (NIOSH), within the Centers for Disease Control and Prevention (CDC), in the Department of Health and Human Services (HHS), and provides medical monitoring and treatment to eligible firefighters and related personnel, law enforcement officers, and rescue, recovery, and cleanup workers who responded to the September 11, 2001, terrorist attacks in New York City, Shanksville, Pennsylvania, and at the Pentagon, and to eligible survivors of the New York City attacks. Section 3311(a)(2)(C) of the PHS Act requires the WTC Program Administrator (Administrator) to develop eligibility criteria for enrollment of Shanksville, Pennsylvania and Pentagon responders. This interim final rule establishes those eligibility criteria.

DATES: This interim final rule will be effective May 1, 2013. HHS invites written comments from interested parties on this interim final rule and on the information collection approval request sought under the Paperwork Reduction Act. Comments must be received by April 30, 2013.

ADDRESSES: You may submit comments, identified by ''RIN 0920–AA48,'' by either of the following methods:

• *Internet:* Access the Federal e-rulemaking portal at *http://www.regulations.gov.* Follow the instructions for submitting comments to Docket No. CDC–2013–0002.

• *Mail:* NIOSH Docket Office, Robert A. Taft Laboratories, MS–C34, 4676 Columbia Parkway, Cincinnati, OH 45226.

Instructions: All submissions received must include the agency name and docket number or Regulation Identifier Number (RIN) for this rulemaking. All relevant comments will be posted without change to *http://www.regulations.gov* and *http://www.cdc.gov/niosh/docket/review/docket261/default.html,* including any personal information provided. For detailed instructions on submitting comments and additional information on the rulemaking process, see the ''Public Participation'' heading of the **SUPPLEMENTARY INFORMATION** section of this document.

Docket: For access to the docket to read background documents or comments received, please go to *http://www.regulations.gov* or *http://*

www.cdc.gov/niosh/docket/review/docket261/default.html.

FOR FURTHER INFORMATION CONTACT: Frank J. Hearl, PE, Chief of Staff, National Institute for Occupational Safety and Health, Centers for Disease Control and Prevention, Patriots Plaza, Suite 9200, 395 E St. SW., Washington, DC 20201. Telephone: (202) 245–0625 (this is not a toll-free number). Email: *WTCpublicinput@cdc.gov.*

SUPPLEMENTARY INFORMATION: This notice is organized as follows:

I. Executive Summary
II. Public Participation
III. Background
A. WTC Health Program History
B. Statutory Authority
C. Summary of WTC Health Program Findings: Evidence Concerning Eligibility Criteria for Pentagon and Shanksville, Pennsylvania Responders
IV. Issuance of an Interim Final Rule with Delayed Effective Date
V. Summary of Interim Final Rule
VI. Applying for Coverage under this Interim Final Rule
VII. Regulatory Assessment Requirements
A. Executive Order 12866 and Executive Order 13563
B. Regulatory Flexibility Act
C. Paperwork Reduction Act
D. Small Business Regulatory Enforcement Fairness Act
E. Unfunded Mandates Reform Act of 1995
F. Executive Order 12988 (Civil Justice)
G. Executive Order 13132 (Federalism)
H. Executive Order 13045 (Protection of Children from Environmental Health Risks and Safety Risks)
I. Executive Order 13211 (Actions Concerning Regulations that Significantly Affect Energy Supply, Distribution, or Use)
J. Plain Writing Act of 2010

I. Executive Summary

A. Purpose of Regulatory Action

The WTC Health Program does not currently offer monitoring or treatment services to individuals who responded to the September 11, 2001, terrorist attacks at the Pentagon or in Shanksville. The statute clearly defines eligibility criteria for New York responders, whereas the Administrator is required to develop criteria for the enrollment of Pentagon and Shanksville responders. This rule establishes those eligibility criteria. Upon the effective date of this rule, individuals who believe they may be eligible for enrollment in the WTC Health Program may submit an application and supporting documentation.

B. Summary of Major Provisions

This interim final rule will establish eligibility criteria for the enrollment of responders to the September 11, 2001, terrorist attacks at the Pentagon and in Shanksville, Pennsylvania. The PHS Act does not allow for enrollment of survivors from either of the two sites. Therefore, survivors of the terrorist attacks at those sites who did not engage in rescue, recovery, cleanup or other related activities will not be eligible for enrollment.

The eligibility criteria in § 88.4(b) and (c) apply to those individuals who were a member of a fire or police department (whether fire or emergency personnel, active or retired), worked for a recovery or cleanup contractor, or were volunteers; and performed rescue, recovery, demolition, debris cleanup, or other related services at either site.

This interim final rule adds the definition of ''police department'' to the list of definitions in 42 CFR 88.1. It also adds definitions for ''Pentagon site'' and ''Shanksville, Pennsylvania site.''

In order to establish that the individual is eligible for membership in the WTC Health Program, he or she must have participated in activities at either site for a minimum amount of time. Pentagon responders must have participated at the site for at least 1 day beginning September 11, 2001, and ending on November 19, 2001. Shanksville, Pennsylvania responders must have participated at that site for at least 1 day beginning September 11, 2001, and ending on October 3, 2001.

C. Costs and Benefits

The total cost, transfers, and benefits resulting from this regulatory action are due to the expansion of the population of responders eligible to enroll in the WTC Health Program. For the purpose of this analysis, HHS assumes that between 540 and 1,467 Pentagon and Shanksville responders will enroll in the Program in 2013. We estimate the total cost of initial medical examinations, annual monitoring, and treatment for Pentagon and Shanksville responders to be at least $988,300 and no more than $3,203,400 annually through 2016.

II. Public Participation

Interested persons or organizations are invited to participate in this rulemaking by submitting written views, opinions, recommendations, and/or data. Comments are invited on any topic related to this interim final rule. In addition, HHS invites comments specifically on the following questions related to this rulemaking:

1. The terms ''Pentagon site'' and ''Shanksville, Pennsylvania site'' are not defined in the PHS Act. The Administrator believes it is necessary to define the geographic boundaries of the respective sites, in order to better identify eligible responders and has defined the terms in this interim final rule. The Administrator seeks input on whether the definitions are clearly understood and contain the locations that are relevant to the response activities. After reviewing published reports and anecdotal accounts of the events at both sites, the Administrator is unable to ascertain whether there may have been perimeter boundaries broader than our proposed definitions, and whether the proposed definitions may unintentionally exclude some response personnel who worked at the sites. We have identified a number of specific locations around the Pentagon where response activities occurred: the heliport, triage areas established on the lawn near S. Washington Road and Jefferson Davis Highway and in the Pentagon Center Court, and in the North Parking lot debris sifting area. We have also identified Fort Belvoir in Virginia and Dover Air Force Base in Delaware as locations where responders may have worked closely with victims' remains. Similarly, for the Shanksville site, we are aware that responders transported remains to the Pennsylvania National Guard armory in Friedens. We welcome input from responder organizations who participated in Pentagon and Shanksville response activities regarding these definitions.

2. The Administrator is establishing dates for the end of clean-up activities at each site. Based on the best available evidence, the rule establishes end-dates of November 19, 2001, for the Pentagon site and October 3, 2001, for the Shanksville, Pennsylvania site. The Administrator welcomes additional public input on these dates.

Comments received, including attachments and other supporting materials, are part of the public record and subject to public disclosure. Do not include any information in your comment or supporting materials that you consider confidential or inappropriate for public disclosure. HHS will consider the comments submitted and may revise the final rule as appropriate.

III. Background

A. WTC Health Program History

After the terrorist attacks of September 11, 2001, HHS, CDC, and NIOSH facilitated medical monitoring for those firefighters and related personnel, law enforcement officers, and rescue, recovery, and cleanup workers who responded to the terrorist attacks in New York City. A health screening program for responders that

began in 2002 was expanded through a series of congressional appropriations, and in 2006 the program was re-named the WTC Medical Monitoring and Treatment Program (MMTP) to reflect expanded services available for responders. A separate NIOSH health program for residents, students, and others in the community who were affected by the September 11, 2001, terrorist attacks in New York City (survivors) was funded in 2008.

Responders, including members of fire and police departments and others who conducted rescue, recovery, and cleanup at the September 11, 2001, terrorist attack sites in Shanksville, Pennsylvania and at the Pentagon were not provided services under the MMTP because congressional appropriations language did not specify inclusion of those groups.

The WTC Health Program was established by law on January 2, 2011, and went into effect July 1, 2011. Regulations established in 42 CFR Part 88 describe the process by which individuals who were firefighters and related personnel, law enforcement officers, rescue, recovery, and cleanup workers who responded to the September 11, 2001, terrorist attacks in New York City or survivors associated with the New York City attacks may be enrolled in the WTC Health Program. Part 88 also sets out the processes by which the Administrator makes enrollment determinations, certifies WTC-related health conditions for monitoring and treatment, reimburses providers for medically necessary treatment, and adds conditions to the List of WTC-Related Health Conditions.

The WTC Health Program does not currently offer monitoring or treatment services to individuals who responded to the September 11, 2001, terrorist attacks at the Pentagon or in Shanksville. The statute clearly defines eligibility criteria for New York responders, whereas the Administrator is required to develop criteria for the enrollment of Pentagon and Shanksville responders. This rule establishes those eligibility criteria. Upon the effective date of this rule, individuals who believe they may be eligible for enrollment in the WTC Health Program may submit an application and supporting documentation. Information about applying to the WTC Health Program is available at *http://www.cdc.gov/wtc.*

B. Statutory Authority

Title I of the James Zadroga 9/11 Health and Compensation Act of 2010 (Pub. L. 111–347) amended the PHS Act to add Title XXXIII,[1] establishing the WTC Health Program within HHS. Under Title XXXIII of the PHS Act, the Administrator is responsible for the WTC Health Program. All references to the Administrator in this notice mean the NIOSH Director or his or her designee.

Section 3311(a)(2)(C) of the PHS Act identifies a responder to the September 11, 2001, terrorist attacks at the Pentagon and Shanksville, Pennsylvania as an individual who ''was a member of a fire or police department (whether fire or emergency personnel, active or retired), worked for a recovery or cleanup contractor, or was a volunteer; and performed rescue, recovery, demolition, debris cleanup, or other related services.'' The Act requires that the Administrator establish the dates on which cleanup was concluded at the Pentagon and Shanksville sites, respectively. The Administrator is also required under § 3311(a)(2)(C)(ii) to develop eligibility criteria for determining whether an individual applicant is at an increased risk of developing a WTC-related health condition as a result of exposure to airborne toxins, other hazards, or adverse conditions resulting from the September 11, 2001, terrorist attacks, at each site. The Administrator is required to consult with the WTC Health Program Scientific/Technical Advisory Committee (STAC) on the development of eligibility criteria related to such exposures. The PHS Act does not allow for enrollment of survivors from either of the two sites.

C. Summary of WTC Health Program Findings: Evidence Concerning Eligibility Criteria for Pentagon and Shanksville, Pennsylvania Responders

The Administrator reviewed relevant data to determine whether further eligibility criteria, beyond those criteria described in the Act for Pentagon and Shanksville responders (see Section III.B., above), was warranted. A report to the Administrator produced by NIOSH at the Administrator's request reviewed published literature and other authoritative sources and consultations with participating responders from both sites, and served as the basis for the Administrator's consideration.[2] The Administrator assessed the reported results of environmental sampling at the respective sites as well as the estimated length of time that each of the various responder groups participated in rescue, recovery, demolition, debris cleanup, and other related response activities. The Administrator's review of the evidence identified important response and cleanup events after the terrorist attacks and provided information on the exposures potentially experienced by the responders. The review also identified the sequence of events related to clean-up at the sites and identified the likely dates of termination of clean-up activities.

Based on the evidence summarized below and after consultation with the STAC, the Administrator is revising the eligibility criterion to require that a Pentagon or Shanksville responder worked on-site for at least 1 day (the length of a standard work shift, or at least 4 hours but less than 24 hours) during the prescribed periods of time at either site. The Administrator is establishing dates for the end of clean-up activities at each site based on the best available evidence; they are November 19, 2001, for the Pentagon site and October 3, 2001, for the Shanksville, Pennsylvania site and seeks input on whether these dates are accurate.

Pentagon Site

According to the report to the Administrator, an estimated 60 Federal, State, and local agencies, including military personnel, responded to the Pentagon within the first 8 hours of the terrorist-related plane crash. Response activities included rescue efforts, site security, traffic control, and evidence collection. American Red Cross and Salvation Army personnel provided food and water, and civilian and military groups collaborated to address mental health issues. Emotional well-being support was provided by mental health professionals, clergy, physiotherapists, chiropractors, and therapy dogs and their handlers. Response activities occurred in many areas of the Pentagon Reservation, including but not limited to: the heliport; triage areas established on the Pentagon lawn near S. Washington Road and Jefferson Davis Highway and in the Pentagon Center Court; and the North Parking lot debris sifting area. Human remains were removed from the area of the crash site and driven to Fort Belvoir in Fairfax County, Virginia, where they were retrieved by Army helicopters and

[1] Title XXXIII of the PHS Act is codified at 42 U.S.C. 300mm to 300mm–61. Those portions of the Zadroga Act found in Titles II and III of Public Law 111–347 do not pertain to the WTC Health Program and are codified elsewhere.

[2] McCleery RE [2012]. Summary of Evidence for Establishing Dates on which Cleanup of the Pentagon and Shanksville, Pennsylvania Sites of the Terrorist-Related Aircraft Crashes of September 11, 2001 Concluded. Prepared for the Administrator, WTC Health Program. Released February 8, 2012. This document is available in the docket for this rulemaking.

flown to Dover Air Force Base in Delaware.[3]

The Administrator found that the firefighter groups were on-site from September 11 to September 21, 2001, at which time control of the site was turned over to the Federal Bureau of Investigation (FBI). One fire company, a technical rescue team, paramedics, and some police departments were on-site until the Department of Defense assumed control from the FBI, which occurred no later than September 28, 2001. Demolition and cleanup began on October 18 and concluded on November 19, 2001. It is unclear what period of time fire and police department personnel were on-site during the period from the end of September until the end of cleanup activities on November 19, 2001, based on the available information. Recovery or cleanup contractors were on-site until November 19, 2001, which is when the demolition activities concluded.[4] Finally, available evidence suggests that volunteers were likely on-site through September 28, 2001.[5]

Environmental sampling at the Pentagon site was conducted by U.S. Army, Navy, and Air Force personnel, as well as personnel from the former Walter Reed Army Medical Center, Department of Defense, the Uniformed Services University of the Health Sciences, and a civilian contractor. The Administrator's review of the available literature found that contamination from the jet fuel, jet fuel combustion products, combustion products from aircraft and building materials, building debris, and human remains was concentrated at the incident site and most of the environmental samples collected were below occupational health and environmental exposure standards.[6]

After reviewing the length of time the various responder groups spent working at the Pentagon site, the Administrator has determined that, for the purposes of establishing eligibility criteria for Pentagon responders in 42 CFR 88.4(b), all rescue, recovery, demolition, debris cleanup, and other related response activities at the site concluded on November 19, 2001, which is when the demolition activities concluded.

Shanksville, Pennsylvania Site

The report to the Administrator determined that fire and police departments responded immediately to the plane crash at the Shanksville, Pennsylvania site and extinguished localized hot spots and brush fires. Because of the nature of the incident, there was only a limited fire response phase and no rescue response phase; responders proceeded to a recovery and investigatory response phase. Pennsylvania State Troopers provided security in and around the site, and the FBI assumed control over the site shortly after arriving on September 11. Personnel from the Somerset County (Pennsylvania) Coroner's office, the Pennsylvania Region 13 Counter-Terrorism Task Force, the State Funeral Directors Association, and other volunteers also joined the search for airplane parts and human remains. During the response, the American Red Cross and Salvation Army provided food and mental health services to responders. Response activities occurred on the property in Stonycreek Township, Somerset County, Pennsylvania, which is bounded by Route 30 (Lincoln Highway), State Route 1019 (Buckstown Road), and State Route 1007 (Lambertsville Road). Human remains were removed from the area of the crash site and taken to the Pennsylvania National Guard Armory in Friedens, Pennsylvania for identification.[7]

FBI controlled the crash site in Shanksville beginning on September 11 and ending on September 24, 2001. At that time, control was relinquished to the Somerset County Coroner. The effort to search the area for remaining aircraft parts and human remains was conducted on September 29–30, 2001.

After the response to the crash, Environmental Resources Management, Inc. (ERM) was contracted by United Airlines to document soil and water quality at the site. ERM compared the sampling results obtained to standards established by the Pennsylvania Department of Environmental Protection (PADEP) and the Pennsylvania Land Recycling and Environmental Remediation Standards Act. Although ERM concluded that no surface or subsurface soil samples exceeded any Pennsylvania standards and the site did not require any remediation, the Administrator has concluded that it is likely that responders to the Shanksville site were exposed to contamination from the jet fuel, jet fuel combustion products, combustion products from aircraft materials, and human remains.[8] ERM's reclamation activities took place between October 1 and October 3, 2001. It is not clear from available literature whether fire personnel or volunteers were on-site during these reclamation activities. Law enforcement personnel provided security on-site for a number of years following the events of September 11, 2001.

After reviewing the length of time the various responder groups spent working at the Shanksville, Pennsylvania site, the Administrator has determined that, for the purposes of establishing eligibility criteria for Shanksville responders in 42 CFR 88.4(c), all rescue, recovery, demolition, debris cleanup, and other related response activities at the site concluded on October 3, 2001.

STAC Review of Proposed Eligibility Criteria

The report to the Administrator and the Administrator's findings, including the response end-dates, were presented to the STAC during a public meeting held February 15–16, 2012. The STAC considered the proposed eligibility criteria and agreed that they are reasonable.[9]

IV. Issuance of an Interim Final Rule with Delayed Effective Date

In most circumstances, the APA requires a public notice and comment period and consideration of the submitted comments prior to promulgation of a final rule having the effect of law. However, the APA provides for exceptions to its notice and comment procedures when an agency finds that there is good cause for dispensing with such procedures on the basis that they are impracticable, unnecessary, or contrary to the public interest. In the case of this interim final rule (IFR), HHS has determined that under 5 U.S.C. 553(b)(B), good cause

[3] Goldberg A, Papadopoulos S, Putney D, Berlage N, Welch R [2007]. Pentagon 9/11. Washington, DC: Historical Office, Office of the Secretary of Defense. *http://osdhistory.defense.gov/history.html.*

[4] Goldberg A, Papadopoulos S, Putney D, Berlage N, Welch R [2007]. Pentagon 9/11. Washington, DC: Historical Office, Office of the Secretary of Defense. *http://osdhistory.defense.gov/history.html.* Accessed March 4, 2013.

[5] A Pentagon employee would not qualify as a responder unless he or she actively participated in rescue, recovery, demolition, debris cleanup, or other related response activities at the Pentagon site.

[6] Our review of the response reports indicated that all environmental samples collected on floors 1–5 of the Pentagon were below relevant health standards, except for lead (<10%) and asbestos (<5%) wipes. The majority of lead and asbestos wipes that exceeded the limit were collected on the fourth and fifth floors before cleanup activities.

[7] Lash C [2001]. Flight 93 victim identification long, arduous. Pittsburg Post-Gazette, September 25. *http://www.post-gazette.com/headlines/20010925sledzik0925p3.asp.* Accessed January 2012.

[8] ERM [2002]. Final Closure Report Flight 93, Shanksville, Pennsylvania. Environmental Resources Management. Prepared for United Airlines.

[9] Transcript; Meeting Two of the World Trade Center Scientific/Technical Advisory Committee (STAC), Vol. I, Day One, February 15, 2012. The transcript is available in the STAC docket available at *http://www.cdc.gov/niosh/docket/archive/docket248.html.*

exists for waiving the notice and comment procedures, and that the use of such procedures would be contrary to the public interest. This IFR amends 42 CFR 88.4 to establish eligibility criteria for the enrollment of responders who responded to the September 11, 2001, terrorist attacks at the Pentagon and in Shanksville, Pennsylvania. HHS has determined that it is contrary to the public interest to delay any longer than necessary those individuals' eligibility for treatment for WTC-related health conditions that are found to be related to the time they spent conducting rescue, recovery, demolition, debris cleanup, or other related services at either the Pentagon or Shanksville sites. Postponement in the implementation of eligibility criteria for Pentagon and Shanksville responders could result in real harm to those individuals who are currently coping with one or more health conditions found on the List of WTC-Related Health Conditions in 42 CFR 88.1, or who are at risk for developing such a condition. Thus, HHS is waiving the prior notice and comment procedures in the interest of protecting the health of the Pentagon and Shanksville, Pennsylvania responders and allowing them to apply for enrollment in the WTC Health Program as soon as possible.

Members of the affected communities have been given opportunities to meet with WTC Health Program staff to learn about the WTC Health Program and share thoughts and concerns. To date, WTC Health Program staff have traveled to both Arlington, Virginia and Shanksville, Pennsylvania to meet with responder representatives, including the Arlington, Virginia and Shanksville, Pennsylvania fire chiefs, and have also met with FBI responders. WTC Health Program staff have interviewed responders at both sites to collect exposure data and timelines of events. In addition, interested parties were given the opportunity to provide comment to the STAC on the proposed eligibility criteria for the Pentagon and Shanksville responders during the February 15–16, 2012, meeting of the STAC (no comments were received).

The effective date of this interim final rule will be 31 days after publication in order to allow for any substantive feedback on the rule text. While amendments to § 88.4 will be effective 31 days after the date of publication of this IFR, they are interim and will be finalized following the receipt of any substantive public comments. (*See* Section II. Public Participation, above.)

V. Summary of Interim Final Rule

This interim final rule will establish eligibility criteria for the enrollment of responders to the September 11, 2001, terrorist attacks at the Pentagon and in Shanksville, Pennsylvania.

The eligibility criteria in § 88.4(b) and (c) apply to those individuals who were a member of a fire or police department (whether fire or emergency personnel, active or retired), worked for a recovery or cleanup contractor, or were volunteers; and performed rescue, recovery, demolition, debris cleanup, or other related services at either site.

This interim final rule adds the definition of ''police department'' to the list of definitions in 42 CFR 88.1. Section 3311(a)(2)(C) of the PHS Act identifies eligible individuals who were a ''member of a * * * police department.'' The definition of ''police department'' promulgated in this interim final rule includes members of Federal, State, and local police departments and law enforcement agencies who were present on-site at the Pentagon or in Shanksville, Pennsylvania.

This rule also adds definitions of ''Pentagon site'' and ''Shanksville, Pennsylvania site'' to § 88.1. Based on the review of available evidence discussed above in section III.C., the definition ''Pentagon site'' includes the statutory definition of Pentagon Reservation found in 10 U.S.C. 2674(f)(1): any area of the land (consisting of approximately 280 acres) and improvements thereon, located in Arlington, Virginia, on which the Pentagon Office Building, Federal Building Number 2, the Pentagon heating and sewage treatment plants, and other related facilities are located, including various areas designated for the parking of vehicles, affected by the terrorist-related aircraft crash on September 11, 2001. The Administrator believes that the specific locations where response activities occurred near the Pentagon were contained within the Pentagon Reservation, although the Administrator is seeking comment on boundaries of the Pentagon Reservation and the specific locations where response activities occurred. The Administrator has determined that the definition should also include those areas at Fort Belvoir in Virginia and at the Dover Port Mortuary at Dover Air Force Base in Delaware involved in the recovery, identification, and transportation of human remains from the terrorist attacks. The mortuary at Dover and areas of Fort Belvoir are included in the definition of ''Pentagon site'' in order to parallel the provision in the eligibility criteria for New York responders identifying responders (including morgue workers) who were involved in the examination and handling of human remains from the World Trade Center.

After review of the evidence of events at the Shanksville, Pennsylvania site, the Administrator has defined ''Shanksville, Pennsylvania site'' as the property in Stonycreek Township, Somerset County, Pennsylvania, which is bounded by Route 30 (Lincoln Highway), State Route 1019 (Buckstown Road), and State Route 1007 (Lambertsville Road); the site also includes the Pennsylvania National Guard Armory in Friedens, Pennsylvania. Similar to the Pentagon site definition described above, the armory in Friedens is identified in order to establish parity with the eligibility criteria for the New York responders involved in the examination and handling of human remains.

In order to establish that the individual is eligible for membership in the WTC Health Program, he or she must have participated in activities at either site for a minimum amount of time. Pentagon responders must have participated at the site for at least 1 day beginning September 11, 2001, and ending on November 19, 2001. Shanksville, Pennsylvania responders must have participated at that site for at least 1 day beginning September 11, 2001, and ending on October 3, 2001. ''One day'' is defined in 42 CFR 88.1 as ''the length of a standard work shift, or at least 4 hours but less than 24 hours.'' The Administrator determined that presence at either site for at least 4 hours is in keeping with the corresponding minimum amount of time required to establish eligibility for responders in the New York City area. (*See,* New York City responders eligibility criteria, 42 CFR 88.4(a).) The report to the Administrator (discussed in Section III.C., above) found that while area sampling was conducted at both sites in the aftermath of the terrorist attacks, personal exposure data is not available. The Administrator recognizes the potential for responders at the two sites to have been exposed to chemical, biological, and physical hazards, similar to some of the exposures experienced as a result of the September 11, 2001, terrorist attacks on the former World Trade Center site in New York City.

VI. Applying for Coverage under this Interim Final Rule

Upon promulgation of this interim final rule, individuals who were a member of a fire or police department (whether fire or emergency personnel,

active or retired), worked for a recovery or cleanup contractor, or who were volunteers; and performed rescue, recovery, demolition, debris cleanup, or other related services at either the Pentagon or Shanksville sites may apply to obtain coverage under the WTC Health Program. The application process for responders can be found in 42 CFR 88.5.

Beginning with the effective date of this rulemaking, an individual who believes that he or she meets the eligibility criteria established in this interim final rule and qualifies as a 'WTC responder (a 'WTC responder' is defined in § 88.1 as an individual who meets the specified eligibility criteria),[10] must fill out and submit an application form to the WTC Health Program indicating that he or she meets certain eligibility criteria described in § 88.4.[11] An individual who can demonstrate that he or she meets the eligibility criteria may be enrolled in the WTC Health Program. Supporting documentation is required to be submitted along with the application and if no documentation is included (*e.g.,* a pay stub or personnel roster), the individual must explain how he or she attempted to find documentation and why the attempt was unsuccessful. The application must be signed by the applicant or a designated representative. An applicant who knowingly provides false information may be subject to a fine and/or imprisonment of not more than 5 years.

Once enrolled in the WTC Health Program, a WTC responder may receive treatment for specific physical and mental health conditions that have been certified by the WTC Health Program and are included on the List of WTC-Related Health Conditions.[12] The List of WTC-Related Health Conditions was established by Congress and may be expanded by the Administrator through rulemaking; the List is included in § 88.1, the definitions section of this rule. In order for an individual enrolled as a WTC responder to obtain coverage for treatment of any health condition on the List of WTC-Related Health Conditions, a two-step process must be satisfied. First, a physician at a Clinical Center of Excellence or in the nationwide provider network must make a determination that the particular health condition for which the responder seeks treatment coverage is both on the List of WTC-Related Health Conditions and that exposure to airborne toxins, other hazards, or adverse conditions resulting from the September 11, 2001, terrorist attacks is substantially likely to be a significant factor in aggravating, contributing to, or causing the health condition for which the responder seeks treatment coverage.[13] Pursuant to 42 CFR 88.12(a), the physician's determination must be based on the following: (1) an assessment of the individual's exposure to airborne toxins, any other hazard, or any other adverse condition resulting from the September 11, 2001, attacks; and (2) the type of symptoms reported and the temporal sequence of those symptoms. As a second statutory requirement, all physician determinations are reviewed by the Administrator. The Administrator will certify the determination unless he or she determines that the responder's condition is not on the List of WTC-Related Health Conditions or that exposure to airborne toxins, other hazards, or adverse conditions resulting from the September 11, 2001, terrorist attacks, is not substantially likely to be a significant factor in aggravating, contributing to, or causing the condition.

VII. Regulatory Assessment Requirements

A. Executive Order 12866 and Executive Order 13563

Executive Orders 12866 and 13563 direct agencies to assess all costs and benefits of available regulatory alternatives and, if regulation is necessary, to select regulatory approaches that maximize net benefits (including potential economic, environmental, public health and safety effects, distributive impacts, and equity). E.O. 13563 emphasizes the importance of quantifying both costs and benefits, of reducing costs, of harmonizing rules, and of promoting flexibility.

This interim final rule has been determined to be a ''significant'' action, as defined in section 3(f)(1) of E.O. 12866. Providing medical monitoring and treatment for Pentagon and Shanksville, Pennsylvania responders through the WTC Health Program will have an annual effect on the economy of less than $100 million.

Summary

The total cost, transfers, and benefits resulting from this regulatory action result from the expansion of the population of responders eligible to enroll in the WTC Health Program. In July, 2011, HHS published an interim final rule establishing the WTC Health Program regulations at 42 CFR Part 88 (76 FR 38914, 38921, July 1, 2011). HHS estimated the costs and benefits associated with the development of the WTC Health Program and the subsequent enrollment, treatment, and monitoring of responders and survivors of the September 11, 2001, terrorist attacks on New York City. For the purpose of this analysis and as discussed below, HHS assumes that a percentage of enrolled responders will not have health insurance. Program costs associated with these uninsured responders are characterized as new ''societal costs'' since these responders would not otherwise receive the health care available from the WTC Health Program. HHS further assumes that all of these previously uninsured responders will have access to health insurance after implementation of relevant provisions of the Patient Protection and Affordable Care Act (Affordable Care Act) (Pub. L. 111–148) in 2014. Accordingly, for the years 2014–2016, all program costs, including program costs for these previously uninsured responders, are characterized as ''transfers,'' since all responders will have access to some type of health insurance under the Affordable Care Act beginning in 2014 and the impact of this regulation is only to ''transfer'' the cost from other such payers to the WTC Health Program. The costs and transfers identified in the July 2011 interim final rule include administrative expenses for enrollment and claims processing, the costs of medical monitoring, and medical treatment costs. To estimate the costs associated with enrollment and medical care of the Pentagon and Shanksville responders, HHS assumes that the program and administrative costs will be analogous to those costs for the New York City responders. HHS estimates the annual cost of medical monitoring and treatment to be provided and administrative expenses of this regulatory action in millions of dollars as presented in Table 1, below. The WTC Health Program has recently conducted rulemaking to add certain types of cancer to the List of WTC-Related Health Conditions in 42 CFR 88.1 (77 FR 56138, September 12, 2012). The cost of treating and monitoring

[10] Please note that Section 3311(a)(5) of the PHS Act states that no individual who is determined to be a positive match to the terrorist watch list maintained by the Federal government shall qualify to become a WTC responder or screening-eligible or certified-eligible survivor.

[11] WTC Health Program application for Pentagon and Shanksville responders will be available on the Program's Web site at *http://www.cdc.gov/wtc/apply.html.*

[12] The List of WTC-Related Health Conditions can be found on the Program Web site at *http://www.cdc.gov/wtc/faq.html.*

[13] See § 3312(a)(1) of the PHS Act; 42 U.S.C. 300mm–22(a)(1).

cancers that may be certified for Pentagon and Shanksville responders is included in the analysis conducted in that rulemaking.

TABLE 1—ANNUAL HEALTHCARE AND ADMINISTRATIVE COSTS AND TRANSFERS $MILLIONS (2011$)

	Societal Costs		Transfers	
	Discounted 7 percent *	Discounted 3 percent	Discounted 7 percent	Discounted 3 percent
Administrative				
Low Estimate	$0.33			
High Estimate		$0.90		
Medical Monitoring and Treatment				
Low Estimate	$0.27		$0.73	
High Estimate		$0.80		$1.62
Total				
Low Estimate	$0.60		$0.73	
High Estimate		$1.70		$1.62

* Discount rates are used to estimate the present value of health benefits occurring in the future. (See OMB Circulars A–4 and A–94 Revised.)

Population Covered

According to published studies, up to 8,000 individuals responded to the terrorist attack at the Pentagon and approximately 1,000 responded in Shanksville, Pennsylvania.[14] For the purposes of this economic analysis, HHS estimates the total population of potential new enrollees in the WTC Health Program from the Pentagon and Shanksville sites to be 9,000 responders. In order to estimate the number and rate of Pentagon and Shanksville responders who may apply for enrollment in the WTC Health Program, HHS assumed two enrollment scenarios based on the share of uninsured responders. First, HHS assumed that of the 9,000 eligible responders, 1,467 (16.3 percent, the current National average rate of uninsured persons) [15] will be uninsured and therefore will likely apply for enrollment as soon as eligibility criteria are promulgated. Alternatively, HHS assumed that of the 9,000 responders, 540 (6 percent) will be uninsured. The 6 percent uninsured rate is derived from a study by the Urban Institute, which indicates that 97 percent of workers in public administration are insured.[16] For the purposes of this analysis, HHS further assumed that most public agencies (Federal, state, and local) involved in these responses similarly offer health insurance to employees, that retention rates for public sector employment tend to be high, and that disability insurance and health insurance among retired public employees are also likely to be high. To account for uncertainty regarding the impact on insurance rates of retention, disability, and retirements among public employee responders involved in these responses, as well as uncertainty regarding the quotient of volunteer responders who were not public employees, we doubled the uninsured rate of 3 percent documented in the Urban Institute study to 6 percent. HHS further assumed that 1.3 percent of the remaining unenrolled population will enroll on an annual basis thereafter. This percentage is based on the current rate at which individuals who responded to or survived the terrorist attacks in New York City are enrolling in the WTC Health Program.

Cost Estimates

Using data from the Program's operational experience to date (since July 1, 2011), HHS has estimated costs for administrative activities and medical monitoring and treatment, and has estimated related rates of enrollment and certification of individuals who responded at the Pentagon or in Shanksville. The analyses of WTC Health Program costs use a low estimate reflecting actual costs associated with maintaining the existing program plus additional administrative activities, and a higher estimate level that assumes increases in both administrative costs and other health care costs.

As discussed above, the WTC Health Program expects to initially enroll a minimum of 540 and a maximum of 1,467 Pentagon and Shanksville, Pennsylvania responders in 2013 and between 97 and 110 additional new enrollees over the course of the first year. HHS assumes that there will be between 97 and 109 new enrollees in 2014, between 95 and 107 in 2015, and between 94 and 106 in 2016.

- Administrative Costs

HHS estimates administrative costs ranging between $326,519 and $900,565 annually, covering program management, enrollment of Pentagon and Shanksville responders, certification of WTC-related health conditions, authorization of medical care, payment services, administration of appeals processes, and education and outreach. The range of the costs estimated reflects uncertainty associated with levels of activity for enrollment, appeals, and competitively established costs for contractual administrative services. All administrative costs are counted as societal costs.

- Costs of Medical Monitoring

New enrollees are eligible for an initial medical examination. The costs per patient are estimated between $650 and $1,032 per individual. The low estimate is based on the average costs

[14] Goldberg A, Papadopoulos S, Putney D, Berlage N, Welch R [2007]. Pentagon 9/11. Washington, DC: Historical Office, Office of the Secretary of Defense. *http://osdhistory.defense.gov/history.html.* Accessed January 2012.

The George Washington University, Institute for Crisis, Disaster, and Risk Management. The University of Pittsburgh. Observing and Documenting the Inter-Organizational Response to the September 11th Attack on the Pentagon: Activities and Findings. Research Supported by National Science Foundation Grant CMS–013909.

Grant NK, Hoover DH, Scarisbrick-Hauser AM, Muffet SL [2003]. The Crash of United Flight 93 in Shanksville, Pennsylvania. In Natural Hazards Research and Applications Information Center, Public Entity Risk Institute, and Institute for Civil Infrastructure Systems, Beyond September 11th: An Account of Post-Disaster Research. Special Publication No. 39. Boulder, Colorado: Natural Hazards Research and Applications Information Center, University of Colorado.

[15] U.S. Census Bureau [2011]. Current Population Survey. *http://www.census.gov/hhes/www/cpstables/032011/health/h05_000.xls.* Accessed July 10, 2012.

[16] The Urban Institute. Garrett B, Nichols L, and Greenman E [2001]. Workers Without Health Insurance: Who Are they and How Can Policy Reach Them? A Series of Community Voices Publications.

for patients currently enrolled in the WTC Health Program serviced by the nationwide provider network.[17] The high estimate is based on the services if all tests were conducted and billed at the Federal Employees Compensation Act (FECA) rates for Washington, DC.[18]

These projections assume 35 percent of enrolled responders will obtain annual monitoring examinations, which is the average participation rate for WTC responders in the current Program. The monitoring exams are provided only in the years following the initial medical exam. All monitoring costs incurred in 2013 are counted as societal costs because the population basis assumed that the initial influx of new enrollees will be uninsured, and that an additional 97 to 110 new responders will be added over the course of the year. All medical costs incurred in 2014 through 2016 are counted as transfers.

• Costs of Medical Treatment

The estimated costs for medical treatment are based on an average cost in the WTC Health Program. HHS estimates the cost of treatment to be $3,500 per patient. The estimate is based on the average costs for patients currently enrolled in the WTC Health Program serviced by the nationwide provider network. HHS has no quantitative basis to estimate a different rate of medical treatment utilization for this population as compared to the New York City WTC responders. Therefore, as was done in the July 2011 economic analysis, HHS assumes that 29 percent of future enrolled WTC responders will receive treatment annually. The range of average per patient costs is based on the average costs for patients having received treatment through the WTC Health Program. HHS assumes that in 2013 the initial influx of Pentagon and Shanksville enrollees who receive medical treatment in the WTC Health Program will not have medical insurance provided by employer, private sources, Medicare, or Medicaid; thereafter, HHS assumes that an additional 97 to 110 responders would enroll throughout the year. HHS assumes that all of the enrollees who receive medical treatment will have access to medical insurance in 2014 and beyond when the provisions of the Affordable Care Act are implemented. Therefore, all treatment costs occurring in 2014 and beyond are counted as transfers.

A summary of annual WTC Health Program costs associated with this rulemaking is presented in Table 2 below.

TABLE 2—SUMMARY OF MEDICAL MONITORING AND TREATMENT (IN $2011)

Pentagon & Shanksville Responders	2013	2014	2015	2016
Total Number of WTC Health Program Enrollees				
Low	650	759	866	971
High	1,565	1,662	1,757	1,851
Initial Medical Examination				
New Enrollees				
Low	650	109	107	106
High	1,565	97	95	94
Total Undiscounted Cost of Initial Health Evaluation				
Low Estimate=$650 per person	$422,500	$70,600	$69,600	$68,700
High Estimate = $1,032 per person	1,615,000	99,700	98,500	97,200
Annual Medical Monitoring				
35% of All Enrollees, (1-year lag)				
Low	.....	227	265	303
High	.....	548	582	615
Total Undiscounted Cost of Annual Evaluation				
Low Estimate = $650 per person	.....	147,900	172,600	196,900
High Estimate = $1,032 per person	.....	565,300	600,200	634,600
Medical Treatment				
29% of All Enrollees				
Low	188	220	251	282
High	454	482	510	537
Total Undiscounted Cost of Medical Treatment				
Low Estimate	659,700	769,900	878,700	986,000
High Estimate	1,588,400	1,686,500	1,783,300	1,878,900
Initial Medical Examination, Monitoring, and Treatment Total				
Low Estimate	1,082,200	988,300	1,120,900	1,251,700
High Estimate	3,203,400	2,351,500	2,482,000	2,610,700

[17] The nationwide provider network is the system of healthcare providers that provides medical monitoring and treatment to WTC Health Program responders and survivors who live outside of the New York City area. Although a Pentagon responder enrolled in the WTC Health Program may be evaluated, diagnosed, and/or treated at a Clinical Center of Excellence (New York-based, WTC Health Program providers), this analysis presumes that all enrollees will visit local providers in the nationwide network.

[18] Section 3312(c)(1)(A) of the PHS Act requires the Administrator to base treatment costs on the relevant Federal Employees Compensation Act rates. See 5 U.S.C. 8101 *et seq.,* 20 CFR part 20.

Benefits

Although we cannot quantify the benefits associated with the WTC Health Program, enrollees with a WTC-related health condition are expected to experience a higher quality of care than they would in the absence of the Program. Mortality and morbidity improvements for patients expected to enroll in the WTC Health Program are anticipated because barriers may exist to access and delivery of quality health care services in the absence of the services provided by the WTC Health Program. HHS anticipates benefits to patients treated through the WTC Health Program, who may otherwise not have access to health care services, to accrue in 2013. Starting in 2014, continued implementation of the Affordable Care Act will result in increased access to health insurance and improved health care services for the general responder and survivor population that currently is uninsured.

B. Regulatory Flexibility Act

The Regulatory Flexibility Act (RFA), 5 U.S.C. 601 *et seq.,* requires each agency to consider the potential impact of its regulations on small entities including small businesses, small governmental units, and small not-for-profit organizations. HHS believes that this rule has ''no significant economic impact upon a substantial number of small entities'' within the meaning of the RFA.

Because no small businesses are impacted by this rulemaking, HHS certifies that this rule will not have a significant economic impact on a substantial number of small entities within the meaning of the RFA. Therefore, a regulatory flexibility analysis as provided for under RFA is not required.

C. Paperwork Reduction Act

Under the Paperwork Reduction Act of 1995 (44 U.S.C. 3501 *et seq.*), a Federal agency shall not conduct or sponsor a collection of information from 10 or more persons other than Federal employees unless the Director of the Office of Management and Budget (OMB) has approved the proposed collection of information. A person is not required to respond to a collection of information unless it displays a currently valid OMB control number.

HHS has determined that this interim final rule contains information collection and record keeping requirements that are subject to review by OMB. This interim final rule will result in additional responses and burden hours associated with an existing information collection (World Trade Center Health Program Enrollment, Appeals & Reimbursement, OMB Control Number 0920–0891, current expiration date 12/31/2014). In order to account for those increases in responses and burden without delay, HHS is requesting emergency review and clearance for a new information collection specifically for Pentagon and Shanksville responders. A description of the relevant regulatory provisions is given below with an estimate of the annual reporting burden. Included in the estimate of the annual reporting burden is the time for reviewing instructions, searching existing data sources, gathering and maintaining the data needed, and completing and reviewing each collection of information. In compliance with the requirement of section 3506(c)(2)(A) of the PRA for opportunity for public comment on proposed data collection projects, CDC will publish periodic summaries of proposed projects. To request more information on the proposed projects or to obtain a copy of the data collection plans and instruments, you may call 404–639–5960; send comments to Kimberly S. Lane, 1600 Clifton Road, MS–D74, Atlanta, GA 30333; or send an email to *omb@cdc.gov.*

Comments are invited on the following: (a) Whether the proposed collection of information is necessary for the proper performance of the functions of the Agency, including whether the information shall have practical utility; (b) the accuracy of the Agency's estimate of the burden of the proposed collection of information; (c) ways to enhance the quality, utility, and clarity of the information to be collected; and (d) ways to minimize the burden of the collection of information on respondents. Written comments should be received within 30 days of the publication of this notice.

Proposed Project: World Trade Center Health Program Enrollment, Appeals & Reimbursement for Pentagon and Shanksville Responders—New—National Institute for Occupational Safety and Health, Centers for Disease Control and Prevention.

Background and Brief Description: Title XXXIII of the PHS Act as amended establishes the WTC Health Program within HHS. The Program provides medical monitoring and treatment benefits to responders to the September 11, 2001, terrorist attacks in New York City, at the Pentagon, and in Shanksville, Pennsylvania, and to survivors of the terrorist attacks in New York City. Title XXXIII requires that various Program provisions be established by regulation, including eligibility criteria for responders at the Pentagon and in Shanksville, Pennsylvania.

This interim final rule revises the data collection requirements that have been approved by OMB under OMB Control Number 0920–0891, with an expiration date of 12/31/2014. The addition of eligible respondents resulting from this interim final rule will increase the number of respondents and burden associated with the following provisions of 42 CFR part 88:

Section 88.5 Application process—status as a WTC responder. This section informs applicants (1,605 respondents) who believe they meet the eligibility criteria for a WTC responder how to apply for enrollment in the WTC Health Program and describes the types of documentation the WTC Program Administrator will accept as proof of eligibility. We estimate that the application process will take an average of 30 minutes.

Section 88.11 Appeals regarding eligibility determination—responders and survivors. This section establishes the process for appeals regarding eligibility determinations. Of those Pentagon and Shanksville responders expected to apply for enrollment in the Program (1,605), HHS expects that 2.5 percent (40) will fail due to ineligibility. HHS further assumes that 10 percent of those individuals (4 respondents) will appeal the decision. We estimate that the appeals letter will take no more than 30 minutes.

Section 88.15 Appeals regarding treatment. This section establishes the timeline and process to appeal the Administrator's determinations regarding treatment decisions. HHS estimates that Program participants will request certification for 874 health conditions each year. Of those 874, we expect that 1 percent (<1) will be denied certification by the WTC Program Administrator. We further expect that such a denial will be appealed 95 percent of the time. Of the projected 454 enrollees who will receive medical care, based on current Program data it is estimated that 3 percent (14) will appeal decisions of unnecessary treatment. We estimate that the appeals letter will take no more than 30 minutes.

Section 88.16 Reimbursement for medically necessary treatment, outpatient prescription pharmaceuticals, monitoring, initial health evaluations, and travel expenses. This section establishes the process by which a member of the Clinical Centers of Excellence or the nationwide provider network will be reimbursed by the WTC Health Program for the cost of

medical treatment and outpatient prescription pharmaceuticals, and a WTC responder may be reimbursed for certain transportation expenses.

Standard U.S. Treasury form SF 3881 (OMB No. 1510–0056) will be used to gather necessary information from Program healthcare providers so that they can be reimbursed directly from the Treasury Department. HHS expects that approximately 5 providers and provider groups will submit SF 3881, which is estimated to take 15 minutes to complete. Providers will submit only one SF 3881.

Pharmacies will electronically transmit reimbursement claims to the WTC Health Program. HHS estimates that 4 pharmacies will submit reimbursement claims for 1,058 prescriptions per year, or 265 per pharmacy; we estimate that each submission will take 1 minute.

WTC responders who travel more than 250 miles to a nationwide network provider for medically necessary treatment may be provided necessary and reasonable transportation and other expenses. These individuals may submit a travel refund request form, which should take respondents 10 minutes to complete. HHS expects no more than 1 claim per year.

The reporting and record keeping requirements contained in these regulations are used by NIOSH to carry out its responsibilities related to the implementation of the WTC Health Program as required by law. The burdens imposed have been reduced to the absolute minimum considered necessary to permit NIOSH to carry out the purpose of the legislation, *i.e.,* to implement the WTC Health Program. This emergency data collection is warranted because it is essential that individuals who wish to be enrolled, apply to the WTC Health Program, appeal a determination made by the WTC Program Administrator, or submit a claim for reimbursement have the opportunity to do so as soon as the eligibility criteria are established upon the effective date of this interim final rule.

This new information collection request is for 832.5 annual burden hours.

Section	Title	Number of respondents	Responses per respondent	Average burden per response (min)	Total burden (hr)
88.5	Application process—status as a WTC responder (Pentagon and Shanksville).	1,605	1	30/60	803
88.11	Appeals regarding eligibility determinations	4	1	30/60	2
88.15	Appeals regarding treatment	14	1	30/60	7
88.15	Appeals regarding certification of health conditions	1	1	30/60	.5
88.16	Reimbursement for:	5	1	15/60	*1.5
	Medically necessary treatment, monitoring, initial health evaluations.				
	Outpatient prescription pharmaceuticals	4	265	1/60	18
	Travel expenses	1	1	10/60	*.5
Total					832.5

*These values are rounded up to the nearest half-hour.

D. Small Business Regulatory Enforcement Fairness Act

As required by Congress under the Small Business Regulatory Enforcement Fairness Act of 1996 (5 U.S.C. 801 *et seq.*), the Department will report the promulgation of this rule to Congress prior to its effective date.

E. Unfunded Mandates Reform Act of 1995

Title II of the Unfunded Mandates Reform Act of 1995 (2 U.S.C. 1531 *et seq.*) directs agencies to assess the effects of Federal regulatory actions on State, local, and tribal governments, and the private sector ''other than to the extent that such regulations incorporate requirements specifically set forth in law.'' For purposes of the Unfunded Mandates Reform Act, this rule does not include any Federal mandate that may result in increased annual expenditures in excess of $100 million by State, local or tribal governments in the aggregate, or by the private sector. For 2012, the inflation adjusted threshold is $139 million.

F. Executive Order 12988 (Civil Justice)

This rule has been drafted and reviewed in accordance with Executive Order 12988, ''Civil Justice Reform,'' and will not unduly burden the Federal court system. This rule has been reviewed carefully to eliminate drafting errors and ambiguities.

G. Executive Order 13132 (Federalism)

The Department has reviewed this rule in accordance with Executive Order 13132 regarding federalism and has determined that it does not have ''federalism implications.'' The rule does not ''have substantial direct effects on the States, on the relationship between the national government and the States, or on the distribution of power and responsibilities among the various levels of government.''

H. Executive Order 13045 (Protection of Children From Environmental Health Risks and Safety Risks)

In accordance with Executive Order 13045, HHS has evaluated the environmental health and safety effects of this rule on children. HHS has determined that the rule would have no environmental health and safety effect on children.

I. Executive Order 13211 (Actions Concerning Regulations that Significantly Affect Energy Supply, Distribution, or Use)

In accordance with Executive Order 13211, HHS has evaluated the effects of this rule on energy supply, distribution or use, and has determined that the rule will not have a significant adverse effect.

J. Plain Writing Act of 2010

Under Public Law 111–274 (October 13, 2010), executive Departments and Agencies are required to use plain language in documents that explain to the public how to comply with a requirement the Federal Government administers or enforces. HHS has attempted to use plain language in promulgating the proposed rule consistent with the Federal Plain Writing Act guidelines.

List of Subjects in 42 CFR Part 88

Aerodigestive disorders, Appeal procedures, Health care, Mental health conditions, Musculoskeletal disorders, Respiratory and pulmonary diseases.

Text of the Rule

For the reasons discussed in the preamble, the Department of Health and Human Services amends 42 CFR part 88 as follows:

PART 88—WORLD TRADE CENTER HEALTH PROGRAM

■ 1. The authority citation for part 88 continues to read as follows:

Authority: 42 U.S.C. 300mm–300mm–61, Pub. L. 111–347, 124 Stat. 3623.

■ 2. Amend § 88.1 by adding the definitions of ''Pentagon site,'' ''police department,'' and ''Shanksville, Pennsylvania site,'' in alphabetical order, to read as follows:

§ 88.1 Definitions.

* * * * *

Pentagon site means any area of the land (consisting of approximately 280 acres) and improvements thereon, located in Arlington, Virginia, on which the Pentagon Office Building, Federal Building Number 2, the Pentagon heating and sewage treatment plants, and other related facilities are located, including various areas designated for the parking of vehicles, vehicle access, and other areas immediately adjacent to the land or improvements previously described that were affected by the terrorist-related aircraft crash on September 11, 2001; and those areas at Fort Belvoir in Fairfax County, Virginia and at the Dover Port Mortuary at Dover Air Force Base in Delaware involved in the recovery, identification, and transportation of human remains for the incident.

Police department means any law enforcement department or agency, whether under Federal, state, or local jurisdiction, responsible for general police duties, such as maintenance of public order, safety, or health, enforcement of laws, or otherwise charged with prevention, detection, investigation, or prosecution of crimes.

* * * * *

Shanksville, Pennsylvania site means the property in Stonycreek Township, Somerset County, Pennsylvania, which is bounded by Route 30 (Lincoln Highway), State Route 1019 (Buckstown Road), and State Route 1007 (Lambertsville Road); and those areas at the Pennsylvania National Guard Armory in Friedens, Pennsylvania involved in the recovery, identification, and transportation of human remains for the incident.

■ 3. Amend § 88.4 by adding paragraphs (b) and (c) to read as follows:

§ 88.4 Eligibility criteria—status as a WTC responder.

* * * * *

(b) Responders to the Pentagon site of the September 11, 2001, terrorist attacks, may apply for enrollment in the WTC Health Program on or after April 29, 2013. Individuals must meet the criteria below to be considered eligible for enrollment:

(1) The individual was an active or retired member of a fire or police department (fire or emergency personnel), worked for a recovery or cleanup contractor, or was a volunteer; and

(2) Performed rescue, recovery, demolition, debris cleanup, or other related services at the Pentagon site of the September 11, 2001, terrorist attacks, for at least 1 day beginning September 11, 2001, and ending on November 19, 2001.

(c) Responders to the Shanksville, Pennsylvania site of the September 11, 2001, terrorist attacks, may apply for enrollment in the WTC Health Program on or after April 29, 2013. Individuals must meet the criteria below to be considered eligible for enrollment:

(1) The individual was an active or retired member of a fire or police department (fire or emergency personnel), worked for a recovery or cleanup contractor, or was a volunteer; and

(2) Performed rescue, recovery, demolition, debris cleanup, or other related services at the Shanksville, Pennsylvania site of the September 11, 2001, terrorist attacks, for at least 1 day beginning September 11, 2001, and ending on October 3, 2001.

* * * * *

Dated: October 2, 2012.

John Howard,

Administrator, World Trade Center Health Program and Director, National Institute for Occupational Safety and Health, Centers for Disease Control and Prevention, Department of Health and Human Services.

[FR Doc. 2013–07146 Filed 3–27–13; 8:45 am]

BILLING CODE 4163–18–P

DEPARTMENT OF DEFENSE

Defense Acquisition Regulations System

48 CFR Parts 215 and 252

RIN 0750–AH47

Defense Federal Acquisition Regulation Supplement: Proposal Adequacy Checklist (DFARS Case 2011–D042)

AGENCY: Defense Acquisition Regulations System, Department of Defense (DoD).

ACTION: Final rule.

SUMMARY: DoD is issuing a final rule amending the Defense Federal Acquisition Regulation Supplement (DFARS) to incorporate a proposal adequacy checklist for proposals in response to solicitations that require submission of certified cost or pricing data.

DATES: *Effective Date:* March 28, 2013

FOR FURTHER INFORMATION CONTACT: Mr. Dustin Pitsch, telephone 571–372–6090.

SUPPLEMENTARY INFORMATION:

I. Background

DoD published a proposed rule in the **Federal Register** at 76 FR 75512 on December 2, 2011, to incorporate the requirement for a proposal adequacy checklist into DFARS 215.408, and an associated solicitation provision at 252.215–7009, to ensure offerors take responsibility for submitting thorough, accurate, and complete proposals. Fifteen respondents submitted public comments in response to the proposed rule.

II. Discussion and Analysis of the Public Comments

DoD reviewed the public comments in the development of the final rule. A discussion of the comments and the changes made to the rule as a result of those comments is provided, as follows:

A. Summary of significant changes from the proposed rule.

• The sentence ''Completion of this checklist in no way reduces the responsibility to fully comply with all of the requirements of 41 U.S.C. chapter 35, Truthful Cost or Pricing Data, and any other special requirements of the solicitation.'' is removed from the checklist instructions at DFARS 252.215–7009.

• The sentence ''In preparation of the offeror's checklist, offerors may elect to have their prospective subcontractors use the same or similar checklist as appropriate.'' was added to the end of

the checklist instructions at DFARS 252.215–7009. The following checklist items are referred to by their proposed rule numbering scheme:

- Checklist item 2 is modified to change the word ''lending'' to ''accountable''.
- Checklist item 3 is modified to read ''Does the proposal identify and explain notifications of noncompliance with CASB or CAS; any proposal inconsistencies with your disclosed practices or applicable CAS; and inconsistencies with your established estimating and accounting principles and procedures?''
- Checklist item 4 is modified to read ''Does the proposal disclose any other known activity that could materially impact the costs?'' and now includes the list of eight sample factors that appear in the definition of ''cost or pricing data'' at FAR 2.101. The reference column is updated to add FAR 2.101, ''Cost or pricing data''.
- Checklist item 9 is revised in response to public comments to provide a different reference.
- Checklist item 10 has added the phrase ''including breakdown by year'' after ''consistent with your cost accounting system''.
- Checklist items 11 and 13 are removed in response to public comments and are covered by final rule item 10, as revised.
- Checklist item 14 is removed in response to public comments and final rule checklist item 4 was modified to include that non-recurring costs should be noted in the proposal along with other known activity that could materially impact costs.
- Checklist item 16 (final rule item 13) is modified to read ''Is there a Government forward pricing rate agreement (FPRA)? If so, the offeror shall identify the official submittal of such rate and factor data.'' Checklist item 33 from the proposed rule, has been revised and combined with final rule item 13, to address the proposal requirements if there is no FPRA.
- Checklist item 17 is removed in response to public comments.
- Checklist item 18 (final rule item 14) is modified to note that a consolidated summary of individual material and services is ''frequently referred to as a Consolidated Bill of Materials (CBOM)''.
- Checklist item 19 (final rule item 15) is modified to read ''Has the offeror identified in the proposal those subcontractor proposals, for which the contracting officer has initiated or may need to request field pricing analysis?'' and to add the reference ''DFARS 215.404–3.''
- Checklist item 20 (final rule item 16) is modified to remove ''proposal(s)'' and add ''certified cost or pricing data''.
- Checklist item 21 (final rule item 17) is combined with checklist item 22 and modified to read ''Is there a Price/Cost Analysis establishing the reasonableness of each of the proposed subcontracts included with the proposal? If the offeror's price/cost analyses are not provided with the proposal, does the proposal include a matrix identifying dates for receipt of subcontractor proposal, completion of fact finding for purposes of price/cost analysis, and submission of the price/cost analysis?''
- The sections of the checklist titled ''COMMERCIAL ITEM DETERMINATION'' and ''ADEQUATE PRICE COMPETITION'' are now titled ''EXCEPTIONS TO CERTIFIED COST OR PRICING DATA.''
- Checklist item 23 (final rule item 18) is modified to read ''Has the Offeror submitted any exceptions to the submission of certified cost or pricing data for commercial items proposed either at the prime or subcontractor level, in accordance with provision 52.215–20?'' and now contains a list of the questions from items 24 through 26. The reference column is updated to read ''FAR 52.215–20'' And ''FAR 2.101, commercial item.''
- Checklist item 27 (final rule item 19) is modified to read ''Does the proposal include a price analysis for all commercial items offered that are not available to the general public?''
- Checklist item 32 (final rule item 24) is modified to read ''For labor Basis of Estimates, does the proposal include labor categories, labor hours, and task descriptions, (e.g.; Statement of Work reference, applicable CLIN, Work Breakdown Structure, rationale for estimate, applicable history, and time-phasing)?''
- Checklist item 33 is removed and relocated within final rule item 13 in response to public comments.
- Checklist item 35 (final rule item 26) is modified to add ''and how they are applied.''
- Checklist item 43 is removed in response to public comments.
- Checklist item 44 (final rule 34) is revised in response to public comments to provide a different reference in the reference column and to address all types of economic price adjustments, not just those based on indices.
- Checklist item 45 (final rule item 35) is modified to read ''If the offeror is proposing Performance-Based Payments did the offeror comply with FAR clause 52.232–28?'' and the reference is updated to read ''FAR 52.232–28.''
- Checklist item 47 is removed in response to public comments.

B. Analysis of Public Comments.

1. Increased Cost

Comment: Two respondents stated that this new rule would result in increased costs that will ultimately be passed on to the Government and may be financially prohibitive to seeking other business.

Response: This provision results from a long history of incomplete proposals resulting in rework and lost time, and it aims to achieve cost savings by improving initial proposal submissions from contractors.

2. Improved Efficiency

Comment: One respondent noted that the checklist will improve efficiency on both sides of the contract and that DOD will save time because they will have all the answers they need to determine which contractor is best for the Government.

Response: This comment accurately expresses the goals of this rule.

3. Paperwork Reduction Act

Comment: Several respondents believed that this checklist imposes additional reporting requirements on the contractor and note that many of the checklist items are not currently required for submission of certified cost or pricing data. One respondent noted that while this checklist adds the new requirements it appears to add no value to the contracting process.

Response: This rule does not impose additional requirements over what is already required under the conditions where certified cost or pricing data are required and these requirements are already covered by OMB Control Number 9000–0013. This provision is applicable to solicitations with an estimated value greater than the TINA threshold and that require certified cost or pricing data. This provision intends to increase uniformity across DoD, minimize local variations, and thereby decrease proposal preparation costs.

4. Unnecessary and Duplicative

Comment: Several respondents suggested that the checklist is unnecessary and duplicative. One respondent noted that it is the offeror's responsibility to comply with the requirements of the solicitation and an offeror that is unable to submit a compliant proposal is likely to be noncompliant after award. The same respondent noted that this checklist is somewhat duplicative of the DCAA forward pricing adequacy checklist. Another noted that most of the checklist

items already appear in FAR 15.408 at table 15–2 and suggested that the rule should require contractors confirm that their proposal complies with all applicable requirements of 15–2. Another respondent noted that this rule is: (1) Not compliant with Executive Order 12866 as there is no defined problem that this rule aims to solve; (2) the rule is inconsistent, incompatible and duplicative of what is already in Table 15–2; and (3) that this checklist only adds a layer of regulatory requirements.

Response: This provision is a single, uniform tool that is applicable across DoD to address the inconsistent interpretations of Table 15–2. The intent of this provision is to increase uniformity across DoD, minimize local variations, and thereby decrease proposal preparation costs. The checklist created by this rule is a DFARS provision; any checklist that DCAA currently uses is outside the scope of this rule.

5. Belongs in Procedures, Guidance, and Information (PGI)

Comment: Several of the respondents suggested that this checklist should be incorporated into the DFARS PGI as it seems that it is intended to be a tool for assisting contracting officers in determining the adequacy of proposal and not a regulatory requirement.

Response: This provision impacts contractors; therefore it must be in the DFARS. Language added to the DFARS PGI cannot have any effect on the public and exists to assist contracting officers.

6. Better Buying Power (BBP)

Comment: Several respondents stated that the proposed rule does not support the BBP Initiative and noted that the rule does not align with any of the 23 principal actions. The respondents believed that the proposed rule is contrary to the BBP Initiative to reduce nonproductive processes and bureaucracy.

Response: While this initiative predates BBP, it is consistent with the BBP's cost reduction initiatives.

7. Self validation

Comment: Several comments were received regarding the possibility of contractors self validating their proposal through the use of the checklist. The respondents noted that: (1) The contractor has always been responsible for meeting the requirements of the solicitation; (2) use of the checklist will not relieve the contracting officers of the responsibility of determining the proposal adequate; and (3) it is likely that time and resources will be wasted reviewing the checklist instead of reviewing the proposal.

Response: This provision should result in cost savings by improving initial proposal submissions from offerors and reduce the amount of rework and resubmissions. Because the offeror will specify where to find required information in its proposal, this provision aims to achieve time savings for contracting officers.

8. Protest potential

Comment: One respondent suggested that this rule creates additional potential for protests as acceptance of the checklist or the non-rejection of the checklist would allow contractors to claim they have met all solicitation requirements and were unfairly denied award.

Response: This checklist is intended to facilitate the contractor submitting an adequate proposal. The checklist is not intended to be a standalone decision document; it will be used by contracting officials in reviewing proposals when certified cost or pricing data are required.

9. Require Checklist (Shall/Should)

Comment: One respondent suggested changing the clause prescription at 215.408(3) to read that the contracting officer ''shall'' use the checklist instead of ''should'' as is used in the proposed rule. This respondent believed that nonstandard mandatory use of the checklist will cause confusion across the DoD and industry.

Response: Because of the wide variance in requirements, the contracting officer will have discretion to determine applicability to the requirements.

10. Corrective Actions

Comment: Two respondents suggested that there should be penalties associated with non-submission of the checklist.

Response: The checklist is intended to be a tool to assist contractors to provide adequate, compliant proposals; it is not meant to be punitive. Non-receipt of the checklist may result in extending the proposal evaluation and delaying contract award.

11. Contracting Officer Determination

Comment: One respondent suggested that the contracting officer should specify which items on the checklist will be required and where data other than certified cost or pricing data are required.

Response: This provision is to be included only in solicitations requiring certified cost or pricing data.

12. Tailoring

Comment: One respondent suggested that the contracting officer should be able to tailor the checklist as necessary to each acquisition.

Response: The solicitation provision will be utilized in its entirety. This is a tool for offerors to improve the initial proposal submission, ensuring adequacy and completeness.

13. Subcontractor Flowdown

Comment: Several comments were received regarding the applicability of the checklist to subcontractors as the proposed rule has no guidance on this. One of the respondents noted that flowdown to require subcontractor to use the checklist would add a significant amount of time to proposal preparation.

Response: The checklist is not required to flow down to subcontractors, but prime contractors may elect to use it for their prospective subcontractors' proposals.

14. Solicitation Process Changes

Comment: One respondent made several suggestions toward the overall solicitation process including: (1) Not allowing proposal costs to be billed directly if the proposal is inadequate; (2) requiring contractors to justify their proposed fee with a risk analysis; (3) requiring, for all proposal modifications, a total proposal resubmission; (4) requiring more detail in contractor's analysis of subcontractor proposals; and (5) creating a requirement that postaward subcontractor cost savings should be passed on to the Government.

Response: These comments are beyond the scope of this rule.

15. Section L

Comment: One respondent stated that many of the checklist items are already called out in section L of the solicitation and suggested that section L could be modified to reflect the pertinent items in the checklist.

Response: The solicitation provision created by this rule will go in section L of the solicitation, and it is meant to supplement the other instructions for circumstances where certified cost or pricing data will be required.

16. Remove ''compliance'' Statement

Comment: One respondent suggested removing the ''compliance'' statement directly preceding the checklist at clause 252.215–7009.

Response: The provision is modified to remove ''Completion of this checklist in no way reduces the responsibility to fully comply with all of the requirements of 41 U.S.C. chapter 35,

Truthful Cost or Pricing Data, and any other special requirements of the solicitation.''

17. Indefinite-Delivery Indefinite-Quantity (IDIQ) Applicability

Comment: One respondent stated that the checklist is not appropriate for IDIQ solicitations and awards. The respondent stated that this is because IDIQs often provide a placeholder value or a predetermined bill of material that the offeror must use, but the checklist implies that the offeror is responsible for all of the TINA requirements for a value in the proposal that has been directed by the Government.

Response: This checklist is applicable to solicitations that require certified price and costing data. When a predetermined bill of materials is provided by the Government, certified cost or price data is not required for that cost element.

18. Certified Bill of Materials (CBOM)

Comment: One respondent stated that the Government's requirement for a CBOM is not always consistently interpreted or applied which, at times, has resulted in unnecessary costs to the Government in the name of compliance. The checklist should encourage contractors to discuss BOM requirements with the contracting officer prior to preparing the proposal where a single CBOM (in an electronic format) is not consistent with the contractor's current (and approved) practices. Further, the contracting officer should be allowed the reasonable discretion to decide what information or format is truly necessary for determining a price fair and reasonable.

Response: The rule does not restrict communication among the parties. Specific submission requirements can be included in section L of the solicitation at the contracting officer's discretion.

19. Contractor Versus Offeror

Comment: One respondent stated that the terms ''Offeror'' and ''contractor'' should be used consistently and not interchangeably to minimize confusion.

Response: All ''contractor'' references have been changed to ''offeror'' in the DFARS text and provision.

20. CAGE and DUNS

Comment: One respondent suggested that proposals include both the CAGE and DUNS numbers of the offeror in order to more effectively monitor offeror compliance with forward pricing rate recommendations and forward pricing rate agreements.

Response: This is outside the scope of this rule; it is already required by the solicitation.

21. Proposal Requirements

Comment: One respondent requested adding a question in the ''General Instructions'' to assess whether the offeror addressed the specific requirements of the contracting officer within the proposal.

Response: This checklist addresses proposals that will require certified cost or pricing data. Specific submission requirements can be included in section L of the solicitation at the contracting officer's discretion.

22. General Instructions

Comment: One respondent suggested adding under ''General Instructions'' the following three items:

a. Does the proposal comply with the RFP in regard to data rights?

b. Does the proposal comply with the RFP regarding the applicable requirements relative to submission of subcontracting plan, Cost and Software Data Reporting (DFARS 252.234–7003, 252.234–7004), EVM, Unique Item Identification (UID) and specialty metals?''

Response: This checklist applies only to the cost proposal and not the proposal in its entirety.

23. Column Heading

Comment: One respondent requested changing the format of the checklist to include a ''Y/N/N/A'' column.

Response: The checklist is designed to be open-ended. An explanation should be provided when ''not applicable.'' A column with ''Y/N/N/A'' is not necessary. If the offeror fills in the checklist with a page number(s) in the ''Proposal Page No.'' column this would denote that ''yes'' the item has been provided. If the contractor enters something in the ''If not provided EXPLAIN'' column, this would denote that the item has not been provided and there should be an explanation as to why the item has not been provided. The item not being applicable for the particular proposal can be included with the explanation as to why it has not been provided.

24. Checklist Item 1

Comment: Two respondents recommended modifying the reference block for item 1 to accurately reflect the two items being referred to in FAR table 15–2.

Response: The reference is changed to ''Paragraph A.''

25. Checklist Item 2

Comment: One respondent recommended the terminology in the checklist item for Government-furnished material/tooling/test equipment be made consistent with the FAR reference for Government property. Another respondent suggested requiring a cost impact study if Government-furnished property/material/tooling/test equipment is denied. One respondent requested replacing the term ''lending'' with ''accountable'' in order to be consistent with the FAR.

Response: The DFARS text is changed to replace the term ''lending'' with ''accountable''. A cost impact study is outside the scope of this rule.

26. Checklist Item 3

Comment: One respondent suggested changing the checklist item to ask whether the offeror has been notified of any CAS noncompliance or other estimating deficiencies that may impact the proposed price. Another respondent recommended requiring the offeror to evaluate the magnitude of the impact of the CAS noncompliance or deficiency on estimated costs, describe the offeror's efforts to correct the noncompliance, and propose a method of dealing with the noncompliance in the negotiated agreement. One respondent stated that no FAR references or any other FAR or DFARS clauses currently require an offeror to disclose estimating deficiencies in a proposal and this checklist item would create a new requirement for an offeror.

Response: This item is revised to read ''Does the proposal identify and explain notifications of noncompliance with CASD or CAS; any proposal inconsistencies with your disclosed practices or applicable CAS; and inconsistencies with our established estimating and accounting principles and procedures?'' to more closely align with table 15–2.

27. Checklist Item 4

Comment: One respondent stated some of the terms in the checklist were newly created for the checklist and were not directly from the requirements already in the Federal Acquisition Regulation (FAR). The respondent suggested the inclusion of new terms would cause inconsistency that may lead to confusion. The FAR reference was also questioned.

Response: This checklist item is modified to read ''Does the proposal disclose any other known activity that could materially impact the costs?'' and now includes the list of eight sample factors that appear in the definition of

''cost or pricing data'' at FAR 2.101. The reference column is updated to add FAR 2.101, ''cost or pricing data.''

28. Checklist Item 7

Comment: Two respondents stated it would be wastefully time consuming and burdensome for offerors to disclose which pages of the proposal contain a judgmental factor applied and the mathematical or other methods used in the estimate. The respondents suggested a large percentage of the pages comprising the proposal would contain such information.

Response: Having contractors identify this information prevents miscommunication and misunderstanding, and it will save time in the proposal evaluation process.

29. Checklist Item 9

Comments: One respondent stated the FAR reference was not applicable because it pertains to CLINS instead of cost estimating relationships. One respondent suggested the checklist item should include an additional requirement that the offeror explain how the cost estimating relationship (CER) is applied.

Response: This reference for the item has been change to cite Section II, Paragraphs A and B of Table 15–2. These references require the basis of estimate. CER is a basis of estimate that could be used when cost is not proposed on a discrete basis.

30. Checklist Item 10

Comment: One respondent stated the FAR reference was not applicable because it pertains to CLINS instead of cost elements.

Response: Paragraph D is referenced because it specifically requests offeror to provide cost element breakdown for each proposed line item. The checklist does not directly restate every item of table 15–2 as it is meant to be used as a tool to ensure all necessary elements have been included with the proposal.

31. Checklist Item 11

Comments: One respondent noted the FAR reference to paragraph D was not applicable. Another respondent commented the item would introduce a new requirement because paragraph D does not require a yearly breakdown by either total price or cost element.

Response: This element is removed from the checklist as it is covered by final rule item 10; breakdowns for cost elements must be consistent with the cost accounting system.

32. Checklist Item 13

Comments: One respondent noted the FAR reference to paragraph E was not applicable. Another respondent commented the item would introduce a new requirement because paragraph D does not require a yearly breakdown by either total price or cost element.

Response: This element is removed from the checklist as it is covered by final rule item 10; breakdowns for cost elements must be consistent with the cost accounting system.

33. Checklist Item 14

Comments: One respondent noted the FAR reference to paragraph E was not applicable. Another respondent commented the item would introduce a new requirement because the offeror currently does not have to segregate recurring and non-recurring costs at the CLIN/Sub-CLIN and total cost levels.

Response: This checklist item is removed as non-recurring costs are cited in the definition of ''cost or pricing data'' at FAR 2.101 and should be noted in response to checklist item 4.

34. Checklist Item 17

Comments: Several respondents stated the checklist item for a description of supplies and services addresses non-cost information and should be eliminated. The respondents commented that the checklist item would create a new reporting requirement for offerors because this is not currently a FAR or DFARS requirement.

Response: Since item 17 requests non-cost information, it is removed from the final rule. The basis on which supplies or services meet the need of the Government should be developed within the proposal.

35. Checklist Item 18 (Final Rule Item 14)

Comments: One respondent requested the language of the checklist item be expanded to inquire whether the offeror's estimating technique is appropriate and whether inter-organizational transfers are included in the Consolidated Bill of Materials. Several respondents suggested a requirement that an offeror provide an electronic version of the CBOM that can be sorted by supplier, category, quantity, unit price, extended price of parts number, and identification of commercial items. Another respondent imparted the rationale that was utilized to reach the final version of the Air Force Proposal Adequacy Checklist and cautioned expanding the scope for this checklist item.

Response: The suggested items, as well as requiring an electronic submission that can be sorted, would be new reporting requirements beyond the intent of this rule. Specific submission requirements can be included in section L of the solicitation at the contracting officer's discretion. The checklist is not intended to dictate all specific requirements for every solicitation in which it is used.

36. Checklist Item 19 (Final Rule Item 15)

Comments: Several respondents suggested additional language to inform offerors that they must still perform price and cost analysis when an assist audit has been requested on a subcontractor. One respondent suggested the checklist item be modified or eliminated because contracting officers and DCAA, not prime contractors have the authority to request assist audits of subcontractors. Another respondent requested amending the checklist item to direct the offeror to inform the contracting officer as soon as possible of the need for an assist audit resulting from proprietary data rights assertions.

Response: A reference for item 19 is added to reflect ''DFARS 215.404–3'' and the checklist item is modified to read ''Has the offeror identified in the proposal those subcontractor proposals, for which the contracting officer has initiated or may need to request field pricing analysis?''

37. Checklist Item 20 (Final Rule Item 16)

Comments: One respondent proposed the FAR reference be revised to match that of item 18. Two respondents suggested modifying the language. One suggested: ''Per the thresholds of FAR 15.404–3(c), Subcontract Pricing Considerations, does the proposal include either a copy of the applicable subcontractor's proposals or the date by which these proposals will be submitted directly from the subcontractor? If proposals are to be submitted, annotate the projected date provided of submission in 'explanation' column of this checklist.'' The other respondent suggested modifying the language to read: ''* * * does the proposal include a copy of the applicable subcontractor's certified cost or pricing data?''

Response: The item reference is revised to add ''FAR 52.244–2''. The submission item text will be modified to incorporate the second respondent's suggestion of ''* * * does the proposal include a copy of the applicable subcontractor's certified cost or pricing data?'' If the answer is ''no,'' the explanation should state how and when the data will be provided.

38. Checklist Item 21 (Final Rule Item 17)

Comments: One respondent noted the language in checklist items 21 and 22 should be consistent when addressing an offeror's price/cost analysis of subcontracts. One respondent suggested the checklist item question be modified to ask whether a prime contractor's price/cost analysis of each proposed subcontract greater than $700,000 is included in the proposal.

Response: Item 21 is modified to read ''Is there a price/cost analysis establishing the reasonableness of each of the proposed subcontracts included with the proposal?'' A price or cost analysis must be accomplished on all subcontractor proposals; there is no dollar threshold for this.

39. Checklist Item 22 (Final Rule Item 17)

Comments: One respondent stated the checklist item would create a new reporting requirement for offerors because this is not currently a FAR or DFARS clause that requires an offeror to provide a matrix of anticipated dates for the receipt of proposals from subcontractors. Other respondents recommended identifying the offeror as a prime contractor and using the language consistently when addressing an offeror's price/cost analysis of subcontracts.

Response: This is only necessary if a proposal is incomplete because the information in the preceding checklist item has not been submitted. The checklist is not generating a new reporting requirement; it is only requesting remaining proposal components submission date for adequacy. This item has been combined with the previous checklist item (item 21 which is item 16 in the final rule) to clarify that it is a follow-up that is only necessary when an analysis has not yet been submitted for each subcontract.

40. Checklist Item 23 (Final Rule Item 18)

Comments: One respondent commented the item would introduce a new requirement because it is not currently mandatory for the offeror to indicate whether commercial items would be exempt for certified cost or pricing data requirements. The respondent noted a contracting officer may require data other than certified cost or pricing data when a commercial item is being acquired. Another respondent suggested the offeror provide the rationale for commercial items listed as exempt from certified cost or pricing data requirements.

Response: This is not a new reporting requirement as this item allows the offeror to acknowledge an allowable exemption to the requirement for certified cost or pricing data at the prime or subcontractor level. The item is modified to read ''Has the Offeror submitted any exceptions to the submission of certified cost or pricing data for commercial items proposed either at the prime or subcontractor level, in accordance with provision 52.215–20?'' and now contains a bulleted list of the questions from items 24 through 26. The reference column is updated to read ''FAR 52.215–20'' and ''FAR 2.101, commercial item.''

41. Checklist Item 24

Comments: One respondent noted the FAR reference only points to the definition of a commercial item and does not reference a FAR instruction for an offeror to provide a technical description of the differences between the proposed item and the comparison item.

Response: This item is removed because the requirements at 52.215–20 are consolidated in checklist item 23 (final rule item 17) making this item redundant.

42. Checklist Item 25

Comments: One respondent commented the checklist item would create a new reporting requirement for offerors because the FAR currently states a contracting officer may require data other than certified cost or pricing data but does not require an offeror to provide such information for every proposal. Another respondent suggested including language that a minor modification must meet the definition in FAR 2.101 in order to clarify the requirements of a commercial item exemption. One respondent requested the checklist item ask the offeror to justify, in addition to classifying, the modification. Several respondents requested the replacement of the phrase ''see note below'' with language that informs the offeror modifications that do not qualify as minor under FAR 2.101 or modifications that qualify as minor where the total price of all such modifications exceed the greater of the thresholds for certified cost or pricing data or 5% of the total price of the contract are not exempt from the submission of certified cost or pricing data.

Response: This item is removed because the requirements at 52.215–20 are consolidated in checklist item 23 (final rule item 18) making this item redundant.

43. Checklist Item 26

Comments: One respondent stated the checklist item only references the definition of a commercial item and would create a new reporting requirement for offerors because this is not currently a FAR or DFARS requirement for an offeror to provide a technical description of the differences between the proposed item and the comparison item.

Response: This item is removed because the requirements at 52.215–20 are consolidated in checklist item 23 (final rule item 18) making this item redundant.

44. Checklist Item 27 (Final Rule Item 19)

Comments: Several respondents suggested additional requirements for the offeror to provide data other than certified cost or pricing data to support a determination of price reasonableness for commercial items such as data related competition, market prices, costs, etc. One respondent stated that the reference was incorrect because cost or pricing data are not required for commercial items and if such information were required, it creates a new reporting requirement for offerors because this is not currently a FAR or DFARS requirement for an offeror.

Response: The contracting officer would have to decide during discussions if other than certified cost or pricing data will be necessary. This is not a new requirement; it is a reminder that a price analysis is still required when certified cost or pricing data are not required. The FAR reference is revised to reflect ''FAR 15.408, Table 15–2, Section II Paragraph A'' and rephrased to address ''a price analysis for all commercial items offered that are not available to the general public.''

45. Checklist Item 30 (Final Rule Item 22)

Comments: One respondent suggested amending the FAR reference for the requirement to provide analysis for inter-organizational transfers.

Response: The table 15–2 reference is added to the references column in the final rule (Paragraph A(1) Section II Table 15–2).

46. Checklist Item 31 (Final Rule Item 23)

Comments: One respondent noted the importance of well referenced information regarding the types, time phasing, and WBS for direct labor so that the cost element summary can be reconciled with the basis of estimates.

Response: The checklist is intended to assist contractors in providing well referenced proposal information.

47. Checklist Item 32 (Final Rule Item 24)

Comments: One respondent noted the checklist item would impose a new requirement on offerors since the FAR reference requires a time-phased breakdown of labor hours, rates, and cost by appropriate category but does not require task descriptions, statement-of-work reference, applicable CLIN, work breakdown structure (WBS), rationale for estimate and other detailed breakdowns. Another responded reiterated the importance of well referenced information regarding the types, time phasing, and WBS for direct labor so that the cost element summary can be with reconciled with the basis of estimates.

Response: The checklist item is modified to include the list of examples ''Statement of Work reference, applicable CLIN, work breakdown structure, rationale for estimate, applicable history, and time-phasing'' in parentheses. Also, ''e.g.'' has been added at the beginning of this list to further denote that the items are merely examples.

48. Checklist Item 33 (Final Rule Item 13)

Comments: One respondent recommended relocating the content of checklist item 33 into the ''General Instructions.'' Another respondent suggested a requirement that an offeror provide historical direct labor rates for proposed labor categories if a FPRA/FPRP is not available. Ifhistorical direct labor rates are also not available the respondent requests an offeror provide marketplace analysis for the proposed labor categories.

Response: This item is relocated to the ''General Instructions'' section of the checklist and consolidated with item 16 (final rule item 13).

49. Checklist Item 35 (Final Rule Item 26)

Comments: Several respondents request including additional guidance in the checklist item so offerors more clearly explain how indirect rates are developed and applied throughout the proposal.

Response: The rule text is modified to include ''and how they are applied?''

50. Checklist Item 36 (Final Rule Item 27)

Comments: One respondent stated the language of the checklist item should be amended to distinguish when travel is proposed as a direct cost because it may not always be proposed as such and the question requirement would not be applicable. Another respondent stated the checklist item creates a new reporting requirement for offerors because this is no current FAR or DFARS requirement.

Response: The travel details listed in item 36 are not spelled out in table 15–2; however they are the necessary details to provide an adequate basis for pricing of direct travel.

51. Checklist Item 40 (Final Rule Item 31)

Comments: One respondent stated the checklist item duplicates the requirement listed in checklist item 39 which addresses cost element breakdowns of all types of proposals.

Response: The tables are represented in separate checklist items to accentuate that they are each used in different circumstances.

52. Checklist Item 41 (Final Rule Item 32)

Comments: One respondent stated the checklist item duplicates the requirement listed in checklist item 39 which addresses cost element breakdowns of all types of proposals.

Response: The tables are represented in separate checklist items to accentuate that they are each used in different circumstances.

53. Checklist Item 43

Comments: One respondent commented that the item would introduce a new requirement because the checklist item requires the offeror to state that the fee is in accordance with statutory requirements whereas the FAR reference identifies a requirement on the contracting officer to verify the fee does not exceed statutory requirements.

Response: This item is removed because the contracting officer determines if the fee is appropriate in accordance with the regulations, not the offeror.

54. Checklist Item 44 (Final Rule Item 34)

Comments: One respondent recommended the removal of item 44 in the checklist regarding the rationale and application of economic price adjustment in a proposal. The respondent noted the inclusion of the item on the checklist may encourage an offeror to propose the use of economic price adjustments, which would not be desirable to the Government because of the of the administrative burden. The respondent also stated the checklist item assumes an economic price adjustment with indices when indices are only one of the methods available. The FAR reference was also questioned.

Response: This item is revised to address all type of economic incentive arrangements and a new reference has been provided to FAR 16.203–4 and FAR 15.408 Table 15–2, Section II, Paragraphs A, B, C, and D.

55. Checklist Item 45 (Final Rule Item 35)

Comments: One respondent suggested that the checklist item should clarify that an offeror can propose a separate price for performance based payments which are negotiated after award. Another respondent stated that the checklist item creates a new reporting requirement for offerors because there is no current FAR or DFARS requirement for an offeror to provide an expenditure profile.

Response: The reference is modified to reflect FAR 52.232–28 and the item is modified to read as follows: ''If the offeror is proposing Performance-Based Payments, did the offeror comply with FAR 52.232–28?'' The provision at FAR 52.232–28 is included in solicitations when offerors are invited to propose performance based payments and the provision includes all of the necessary information for submission.

56. Checklist Item 46 (Final Rule Item 36)

Comments: One respondent suggested expanding checklist item 46 to require identification and explanation of any higher tier subcontractors rather than limiting the requirement to only subcontractors supplying the prime contractor. Another respondent recommended the FAR reference be amended to include FAR 52.215–22.

Response: References to FAR clauses 52.215–22 and 52.215–23 are added. This checklist is addressed to the offeror and not to the subcontractors. When the prime is subcontracting more than 70% of the effort, the contractor is required to disclose this in the proposal.

57. Checklist Item 47

Comments: One respondent commented the item would introduce a new requirement because the checklist item does not make reference to a current requirement within the FAR.

Response: This item is removed as point of contact data is already required by table 15–2 Section I (A)(3), which is covered by checklist item 1.

III. Executive Orders 12866 and 13563

Executive Orders (E.O.s) 12866 and 13563 direct agencies to assess all costs and benefits of available regulatory

alternatives and, if regulation is necessary, to select regulatory approaches that maximize net benefits (including potential economic, environmental, public health and safety effects, distributive impacts, and equity). E.O. 13563 emphasizes the importance of quantifying both costs and benefits, of reducing costs, of harmonizing rules, and of promoting flexibility. This is not a significant regulatory action and, therefore, was not subject to review under section 6(b) of E.O. 12866, Regulatory Planning and Review, dated September 30, 1993. This rule is not a major rule under 5 U.S.C. 804.

IV. Regulatory Flexibility Act

A final regulatory flexibility analysis has been prepared consistent with the Regulatory Flexibility Act, 5 U.S.C. 601, *et seq.,* and is summarized as follows:

This final rule amends the Defense Federal Acquisition Regulation Supplement (DFARS) to add a checklist for Department of Defense (DoD) contractors to complete under solicitations that require the submission of certified cost or pricing data and when the Contracting Officer chooses to use the provision. This rule supports DoD's Better Buying Power initiatives.

The objective of the rule is to ensure that offerors submit thorough, accurate, and complete proposals. Through filling out the checklist the contractor will be able to self validate their proposals.

No significant issues were raised by the public in response to the initial regulatory flexibility analysis.

No comments were filed by the Chief Counsel for Advocacy of the Small Business Administration in response to the rule.

The rule will apply to solicitations, for which certified cost or pricing data are required. Based on data collected in the Federal Procurement Data System for FY2008—FY2010, there are on average 905 actions per year that met the criteria where the proposal adequacy checklist could be utilized; on average 421 of those actions were with small business concerns.

No alternatives were determined; the proposal adequacy checklist was created directly from requirements already in the FAR.

V. Paperwork Reduction Act

The rule contains information collection requirements that require the approval of the Office of Management and Budget under the Paperwork Reduction Act (44 U.S.C chapter 35). However, these changes to the DFARS do not impose additional information collection requirements to the paperwork burden previously approved under OMB Control Number 9000–0013, entitled Cost or Pricing Data Exemption Information.

List of Subjects in 48 CFR Part(s) 215 and 252

Government procurement.

Kortnee Stewart,

Editor, Defense Acquisition Regulations System.

Therefore, DoD amends 48 CFR parts 215 and 252 as follows:

■ 1. The authority citation for parts 215 and 252 continues to read as follows:

Authority: 41 U.S.C. 1303 and 48 CFR Chapter 1.

PART 215—CONTRACTING BY NEGOTIATION

■ 2. Section 215.408 is amended by adding new paragraph (6) to read as follows:

215.408 Solicitation provisions and contract clauses.

* * * * *

(6) When the solicitation requires the submission of certified cost or pricing data, the contracting officer should include 252.215–7009, Proposal Adequacy Checklist, in the solicitation to facilitate submission of a thorough, accurate, and complete proposal.

PART 252—SOLICITATION PROVISIONS AND CONTRACT CLAUSES

■ 3. Add 252.215–7009 to read as follows:

252.215–7009 Proposal adequacy checklist.

As prescribed in 215.408(6), use the following provision:

Proposal Adequacy Checklist (MAR 2013)

The offeror shall complete the following checklist, providing location of requested information, or an explanation of why the requested information is not provided. In preparation of the offeror's checklist, offerors may elect to have their prospective subcontractors use the same or similar checklist as appropriate.

PROPOSAL ADEQUACY CHECKLIST

References	Submission item	Proposal page No.	If not provided EXPLAIN (may use continuation pages)
	GENERAL INSTRUCTIONS		
1. FAR 15.408, Table 15–2, Section I Paragraph A	Is there a properly completed first page of the proposal per FAR 15.408 Table 15–2 I.A or as specified in the solicitation?		
2. FAR 15.408, Table 15–2, Section I Paragraph A(7)	Does the proposal identify the need for Government-furnished material/tooling/test equipment? Include the accountable contract number and contracting officer contact information if known.		
3. FAR 15.408, Table 15–2, Section I Paragraph A(8)	Does the proposal identify and explain notifications of noncompliance with Cost Accounting Standards Board or Cost Accounting Standards (CAS); any proposal inconsistencies with your disclosed practices or applicable CAS; and inconsistencies with your established estimating and accounting principles and procedures?		
4. FAR 15.408, Table 15–2, Section I, Paragraph C(1)	Does the proposal disclose any other known activity that could materially impact the costs?		

PROPOSAL ADEQUACY CHECKLIST—Continued

References	Submission item	Proposal page No.	If not provided EXPLAIN (may use continuation pages)
FAR 2.101, ''Cost or pricing data''	This may include, but is not limited to, such factors as— (1) Vendor quotations; (2) Nonrecurring costs; (3) Information on changes in production methods and in production or purchasing volume; (4) Data supporting projections of business prospects and objectives and related operations costs; (5) Unit-cost trends such as those associated with labor efficiency; (6) Make-or-buy decisions; (7) Estimated resources to attain business goals; and (8) Information on management decisions that could have a significant bearing on costs.		
5. FAR 15.408, Table 15–2, Section I Paragraph B	Is an Index of all certified cost or pricing data and information accompanying or identified in the proposal provided and appropriately referenced?		
6. FAR 15.403–1(b)	Are there any exceptions to submission of certified cost or pricing data pursuant to FAR 15.403–1(b)? If so, is supporting documentation included in the proposal? (Note questions 18–20.)		
7. FAR 15.408, Table 15–2, Section I Paragraph C(2)(i).	Does the proposal disclose the judgmental factors applied and the mathematical or other methods used in the estimate, including those used in projecting from known data?		
8. FAR 15.408, Table 15–2, Section I Paragraph C(2)(ii).	Does the proposal disclose the nature and amount of any contingencies included in the proposed price?		
9. FAR 15.408 Table 15–2, Section II, Paragraph A or B.	Does the proposal explain the basis of all cost estimating relationships (labor hours or material) proposed on other than a discrete basis?		
10. FAR 15.408, Table 15–2, Section I Paragraphs D and E.	Is there a summary of total cost by element of cost and are the elements of cost cross-referenced to the supporting cost or pricing data? (Breakdowns for each cost element must be consistent with your cost accounting system, including breakdown by year.)		
11. FAR 15.408, Table 15–2, Section I Paragraphs D and E.	If more than one Contract Line Item Number (CLIN) or sub Contract Line Item Number (sub-CLIN) is proposed as required by the RFP, are there summary total amounts covering all line items for each element of cost and is it cross-referenced to the supporting cost or pricing data?		
12. FAR 15.408, Table 15–2, Section I Paragraph F	Does the proposal identify any incurred costs for work performed before the submission of the proposal?		
13. FAR 15.408, Table 15–2, Section I Paragraph G	Is there a Government forward pricing rate agreement (FPRA)? If so, the offeror shall identify the official submittal of such rate and factor data. If not, does the proposal include all rates and factors by year that are utilized in the development of the proposal and the basis for those rates and factors?		
COST ELEMENTS			
MATERIALS AND SERVICES			
14. FAR 15.408, Table 15–2, Section II Paragraph A	Does the proposal include a consolidated summary of individual material and services, frequently referred to as a Consolidated Bill of Material (CBOM), to include the basis for pricing? The offeror's consolidated summary shall include raw materials, parts, components, assemblies, subcontracts and services to be produced or performed by others, identifying as a minimum the item, source, quantity, and price.		

PROPOSAL ADEQUACY CHECKLIST—Continued

References	Submission item	Proposal page No.	If not provided EXPLAIN (may use continuation pages)
SUBCONTRACTS (Purchased materials or services)			
15. DFARS 215.404–3	Has the offeror identified in the proposal those subcontractor proposals, for which the contracting officer has initiated or may need to request field pricing analysis?		
16. FAR 15.404–3(c) FAR 52.244–2	Per the thresholds of FAR 15.404–3(c), Subcontract Pricing Considerations, does the proposal include a copy of the applicable subcontractor's certified cost or pricing data?		
17. FAR 15.408, Table 15–2, Note 1; Section II Paragraph A.	Is there a price/cost analysis establishing the reasonableness of each of the proposed subcontracts included with the proposal? If the offeror's price/cost analyses are not provided with the proposal, does the proposal include a matrix identifying dates for receipt of subcontractor proposal, completion of fact finding for purposes of price/cost analysis, and submission of the price/cost analysis?		
EXCEPTIONS TO CERTIFIED COST OR PRICING DATA			
18. FAR 52.215–20 FAR 2.101, "commercial item"	Has the offeror submitted an exception to the submission of certified cost or pricing data for commercial items proposed either at the prime or subcontractor level, in accordance with provision 52.215–20? a. Has the offeror specifically identified the type of commercial item claim (FAR 2.101 commercial item definition, paragraphs (1) through (8)), and the basis on which the item meets the definition? b. For modified commercial items (FAR 2.101 commercial item definition paragraph (3)); did the offeror classify the modification(s) as either— i. A modification of a type customarily available in the commercial marketplace (paragraph (3)(i)); or ii. A minor modification (paragraph (3)(ii)) of a type not customarily available in the commercial marketplace made to meet Federal Government requirements not exceeding the thresholds in FAR 15.403–1(c)(3)(iii)(B)? c. For proposed commercial items "of a type", or "evolved" or modified (FAR 2.101 commercial item definition paragraphs (1) through (3)), did the contractor provide a technical description of the differences between the proposed item and the comparison item(s)?		
19. FAR 15.408, Table 15–2, Section II Paragraph A	Does the proposal include a price analysis for all commercial items offered that are not available to the general public?		
20. FAR 15.408, Table 15–2, Section II Paragraph A(1).	Does the proposal support the degree of competition and the basis for establishing the source and reasonableness of price for each subcontract or purchase order priced on a competitive basis exceeding the threshold for certified cost or pricing data?		
INTERORGANIZATIONAL TRANSFERS			
21. FAR 15.408, Table 15–2, Section II Paragraph A.(2).	For inter-organizational transfers proposed at cost, does the proposal include a complete cost proposal in compliance with Table 15–2?		
22. FAR 15.408, Table 15–2, Section II Paragraph A(1).	For inter-organizational transfers proposed at price in accordance with FAR 31.205–26(e), does the proposal provide an analysis by the prime that supports the exception from certified cost or pricing data in accordance with FAR 15.403–1?		

PROPOSAL ADEQUACY CHECKLIST—Continued

References	Submission item	Proposal page No.	If not provided EXPLAIN (may use continuation pages)
DIRECT LABOR			
23. FAR 15.408, Table 15–2, Section II Paragraph B	Does the proposal include a time phased (i.e.; monthly, quarterly) breakdown of labor hours, rates and costs by category or skill level? If labor is the allocation base for indirect costs, the labor cost must be summarized in order that the applicable overhead rate can be applied.		
24. FAR 15.408, Table 15–2, Section II Paragraph B	For labor Basis of Estimates (BOEs), does the proposal include labor categories, labor hours, and task descriptions—(e.g.; Statement of Work reference, applicable CLIN, Work Breakdown Structure, rationale for estimate, applicable history, and time-phasing)?		
25. FAR subpart 22.10	If covered by the Service Contract Labor Standards statute (41 U.S.C. chapter 67), are the rates in the proposal in compliance with the minimum rates specified in the statute?		
INDIRECT COSTS			
26. FAR 15.408, Table 15–2, Section II Paragraph C	Does the proposal indicate the basis of estimate for proposed indirect costs and how they are applied? (Support for the indirect rates could consist of cost breakdowns, trends, and budgetary data.)		
OTHER COSTS			
27. FAR 15.408, Table 15–2, Section II Paragraph D	Does the proposal include other direct costs and the basis for pricing? If travel is included does the proposal include number of trips, number of people, number of days per trip, locations, and rates (e.g. airfare, per diem, hotel, car rental, etc)?		
28. FAR 15.408, Table 15–2, Section II Paragraph E	If royalties exceed $1,500 does the proposal provide the information/data identified by Table 15–2?		
29. FAR 15.408, Table 15–2, Section II Paragraph F	When facilities capital cost of money is proposed, does the proposal include submission of Form CASB–CMF or reference to an FPRA/FPRP and show the calculation of the proposed amount?		
FORMATS FOR SUBMISSION OF LINE ITEM SUMMARIES			
30. FAR 15.408, Table 15–2, Section III	Are all cost element breakdowns provided using the applicable format prescribed in FAR 15.408, Table 15–2 III? (or alternative format if specified in the request for proposal)		
31. FAR 15.408, Table 15–2, Section III Paragraph B	If the proposal is for a modification or change order, have cost of work deleted (credits) and cost of work added (debits) been provided in the format described in FAR 15.408, Table 15–2.III.B?		
32. FAR 15.408, Table 15–2, Section III Paragraph C	For price revisions/redeterminations, does the proposal follow the format in FAR 15.408, Table 15–2.III.C?		
OTHER			
33. FAR 16.4	If an incentive contract type, does the proposal include offeror proposed target cost, target profit or fee, share ratio, and, when applicable, minimum/maximum fee, ceiling price?		
34. FAR 16.203–4 and FAR 15.408 Table 15–2, Section II, Paragraphs A, B, C, and D.	If Economic Price Adjustments are being proposed, does the proposal show the rationale and application for the economic price adjustment?		
35. FAR 52.232–28	If the offeror is proposing Performance-Based Payments—did the offeror comply with FAR 52.232–28?		

PROPOSAL ADEQUACY CHECKLIST—Continued

References	Submission item	Proposal page No.	If not provided EXPLAIN (may use continuation pages)
36. FAR 15.408(n) ..... FAR 52.215–22 FAR 52.215–23	Excessive Pass-through Charges—Identification of Subcontract Effort: If the offeror intends to subcontract more than 70% of the total cost of work to be performed, does the proposal identify: (i) the amount of the offeror's indirect costs and profit applicable to the work to be performed by the proposed subcontractor(s); and (ii) a description of the added value provided by the offeror as related to the work to be performed by the proposed subcontractor(s)?		

(End of provision)

[FR Doc. 2013–07106 Filed 3–27–13; 8:45 am]

BILLING CODE 5001–06–P

DEPARTMENT OF DEFENSE

Defense Acquisition Regulations System

48 CFR Parts 225 and 252

RIN 0750–AH69

Defense Federal Acquisition Regulation Supplement: United States-Korea Free Trade Agreement (DFARS Case 2012–D025)

AGENCY: Defense Acquisition Regulations System, Department of Defense (DoD).

ACTION: Final rule.

SUMMARY: DoD has adopted as final, without change, an interim rule amending the Defense Federal Acquisition Regulation Supplement (DFARS) to implement the United States-Korea Free Trade Agreement. The Republic of Korea is already party to the World Trade Organization Government Procurement Agreement.

DATES: *Effective date:* March 28, 2013.

FOR FURTHER INFORMATION CONTACT: Ms. Amy Williams, telephone: 571–372–6106.

SUPPLEMENTARY INFORMATION:

I. Background

DoD published an interim rule in the **Federal Register** at 77 FR 30356 on May 22, 2012, to implement the United States-Korea Free Trade Agreement (see the United States-Korea Free Trade Agreement Implementation Act (Pub. L. 112–41) (19 U.S.C. 3805 note)). There were no public comments submitted in response to the interim rule.

II. Executive Orders 12866 and 13563

Executive Orders (E.O.s) 12866 and 13563 direct agencies to assess all costs and benefits of available regulatory alternatives and, if regulation is necessary, to select regulatory approaches that maximize net benefits (including potential economic, environmental, public health and safety effects, distributive impacts, and equity). E.O. 13563 emphasizes the importance of quantifying both costs and benefits, of reducing costs, of harmonizing rules, and of promoting flexibility. This is a significant regulatory action and, therefore, was subject to review under section 6(b) of E.O. 12866, Regulatory Planning and Review, dated September 30, 1993. This rule is not a major rule under 5 U.S.C. 804.

III. Regulatory Flexibility Act

DoD certifies that this rule will not have a significant economic impact on a substantial number of small entities within the meaning of the Regulatory Flexibility Act, 5 U.S.C. 601, *et seq.* Korea is already a designated country under the World Trade Organization (WTO) Agreement on Government Procurement (GPA). Although the rule now opens up Government procurement to the goods and services of Korea at or above the threshold of $100,000, DoD does not anticipate any significant economic impact on U.S. small businesses. DoD only applies the trade agreements to the non-defense items listed at DFARS 225.401–70, and acquisitions that are set aside or provide other forms of preference for small businesses are exempt. FAR 19.502–2 states that acquisitions that do not exceed $150,000 (except as described in paragraph (1) of the definition of ''simplified acquisition threshold'' at FAR 2.101) are automatically reserved exclusively for small business concerns, unless the contracting officer determines that there is not a reasonable expectation of obtaining offers from two or more responsible small business concerns.

IV. Paperwork Reduction Act

This rule affects the certification and information collection requirements in the provision at DFARS 252.225–7035, currently approved under OMB Control Number 0704–0229, titled Defense Federal Acquisition Regulation Supplement part 225, Foreign Acquisition, and related clauses, in accordance with the Paperwork Reduction Act (44 U.S.C. chapter 35). OMB Control Number 0704–0229 assessed the total burden related to part 225 at approximately 57,230 hours. The impact of this rule, however, is negligible, because it is just a question of under which category offered goods from the Republic of Korea would be listed. The rule also affects DFARS 252.225–7018, which is a variant of the Buy American-trade agreements certifications already approved, which was issued as an interim rule under DFARS Case 2011–D046 (76 FR 78858, December 20, 2011).

List of Subjects in 48 CFR Parts 225 and 252

Government procurement.

Kortnee Stewart,

Editor, Defense Acquisition Regulations System.

Interim Rule Adopted as Final Without Change

Accordingly, the interim rule amending 48 CFR parts 225 and 252, which was published at 77 FR 30356 on May 22, 2012, is adopted as a final rule without change.

[FR Doc. 2013–07131 Filed 3–27–13; 8:45 am]

BILLING CODE 5001–06–P

DEPARTMENT OF DEFENSE

Defense Acquisition Regulations System

48 CFR Part 252

RIN 0750–AH72

Defense Federal Acquisition Regulation Supplement: New Free Trade Agreement With Colombia (DFARS Case 2012–D032)

AGENCY: Defense Acquisition Regulations System, Department of Defense (DoD).

ACTION: Final rule.

SUMMARY: DoD has adopted as final, without change, an interim rule amending the Defense Federal Acquisition Regulation Supplement (DFARS) to implement the United States-Colombia Trade Promotion Agreement. This Trade Promotion Agreement is a free trade agreement that provides for mutually non-discriminatory treatment of eligible products and services from Colombia.

DATES: *Effective date:* March 28, 2013.

FOR FURTHER INFORMATION CONTACT: Ms. Amy Williams, Telephone 571–372–6106.

SUPPLEMENTARY INFORMATION:

I. Background

DoD published an interim rule in the **Federal Register** at 77 FR 31536 on May 29, 2012, to implement the United States-Colombia Trade Promotion Agreement Implementation Act (Pub. L. 112–42) (19 U.S.C. 3805 note).

No public comments were received. Therefore, DoD is adopting the interim rule as final, without change.

II. Executive Orders 12866 and 13563

Executive Orders (E.O.s) 12866 and 13563 direct agencies to assess all costs and benefits of available regulatory alternatives and, if regulation is necessary, to select regulatory approaches that maximize net benefits (including potential economic, environmental, public health and safety effects, distributive impacts, and equity). E.O. 13563 emphasizes the importance of quantifying both costs and benefits, of reducing costs, of harmonizing rules, and of promoting flexibility. This is not a significant regulatory action and, therefore, was not subject to review under section 6(b) of E.O. 12866, Regulatory Planning and Review, dated September 30, 1993. This rule is not a major rule under 5 U.S.C. 804.

III. Regulatory Flexibility Act

DoD certifies that this final rule will not have a significant economic impact on a substantial number of small entities within the meaning of the Regulatory Flexibility Act, 5 U.S.C. 601, *et seq.* Although the rule now opens up Government procurement to the goods and services of Colombia at or above the threshold of $77,494.00, DoD does not anticipate any significant economic impact on U.S. small businesses. DoD only applies the trade agreements to the non-defense items listed at DFARS 225.401–70, and acquisitions that are set aside or provide other forms of preference for small businesses are exempt. FAR 19.502–2 states that acquisitions that do not exceed $150,000 (with some exceptions) are automatically reserved exclusively for small business concerns.

IV. Paperwork Reduction Act

This rule affects the certification and information collection requirements in the provision 252.225–7035, currently approved under OMB Control Number 0704–0229, titled Defense Federal Acquisition Regulation Supplement Part 225, Foreign Acquisition, and related clauses, in accordance with the Paperwork Reduction Act (44 U.S.C. chapter 35). OMB Control Number 0704–0229 assessed the total burden related to part 225 at approximately 57,230 hours. The impact, however, is negligible, because it is just a question of under which category offered goods from Colombia would be listed.

List of Subjects in 48 CFR Part 252

Government procurement.

Kortnee Stewart,

Editor, Defense Acquisition Regulations System.

Interim Rule Adopted as Final Without Change

Accordingly, the interim rule amending 48 CFR part 252, which was published at 77 FR 31536 on May 29, 2012, is adopted as a final rule without change.

[FR Doc. 2013–07108 Filed 3–27–13; 8:45 am]

BILLING CODE 5001–06–P

DEPARTMENT OF DEFENSE

Defense Acquisition Regulations System

48 CFR Part 252

RIN 0750–AH78

Defense Federal Acquisition Regulation Supplement; Specialty Metals—Definition of ''Produce'' (DFARS Case 2012–D041)

AGENCY: Defense Acquisition Regulations System, Department of Defense (DoD).

ACTION: Final rule.

SUMMARY: DoD is issuing a final rule amending the Defense Federal Acquisition Regulation Supplement (DFARS) to revise the definition of ''produce'' as it applies to specialty metals. The National Defense Authorization Act for Fiscal Year 2011 directed DoD to review the definition of ''produce'' to ensure its compliance with the statutory restrictions on specialty metals and to determine if a revision to the current rule was necessary and appropriate.

DATES: *Effective Date:* March 28, 2013.

FOR FURTHER INFORMATION CONTACT: Ms. Amy Williams, Telephone 571–372–6106.

SUPPLEMENTARY INFORMATION:

I. Background

DoD published a proposed rule in the **Federal Register** at 77 FR 43474 on July 24, 2012. DoD proposed to amend the definition of ''produce'' to eliminate the phrase ''quenching and tempering'' of armor steel plate, and to expand the application of the other listed technologies, currently restricted just to titanium and titanium alloys, to any specialty metal that could be formed by such technologies.

DoD received comments on the proposed rule from 13 respondents.

II. Discussion and Analysis

DoD reviewed the public comments in the development of the final rule. A discussion of the comments and the changes made to the rule as a result of those comments is provided, as follows:

A. Summary of Significant Changes

The phrase ''gas atomization'' in the definition of ''produce'' has been revised to read ''atomization,'' in order to allow for other types of atomization (e.g., gas, water, centrifugal, plasma).

B. Analysis of Comments

1. Definition of ''Produce''

Comment: All respondents strongly supported the proposed definition of ''produce.'' Some of the benefits of the revised definition noted by the respondents are as follows:

Provides domestic control of material vital to protection of our troops is critical to national security interests, promotes self-sufficiency of U.S. defense industry.

Helps maintain a strong domestic armor steel plate industry and strengthens our defense industrial base, as well as the overall economic strength of the United States. Incentivizes investment in the manufacturing capacity, process technology, research and development necessary to meet the needs of the U.S. military, thereby reducing the possibility of supply shortages. Adds new U.S. steelmaking jobs, as well as jobs throughout the steelmaking supply chain.

Is consistent with statutory language and legislative history.

Response: Noted.

2. Impact of Changes in Production Capacity of Domestic Producers of Steel Plate

Comment: Some respondents commented on the statement by DoD in the **Federal Register** preamble to the proposed rule, that there is now sufficient capacity to meet DoD requirements, if DoD were to remove ''quenching and tempering of steel plate'' from the definition of ''produce.'' One respondent expressed concern that by linking the regulatory definition of ''produce'' to changes in capacity, DoD is creating uncertainty and discourages potential investors from building or maintaining domestic production.

Several respondents also commented that there are already existing statutory authorities (i.e., the nonavailability and national security exceptions), which should provide sufficient flexibility and make it unnecessary to revisit the issue of the definition of ''produce.''

Response: Since these respondents are all strongly in support of the proposed rule, no change is necessary in the final rule.

3. Other Processes

Comment: One respondent expressed support for DoD's decision to amend the definition of ''produce'' to create a uniform definition for all specialty metals. Several respondents noted that the definition now only includes those technologies that make a significant contribution equivalent to melting, and allows for flexibility and future technology advances that could replace the melt stage for certain specialty metals.

Response: Noted.

Comment: One respondent stated that atomization of metal is not always achieved by using a stream of gas. Atomization may also be achieved by rotating molten metal at high speeds. Therefore, the respondent recommended deletion of the word ''gas'' from the proposed definition of ''produce.''

Response: DoD has removed the word ''gas'' from the final rule.

Comment: The same respondent stated that the final consolidation of metal powders produced through atomization would not be sufficient to confer domestic origin on the resulting article, because the atomization process uses molten metal. Therefore, the metal powder produced through atomization is a melt-derived powder, rather than a non-melt derived powder. The respondent did not request a change to the rule with regard to this issue, but requested clarification in the preamble to the final rule that articles produced from melt-derived metal powders, including metal powders produced through atomization, would have to be consolidated from domestically melted metal powders in order to be considered products of the United States.

Response: DoD has created a vertical list to improve the clarity with regard to the three processes that constitute production, and must therefore be performed in the United States: (i) Atomization; (ii); sputtering; or (iii) final consolidation of non-melt derived powders.

It is very clear that final consolidation only constitutes production with regard to metal powders that are derived by non-melt processes (such as mechanical or chemical processes). It is acceptable for non-melt processes to occur outside the United States, as long as final consolidation occurs in the United States, but any processes involving melting must occur in the United States.

III. Executive Orders 12866 and 13563

Executive Orders (E.O.s) 12866 and 13563 direct agencies to assess all costs and benefits of available regulatory alternatives and, if regulation is necessary, to select regulatory approaches that maximize net benefits (including potential economic, environmental, public health and safety effects, distributive impacts, and equity). E.O. 13563 emphasizes the importance of quantifying both costs and benefits, of reducing costs, of harmonizing rules, and of promoting flexibility. This is not a significant regulatory action and, therefore, was not subject to review under section 6(b) of E.O. 12866, Regulatory Planning and Review, dated September 30, 1993. This rule is not a major rule under 5 U.S.C. 804.

IV. Regulatory Flexibility Act

A final regulatory flexibility analysis has been prepared consistent with the Regulatory Flexibility Act, 5 U.S.C. 601, *et seq.,* and is summarized as follows:

DoD has issued a final rule amending the Defense Federal Acquisition Regulation Supplement (DFARS) to revise the definition of ''produce'' as it applies to specialty metals. The National Defense Authorization Act for Fiscal Year 2011 directed DoD to review the definition of ''produce'' to ensure its compliance with 10 U.S.C. 2533b and to determine if a revision to the current rule was necessary and appropriate.

The objective of the proposed rule is to revise the definition of ''produce'' as it applies to production of specialty metals, in response to comments received and consideration of current technologies for production of specialty metals other than titanium. The legal basis for the rule is 10 U.S.C. 2533b. No significant issues were raised by the public comments in response to the initial regulatory flexibility analysis. There were no comments filed by the Chief Counsel for Advocacy of the Small Business Administration.

The final rule affects primarily producers of specialty metal steel armor plate, and manufacturers that supply steel armor plate that will be incorporated into end items to be acquired by DoD. Producers of specialty metals are generally large businesses. There is a high capitalization requirement to establish a business that can melt or produce specialty metals. The small business size standard for primary metal manufacturing ranges from 500 to 1,000 employees. All the specialty metals producers reviewed had more than 500 employees. There are numerous manufacturers of products containing specialty metals, either as prime contractors or subcontractors. DoD does not have the data to determine the total number of these manufacturers, or the number that are small businesses, because the Federal Procurement Data System only collects data on prime contractors and end items, not subcontractors and components of end items.

There are no projected reporting, recordkeeping, or other compliance requirements.

DoD did not identify any significant alternatives to the rule which would minimize any impact of the rule on

small entities and still meet the requirements of the statute 10 U.S.C. 2533b.

V. Paperwork Reduction Act

The rule does not contain any information collection requirements that require the approval of the Office of Management and Budget under the Paperwork Reduction Act (44 U.S.C. chapter 35).

List of Subjects in 48 CFR Part 252

Government procurement.

Kortnee Stewart,

Editor, Defense Acquisition Regulations System.

Therefore, DoD amends 48 CFR part 252 as follows:

PART 252—SOLICITATION PROVISIONS AND CONTRACT CLAUSES

■ 1. The authority citation for part 252 continues to read as follows:

Authority: 41 U.S.C. 1303 and 48 CFR Chapter 1.

252.212–7001 [Amended]

■ 2. Section 252.212–7001 is amended by—

■ a. Removing clause date ''(FEB 2013)'' and adding ''(MAR 2013)'' in its place; and

■ b. In paragraph (b)(7), by removing the clause date ''(JUL 2009)'' and adding ''(MAR 2013)'' in its place; and

■ c. In paragraph (b)(8), by removing the clause date ''(JUN 2012)'' and adding ''(MAR 2013)'' in its place.

■ 3. Section 252.225–7008 is amended by—

■ a. Removing clause date ''(JUL 2009)'' and adding ''(MAR 2013)'' in its place; and

■ b. Removing the numerical designations preceding the definition headings of ''Alloy''; ''Produce''; ''Specialty metal''; and ''Steel''.

■ c. Revising the definition of ''Produce'' in paragraph (a) to read as follows:

252.225–7008 Restriction on Acquisition of Specialty Metals.

* * * * *

(a) * * *

Produce means—

(i) Atomization;

(ii) Sputtering; or

(iii) Final consolidation of non-melt derived metal powders.

* * * * *

■ 4. Section 252.225–7009 is amended by—

■ a. Removing clause date ''(JUN 2012)'' and adding ''(MAR 2013)'' in its place; and

■ b. Removing the numerical designations preceding the definition headings of ''Alloy''; ''Assembly''; ''Commercial derivative military article''; ''Commercially available off-the-shelf item''; ''Component''; ''Electronic component''; ''End item''; ''High performance magnet''; ''Produce''; ''Qualifying country''; ''Required form''; ''Specialty metal''; ''Steel''; and ''Subsystem''.

■ c. Revising the definition of ''Produce'' in paragraph (a) to read as follows:

252.225–7009 Restriction on Acquisition of Certain Articles Containing Specialty Metals.

* * * * *

(a) * * *

Produce means—

(i) Atomization;

(ii) Sputtering; or

(iii) Final consolidation of non-melt derived metal powders.

* * * * *

252.244–7000 [Amended]

■ 5. Section 252.244–7000 is amended by—

■ a. Removing clause date ''(JUN 2012)'' and adding ''(MAR 2013)'' in its place; and

■ b. In paragraph (b), by removing the clause date ''(JUN 2012)'' and adding ''(MAR 2013)'' in its place.

[FR Doc. 2013–07107 Filed 3–27–13; 8:45 am]

BILLING CODE 5001–06–P

DEPARTMENT OF COMMERCE

National Oceanic and Atmospheric Administration

50 CFR Part 660

[Docket No. 120313185–3252–01]

RIN 0648–BC01

Fisheries Off West Coast States; Pacific Coast Groundfish Fishery; Trawl Rationalization Program; Reconsideration of Allocation of Whiting

AGENCY: National Marine Fisheries Service (NMFS), National Oceanic and Atmospheric Administration (NOAA), Commerce.

ACTION: Final rule.

SUMMARY: This action revises several portions of the Pacific Coast Groundfish Fishery Trawl Rationalization Program (program) regulations in response to a court order requiring the National Marine Fisheries Service (NMFS) to reconsider the initial allocation of Pacific whiting (whiting) to the shorebased individual fishing quota (IFQ) fishery and the at-sea mothership fishery. Additionally, NMFS concludes after review of public comments and the record as a whole, that the Pacific Fishery Management Council's (Council's) recommendation to maintain the existing initial allocations of whiting is consistent with the Magnuson-Stevens Fishery Conservation and Management Act (MSA), the Pacific Coast Groundfish Fishery Management Plan (Groundfish FMP), and other applicable law. This final rule will affect the transfer of quota share (QS) and individual bycatch quota (IBQ) between QS accounts in the shorebased IFQ fishery, and severability of catch history assignments (CHAs) in the mothership fishery, both of which will be allowed on specified dates, with the exception of widow rockfish. Widow rockfish is no longer an overfished species and transfer of QS for this species will be reinstated pending reconsideration of the allocation of widow rockfish QS in a future action. The divestiture period for widow rockfish QS in the IFQ fishery will also be delayed indefinitely.

DATES: This rule is effective April 1, 2013.

ADDRESSES: Information relevant to this final rule, which includes a final environmental assessment (EA), and a final regulatory flexibility analysis (FRFA), including a regulatory impact review (RIR), are available from William W. Stelle, Jr., Regional Administrator, Northwest Region, NMFS, 7600 Sand Point Way NE., Seattle, WA 98115–0070. Electronic copies of this final rule are also available at the NMFS Northwest Region Web site: *http://www.nwr.noaa.gov.*

FOR FURTHER INFORMATION CONTACT: Ariel Jacobs, 206–526–4491; (fax) 206–526–6736; *Ariel.Jacobs@noaa.gov.*

SUPPLEMENTARY INFORMATION:

Background

This final rule revises several provisions of the Pacific coast trawl rationalization program and supersedes regulatory delays and/or revisions NMFS established through temporary emergency action in a final rule published on August 1, 2012 (77 FR 45508), and extended on January 17, 2013 (78 FR 3848). Specifically, this action will:

(1) Allow transfer of QS or IBQ (except for widow rockfish QS) between QS permit holders in the shorebased IFQ fishery beginning January 1, 2014;

(2) Require QS permit holders in the shorebased IFQ fishery holding QS or

IBQ in excess of the accumulation limits to divest themselves of excess QS (except for widow rockfish QS) or IBQ by November 30, 2015;

(3) Allow limited entry trawl permit holders in the mothership fishery to request a change (or transfer) of mothership/catcher vessel (MS/CV) endorsement and its CHA beginning September 1, 2014;

(4) Require MS/CV endorsed limited entry trawl permit owners to divest themselves of ownership in permits in excess of the accumulation limits by August 31, 2016; and

(5) Extend the divestiture period delay and moratorium on transfer of widow rockfish QS in the shorebased IFQ fishery indefinitely.

Each of these elements, along with additional background information, were described in detail in the proposed rule (78 FR 72, January 2, 2013), and are not repeated here.

NMFS Decision on Reconsideration of the Initial Allocation of Whiting

NMFS has determined that the Council's recommendation to maintain the existing initial whiting allocations (No Action Alternative) is consistent with the MSA, the Groundfish FMP, the court's order in *Pacific Dawn* v. *Bryson,* No. C10–4829 TEH (N.D. Cal.) (*Pacific Dawn*), and other applicable law. This determination is based on NMFS' review of the entire record, including the Council's record and NMFS' consideration of comments received on the proposed rule. After considering the required statutory factors and the goals and objectives of the trawl rationalization program and the Groundfish FMP, NMFS has determined that the existing initial whiting allocations provide for a fair and equitable allocation to the shorebased IFQ program and the mothership coop program. These initial allocations of whiting take the form of QS for both harvesters and processors in the shorebased IFQ program, and CHA for harvesters in the mothership fishery. For the purposes of this action, ''quota'' is used to describe allocations of both CHA and QS to harvesters in the shorebased IFQ and mothership fisheries, as well as to describe allocation of QS to shoreside processors.

In the context of the relatively narrow remand ordered by the court in *Pacific Dawn,* NMFS has determined that many MSA factors show minimal differences, or none at all, between the alternatives under consideration. Additionally, where there are differences, they are tempered by the relatively modest shifts in quota among the various alternatives and other relatively minor variations that result. For example, comparing the No Action Alternative to the alternative most favoring recent history (Alternative 4) reveals overall modest shifts in quota from status quo holders to others (17% for shorebased harvesters, 3% for shoreside processors, and 18% for mothership harvesters) and generally modest shifts among most individual permit holders and processors. This is principally the result of the fact that a majority of participants in the whiting fishery have generally continuous participation in the fishery. Given this, and in balancing the various factors in this decision (including control date, investment and dependence, disruption, efficiency, employment, current and historic participation, communities), NMFS has concluded there are fundamental and compelling reasons to maintain the existing initial allocations of whiting. Of most importance, maintaining existing allocations takes into account the intent of the 2003 control date and principal policy goals of the trawl rationalization program (including reducing overcapitalization and ending the race for fish). Maintaining status quo also reduces concentration of quota among participants and achieves a wider geographic distribution of initial program benefits. NMFS believes these key factors, among other considerations, outweigh the reasons supporting alternatives that favor more recent history (e.g., recognizing recent fishery participants' dependence and investments, reducing future quota leasing or acquisition costs, reducing quota to recent non-participants, and reflecting more recent market and fishery conditions). More detailed discussion on the specific statutory factors under MSA section 1853a(c)(5)(A) and related provisions is set forth in the preamble to the proposed rule and not repeated here.

Maintaining the initial whiting allocations, including the use of qualifying years of 1994–2003 for whiting harvesters and 1998–2004 for whiting processors, supports the Council's and NMFS' efforts to reduce overcapitalization and end the race for fish by not rewarding increases in harvesting or processing that occurred after the end of the qualifying periods (i.e., after the 2003 control date). The existing whiting allocations also support the importance of the control date for this and future rationalization programs, minimize the concentration of harvester quota, and provide for a wider initial geographic distribution of the program benefits along the coast and the corresponding fishing communities.

Importance of the Control Date

Two fundamental purposes of Amendment 20 were to reduce overcapitalization in the groundfish fishery and to end the race for fish. The Council adopted and announced the 2003 control date to further these purposes, seeking to discourage speculative capitalization and discourage effort by putting participants on notice that any fishing history earned beyond 2003 may not count towards a future allocation system. Since the original notice of the 2003 control date in the **Federal Register** on January 9, 2004 (69 FR 1563), there has been continuous and systematic work to develop the trawl rationalization program. Throughout the reconsideration, many participants testified or provided written comment with respect to how the announcement of the control date affected their business decisions. NMFS acknowledges that a control date is not a guarantee that any specific period will count toward initial allocations. NMFS believes, however, that recognition of the business and investment decisions made by participants who interpreted the control date as signaling the likely end of the qualifying period is consistent with the fundamental purposes of Amendment 20. While no mechanism exists to separate speculative from non-speculative effort after the control date, maintaining the control date for harvesters does not reward any speculative behavior after the control date and does not penalize those who honored the control date. Additionally, an important signal is sent for future programs (nationally as well as on the Pacific Coast)—the use of control dates is still a valid tool to deter increases in effort or capitalization that would undermine conservation and management goals pending development of a limited access privilege program.

Moreover, for processors, the record establishes valid reasons to end the qualifying period for processors one year after the 2003 control date, including accounting for processor investments that took place prior to the announcement of the control date but that did not begin to earn processing history until 2003 and 2004. In addition, the purpose of applying control dates to onshore processors, while important, is not necessarily as significant as for harvesters, who have a greater ability to move into and out of various fisheries to gain potential fishing history. These factors, in addition to the fact that it was not clear until 2005 that the 2003 control date potentially applied to

processors, support the decision that a one year shift, to 2004, was a reasonable cutoff date for processors.

While maintaining the end of the qualifying periods necessarily excludes providing credit for more recent participation, publication of the control date and the continuous and active deliberation of the Council provided notice to all participants that this was a possibility. Thus, those participants who did increase their investments or effort in the fishery were on notice that any history established in later years might not count towards initial allocations. Additionally, participants had the opportunity to purchase permits from others to bolster their catch history totals to potentially reflect their increased investments and effort (as the record reflects did occur). The fairness of maintaining the initial cut-off dates also is reflected in the public comments of participants that supported No Action Alternative despite the fact that they would receive higher levels of quota if an alternative favoring more recent history were adopted.

Although the length of time between the original control date and the agency approval in 2010, implementation of the program in 2011, and this decision in 2013 is longer than the time span in most programs that announce control dates, this is explained by the complexity of the program, which resulted in significant time needed to involve the public and fishery participants, develop alternatives, develop appropriate analytical documents, reach a final decision, implement that decision, and then engage in this reconsideration process. Additionally, the Council and NMFS have fully considered all applicable fishing and processing history for this decision, leaving no gap in the available information considered.

Minimize Concentration of Quota

The record reflects that basing initial whiting allocations on alternatives that include more recent history would generally have the effect of concentrating quota for harvesters in fewer hands, creating fewer winners and more losers compared to maintaining the existing allocations (see EA, Section 4.5.3.2 and FRFA). Moreover, when viewed in the context of the trawl rationalization program as a whole, moving the end date of the qualifying period to a more recent year could have the effect of creating ''double-dip'' gains and losses for certain participants due to having different allocation periods for whiting compared to some non-whiting species. For example, there were seven permits that, after 2003, reduced their share of harvest in the non-whiting fishery while increasing their share in the whiting fishery (see EA, Section 2.2.3.2). Using an allocation period other than the No Action Alternative would benefit those participants with more whiting history in recent years because they would receive an amount of non-whiting quota allocated under a 2003 cut-off while simultaneously receiving increased whiting quota (i.e., double-dipping) if a later end year was used for whiting allocations, creating inequities in the allocation of target species.

Wider Geographic Distribution of the Initial Benefits of the Program

The record reflects that maintaining the existing allocations would provide a more even distribution of initial whiting allocations along the coast and to the corresponding fishing communities. Shifting to alternatives favoring more recent history could contribute to a northward shift in initial quota distribution, and accordingly a similar shift in any benefits stemming from that initial allocation (see EA, Section 4.3.3). The northward shift is expected to be relatively small (less than 8 percent of the total quota—2 percent for processors and 6 percent for harvesters between the No Action Alternative and Alternative 4), and the analysis shows whiting landings have been shifting northward in recent years (due to fish availability and investments in ports). Although the 8 percent difference is relatively modest, NMFS believes that maintaining the initial whiting allocations supports historic fishing communities in more southern locations and creates a wider geographic distribution of the initial benefits associated with allocations. Maintaining initial whiting allocations would further support one of the guiding principles in the development of Amendment 20 (see Am 20 EIS, Section 1.2.3)—to minimize negative impacts resulting from localized concentrations of fishing [and processing] effort. For processors, in addition to the distribution of wealth associated with initial allocations, the wider distribution of initial allocation of whiting QS may provide some additional influence over where deliveries are made along the coast than if the initial allocation were based on more recent qualifying years that would shift allocations and potentially landings northward.

Comments and Responses

In the proposed rule, NMFS solicited public comments on the regulatory revisions and on NMFS' preliminary determination that the Council's recommendation to maintain the initial allocations of whiting for the shorebased IFQ fishery and the at-sea mothership fishery is consistent with the MSA, the Groundfish FMP, and other applicable law. The comment period ended February 1, 2013. NMFS received 19 written comments on the proposed rule reflecting comments from individuals, organizations and other agencies. NMFS also received oral comments regarding the existing initial whiting allocations at a meeting during the comment period. The U.S. Department of the Interior submitted a letter indicating that it had no comment. One written comment also addressed the proposed regulatory revisions. The comments received and NMFS' responses are below.

Process

Comment 1: NMFS has the responsibility of reviewing the record as a whole and ensuring that the action is consistent with the Groundfish FMP and the MSA. NMFS must not simply defer to the Council.

Response: NMFS agrees that it must make the final decision and cannot simply defer to the Council with respect to whether the recommendation to maintain the existing initial whiting allocations and make associated regulatory revisions is consistent with the Groundfish FMP, the MSA, including the national standards, and other applicable law. NMFS has taken its own hard look at the entire record, including public comment on the proposed rule, and determined that this action satisfies those requirements.

Comment 2: The public reconsideration process was thorough, lengthy, open, and transparent. To make appropriate decisions, Council members need stakeholder involvement and the Council reviewed and heard numerous public comments and advisory body statements from various perspectives. In addition, the majority of Council members that participated in the reconsideration were not members of the Council when it took its original action in 2008, which allowed for thorough review of the fairness and equity of that decision.

Response: NMFS agrees that stakeholder involvement is the foundation of an open public Council process and is an important component of decision making, especially with respect to allocations. The Council, including NMFS representatives, reviewed and considered many comments from various perspectives at Council meetings and NMFS has further considered stakeholder input through the comments received on the proposed rule.

Comment 3: It is unclear what role the NOAA Catch Share Policy played in the reconsideration of initial whiting allocations. Further, based on the section of the NOAA Catch Share Policy entitled ''evaluating catch share applicability,'' three of the characteristics for use in determining whether a fishery is a suitable candidate for a catch share program—overcapitalization, overfished stocks, and bycatch—do not appear to be present in the whiting fishery in 2010 and therefore it is unclear whether the whiting fishery was a good candidate for a catch share program.

Response: NMFS considered the NOAA Catch Share Policy (the Policy) as part of the reconsideration. Generally, the Policy recommends that allocations be revisited on a regular basis and that an allocation decision should include consideration of conservation, economic, and social criteria in furtherance of the goals of the underlying FMP. The reconsideration of initial whiting allocations reflected consideration of the factors identified in the Policy. The decision to include whiting in the trawl rationalization program was approved in Amendment 20 and implemented in 2011. NMFS also considered provisions of the Policy at that time. Amendment 20 was developed to address among other things, overcapitalization, overfishing, and bycatch, including bycatch of overfished species, in the groundfish trawl fishery (75 FR 78344). The decision to include the whiting fisheries as part of the trawl rationalization program is not part of the reconsideration of initial whiting allocations or this rule.

Comment 4: Consideration of a factor means that it must be weighed and taken into account, not noted and ignored. NMFS must provide a reasoned analysis that connects the factor with the decision it makes with respect to initial whiting allocations.

Response: NMFS agrees that consideration of a factor entails more than noting its existence. However, when making an allocation decision, the factors that must be considered do not require any particular outcome. For example, the requirement to consider current harvests when establishing a fair and equitable initial allocation does not mandate that the qualifying periods for initial whiting allocations be expanded to include years beyond the existing cut-offs. As the record demonstrates, there is a rational basis for excluding more recent years from the qualifying periods. The existing initial allocations further the goals and objectives of Amendment 20 and avoid rewarding increases in harvesting or processing at a time when the fishery was overcapitalized, and a time after participants were aware that history beyond 2003 may not qualify for use in an allocation formula.

Current and Historical Harvests

Comment 5: More recent years should be used in the qualifying period for allocating whiting to processors to reflect changes in the marketplace. The whiting market has changed since the end of the existing qualifying periods, specifically with the growth of the market for the whiting headed and gutted product. The changes made the fishery more efficient and economically stable after 2004, so more recent years should be more heavily weighted to establish a fair and equitable allocation.

Response: NMFS agrees that there have been changes in the markets for whiting. These changes have led to changes in the amounts and types of product made out of whiting. Since the early 1990s, shorebased processors have converted whiting into headed and gutted (H&G), surimi, fillets, and fish meal products. In the early 1990s, there was a much greater emphasis on surimi. New plants came on line in response to the demand for surimi caused by the phase out of Japanese and Korean fleets off the U.S. and Russian waters. In recent years there has been a much greater emphasis on H&G products, sparked by the increased world demand for H&G products. In the early 1990s, the market for H&G products was a limited domestic market and now the H&G market is international.

The surimi market has declined, based on changes in the Japanese and Korean demand and from foreign competition. As a result, surimi plants have either shut down or reduced production. Prior to 2004, up to five plants were producing surimi. Currently, there is only one shorebased plant that is producing whiting surimi and that plant is also producing H&G products.

In response to changing world markets, company restructuring, and other factors, there has always been entry and exit within the whiting processing sector. There have also been changes in relative prices of products that in turn determine the mix of various products. Underlying both the development of the surimi processing capacity, and now H&G processing capacity, have been declining trends in world groundfish production.

Overall, the major companies of the processing industry that existed prior to 2004 still exist in 2012. For companies that no longer exist, the quota that would have been allocated to those entities has been distributed to existing companies in proportion to the size of their quota allocations under the existing initial allocations. NMFS recognizes the influence of H&G prices and the new world markets, but does not believe these changes should result in selecting an alternative that includes more recent years in the whiting allocation formula, as all companies are partaking in the expanded market for H&G whiting and can continue to do so irrespective of the amount of the whiting QS received by that entity. Furthermore, recent entrants into the processing sector entered at a time when they could benefit from the expanded market for H&G whiting, which could allow them to be competitive despite receiving no, or a lesser amount, of an initial whiting allocation. They also entered at a time after the control date had been announced and while the Council was actively pursuing development of the trawl rationalization program. NMFS believes that it is fair and equitable to use qualifying years that more heavily reflect the investments and processing history that occurred prior to 2004, consistent with the intent of discouraging speculative increases in capacity and minimizing disruption to processors that invested under the old management regime prior to the Council beginning its efforts to rationalize the fishery.

Comment 6: Using more recent years in the qualifying period promotes conservation because larger fish tend to occur in northern waters, and northern processors have a better opportunity to process larger and higher quality fish. Under alternatives that would shift more quota to the north, fewer larger fish can be harvested, leaving more fish in the water to spawn and sustain the fishery. Using more recent years would also promote conservation because H&G product has higher recovery rates than surimi product which dominated the whiting fishery in earlier years.

Response: NMFS agrees that northern processors may have a greater opportunity to process larger and higher quality fish. However, NMFS disagrees that using more recent years promotes conservation to any meaningful extent. Any conservation benefit associated with the alternatives is extremely small and highly speculative, and does not justify selecting an alternative that uses more recent years when considered in light of all the factors.

The EA analyzes the potential biological impacts associated with the alternatives that were considered. Generally, for whiting, harvesting a larger proportion of older fish in any given year is likely to have an upward

influence on stock productivity relative to harvesting the same amounts of whiting with a smaller proportion of older fish. In an extreme hypothetical where all harvests were delayed until September of each year—when whiting are typically larger and located further to the north—a 10 percent increase in stock productivity was projected when compared to having all harvest occurring in April.

In contrast, the amount of quota that could initially be shifted geographically and potentially result in changes in the location of harvest is much smaller than in the all-harvest hypothetical above. To begin, the allocation alternatives are unlikely to affect the location of harvest in the mothership fishery or the catcher/processor fishery because these fisheries are not tied to a need for shorebased processing. Together, the mothership and catcher/processor fisheries are allocated 58 percent of the non-tribal commercial allocation (24 percent for the mothership sector and 34 percent for the catcher-processors). Of the remaining 42 percent of the non-tribal commercial allocation given to the shorebased IFQ fishery, the allocation most likely to have any short term effects on geographic area of harvest is the QS issued to processors, which is a maximum of 20 percent of the 42 percent allocated to the shoreside fishery, or 8.4 percent of the non-tribal commercial whiting allocation. The EA also indicates that the effects of initial allocations on the distribution of fishing among communities are difficult to predict because over the long term quota will likely move toward those ports where profit margins tend to be the highest, regardless of the initial allocations (see EA Section 4.3.3). Using the 10 percent hypothetical result as a maximum, and applying that result to the 8.4 percent of the non-tribal commercial whiting allocation to processors, results in an upper bound on the impact on stock productivity of less than 1 percent. Even this is likely an overstatement, however, given that only a relatively small amount of the quota actually shifts to more northern based processors when comparing the No Action Alternative to Alternative 4 (which most favors recent history).

NMFS also notes that when adding Canadian and Tribal fisheries to the analysis, the potential for conservation benefits becomes smaller. For 2011, the total U.S. and Canadian Total Allowable Catch (TAC) limit was 393,751 mt. The U.S. portion of the TAC was 290,903 mt, which includes the U.S. shorebased allocation of 92,818 mt. The 20 percent of shorebased whiting QS allocated to processors is approximately 5% of the U.S. and Canadian coastwide TAC. NMFS further notes that depending on the strength of the year classes, it may be difficult, even in the northern portion of the fishery, to avoid small fish (see Status of the Pacific hake (Whiting) stock in U.S. and Canadian Waters in 2012, International Joint Technical Committee for Pacific Hake, Final Document 2/29/2012, pages 27–28, *http://www.nwr.noaa.gov/fisheries/management/whiting/pacific_whiting.html*).

The EA concludes that given the relatively small amount of quota that may be reallocated among geographic regions, the fact that QS trading will likely change geographic distribution regardless of the initial allocations, and considering fleet mobility, the effect of the initial allocations on area of harvest and resulting biological impacts are negligible. Additionally, even assuming recovery rates for H&G products are greater than those for surimi, NMFS does not anticipate that initial allocations to processors will have a significant influence on the type of whiting products produced by processors, especially in the long term. As a result, there does not appear to be a difference in conservation among the alternatives in terms of product recovery. Also see response to comment 5 addressing the transition from surimi to H&G for the whiting fishery.

In sum, selecting an alternative that uses more recent years in the qualifying period is not justified based on differences in biological impacts and NMFS believes that other considerations justify maintaining the existing initial allocations.

Comment 7: The purpose of considering current and historical harvests for processors is that it allows a council and the Secretary to consider the relative value of investments made in processing capacity early in the development of a fishery compared to the value of investments in processing made late in a fishery that is already heavily overcapitalized. This is one of the considerations that should go into the decision of which years of processing participation are best used for fair and equitable allocations to processors.

Response: NMFS agrees and has concluded that investments in processing capacity made earlier in the fishery should be more heavily taken into account when determining the initial allocation qualifying periods. This is in part because the allocation of quota to processors was intended to minimize disruption to processors that had invested under an expectation of operating under the pre-Amendment 20 fishing regime, and also because any investments made after the announcements of the control date were made at a time when it was evident that the Council was actively pursuing an effort to rationalize the trawl fishery.

Dependence, Investment, Participation, and Latent Permits

Comment 8: A significant portion of quota was allocated to permits that had no history of landings in the fishery after 2003. The EA indicated that allocations went to 21 permits that had no participation in the shorebased whiting fishery during the seven years between 2004 and 2010, representing 10.2% of the shorebased whiting quota. Furthermore, the EA also identified that whiting allocations went to 14 permits (representing 9.6% of the quota allocated to the mothership sector) that had no participation in the mothership sector during the same seven years between 2004 and 2010. Considering the number of permits that received quota but have not participated in the fishery since 2003, it is evident that the existing qualifying periods were based at least partially on some industry members' desire to sell their quota and retire. The initial allocations should instead be based on what is best for those currently participating. When considering investment as a measure of dependence, NMFS should focus only on whiting and not on other fisheries.

Response: NMFS acknowledges that quota was allocated to some permits that did not directly participate by harvesting or landing whiting in the whiting fishery in the years between 2004 and 2010. However, NMFS does not believe that this fact warrants including more recent years in the qualifying period because many of the permit owners owned other permits that were active in the whiting fishery during those years, participated in other fisheries including other sectors of the whiting fishery, or held those inactive permits as an investment.

Groundfish fisheries on the West Coast are frequently prosecuted based on a ''portfolio'' approach where fishermen participate in various sectors or corollary fisheries throughout a given year and between years to maximize benefits. To the extent permits received quota but did not actively participate in West Coast fisheries during the years referenced, the quota was still allocated to the permit owner at the time of initial allocation and reflects the investment of the participant in the permit. As discussed in the EA, a limited entry trawl permit is a highly fishery-dependent investment that must be renewed annually. Public comment,

both at the Council meetings and through comments on the proposed rule, also indicated that some fishermen actively chose to invest in permits in the hope that they would receive initial allocation quota amounts that would accommodate their intended fishing strategies. As noted in public comment on the proposed rule in support of the existing allocations of whiting, the initial harvester allocation to current permit owners recognizes recent participation and investments in the fishery. After the 2003 control date, 18 permits were sold to new permit owners and the permit's catch history went to those new permit owners. Another commenter made a similar comment that business decisions were made to retire vessels after the control date rather than investing in vessel upgrades and maintenance, with the understanding that the intent of the program was to promote consolidation within an overcapitalized fishery. Furthermore, as discussed below, when considering permits that were truly inactive in either the shorebased or mothership sectors of the whiting fishery after 2003, only approximately 1.5 percent of the history based quota was allocated to those permits. Finally, the topic raised by the commenter regarding the business decisions made by those who acquire QS through initial allocation (e.g., whether to sell or lease that quota to another participant or eventually sell the QS/CHA once it becomes transferable) are present irrespective of the qualifying period chosen.

With respect to inactive permits being owned by an entity that also actively participated in the whiting fisheries through the use of other permits, for shorebased whiting permit QS allocation recipients, 4 of the 21 permits referenced by the commenter were owned by entities that also controlled other shorebased whiting permits. Those four permits received No Action QS allocations totaling 2.35% (i.e., 2.9% of the total shorebased whiting allocation to permits). Similarly, 4 of the 13 permits referenced by the commenter (the EA demonstrates there were 13 rather than 14 as stated in the comment, Section 4.5.2.1) that received CHA were owned by entities that also control other MS whiting permits. Those four permits received No Action CHA allocations totaling 3.8% (i.e., 3.8% of the total MS whiting CHA allocation to permits). In addition, for permits that received either shorebased whiting QS or mothership CHA allocations, there were a total of 15 permits that had no shorebased whiting or Mothership whiting history after 2003. Those 15 permits received No Action Shorebased whiting QS allocations totaling 3.8% (i.e., 4.75% of the total shorebased whiting allocation to permits), and No Action Mothership CHA allocations totaling 1.46% (i.e., 1.46% of the total MS whiting CHA allocation to permits). Six of those 15 permits were owned by entities that also controlled other shorebased whiting permits. Those six permits received No Action shorebased whiting QS allocations totaling 2.46% (i.e., 3.1% of the total shorebased whiting allocation to permits). None of the 15 permits were owned by entities that also controlled other MS/CV whiting permits. When looking at the whiting fishery as a whole, only 1.46% of the CHAs and only 1.65% of the shorebased QS was allocated to permits that were truly latent in both the mothership and shorebased sectors. NMFS defines ''truly latent'' permits as those that received either mothership CHA or shorebased quota share allocations where the permit itself was not fished in either the mothership fishery or the shoreside whiting fishery, and the owner of the permits also did not fish other owned permits in the mothership or shoreside whiting fishery after 2003.

Additionally, after accounting for participation in other fisheries, including those off Alaska, there were a total of only nine permits (shorebased or mothership) where the owner apparently had no fishing activity off the West Coast or Alaska after 2003. These nine permits translate into only 1.3 percent of the shorebased QS and 1.0 percent of the mothership catch history assignment used for the 2011 and 2012 fisheries.

Accordingly, the existing allocations allocate only a very small portion of quota to permits that are held by owners that did not participate in whiting, West Coast, or Alaskan fisheries or own other permits that did participate after 2003.

Comment 9: NMFS seemed to have difficulty defining dependence although the meaning of dependence in the MSA is clear and means to rely upon the fishery for financial support and income. Also, it is not fair and equitable to give quota to permits which, based upon the available objective information, did not participate in the fishery for some time and arguably no longer demonstrate any financial dependence on the fishery.

Response: NMFS did not have difficulty defining dependence in the proposed rule. In the proposed rule, NMFS noted that the MSA does not provide a definition of dependence, provided an explanation of the meaning of dependence, and noted that factors related to dependence may be measured in numerous ways. As stated, in general terms, dependence upon the fishery relates to the degree to which participants rely on the whiting fishery as a source of wealth, income, or employment to financially support their business. Current harvests, historical harvests, levels of investment over time, and levels of participation over time are all aspects of dependence, as they can all be connected to the processes that fishers and processors use to generate income. For purposes of this decision, NMFS believes that including all potential sources of income in assessing the level of dependence is appropriate.

NMFS also considered the Council's approach as discussed in Section 5.4.2 of the EA. The EA cites the NOAA technical memorandum ''The Design and Use of Limited Access Privilege Programs,'' (Anderson and Holliday 2007), which notes that ''various measures of dependence on the fishery [exist] including percent of revenue or opportunities to participate in other fisheries, and inter-relations with other fishery related business especially with respect to employment.'' The existing initial allocations do not provide history based quota to harvesters after 2003 or processors after 2004. As described above, that does not mean that investment and dependence during that period were ignored. Rather, the issue of investment and dependence for more recent years has been thoroughly explored, and there are valid policy reasons for excluding those years as discussed elsewhere. One important fact to recognize is that most current harvesters and processors in the fishery were also historical participants during the qualifying periods for initial allocation, and the shifts in quota among the initial allocation alternatives considered were relatively modest overall and for a majority of the participants. Permit owners receiving initial allocation received quota reflecting their historic participation and current permit ownership (reflective of dependence and investment) as well as a share of the buyback quota that was equally distributed.

Comment 10: Catch history years should be 1994–2010 or 2000–2010 to be fair and equitable and permits with no active involvement after 2004 should not be allocated whiting quota. Another commenter stated that NMFS should adopt 2000–2010 for the catch history years and adopt a present participation requirement that would require permits to have landed at least 500 mt of whiting in the period 2003–2010 to

recognize the factors required for consideration in allocation decisions.

Response: As discussed in the preamble and in response to other comments, NMFS has concluded that excluding years beyond 2003 for harvesters and beyond 2004 for processors results in a fair and equitable allocation. Selecting an alternative that would include years beyond the existing cut-offs would be contrary to the policies underlying Amendment 20. Requiring permits to have landed at least 500 mt of whiting in the period 2003–2010 is not necessary to recognize the factors required in consideration of an allocation decision. Furthermore, adopting a present participation requirement for the period of 2003–2010 that would exclude any inactive permits would be inconsistent with the Groundfish FMP history since the Council rejected ''Use It or Lose It'' rules in 1994 relating to the development of Amendment 6 to the FMP (adopting the limited entry program). Similarly, requiring a participation requirement spanning the years after the announcement of the control date creates an incentive and a reward for increasing participation at a time the Council was attempting to address overcapitalization. Finally, the requirement suggested by the comment could undermine decisions made relative to investments in permits.

Comment 11: It is instructive that other fishery management councils are considering the problem of allocation of quota to license holders with minimal history or participation. The North Pacific Council, in a February 2013 problem statement stated that ''distributing shares with minimal history may be argued to be inconsistent with the requirement to allocate shares based on fishery dependence.'' Further, in a footnote, the council paper noted that acquisition of a permit ''is clearly an investment in the fishery,'' but ''reflects only an investment in a fishery privilege, and not an investment in a fishery operation.'' (Citing Item C–3(b) for the upcoming North Pacific Council meeting).

Response: First, NMFS notes that the Pacific Council and NMFS considered investments in and dependence upon the fishery in making this decision on whiting allocation. Second, NMFS notes that when fishery management councils develop catch share or other programs, councils may choose to weigh the factors differently based on the specific facts before them, including the factor of dependence and investment. NMFS notes that for purposes of the Pacific groundfish fishery and the decision on reallocation of initial whiting quota, a permit is viewed as a highly fishery dependent investment. Permits have no alternative use outside of accessing the trawl fishery; therefore permit owners are entirely dependent on the trawl groundfish fishery for recovery of their investment in permits. Other fishing assets, such as vessels, have some value in alternative uses.

Employment

Comment 12: Several commenters addressed the issue of employment. Some commenters expressed concern that companies that have scaled down their employment more recently would qualify for more quota based on their historical participation, while companies with larger recent harvesting and processing history will lose employment if they cannot afford to lease or buy quota. Another commenter stated employment on catcher vessels that benefitted from improved market conditions during 2000–2010 will be strongly disadvantaged given a 1994–2003 qualifying period because their quota shares will be less than their participation in recent years. Another commenter said 1994–2003 (status quo) maintained, on average, their fleet's historic and current access to whiting, their number of vessels, and their number of crewmember jobs in both the shorebased and mothership fisheries. Another commenter noted the analysis shows that overall the stability or level of employment does not vary much between all alternatives, including status quo; however, there are anticipated effects on individual fishing businesses based on any change from status quo.

Response: The final EA addresses impacts to employment (see section 5.4.3.5). While there may be some initial local shifts or variations in employment among the alternatives, the analysis did not anticipate notable variations in the stability or level of employment overall. As discussed elsewhere in the responses to comments, the relatively modest differences in the alternatives overall and for a majority of individuals also likely means even initial changes in employment will be limited. Overall, NMFS believes it has adequately considered impacts to employment in the harvesting and processing sectors in arriving at its decision.

Leasing, Competitive Advantage, and Efficiency Issues

Comment 13: Quota allocation to processors can provide a significant competitive advantage. Processors are unique from harvesters in that their investments are rooted to the community and the local fisheries that support that community, making dependence different for a processor than for a harvester. Initial allocations should use processing history from 2000–2010 because that period of time captures current and historical harvests and reflects a period of time when the fishery had recovered from being overfished and reached record revenues for fishery participants. Some processor companies made significant investments over the last decade to upgrade their facilities that supports using more recent years.

Response: NMFS is aware that initial quota allocation may provide advantages to one processor over another. However, given that the overall amount of quota that may shift between processors is only 3%, the degree of competitive advantage or even its existence depends on the business decisions of the quota recipient and numerous other considerations such as processor location, presence of local competition, access to markets, fleet dynamics, and status of the whiting stock, among other factors.

One main purpose of allocating 20 percent of the shorebased whiting quota to processors was recognition of the significant processing investments that had been made in reliance upon the fishery prior to the announcements of the control date and the development of Amendment 20. The allocation to processors was, in part, an attempt to minimize the disruption during the transition to the new system and provide some consideration and measure of stability. (See EA section 10.1, statement of Mr. Anderson; Amendment 20 EIS, Section 2.6.6).

NMFS and the Council acknowledge that testimony indicated that investments were made by some processors after 2004, including investments in infrastructure to process other stocks, such as sardines. However, it is reasonable to provide initial allocations more heavily weighted to reflect the investments and dependence on the fishery that occurred prior to the time it was evident that the Council was pursuing a change to the management system. Development of the trawl rationalization program could be most disruptive to processors that invested prior to 2004 because the program was likely to result in changes to the timing of landings, and potentially result in fewer vessels participating in the fishery—part of the effort to reduce overcapitalization. Given the establishment of the 2003 control date and subsequent clarification after the 2004 season that the 2003 control date could apply to processors, businesses that entered the processing sector or

made investments after 2003 did so with a degree of risk regarding receiving any initial allocations or larger allocations.

NMFS recognizes that how quota is initially allocated to processors has some influence on the competitive advantage of processors between themselves and with respect to new entrants, including the potential for increased bargaining power with harvesters. However, other processors may have locational advantages whether it is to infrastructure (e.g., cold storage facilities, highways, water supply and waste removal) or closer access to the resource itself (some processing of whiting has occurred in inland locations). Northern processors, in addition to being located closer to where much of the harvest has recently occurred, also have a locational advantage in the sense that they have more immediate access to tribal whiting resources as tribal fisheries are located in northern Washington. Since 2003, one processor in particular has processed over 99% of the tribal shorebased whiting harvests.

Any competitive advantages processors gain under the alternatives are relatively modest given that the entire allocation is only 20 percent of the shorebased fishery. Overall, only 3 percent of the processor quota shifts from status quo holders to others, and the levels of shift among most individual processors are similarly modest, especially when compared to overall volumes of fish processed and revenues generated.

Additionally, although the effect is relatively modest, based on the analysis in the EA regarding the potential for northward shift in quota, and public comment relative to the competitive advantages for processors from being allocated quota, maintaining the existing initial allocations rather than selecting an alternative that uses more recent years could also help mitigate negative impacts resulting from localized concentrations of fishing and processing effort while providing the initial allocations necessary for the trawl rationalization program to function.

Comment 14: One commenter stated that five new processors entered the fishery after 2004 and that NMFS failed to explain why it is rational to exclude these new entrants. For example one processor that went out of business in 2000 received quota under the existing allocations but a processor that began processing whiting in 2006 and has risen to become a significant player in the whiting market received no quota.

Response: NMFS did not allocate quota to processors that went out of business. For processors that would have been allocated quota but did not exist at the time of initial allocation, that quota was distributed to the other qualifying processors proportional to their initial QS amounts. Any new entrant after 2005 is in the same situation as a new entrant in 2012, as neither would have initially allocated quota and would need to purchase or lease quota if doing so was a desired part of their business strategy. After the 2005 clarification that the 2003 control date applied to processors, new entrants were on notice that their history might not count towards initial allocations. NMFS notes that depending on how processor is defined (e.g., company, buying/processing site, etc.) the number of new processor entrants after 2004 will vary. The EA notes that eight processors entered the shorebased whiting processing market for the first time after 2004 and did not receive an initial allocation, and of these eight processors only two consistently processed whiting since entering the fishery.

Comment 15: The cost of leasing quota was not appropriately analyzed or considered. The added costs of purchasing or leasing quota from inactive permit holders is contrary to National Standard 7, which states that ''Conservation and management measures shall, where practicable, minimize costs and avoid unnecessary duplication.'' In addition, the costs associated with increasing observer costs, the Pacific Coast Groundfish Fishery buyback program and the soon to be implemented cost recovery program are new costs that NMFS failed to consider when making a decision as to whether the initial allocation of quota should be changed or not. The costs associated with leasing quota will be particularly constraining on smaller businesses. Local small community companies need whiting quota to keep their businesses going. Larger processing companies can afford to lease or buy IFQ no matter what the price. Smaller, family-owned vessels will be lost over time to corporations owning multiple vessels or other assets. One of the commenters also made an attempt to estimate the fair market values and leasing costs of whiting quota. The projections were approximately as follows: value of shorebased whiting allocated to the 21 permits that were reportedly inactive during 2004–2010 is $8,500,000 and that the annual cost of leasing this IFQ is conservatively $680,000. For the mothership sector, the fair market value of the whiting quota allocated to the 14 permits reportedly inactive during 2004–2010 is $4,320,000 and that the annual cost of leasing this quota is near $350,000.

Response: Leasing is an expected activity in many fisheries. Before the trawl rationalization program, limited entry permits were being leased by fishermen in order to gain access to trawl fisheries. Consistent with the MSA requirement to establish a policy and criteria for transferability, through sale or lease, of limited access privileges such as whiting IFQ, 16 USC 1853a(c)(7), the ability to lease quota was an element of the trawl rationalization program analyzed and adopted through Amendment 20. Some level of leasing is expected under the program. Leasing is expected in the Shorebased IFQ Program in particular given that 20% of the whiting catch history-based quota of shorebased harvesters was allocated to processors—as a result many shorebased whiting fishermen, especially those not strongly affiliated with a processor, may have to lease quota to return to pre-trawl rationalization catch levels.

The environmental impact statement for Amendment 20 (Amendment 20 EIS) considered the economic condition of the fishery, which was one of the motivations for considering alternate management approaches for the trawl fishery. The Amendment 20 EIS also considered efficient utilization of the resource in the design elements of the program, especially compared to the previous trip limit management fishery. It also weighed the costs and benefits of such a program, including initial allocations and leasing costs, on different user groups such as harvesters, processors, and potential new entrants for the IFQ and MS fisheries (see Amendment 20 EIS sections 4.4, 4.6.2.5, 4.6.3.4, 4.6.3.7, 4.7.2.3, 4.9.2.2, and 4.9.3.7). The issue of leasing costs was also addressed in the final rule implementing the trawl rationalization program. (75 FR 60868, 74 October 1, 2010, Comment 27).

In addition to the Amendment 20 EIS, the EA for the reconsideration of whiting allocation weighed the costs and benefits of allocation on different user groups, including harvesters, processors, potential new entrants, and communities for the IFQ and MS fisheries (see EA sections 4.3, 4.5.3, 5.4, and 5.8). The EA also discussed costs of leasing in other fisheries and potential effects on Pacific groundfish fisheries (EA section 3.3.2.6 and 4.5.3.1), and the value of limited entry permits as an investment whether actively fished in recent years or not (EA section 3.3.2.5 and 4.3). Regarding leasing costs, the EA

for this action recognized that leasing costs will occur, that the benefits of the program (which requires an initial allocation) outweigh the costs, and that, ultimately, quota will tend towards the most efficient users, especially once trading is allowed.

NMFS recognizes that those receiving initial allocations may be placed at a competitive advantage over new entrants or existing participants who must purchase more quota if they desire to maintain their recent harvest levels. (EA section 5.4). However, any new costs associated with leasing also come with new benefits—the opportunity to acquire a desired amount of quota that can then be harvested without competing in a race for fish, along with the other benefits anticipated under the trawl rationalization program. The EA demonstrates that quota was transferred to many shorebased whiting fishermen in 2011, allowing successful harvest well in excess of some participants' initial allocations. (EA section 3.3.2.7). NMFS also considered the costs associated with the buyback program that was implemented in 2005 (70 FR 40225, July 13, 2005). The loan associated with the buyback program financed most of the cost of a fishing capacity reduction program in the Pacific Coast groundfish fishery and corollary fisheries. To repay the loan, participants in the Shorebased IFQ Program and the MS Coop Program currently pay five percent of the full delivery value of fish harvested and delivered to processors. In addition, the MSA requires that cost recovery be a component of a LAPP such as the trawl rationalization program. Under the proposed cost recovery program (78 FR 7371, February 1, 2013), participants in the Shorebased IFQ Program and the MS Coop Program would be required to pay a fee, not to exceed three percent of the ex-vessel value of fish delivered to processors, to cover part of the costs of management, data collection, and enforcement of the trawl rationalization program. Costs associated with the trawl rationalization program, including the costs of observer coverage, were also considered in the Amendment 20 EIS, section 2.6.3, A–2.3.3. NMFS notes that the agency currently covers the majority of the costs for observers off the West Coast (but not the North Pacific). NMFS also notes that there is a national effort underway to explore the use of electronic monitoring as one potential tool to address the costs associated with observers. See *http://www.nmfs.noaa.gov/sfa/reg_svcs/Councils/ccc_2013/K_NMFS_EM_WhitePapers.pdf.*

Although some alternatives could more closely align initial allocation amounts with recent levels of harvest associated with a given permit, and potentially minimize leasing costs to those participants in the short term, when balanced with the other considerations, NMFS has determined that the Council's recommendation is consistent with National Standard 7 and minimizes costs to the extent practicable. The costs associated with the buyback program (which benefitted the industry by helping to reduce the level of overcapacity and substantially expanded fishing opportunity for all vessels, as reflected by higher trip limits), the observer program, and the statutorily required cost recovery program, do not alter NMFS' conclusion. NMFS notes that some commenters felt that NMFS did properly analyze and consider the impact of the initial allocation on costs and benefits, as required by National Standard 7, and that status quo balances costs and benefits by allocating to a large amount of recipients with a geographic spread among those that received initial allocations.

The commenter that provided estimates of fair market values of quota and leasing costs used a multiplier of 3.75 applied to the ex-vessel value of whiting to determine fair market value of whiting QS. NMFS does not have sufficient information to evaluate the use of a multiplier of 3.75 to project the value of quota, particularly as quota has yet to be traded. However, the EA considered that the ratio of QS to ex-vessel value ranged from 4:1 to 9:1 in a Canadian groundfish trawl fisher might be representative. Based on information developed from quota pounds sold or leased via the *Jefferson State Trading Company* Web site (*http://jeffersonstatetradingco.com/cgi-bin/auction/auction.pl*), which tracks the trading of quota pounds for this program, the leasing ratio of 30% of the ex-vessel value may be high but representative. Even assuming that the projections provided by the commenter are accurate, it does not alter NMFS conclusions for the reasons described above and throughout this final rule.

In response to the comment about the impacts of costs on smaller businesses, and smaller, family-owned vessels, in general, impacts of the allocation decision on both small and large businesses were considered, and regulations are in place that attempt to minimize any undue burden placed upon small businesses (e.g., accumulation limits). As discussed below in the summary of the final regulatory flexibility analysis (FRFA), over the years 1998 to 2010, there were 17 processors that participated in the fishery and that meet the recent participation criteria of the various alternatives. After taking into account ownership and affiliation relationships, there are 12 processing entities based on Small Business Administration (SBA) definitions. Of these 12 processing entities, there are 9 small processing entities and three large processing entities that are affected by this rule. The FRFA also notes that regardless of the allocation alternative chosen some small businesses will be affected.

As discussed in response to comment 14, although NMFS agrees that in some circumstances the initial allocations of quota could result in some degree of competitive advantage, the degree of that advantage is dependent on numerous factors. Furthermore, owning whiting QS is not required to process whiting. New entrants or processors with lower initial allocations may choose to lease or purchase quota as part of their business plans, but may also use other methods to incentivize delivery of whiting to their facilities. Furthermore, any advantages processors may gain under the alternative considered are relatively modest given the entire allocation is only 20 percent of the shorebased whiting QS, overall only 3 percent of the processor quota shifts from status quo holders to others, and the levels of shift among most individual processors are similarly modest, especially when compared to overall volumes of fish processed and revenues generated.

Comment 16: An article critical of the effects of leasing in the Canadian halibut fishery, ''The elephant in the room: The hidden costs of leasing individual transferable fishing quotas,'' Evelyn Pinkerton, Danielle N. Edwards, Marine Policy 33 (2009) 707–713, was not sufficiently considered in the context of whether the existing allocations are consistent with National Standard 5, which states that ''Conservation and management measures shall, where practicable, consider efficiency in the utilization of fishery resources; except that no such measures have economic allocation as its sole purpose.'' The failure to give the most quota to the most active participants through 2010 creates new leasing costs and is not justified in terms of economic objectives.

Response. NMFS considered the article referenced by the commenters, and its position that certain conditions that allow for the efficiency benefits of individual transferable quotas (ITQs) to accrue are not present in the Canadian halibut fishery; therefore, the authors

argue in part that vessels operating with initially granted quota are more financially viable than new entrants and can afford to pay higher quota lease fees, eventually having the effect of bidding up the lease price.

NMFS notes that there was also a published comment in response to this article questioning the article's data and assertions. (A rejoinder to E. Pinkerton et al. The elephant in the room: The hidden costs of leasing individual transferable fishing quotas, Bruce R. Turris, Marine Policy 34 (2010) 431–436). One of the main conclusions of the published response was that it would be incorrect to suggest that quota will not be transferred to the most economically efficient operators. The commenter noted that even with transaction costs and other limitations, tradable quota should move to more efficient operators, and further noted that those who initially start out with quota may be more profitable than new entrants or those that need to lease more quota, but that issue is one of income distribution and not an efficiency issue. The initial authors published a short response to the comment, asserting that the commenter did not directly address the major points of their article and that their data analysis was appropriate. (Ignoring market failure in quota leasing? Evelyn Pinkerton, Danielle N. Edwards. Marine Policy 34 (2010) 1110–1114.)

The debate appears to be one of whether the halibut program in Canada is achieving efficiency at all or whether the halibut program is more efficient than the former derby style of fishery it replaced. This debate is also about the distribution of rent—who shares in the profits or income generated in the fishery. The debate is not whether there have been efficiency gains, but whether additional gains can be achieved. Pinkerton claims they have not achieved full efficiency because of market inefficiencies and the lack of access to capital for some participants. However, it is not clear why participants who were granted quota would not try to be as efficient as possible and why they would not get out and lease their quota if they were less efficient. High lease prices may suggest that efficiency is high as owner operators are making high profits and are unwilling to lease quota to other fishermen unless the lease price is at the level where it is more profitable to lease than fish. In terms of the reconsideration of initial whiting allocations, these articles discuss the effects of leasing, which was a component of Amendment 20 and will exist regardless of the years chosen for determining the allocation of quota. See response to comment 15.

With respect to the net economic benefit to the nation, the effects of the alternatives are similar. The initial allocation of whiting is a one-time distribution of wealth in the form of QS and CHA to members of the fishing industry, which allows for implementation of the program. In addition to assisting existing participants' transition to the new management system, the initial allocation will likely affect harvester and processor competitiveness. To the degree that initial allocations match up with the harvesters that will use the quota, transition costs will be lessened. However, whatever initial allocation alternative is selected does not affect the long-term efficiency and operation of the fishery. In the short run, there may be transition costs and disruption to participants' operations depending on how closely the initial allocations are distributed to the most efficient participants. To the degree that initial allocations match up with the harvesters and processors that will use the quota, transition costs and disruption will be lessened as the fishery moves to its long-term, more efficient state. Regardless of the allocation alternative chosen, it is unlikely that the initial allocation will be that allocation that represents the most efficient users. NMFS does not currently know which users are the most efficient and which users in the future will be the most efficient. Note that the biggest users of the resource may not be the most efficient users. Over the long term, it is expected that operations will move, or quota will be traded, to the ports in which the highest profits can be earned, taking into account all forms of costs such as average distance to fishing grounds and catch and bycatch rates.

With the choice of maintaining the existing initial allocations over alternatives that reflect more recent history, NMFS and the Council are providing to those who have historically participated in the fishery (the majority of which are also recent participants) and are anticipated to have a better chance to benefit from the market processes described above. NMFS considered how the short and long term impacts of leasing may vary between the alternative whiting allocations and has concluded that the benefits of more heavily favoring history prior to the end of the existing qualifying periods furthers the purposes of Amendment 20, rewards investments and dependence consistent with the policies underlying announcing a control date, and minimizes disruption to those participants that made business decisions based on the assumption that quota formulas were unlikely to include more recent years.

With regard to the comment on National Standard 5, the trawl rationalization program was designed, in part, to reduce fleet capacity and to economically rationalize the groundfish trawl fishery. Reducing excess capacity is expected to improve the efficiency in the utilization of fishery resources as well as reduce the levels of incidental catch. NMFS' decision to maintain the initial whiting allocations would not change any of those program design features that would allow more efficient utilization of the resource, such as reductions in fleet capacity, reduced regulatory discards, and once the moratorium is lifted, quota trading. After considering the relevant factors, including costs associated with leasing, NMFS has determined that the existing initial allocations consider efficiency in the utilization of fishery resources, where practicable, and are consistent with National Standard 5.

Comment 17: The North Pacific Council has recognized the problem of absentee ownership of crab harvest shares by persons or corporations with little or no involvement in the prosecution of the fisheries, which limits the amount of quota available for active participants in the Bearing Sea/Aleutian Islands (BSAI) Crab Rationalization Program. The same problem exists in the Pacific whiting fishery under the status quo allocations.

Response: NMFS agrees that the North Pacific Council is considering the issue of absentee ownership of crab harvest shares, and notes that in its report of the February 2013 North Pacific Council meeting, the Council:

> elected to take no further action considering alternatives to define active participation requirements for vessel owner harvest shares. Currently, holders of those shares have no ongoing requirement to remain active in the fisheries as either vessel owners or crewmembers. The Council also received a discussion paper concerning the development of cooperative measures to i) promote share acquisition by action participants; ii) address high quota lease rates; and iii) ensure reasonable crew compensation. Although the Council elected to take no regulatory action, it expressed concern with high lease rates, crew compensation, and the availability of quota shares to active participants in the fisheries. To that end, the Council passed a motion requesting that each cooperative in the program submit a voluntary report annually describing measures taken by the cooperative to facilitate share acquisitions by active participants and affecting high lease rates and crew compensation * * *. The motion

suggests that these reports be provided at the Council's October meeting.

News and Notes, North Pacific Fishery Management Council, February 2013, page 4, available at *http://www.fakr.noaa.gov/npfmc/PDFdocuments/newsletters/news213.pdf*.

Relative to the reconsideration of the initial allocation of whiting, NMFS acknowledges that in the future there may be similar issues that need to be considered and potentially addressed during the five year review. However, the crab rationalization program and the Pacific groundfish trawl rationalization program are significantly different and it is not possible to predict that the issues and potential solutions will be the same.

Comment 18. NMFS should determine how many of the inactive, or latent, permits from 2004–2010 actively harvested their whiting allocations during the post-rationalized fishery, 2011–2012.

Response: NMFS considered the information in the final EA, which shows the number of permits that did not land fish in 2011. Information for 2012 was not available for use during the reconsideration.

Comments on Control Date

Comment 19: Control dates are merely advisory and do not obligate the Council or NMFS to use them. The MSA does not contain any overarching considerations such as a control date that trump the National Standards and other statutory criteria. The control date should not be used as a basis for maintaining the existing initial allocations.

Response: NMFS acknowledges that a control date is not a guarantee that any specific period will count toward initial allocations. NMFS believes, however, that recognition of the business and investment decisions made by participants who interpreted the control date as signaling the likely end of the qualifying period is consistent with the fundamental purposes of Amendment 20, including reducing overcapacity. Commenters supporting existing allocations noted that it is important to adhere to control dates to prevent speculative increases in harvesting or processing, and that doing so supports a fundamental objective of the program to address longstanding overcapacity issues in both the harvesting and processing sectors of the whiting fishery. The overarching considerations described in the propose rule reflect consideration of the factors identified in National Standard 4 and the MSA provisions at 16 U.S.C. 1853a(c)(5)(A) in light of all relevant factors, including the other National Standards and the control date. After considering those factors, and taking into account public comment on the proposed rule, NMFS has considered all of the factors related to the initial allocations and has concluded that use of the 2003 control date as the cut-off period for harvesters, and use of 2004 for processors is rational. As described in the preamble and in response to other comments, the control date and the underlying policy goals of Amendment 20, while important, are not the sole basis for NMFS' decision.

Comment 20: While it was a lengthy process between announcing the control date and implementation, the process was lengthy because of the complexity of the trawl rationalization program, including the allocation decisions The control date could not be considered ''stale'' because there was no period of inactivity between the control date and implementation, there was no major change in the broad policy fishery managers were pursuing or in the fundamental design of the program.

Response: NMFS agrees that the control date is not ''stale.'' The EA documents the extensive process required for developing the trawl rationalization program and the numerous stages for stakeholder input. (EA table 1–1, 1–2). Considering the amount of time necessary to develop the program, the length of time between the control date and program implementation, as well as this reconsideration, is reasonable. Furthermore, NMFS has not ignored the years beyond the control date, but rather has considered all the required information, including harvests after 2003, in deciding to maintain the existing initial allocations.

Comment 21: Not adhering to control dates as announced when allocating initial quota sets a dangerous precedent, and could potentially result in increased harvesting or processing capacity in an attempt to increase the initial allocation of quota in the development of future limited entry or limited access privilege programs (LAPPs). Relying on the control date is consistent with National Standard 4 and the groundfish FMP management goals that list conservation as the first goal, as well as the Amendment 20 EIS that states that failure to use a control date may exacerbate conservation concerns. Several other commenters also noted that they would benefit by receiving increased harvester allocations if more recent years were included, but they believe that reliance on the control dates is fair because everyone in the fishery knew the consequences of fishing after the control date and therefore support the existing allocations.

Response: NMFS agrees that, in general terms, control dates serve a useful purpose of deterring speculative increased capacity or effort during the development of LAPPs. NMFS further agrees that not using the announced date of 2003 for harvesters could have a negative effect in the future when the Pacific Council or other councils begin to consider limited entry or LAPP programs, and further notes that there is a rational basis for modifying the control date by one year for processors. Further, NMFS believes that the reliance on the control date expressed by many commenters benefited the underlying purposes of Amendment 20 pending its implementation. The fact that several participants commented that they would benefit financially from selecting an alternative that uses more recent years, but nevertheless support the existing allocations, is indicative of the fairness and equity of the Council's recommendation and NMFS' decision.

Comment 22: Harvests after the control date should be rewarded because fishing and processing was happening in the Pacific coast whiting fishery where and when there were market opportunities.

Response: As noted in the proposed rule, no mechanism exists to separate speculative from non-speculative effort after the control date and by maintaining the control date for harvesters, any speculative behavior after the control date is not rewarded and those who acted consistent with the control date and goals of Amendment 20 are not penalized. As explained in this final rule, and after consideration of the statutory factors, NMFS has determined that the control date of 2003 as the cut-off for the harvester qualifying period is rational, as is the use of 2004 as the cut-off for the processor qualifying period, and the end result is a fair and equitable initial allocation.

Comment 23: The policies supporting a control date for harvesters do not apply to processors, and are at best a theoretical and indirect concern. Processor interests in acquiring quota are to ensure that fish continue to support the processing plants. Processors do not speculatively increase capacity to acquire quota as an asset to later be bought, sold, leased, or traded. Testimony at the June 2012 Council meeting indicated concern about undercapitalization in the processing sector, not overcapitalization.

Response: The control date was intended to put the industry on notice and deter speculative increases in effort

and capitalization, regardless of sector. Section 3.3.2.4 of the EA discusses the key indicators that were used to identify overcapacity issues within the fishery. Fishing season length is a key indicator of overcapacity in a fishery because in the absence of excess capacity, a fishing season could potentially run through December 31, assuming other constraining factors are taken into account. Although allowable harvests increased in the years from 2004–2010, season length in the shorebased whiting fishery decreased during this period. The weekly harvest pattern for the shorebased fishery during this period demonstrates substantial excess capacity. Fleet weekly harvest was used as a proxy for effort and capacity in the shorebased sector (both harvesters and processors). Even if the fleets were capable of sustained fishing at only one half their lowest annual maximum weekly rate, the amount of time required to take the maximum allocation available in recent years would be far less than the potential number of season days available. Despite a situation of excess capacity, after 2004 the number of vessels participating was generally on an upward trend in both the shorebased and mothership sectors. While one commenter noted that with respect to processors, speculation and overcapacity was a theoretical or indirect concern, another commenter noted that in industrial fisheries like Pacific whiting, all harvests are landed and processed. Therefore the harvest and subsequent processing of that harvest provides a proxy for investments and dependence in the fishery by harvesters and processors. The purpose of applying control dates to onshore processors, while important, is not necessarily as significant as for harvesters, who have a greater ability to move into and out of various fisheries to gain potential fishing history. In addition, comments on the proposed rule and public testimony at Council meetings noted that including 2004 in the qualifying period for processors takes into account more recent investments that were made in 2003 but that did not come online and start acquiring history until 2004. These factors, in addition to the fact that it was not clear until 2005 that the 2003 control date potentially applied to processors, support the decision that a one year shift, to 2004, was a reasonable cutoff date for processors.

Although one commenter testified at the June 2012 Council meeting that the shorebased processing sector was undercapitalized, other public testimony indicated that the fishery was heavily overcapitalized and there was no shortage of processing capacity available, and that the control date was meant as to deter the entire industry from injecting more capital into an already overcapitalized fishery, or at the very least put them on notice that doing so was not guaranteed to be rewarded by being credited for initial allocations. NMFS also notes that a commenter asserted that those who made investments in harvesting and processing capacity later in the development of a fishery, after it was already overcapitalized, have made investments that are at a net loss to society and therefore should not necessarily be rewarded for their investments with allocations of quota.

Control dates are largely preemptive tools meant to signal that speculation will not be rewarded. NMFS is unable to determine whether speculation would have been worse had no control date been issued. However, in the absence of a control date, that incentive would have been present. For all these reasons, NMFS believes it is appropriate to continue to apply the 2004 cut-off date to processors.

Comment 24: The **Federal Register** notices regarding the control date were unclear on how the control date applied to processors, even after the clarification in 2005.

Response: NMFS agrees that the original announcement of the 2003 control date, 69 FR 1563, did not explicitly state that it applied to processors. However, the notice published in 2005, 70 FR at 29714, reiterated the 2003 control date and clarified that it did not preclude processors from participating in the trawl rationalization program and being eligible for quota. The original announcement that was clarified stated that the control date ''will apply to any person potentially eligible for IQ shares,'' but the list of eligible persons did not include processors. In clarifying that processors could be eligible for initial allocation, the 2005 notice included processors as an entity eligible for IQ shares to which the 2003 control date would apply. However, NMFS recognizes that processors were not expressly included until after the end of the 2004 season and thus potentially not on notice, which is one reason why NMFS determines that it is reasonable to extend the cut-off for processors to 2004.

Comments on Current and Historical Participation of Fishing Communities

Comment 25: The Council and NMFS considered current and historical participation of fishing communities, partially through the allocation of quota to processors. The existing allocations spread the processor allocation along the coast among seven processors in five communities from Westport, WA to Eureka, CA. All of the alternatives other than the No Action Alternative would shift quota north devaluing the FMP objective to protect communities.

Response: NMFS agrees that the record reflects that maintaining the existing allocations would provide a more even distribution of initial whiting allocations along the coast and to the corresponding fishing communities. Shifting to alternatives favoring more recent history could contribute to a northward shift in initial quota distribution, and accordingly any benefits stemming from that initial allocation (see EA, Section 4.3.3). The northward shift is expected to be relatively small (less than 8 percent of the total quota—2 percent for processors and 6 percent for harvesters between the No Action Alternative and Alternative 4) and the analysis shows whiting landings have been shifting northward in recent years (due to fish availability and investments in ports). Some commenters noted that this northward shift would benefit two processors at the cost to all of the remaining processors. Similarly, a few harvesters would benefit at the cost of many. Although the shift in quota would be relatively modest, NMFS believes that maintaining the initial whiting allocations supports historic fishing communities in more southern locations and creates a wider geographic distribution of the initial wealth associated with allocations. Maintaining initial whiting allocations would further support one of the guiding principles in the development of Amendment 20 (see Am 20 EIS, Section 1.2.3)—to minimize negative impacts resulting from localized concentrations of fishing [and processing] effort. For processors, in addition to the distribution of wealth associated with initial allocations, the wider distribution of initial allocation of whiting QS may provide some additional influence over where deliveries are made along the coast than if the initial allocations are based on more recent qualifying years that would shift allocations and potentially landings northward. However, as discussed in response to other comments, it is difficult to determine the degree of competitive advantage or the impacts of the geographic location of QS allocated to processors on location of future harvest. Ultimately, the QS issued to processors should assist in

mitigating for the changes expected in the timing and location of harvest expected over the long-term under the trawl rationalization program.

Comments on industry support for allocation

Comment 26: One commenter said that the law is clear; NMFS cannot make the decision about the proper allocation method based on political considerations or popularity, only on the facts of the case and the applicable law. In addition, no referendum was held so it is impossible to determine exactly the degree of support for the initial allocation system.

Response: NMFS agrees that the agency cannot make the decision based on political considerations or popularity. As described in detail in this final rule, the agency has independent reasons that support its decision to maintain the existing initial allocations. NMFS further agrees that the agency cannot determine exactly the ''degree of support'' for the agency's adoption of the No Action Alternative because a referendum was not held; however the record is clear that the majority of participants that commented during the Council process and on the proposed rule support the Council/agency proposal. The extensive and transparent public process followed for this reconsideration, and the fact that a majority of commenters support the Council's recommendation, including some of those that would receive higher allocations under other alternatives, is one factor that the agency considered. Irrespective of the degree of industry support, NMFS believes the agency's decision results in a fair and equitable allocation.

Comment 27: Several commenters stated that they supported the existing initial allocations and noted that the Council and NMFS did a thorough and transparent reconsideration process, in which a major portion of the affected stakeholders participated.

Response: NMFS agrees.

Comment 28: Some commenters noted that industry continues to support the No Action Alternative as a fair and equitable decision that balances the necessary conditions, avoids disruption to the fishery, and upholds the validity of control dates and the integrity of the Council process. Industry support for the No Action Alternative is highlighted by several members of industry who would benefit under alternatives that included years after the control dates, yet they continue to support the No Action Alternative for the same reasons.

Response: NMFS agrees that the no action alternative is a fair and equitable allocation. A review of the record indicates that there were members of the industry that testified or commented in support of the No Action Alternative, although they would stand to benefit through a revised initial allocation. Any allocation scheme will create winners and losers. NMFS acknowledges the fact that some members of industry who might gain quota under other alternatives still support maintaining the existing initial allocations.

Comment 29: The trawl rationalization program (including the status quo initial allocation) has generated conservation benefits for groundfish stocks and economic benefits for the fishing industry and communities. Discards of overfished species have dropped dramatically, and per vessel revenues have increased, despite the fact that the fishery was previously overcapitalized, had been subject to overfishing, and had been declared an economic disaster in 2000. Several comments supported maintaining the existing whiting allocations and emphasized: the importance of honoring the control date and the underlying policy goals of Amendment 20, the fact that those who increased effort or capitalization post the control date did so with notice any history earned may not count towards an initial allocation, and the protection of historic fishing communities and a wider distribution of the initial allocations among those communities.

Response: NMFS agrees and has concluded that the reasons supporting maintaining the existing allocations for the shorebased IFQ and mothership whiting fisheries (e.g., taking in to account the intent of the 2003 control date and the policy goals of Amendment 20, not rewarding speculative behavior, minimizing concentration of quota, and achieving wider geographic distribution of initial program benefits) outweigh the reasons supporting alternatives that favor more recent history (e.g., providing greater amounts of quota to the recent fishery participants to recognize their recent fishery dependence/investments, potentially reducing future leasing or acquisition costs, reducing quota to latent permits, and reflecting the more recent market and fishery conditions). The initial allocation is a fair and equitable allocation and is consistent with the requirements of the MSA, the Groundfish FMP, other applicable law, and the court's order in *Pacific Dawn.*

Comments on Widow Rockfish QS

Comment 30: One commenter noted that while the draft regulatory language extends the prohibition on transferability of widow rockfish QS, it does not provide for the limited exception that would address outcomes of court actions such as might occur in probate or bankruptcy. The commenter requested that the regulations be clarified to state that any prohibition on the transferability of widow rockfish QS would also be subject to the current limited exception that allows transferability under a U.S. court order or authorization as approved by NMFS.

Response: NMFS agrees with the commenter that the regulations should be clarified to state that the current exception applies to transfer of widow rockfish QS and has modified the regulatory language, as described below. The existing prohibition on QS transferability allows for transferability under the limited exception raised by the commenter. The extension of the prohibition on transferability of widow rockfish QS should have more explicitly included the extension of the limited exception.

Change From the Proposed Rule

This rule extends the moratorium on transfer of widow rockfish QS in the IFQ fishery indefinitely, pending reconsideration of the allocation of QS for widow rockfish. In response to a public comment, a change has been made for the final rule to clarify that transfer of widow rockfish QS may be allowed under U.S. court order or authorization, and as approved by NMFS. This is consistent with the current transfer exception for QS or IBQ between QS accounts at § 660.140(d)(3)(ii)(B)(*2*). NMFS will make this change at § 660.140(d)(3)(ii)(B)(*2*). Additionally, two minor changes were made for clarity in § 660.140(d)(4)(v) and in § 660.150(g)(3)(i)(D).

Classification

Pursuant to section 304(b)(1)(A) of the MSA, the NMFS has determined that this final rule is consistent with the Groundfish FMP, the MSA, and other applicable law. To the extent that the regulations in this rule differ from what was deemed by the Council, NMFS invokes its independent authority under 16 U.S.C. 1855(d).

NMFS finds good cause to waive the 30-day delay in effectiveness pursuant to 5 U.S.C. 553(d)(3), so that this final rule is effective on April 1, 2013. As described in the preamble to the proposed rule (78 FR 72, January 2, 2013), the initial allocations of whiting to the shorebased IFQ and mothership sectors were challenged in *Pacific Dawn.* On February 21, 2012, the court in that case issued an order remanding

the regulations establishing the initial allocations of whiting for the shorebased IFQ fishery and the at-sea mothership fishery ''for further consideration.'' The order requires NMFS to implement revised regulations before the 2013 Pacific whiting fishing season begins on April 1, 2013. Waiving the 30-day delay in effectiveness is necessary to comply with the court-ordered deadline. Reconsideration of the initial allocations was a significant undertaking that required development and consideration of different alternatives, review of new information, development of new analyses, and preparation of draft and final environmental assessments and proposed regulations through the Pacific Fishery Management Council, which held three Council meetings and took public comment at all of them. NMFS and the Council devoted substantial effort and resources to accomplish this reconsideration by April 1, including providing a 30-day comment period on the proposed rule to allow time for public comment. Except for the portion of § 660.140(d)(3)(ii)(B)(2) that addresses widow rockfish, the regulatory revisions contained within this rule reinstate certain provisions that were suspended by temporary action (77 FR 45508, August 1, 2012; 78 FR 3848, January 17, 2013) pending reconsideration of the initial allocations and, as specified in the regulatory text, do not actually affect regulated entities until January 1, 2014, at the earliest. Thus, there is more than sufficient time for the public to become aware of and to come into compliance with or take other actions regarding these provisions. Some provisions of this rule (e.g. allowing participants in the program to transfer quota and requiring divestiture of quota in excess of accumulation limits) were components of the original program implemented under Amendment 20 to the FMP (*see* 75 FR 78344; Dec. 15, 2010) that NMFS delayed until it could respond to the court order. The public is well aware of these measures and does not need to come into compliance with them within the next 30 days. NMFS previously provided for a 30-day delay in effectiveness of these measures when it issued the rule implementing Amendment 20. In addition, for the portion of § 660.140(d)(3)(ii)(B)(2) that continues the current restriction on transfer of widow rockfish quota shares, the public is aware that this prohibition is in place under the temporary actions cited above and as such, do not require any additional time to prepare to comply with the restriction. For the above reasons, there is good cause under 5 U.S.C. 553(d)(3) to establish an effective date less than 30 days after date of publication.

NMFS prepared an Environmental Assessment (EA) for the reconsideration of initial whiting allocation and concluded that there will be no significant impact on the human environment as a result of this rule. NMFS prepared a finding of no significant impact (FONSI) which can be found in Section 6.2 of the EA. A copy of the EA is available on NMFS' Web site at *http://www.nwr.noaa.gov/Groundfish-Halibut/Groundfish-Fishery-Management/Trawl-Program/index.cfm.* Aspects related to this action were previously discussed in the final environmental impact statement (EIS) for Amendment 20 to the Pacific Coast Groundfish FMP which discussed the structure and features of the original trawl rationalization program.

This final rule has been determined to be not significant for purposes of Executive Order 12866.

A Regulatory Impact Review (RIR) was prepared on the action in its entirety and is included as part of the final regulatory flexibility analysis (FRFA) on the regulatory changes. The FRFA and RIR describe the impact this rule will have on small entities. The FRFA incorporates the IRFA, a summary of the significant issues raised by the public comments in response to the IRFA, and NMFS responses to those comments, and a summary of the analyses completed to support the action. A copy of the FRFA is available from NMFS (*see* **ADDRESSES**) and a summary of the FRFA, per the requirements of 5 U.S.C. 604(a), follows:

No significant issues were raised by the public comments that were directed to the IRFA itself. However, economic issues were raised in the comments to the Proposed Rule. These mainly concerned the application of the MSA criteria for determining allocations. These issues are addressed in the comments above. Although not directed to the IRFA, there was one comment that touched on the effects on leasing for small companies. This is addressed above in Comment 15.

Reconsideration of Initial Allocation of Whiting

The Council considered four alternatives for allocating whiting. The following analysis compares the No Action Alternative to Alternative 4 as they show greatest differences between the pre-control date fishery and post-control date fishery. The No Action Alternative allocates whiting using the years 1994 to 2003 for harvesters (shoreside and mothership) and 1998–2004 for processors. Alternative 4 allocates whiting using the years 2000–2010 for both harvesters (shoreside and mothership) and processors.

Over the years 1994–2010, there were 65 fishing permit holders that participated in the shoreside fishery and 37 permit holders that participated in the mothership fishery. Over the years 1998 to 2010, there were 17 processors that participated in the fishery and that meet the recent participation criteria of the various alternatives. For quota share purposes there are 17 potential processing plants based on fish ticket information. After taking into account ownership and affiliation relationships, there are 12 processing entities based on SBA definitions. Of these 12 processing entities, there are nine small processing entities and three large processing entities that are affected by this rule. Comparing the No Action Alternative to Alternative 4 in terms of 2011 ex-vessel revenues, information on the gainers and losers in each of these affected groups can be developed from information in the Environmental Assessment (EA). The allocation of 98,000 mt to the 2011 shorebased whiting fishery was worth approximately $21 million (ex-vessel value). Based on the No Action Alternative allocations, eighty percent of these quota pounds were allocated to fishing permits ($17 million) and 20 percent to the shorebased processors ($4 million). The allocation of 57,000 mt whiting to the whiting mothership catcher vessels was worth $12 million in ex-vessel value. It is important to note that 2011 was a peak year for the shorebased fishery and a near-peak year for the mothership fishery (see Figure 3–5 of the EA). (Note: although ex-processor or ''first wholesale'' revenues are higher than ex-vessel values and would be a better indicator of processing activity levels, data on ex-processor sales were not readily available for use by the Council. A better indicator of the gains and losses by groups would be changes in profits (revenues less operating costs)).

The Northwest Fisheries Science Center (NWFSC) has developed an estimate of economic net revenue that is an indicator of profits. Economic net revenue seeks to measure economic profit, which includes the opportunity costs of operating a commercial fishing vessel. The NWFSC collected and assessed 2008 cost-earning data on vessels participating in the shoreside groundfish fisheries including whiting. Vessels that participate in the shoreside whiting fishery are typically classified as either ''whiting'' vessels or ''Alaska'' vessels depending on whether or not

they operated in Alaska. Whiting vessels are defined as those with at least $100,000 revenue, of which at least 33% comes from whiting. Alaska vessels are defined as those vessels that earned at least $100,000 in revenue of which at least 50% comes from Alaska fisheries. Based on the responses received, whiting vessels earned 37% of their revenue from West Coast-caught whiting in 2008, Alaska vessels 46%. The average economic net revenue of a whiting vessel in 2008 was $167,457, which represents 19.2% of revenue from all fisheries. Limited entry trawl vessels classified as Alaska vessels had an average economic net revenue of $493,915, 28.3% of the $1,744,793 revenue earned from all sources by these vessels. These estimates are based on revenue and cost information directly related to the operation of a commercial fishing vessel such as those associated with office space. Revenues are from West Coast landings, Alaska landings, at-sea deliveries, sale and leasing of permits, chartering for research purposes and other activities related to the operation of the vessel. Compared to other years, these estimates may be high as whiting revenues and overall groundfish revenues were at their highest annual level during the 2001–2010 period during 2008. However, crab revenues during 2008 on the West Coast were at their lowest level since 2003.

Compared with the No Action Alternative, under Alternative 4 approximately 17% ($3.7 million) of the allocation to shorebased catcher vessels would be transferred away from the No Action Alternative/status quo holders; twenty eight permit holders would gain quota share including six permits that did not qualify under the No Action Alternative (Table 4–4 of the EA). The largest gain by a single permit holder is 3.3% ($700,000). Alternative 4 would lead to 37 permits losing quota share including 12 permits that would not receive any quota share. The largest loss by a single permit holder would be 2.0% of quota share ($340,000). A total of 41 out of 65 permits will see a change of less than $100,000 (increase or decrease) in revenues in comparing Alternative 4 to the No Action Alternative.

In comparing Alternative 4 to the No Action Alternative for shorebased processors, approximately 2.7% ($567,000) of the shoreside allocation of $21 million would be transferred away from the No Action/status quo holders; ten processing plants would gain, including seven processing plants that did not qualify under the No Action Alternative (Table 4–29 of the EA). The largest gain by a single plant is 1.0% of quota share ($214,000). Alternative 4 would lead to seven processing plants losing quota share including three plants that would not receive any quota share. The largest loss by a single plant is 0.9% of quota share ($189,000). Twelve out of 17 processing plants would see a change of less than $100,000. (Note—The Draft EA used processor counts that included one processor that operated four processing plants. Each of these four plants established a QS account and received separate processors' QS allocations under No Action—status quo. For this analysis, especially in regards to estimating impacts on communities, it was decided each of these four processing plants should be treated separately. This treatment changes the number of processors that were active in the fishery at some point during 1994–2010 from 16 to 19 (see, for example, Figure 4–13 in the EA). However, two of those processing plants are no longer in existence and so did not receive processors' QS allocations under No Action—status quo. Consequently in the Final EA's displays that include counts of processors receiving QS allocations under the alternatives, the processor count is reduced from 19 to 17 (see, for example, Table 4–30 in the EA).)

In comparing Alternative 4 to the No Action Alternative for whiting mothership catcher vessels, approximately 18% ($2 million) of the total catch history assignment would be transferred away from the status quo holders; 16 mothership catcher vessel endorsed permits would gain (Table 4–16 of the EA). No new permits would qualify. The largest gain by a single permit holder would be 4.5% of catch history assignment ($545,000). Alternative 4 would lead to 21 permits with reduced catch history assignments, including 10 permits that would not receive any catch history assignment. The largest loss by a single catch history assignment holder would be 2.7% ($333,000). Eighteen out of 36 permits would see a change of less than $100,000.

In terms of net economic benefit to the nation, the effects of the alternatives are similar. According to the Pacific States Marine Fisheries Council (PSMFC's) Scientific and Statistical Committee:

> The way the fisheries are actually prosecuted (geographic location of fishing and landings, timing of fishing, and participants) will, in the long-term, tend not to be affected by who receives the initial allocation of catch shares. Over time, the use of the catch shares will likely migrate through leases or sales to the participants who can put them to their most profitable use. This means that the eventual biological, ecological, and economic performance of the fisheries will be relatively independent of the initial allocation of catch shares. It has been the experience of many catch share programs that such transitions occur rather quickly, often within the first few years. As a consequence, the initial allocation of quota shares is not an effective tool to direct fishing or processing effort to particular geographic locations.

The initial allocation of whiting is a one-time distribution of wealth in the form of quota shares and catch history assignments to members of the fishing industry. The initial allocation is essentially the granting of a capital asset that will affect harvester and processor competitiveness and assist existing participants in the transition to the new management system. To the degree that the initial allocation matches up with the harvesters that will use the quota, transition costs and disruption will be lessened as the fishery moves to its long-term, more efficient state.

Similarly, those processors who receive an initial allocation may experience a boost in their competitive advantage due to the infusion of new wealth (the value of the QS received). The initial allocation does not affect the long-term efficiency and operation of the fishery. However, liquidity constraints, and perhaps other unknown constraints, may mean that there are some short-term inefficiencies. For example, this one time distribution of wealth may affect expenditures in the communities depending on location and spending patterns of recipients of these quota shares and catch history assignments. The EA provides the following regarding impacts on communities:

> The effects of the initial allocations on the distribution of fishing among communities are difficult to predict. Quota is tradable and highly divisible, giving it a fluidity such that it will likely move toward those ports in which profit margins tend to be the highest, regardless of the initial allocations. Where profit margins are similar, allocations given to entities that are already invested in whiting fishery-dependent capital assets are likely to stay with those entities at least in the near term. Similarly, where profit margins are similar, there will likely be some tendency in the near term for quota that is traded to move toward locations where whiting fishery-dependent capital assets already exist. Regardless of how the quota is distributed, vessels may move operations between ports during the year based on the geographic distribution of fishing opportunities. Processors are likely to use their shares in the port in which their facilities are located, however, some processors have facilities in more than one port and so may shift harvest between ports in response to the location of fishing

opportunities. At the same time, the recent shift of harvest toward more northern ports appears to be a response to investments in those ports, indicating that the location of fish is not the only factor driving the location of landings. Over the long term, it is expected that operations will move, or quota will be traded, to the ports in which the highest profits can be earned, taking into account all forms of costs such as average distance to fishing grounds and catch and bycatch rates.

While the discussion above concerns the long term efficiency and operation of the fishery, short term distributional effects matter to NMFS and the Council. The initial allocation of quota shares affects each participant's business operation, investments, and community. With the choice of the No Action Alternative over alternatives that reflect more recent history, NMFS and the Council are providing to those who have historically participated in the fishery (the majority of which are also recent participants) a potentially better chance to benefit from the market processes described above.

RAW 1

This action also would revise several regulations that were delayed on an emergency basis in response to the Court order. RAW 1 delayed the ability to transfer QS and IBQ between QS accounts in the shorebased IFQ fishery, and to the ability to sever mothership/catcher vessel endorsement and its associated catch history assignment (CHA) from limited entry trawl permits in the mothership fishery, pending the outcome of the reconsideration.

NMFS postponed the ability to trade quota shares as well as the ability of mothership catcher vessels to trade their endorsements and catch history assignments separately from their limited entry permits. NMFS also postponed all trading of QS species/species groups because for many affected parties, their QS allocations (especially for bycatch species) are a composite of whiting-trip calculations and non-whiting trip calculations. Postponing these activities, while NMFS and the Council reconsidered the whiting allocation, minimized confusion and disruption in the fishery from trading quota shares that have not yet been firmly established by regulation. For example, if QS trading was not delayed, QS permit owners would be transferring QS amounts that potentially could change (increase or decrease) after the reconsideration.

For similar reasons, NMFS also delayed the ability to transfer a mothership catcher vessel (MS/CV) endorsement and associated catch history assignment from one limited entry trawl permit to another in the mothership sector. The ability to sell or trade a limited entry permit with the endorsement and catch history remains. The use of the catch history assignment to be assigned to a co-op to be fished continues. These delays were expected to be temporary in nature and to benefit both small and large entities as they help smooth the transition to any changes in how Pacific whiting is allocated, and reduce the uncertainty to existing and potential new holders of these allocations.

With these revised regulations, those who find themselves with excess QS (except for widow QS) and IBQ, have until November 30, 2015, to divest. MS/CV-endorsed limited entry trawl permit owners will have to divest themselves of ownership in permits in excess of the accumulation limits by August 31, 2016. This rule allows limited entry trawl permit holders in the mothership sector to request a change (or transfer) of MS/CV endorsement and its associated CHA beginning September 1, 2014. Finally, this rule allows transfer of QS or IBQ, except widow rockfish QS, between QS permit holders beginning January 1, 2014.

The Small Business Administration has established size criteria for all major industry sectors in the U.S., including fish harvesting and fish processing businesses. A business involved in fish harvesting is a small business if it is independently owned and operated and not dominant in its field of operation (including its affiliates) and if it has combined annual receipts not in excess of $4.0 million for all its affiliated operations worldwide. A seafood processor is a small business if it is independently owned and operated, not dominant in its field of operation, and employs 500 or fewer persons on a full time, part time, temporary, or other basis, at all its affiliated operations worldwide. A business involved in both the harvesting and processing of seafood products is a small business if it meets the $4.0 million criterion for fish harvesting operations. A wholesale business servicing the fishing industry is a small business if it employs 100 or fewer persons on a full time, part time, temporary, or other basis, at all its affiliated operations worldwide. For marinas and charter/party boats, a small business is one with annual receipts not in excess of $7.0 million.

NMFS now collects small business information as part of its permit renewal processes. For quota share purposes there are 17 potential processing plants based on fish ticket information. After taking into account ownership and affiliation relationships, there are 12 processing entities based on SBA definitions. Of these 12 processing entities, there are nine small processing entities and three large processing entities that are affected by this rule. Sixteen of the limited entry trawl permits that participated in the shorebased whiting fishery are associated with large companies and 49 of these permits are associated with small companies. In the mothership fishery, 14 catcher vessel permits are associated with large companies and 23 with small companies. When permits associated with the shoreside fishery and the mothership fisheries are combined, there are 66 limited entry permits of which 21 are associated with large companies. Given the review of the various alternatives, the amount of ex-vessel revenues that may change hands, and how each alternative differs slightly in the mixture of large and small entities that qualify for whiting quota share, maintaining the No Action/status quo allocations should not have a significant economic impact on a substantial number of small entities.

No Federal rules have been identified that duplicate, overlap, or conflict with the action.

Section 212 of the Small Business Regulatory Enforcement Fairness Act of 1996 states that, for each rule or group of related rules for which an agency is required to prepare a FRFA, the agency shall publish one or more guides to assist small entities in complying with the rule, and shall designate such publications as ''small entity compliance guides.'' The agency shall explain the actions a small entity is required to take to comply with a rule or group of rules. As part of this rulemaking process, a public notice that also serves as small entity compliance guide was prepared. Copies of this final rule and public notice are available from NMFS Northwest Regional Office, and are posted on its Web site (*http://www.nwr.noaa.gov/fisheries/management/about_groundfish/index.html*), and will be emailed to members of our groundfish fishery email listserve.

NMFS issued Biological Opinions under the Endangered Species Act (ESA) on August 10, 1990, November 26, 1991, August 28, 1992, September 27, 1993, May 14, 1996, and December 15, 1999, pertaining to the effects of the Pacific Coast groundfish fisheries on Chinook salmon (Puget Sound, Snake River spring/summer, Snake River fall, upper Columbia River spring, lower Columbia River, upper Willamette River, Sacramento River winter, Central Valley spring, California coastal), coho salmon (Central California coastal,

southern Oregon/northern California coastal), chum salmon (Hood Canal summer, Columbia River), sockeye salmon (Snake River, Ozette Lake), and steelhead (upper, middle and lower Columbia River, Snake River Basin, upper Willamette River, central California coast, California Central Valley, south/central California, northern California, southern California). These biological opinions have concluded that implementation of the Pacific Coast groundfish fishery is not expected to jeopardize the continued existence of any endangered or threatened species under the jurisdiction of NMFS, or result in the destruction or adverse modification of critical habitat.

NMFS issued a Supplemental Biological Opinion on March 11, 2006, concluding that neither the higher observed bycatch of Chinook in the 2005 whiting fishery nor new data regarding salmon bycatch in the groundfish bottom trawl fishery required a reconsideration of its prior ''no jeopardy'' conclusion. NMFS also reaffirmed its prior determination that implementation of the Groundfish FMP is not likely to jeopardize the continued existence of any of the affected ESUs. Lower Columbia River coho (70 FR 37160, June 28, 2005) and Oregon Coastal coho (73 FR 7816, February 11, 2008) were relisted as threatened under the ESA. The 1999 biological opinion concluded that the bycatch of salmonids in the Pacific whiting fishery were almost entirely Chinook salmon, with little or no bycatch of coho, chum, sockeye, and steelhead.

On December 7, 2012, NMFS completed a biological opinion concluding that the groundfish fishery is not likely to jeopardize non-salmonid marine species including listed eulachon, green sturgeon, humpback whales, Steller sea lions, and leatherback sea turtles. The opinion also concludes that the fishery is not likely to adversely modify critical habitat for green sturgeon and leatherback sea turtles. An analysis included in the same document as the opinion concludes that the fishery is not likely to adversely affect green sea turtles, olive ridley sea turtles, loggerhead sea turtles, sei whales, North Pacific right whales, blue whales, fin whales, sperm whales, Southern Resident killer whales, Guadalupe fur seals, or the critical habitat for Steller sea lions.

As Steller sea lions and humpback whales are also protected under the Marine Mammal Protection Act, incidental take of these species from the groundfish fishery must be addressed under MMPA section 101(a)(5)(E). On February 27, 2012, NMFS published notice that the incidental taking of Steller sea lions in the West Coast groundfish fisheries was addressed in NMFS' December 29, 2010, Negligible Impact Determination (NID) and this fishery has been added to the list of fisheries authorized to take Steller sea lions (77 FR 11493, Feb. 27, 2012). NMFS is currently developing MMPA authorization for the incidental take of humpback whales in the fishery.

On November 21, 2012, the U.S. Fish and Wildlife Service (FWS) issued a biological opinion concluding that the groundfish fishery will not jeopardize the continued existence of the short-tailed albatross. The (FWS) also concurred that the fishery is not likely to adversely affect the marbled murrelet, California least tern, southern sea otter, bull trout, nor bull trout critical habitat.

Pursuant to Executive Order 13175, this rule was developed after meaningful consultation and collaboration, through the Council process, with the tribal representative on the Council. The revised regulations have no direct effect on the tribes.

List of Subjects in 50 CFR Part 660

Fisheries, Fishing, and Indian fisheries.

Dated: March 22, 2013.

Alan D. Risenhoover,

Director, Office of Sustainable Fisheries, performing the functions and duties of the Deputy Assistant Administrator for Regulatory Programs, National Marine Fisheries Service.

For the reasons stated in the preamble, 50 CFR part 660 is amended as follows:

PART 660—FISHERIES OFF WEST COAST STATES

■ 1. The authority citation for part 660 continues to read as follows:

Authority: 16 U.S.C. 1801 *et seq.,* 16 U.S.C. 773 *et seq.,* and 16 U.S.C. 7001 *et seq.*

■ 2. In § 660.140, revise paragraphs (d)(3)(ii)(B)(*2*) and (d)(4)(v) to read as follows:

§ 660.140 Shorebased IFQ Program.

* * * * *

(d) * * *

(3) * * *

(ii) * * *

(B) * * *

(*2*) *Transfer of QS or IBQ between QS accounts.* Beginning January 1, 2014, QS permit owners may transfer QS (except for widow rockfish QS) or IBQ to another QS permit owner, subject to accumulation limits and approval by NMFS. QS or IBQ is transferred as a percent, divisible to one-thousandth of a percent (i.e., greater than or equal to 0.001%). Until January 1, 2014, QS or IBQ cannot be transferred to another QS permit owner, except under U.S. court order or authorization and as approved by NMFS. QS or IBQ may not be transferred between December 1 through December 31 each year. QS or IBQ may not be transferred to a vessel account. The prohibition on transferability of widow rockfish QS is extended indefinitely pending final action on reallocation of widow rockfish QS, except under U.S. court order or authorization and as approved by NMFS.

* * * * *

(4) * * *

(v) *Divestiture.* Accumulation limits will be calculated by first calculating the aggregate non-whiting QS limit and then the individual species QS or IBQ control limits. For QS permit owners (including any person who has ownership interest in the owner named on the permit) that are found to exceed the accumulation limits during the initial issuance of QS permits, an adjustment period will be provided during which they will have to completely divest their QS or IBQ in excess of the accumulation limits. QS or IBQ will be issued for amounts in excess of accumulation limits only for owners of limited entry permits as of November 8, 2008, if such ownership has been registered with NMFS by November 30, 2008. The owner of any permit acquired after November 8, 2008, or if acquired earlier, not registered with NMFS by November 30, 2008, will only be eligible to receive an initial allocation for that permit of those QS or IBQ that are within the accumulation limits; any QS or IBQ in excess of the accumulation limits will be redistributed to the remainder of the initial recipients of QS or IBQ in proportion to each recipient's initial allocation of QS or IBQ for each species. Any person that qualifies for an initial allocation of QS or IBQ in excess of the accumulation limits will be allowed to receive that allocation, but must divest themselves of the QS (except for widow rockfish QS) or IBQ in excess of the accumulation limits by November 30, 2015. Holders of QS or IBQ in excess of the control limits may receive and use the QP or IBQ pounds associated with that excess, up to the time their divestiture is completed. Once the divestiture period is completed, any QS or IBQ held by a person (including any person who has ownership interest in the owner named on the permit) in excess of the accumulation limits will be revoked and

redistributed to the remainder of the QS or IBQ owners in proportion to the QS or IBQ. On or about January 1, 2016, NMFS will redistribute the revoked QS or IBQ excess percentages to the QS or IBQ owners in proportion to their QS or IBQ holdings based on ownership records as of January 1, 2016. No compensation will be due for any revoked shares.

* * * * *

■ 3. In § 660.150,

■ a. Revise paragraphs (g)(2)(iv)(B), add paragraph (g)(2)(iv)(C), and revise (g)(3)(i)(D) to read as follows:

§ 660.150 Mothership (MS) Coop Program.

* * * * *

(g) * * *

(2) * * *

(iv) * * *

(B) *Application.* NMFS will begin accepting applications for a change in MS/CV endorsement registration beginning September 1, 2014. A request for a change in MS/CV endorsement registration must be made between September 1 and December 31 of each year. Any transfer of MS/CV endorsement and its associated CHA to another limited entry trawl permit must be requested using a Change in Registration of a Mothership/Catcher Vessel Endorsement/Catch History Assignment Application form and the permit owner or an authorized representative of the permit owner must certify that the application is true and correct by signing and dating the form. In addition, the form must be notarized, and the permit owner selling the MS/CV endorsement and its CHA must provide the sale price of the MS/CV endorsement and its associated CHA. If any assets in addition to the MS/CV endorsement and its associated CHA are included in the sale price, those assets must be itemized and described.

(C) *Effective date.* Any change in MS/CV endorsement registration from one limited entry trawl permit to another limited entry trawl permit will be effective on January 1 in the year following the application period.

* * * * *

(3) * * *

(i) * * *

(D) *Divestiture.* For MS/CV-endorsed permit owners that are found to exceed the accumulation limits during the initial issuance of MS/CV-endorsed permits, an adjustment period will be provided during which they will have to completely divest of ownership in permits that exceed the accumulation limits. Any person that NMFS determines, as a result of the initial issuance of MS/CV-endorsed permits, to own in excess of 20 percent of the total catch history assignment in the MS Coop Program applying the individual and collective rule described at § 660.150(g)(3)(i)(A) will be allowed to receive such permit(s), but must divest themselves of the excess ownership by August 31, 2016. Owners of such permit(s) may receive and use the MS/CV-endorsed permit(s), up to the time their divestiture is completed. After August 31, 2016, any MS/CV-endorsed permits owned by a person (including any person who has ownership interest in the owner named on the permit) in excess of the accumulation limits will not be issued (renewed) until the permit owner complies with the accumulation limits.

[FR Doc. 2013–07162 Filed 3–27–13; 8:45 am]

BILLING CODE 3510–22–P

DEPARTMENT OF COMMERCE

National Oceanic and Atmospheric Administration

50 CFR Part 679

[Docket No. 111213751–2102–02]

RIN 0648–XC596

Fisheries of the Exclusive Economic Zone Off Alaska; Pacific Cod by Catcher Vessels Less Than 60 feet (18.3 meters) Length Overall Using Jig or Hook-and-Line Gear in the Bogoslof Pacific Cod Exemption Area in the Bering Sea and Aleutian Islands Management Area

AGENCY: National Marine Fisheries Service (NMFS), National Oceanic and Atmospheric Administration (NOAA), Commerce.

ACTION: Temporary rule; closure.

SUMMARY: NMFS is prohibiting directed fishing for Pacific cod by catcher vessels less than 60 feet (18.3 meters (m)) length overall (LOA) using jig or hook-and-line gear in the Bogoslof Pacific cod exemption area of the Bering Sea and Aleutian Islands management area (BSAI). This action is necessary to prevent exceeding the limit of Pacific cod for catcher vessels less than 60 feet (18.3 m) LOA using jig or hook-and-line gear in the Bogoslof Pacific cod exemption area in the BSAI.

DATES: Effective 1200 hours, Alaska local time (A.l.t.), March 25, 2013, through 2400 hours, A.l.t., December 31, 2013.

FOR FURTHER INFORMATION CONTACT: Obren Davis, 907–586–7228.

SUPPLEMENTARY INFORMATION: NMFS manages the groundfish fishery in the BSAI according to the Fishery Management Plan for Groundfish of the Bering Sea and Aleutian Islands Management Area (FMP) prepared by the North Pacific Fishery Management Council under authority of the Magnuson-Stevens Fishery Conservation and Management Act. Regulations governing fishing by U.S. vessels in accordance with the FMP appear at subpart H of 50 CFR part 600 and 50 CFR part 679.

In accordance with § 679.22(a)(7)(i)(C), the Administrator, Alaska Region, NMFS (Regional Administrator), has determined that 113 metric tons of Pacific cod have been caught by catcher vessels less than 60 feet (18.3 m) LOA using jig or hook-and-line gear in the Bogoslof exemption area described at § 679.22(a)(7)(i)(C)(*1*). Consequently, the Regional Administrator is prohibiting directed fishing for Pacific cod by catcher vessels less than 60 feet (18.3 m) LOA using jig or hook-and-line gear in the Bogoslof Pacific cod exemption area.

After the effective date of this closure the maximum retainable amounts at § 679.20(e) and (f) apply at any time during a trip.

Classification

This action responds to the best available information recently obtained from the fishery. The Assistant Administrator for Fisheries, NOAA (AA), finds good cause to waive the requirement to provide prior notice and opportunity for public comment pursuant to the authority set forth at 5 U.S.C. 553(b)(B) and § 679.25(c)(1)(ii) as such requirement is impracticable and contrary to the public interest. This requirement is impracticable and contrary to the public interest as it would prevent NMFS from responding to the most recent fisheries data in a timely fashion and would delay the closure of Pacific cod by catcher vessels less than 60 feet (18.3 m) LOA using jig or hook-and-line gear in the Bogoslof Pacific cod exemption area. NMFS was unable to publish a notice providing time for public comment because the most recent, relevant data only became available as of March 22, 2013.

The AA also finds good cause to waive the 30-day delay in the effective date of this action under 5 U.S.C. 553(d)(3). This finding is based upon the reasons provided above for waiver of prior notice and opportunity for public comment.

This action is required by § 679.22 and is exempt from review under Executive Order 12866.

Authority: 16 U.S.C. 1801 *et seq.*

Dated: March 25, 2013.

Kara Meckley,

Acting Deputy Director, Office of Sustainable Fisheries, National Marine Fisheries Service.

[FR Doc. 2013–07246 Filed 3–25–13; 4:15 pm]

BILLING CODE 3510–22–P

Proposed Rules

Federal Register

Vol. 78, No. 60

Thursday, March 28, 2013

This section of the FEDERAL REGISTER contains notices to the public of the proposed issuance of rules and regulations. The purpose of these notices is to give interested persons an opportunity to participate in the rule making prior to the adoption of the final rules.

DEPARTMENT OF AGRICULTURE

Agricultural Marketing Service

7 CFR Part 28

[AMS–CN–12–0074]

RIN 0581–AD30

User Fees for 2013 Crop Cotton Classification Services to Growers

AGENCY: Agricultural Marketing Service, USDA.

ACTION: Proposed rule.

SUMMARY: The Agricultural Marketing Service (AMS) is proposing to maintain user fees for cotton producers for 2013 crop cotton classification services under the Cotton Statistics and Estimates Act at the same level as in 2012. These fees are also authorized under the Cotton Standards Act of 1923. The 2012 crop user fee was $2.20 per bale, and AMS proposes to continue the fee for the 2013 cotton crop at that same level. This proposed fee and the existing reserve are sufficient to cover the costs of providing classification services for the 2013 crop, including costs for administration and supervision.

DATES: Comments must be received on or before April 12, 2013.

ADDRESSES: Interested persons may comment on the proposed rule using the following procedures:

- *Internet: http://www.regulations.gov.*
- *Mail:* Comments may be submitted by mail to: Darryl Earnest, Deputy Administrator, Cotton & Tobacco Programs, AMS, USDA, 3275 Appling Road, Room 11, Memphis, TN 38133. Comments should be submitted in triplicate. All comments should reference the docket number and the date and the page of this issue of the **Federal Register**. All comments will be available for public inspection during regular business hours at Cotton & Tobacco Program, AMS, USDA, 3275 Appling Road, Memphis, TN 38133. A copy of this notice may be found at: *www.ams.usda.gov/cotton/rulemaking.htm.*

FOR FURTHER INFORMATION CONTACT: Darryl Earnest, Deputy Administrator, Cotton & Tobacco Programs, AMS, USDA, 3275 Appling Road, Room 11, Memphis, TN 38133. Telephone (901) 384–3060, facsimile (901) 384–3021, or email *darryl.earnest@ams.usda.gov.*

SUPPLEMENTARY INFORMATION:

Executive Order 12866

This proposed rule has been determined to be not significant for purposes of Executive Order 12866; and, therefore has not been reviewed by the Office of Management and Budget (OMB).

Executive Order 12988

This proposed rule has been reviewed under Executive Order 12988, Civil Justice Reform. It is not intended to have retroactive effect. There are no administrative procedures that must be exhausted prior to any judicial challenge to the provisions of this rule.

Regulatory Flexibility Act

Pursuant to requirements set forth in the Regulatory Flexibility Act (RFA) (5 U.S.C. 601–612), AMS has considered the economic impact of this action on small entities and has determined that its implementation will not have a significant economic impact on a substantial number of small businesses.

The purpose of the RFA is to fit regulatory actions to the scale of businesses subject to such actions so that small businesses will not be disproportionately burdened. There are an estimated 25,000 cotton growers in the U.S. who voluntarily use the AMS cotton classing services annually, and the majority of these cotton growers are small businesses under the criteria established by the Small Business Administration (13 CFR 121.201). Continuing the user fee at the 2012 crop level as stated will not significantly affect small businesses as defined in the RFA because:

(1) The fee represents a very small portion of the cost per-unit currently borne by those entities utilizing the services. (The 2012 user fee for classification services was $2.20 per bale; the fee for the 2013 crop would be maintained at $2.20 per bale; the 2013 crop is estimated at 13,250,000 bales);

(2) The fee for services will not affect competition in the marketplace;

(3) The use of classification services is voluntary. For the 2012 crop, 16,240,000 bales were produced; and, almost all of these bales were voluntarily submitted by growers for the classification service; and

(4) Based on the average price paid to growers for cotton from the 2011 crop of 0.885 cents per pound, 500 pound bales of cotton are worth an average of $442.50 each. The proposed user fee for classification services, $2.20 per bale, is less than one half percent of the value of an average bale of cotton.

Paperwork Reduction Act

In compliance with OMB regulations (5 CFR part 1320), which implement the Paperwork Reduction Act (PRA) (44 U.S.C. 3501), the information collection requirements contained in the provisions to be amended by this proposed rule have been previously approved by OMB and were assigned OMB control number 0581–0008, Cotton Classing, Testing, and Standards.

Fees for Classification Under the Cotton Statistics and Estimates Act of 1927

This proposed rule would maintain a 2012 user fee of $2.20 per bale charged to producers for cotton classification for the 2013 cotton crop. This fee is set at the same level as the 2012 user fee. The 2013 user fee was set in accordance to section 14201 of the Food, Conservation, and Energy Act of 2008 (Pub. L. 110–234) (2008 Farm Bill). Section 14201 of the 2008 Farm Bill provides that: (1) The Secretary shall make available cotton classification services to producers of cotton, and provide for the collection of classification fees from participating producers or agents that voluntarily agree to collect and remit the fees on behalf of the producers; (2) classification fees collected and the proceeds from the sales of samples submitted for classification shall, to the extent practicable, be used to pay the cost of the services provided, including administrative and supervisory costs; (3) the Secretary shall announce a uniform classification fee and any applicable surcharge for classification services not later than June 1 of the year in which the fee applies; and (4) in establishing the amount of fees under this section, the Secretary shall consult with representatives of the United States

cotton industry. At pages 313–314, the Joint Explanatory Statement of the committee of conference for section 14201 stated the expectation that the cotton classification fee would be established in the same manner as was applied during the 1992 through 2007 fiscal years. Specifically, it states that the classification fee should continue to be a basic, uniform fee per bale fee as determined necessary to maintain cost-effective cotton classification service. Further, in consulting with the cotton industry, the Secretary should demonstrate the level of fees necessary to maintain effective cotton classification services and provide the Department of Agriculture with an adequate operating reserve, while also working to limit adjustments in the year-to-year fee.

Under the provisions of section 14201, a user fee (dollar amount per bale classed) is proposed for the 2013 cotton crop that, when combined with other sources of revenue, will result in projected revenues sufficient to reasonably cover budgeted costs—adjusted for inflation—and allow for adequate operating reserves to be maintained. Costs considered in this method include salaries, costs of equipment and supplies, and other overhead costs, such as facility costs and costs for administration and supervision. In addition to covering expected costs, the user fee is set such that projected revenues will generate an operating reserve adequate to effectively manage uncertainties related to crop size and cash-flow timing. Furthermore, the operating reserve is expected to meet minimum reserve requirements set by the Agricultural Marketing Service, which require maintenance of a reserve fund amount equal to at least four months of projected operating costs.

The user fee proposed to be charged cotton producers for cotton classification in 2013 is $2.20 per bale, which is the same fee charged for the 2012 crop. This fee is based on the preseason projection that 13,250,000 bales will be classed by the United States Department of Agriculture during the 2013 crop year.

Accordingly, § 28.909, paragraph (b) would reflect the continuation of the cotton classification fee at $2.20 per bale.

As provided for in the 1987 Act, a 5 cent per bale discount would continue to be applied to voluntary centralized billing and collecting agents as specified in § 28.909(c).

Growers or their designated agents receiving classification data would continue to incur no additional fees if classification data is requested only once. The fee for each additional retrieval of classification data in § 28.910 would remain at 5 cents per bale. The fee in § 28.910(b) for an owner receiving classification data from the National Database would remain at 5 cents per bale, and the minimum charge of $5.00 for services provided per monthly billing period would remain the same. The provisions of § 28.910(c) concerning the fee for new classification memoranda issued from the National Database for the business convenience of an owner without reclassification of the cotton will remain the same at 15 cents per bale or a minimum of $5.00 per sheet.

The fee for review classification in § 28.911 would be maintained at $2.20 per bale.

The fee for returning samples after classification in § 28.911 would remain at 50 cents per sample.

A 15-day comment period is provided for public comments. This period is appropriate because user fees are not changing and it is anticipated that the proposed fees, if adopted, would be made effective for the 2013 cotton crop on July 1, 2013.

List of Subjects in 7 CFR Part 28

Administrative practice and procedure, Cotton, Cotton samples, Grades, Market news, Reporting and record keeping requirements, Standards, Staples, Testing, Warehouses.

For the reasons set forth in the preamble, 7 CFR part 28 is proposed to be amended to read as follows:

PART 28—[AMENDED]

■ 1. The authority citation for 7 CFR part 28, Subpart D, continues to read as follows:

Authority: 7 U.S.C. 51–65; 7 U.S.C. 471–476.

■ 2. In § 28.909, paragraph (b) is revised to read as follows:

§ 28.909 Costs.

* * * * *

(b) The cost of High Volume Instrument (HVI) cotton classification service to producers is $2.20 per bale.

* * * * *

■ 3. In § 28.911, the last sentence of paragraph (a) is revised to read as follows:

§ 28.911 Review classification.

(a) * * * The fee for review classification is $2.20 per bale.

* * * * *

Dated: March 22, 2013.

David R. Shipman,

Administrator, Agricultural Marketing Service.

[FR Doc. 2013–07181 Filed 3–27–13; 8:45 am]

BILLING CODE 3410–02–P

DEPARTMENT OF AGRICULTURE

Agricultural Marketing Service

7 CFR Part 905

[Doc. No. AO–13–0163; AMS–FV–12–0069; FV13–905–1]

Oranges, Grapefruit, Tangerines, and Tangelos Grown in Florida; Hearing on Proposed Amendment of Marketing Order No. 905

AGENCY: Agricultural Marketing Service, USDA.

ACTION: Notice of hearing on proposed rulemaking.

SUMMARY: Notice is hereby given of a public hearing to receive evidence on proposed amendments to Marketing Order No. 905 (order), that regulates the handling of oranges, grapefruit, tangerines, and tangelos (citrus) grown in Florida. Nine amendments are proposed by the Citrus Administrative Committee (committee), which is responsible for local administration of the order. These proposed amendments would: authorize regulation of new varieties and hybrids of citrus fruit, authorize the regulation of intrastate shipments of fruit, revise the process for redistricting the production area, change the term of office and tenure requirements for committee members, authorize mail balloting procedures for committee membership nominations, increase the capacity of financial reserve funds, authorize pack and container requirements for domestic shipments and authorize different regulations for different markets, eliminate the use of separate acceptance statements in the nomination process, and require handlers to register with the committee.

In addition, the Agricultural Marketing Service (AMS) proposes to make any such changes as may be necessary to the order to conform to any amendment that may result from the hearing. These proposed amendments are intended to update the order to reflect past changes in the industry and potential future changes, and to improve the operation and administration of the order.

DATES: The hearing dates are April 24, 2013, 9:00 a.m. to 5:00 p.m.; and continuing on April 25, 2013, at 9:00

a.m., if necessary, in Winter Haven, Florida.

ADDRESSES: The hearing will be held at the Florida Department of Agriculture and Consumer Services, 500 3rd Street NW., Winter Haven, Florida 33881.

FOR FURTHER INFORMATION CONTACT: Melissa Schmaedick, Marketing Order and Agreement Division, Fruit and Vegetable Program, AMS, USDA, Post Office Box 952, Moab, UT 84532; Telephone: (202) 557–4783, Fax: (435) 259–1502, or Michelle Sharrow, Marketing Order and Agreement Division, Fruit and Vegetable Program, AMS, USDA, 1400 Independence Avenue SW., Stop 0237, Washington, DC 20250–0237; Telephone: (202) 720–2491, Fax: (202) 720–8938, or Email: *Melissa.Schmaedick@ams.usda.gov* or *Michelle.Sharrow@ams.usda.gov.*

Small businesses may request information on this proceeding by contacting Jeffrey Smutny, Marketing Order and Agreement Division, Fruit and Vegetable Program, AMS, USDA, 1400 Independence Avenue SW., Stop 0237, Washington, DC 20250–0237; Telephone: (202) 720–2491, Fax: (202) 720–8938, or Email: *Jeffrey.Smutny@ams.usda.gov.*

SUPPLEMENTARY INFORMATION: This administrative action is instituted pursuant to the Agricultural Marketing Agreement Act of 1937, as amended (7 U.S.C. 601–674), hereinafter referred to as the ''Act.'' This action is governed by the provisions of sections 556 and 557 of title 5 of the United States Code and, therefore, is excluded from the requirements of Executive Order 12866.

The Regulatory Flexibility Act (5 U.S.C. 601–612) seeks to ensure that within the statutory authority of a program, the regulatory and informational requirements are tailored to the size and nature of small businesses. Interested persons are invited to present evidence at the hearing on the possible regulatory and informational impacts of the proposals on small businesses.

The amendments proposed herein have been reviewed under Executive Order 12988, Civil Justice Reform. They are not intended to have retroactive effect.

The Act provides that administrative proceedings must be exhausted before parties may file suit in court. Under section 608c(15)(A) of the Act, any handler subject to an order may file with USDA a petition stating that the order, any provision of the order, or any obligation imposed in connection with the order is not in accordance with law and request a modification of the order or to be exempted therefrom. A handler is afforded the opportunity for a hearing on the petition. The Act provides that the district court of the United States in any district in which the handler is an inhabitant, or has his or her principal place of business, has jurisdiction to review the USDA's ruling on the petition, provided an action is filed not later than 20 days after the date of the entry of the ruling.

The hearing is called pursuant to the provisions of the Act and the applicable rules of practice and procedure governing the formulation of marketing agreements and orders (7 CFR part 900).

The proposed amendments were recommended by the committee on July 17, 2012, and submitted to USDA on October 25, 2012. After reviewing the proposals and other information submitted by the committee, USDA made a determination to schedule this matter for hearing.

The proposed amendments to the order recommended by the committee are summarized as follows:

1. Amend the definitions of ''fruit'' and ''variety'' in § 905.4 and § 905.5 to update terminology and authorize regulation of additional varieties and hybrids of citrus.

2. Amend the definition of ''handle or ship'' in § 905.9 to authorize regulation of intrastate shipments.

3. Amend § 905.14 to revise the process for redistricting the production area.

4. Amend § 905.20 to change the term of office of committee members from one to two years, and change the tenure requirements for committee members from three to four years.

5. Amend § 905.22 to authorize mail balloting procedures for committee membership nominations.

6. Amend § 905.42 to authorize the committee to increase the capacity of its financial reserve funds from approximately six months of a fiscal period's expenses to approximately two years' fiscal period's expenses.

7. Amend § 905.52 to authorize pack and container requirements for domestic shipments and authorize different regulations for different markets.

8. Amend § 905.28 to eliminate the use of separate acceptance statements in the nomination process.

9. Amend § 905.7 to require handlers to register with the committee.

The committee works with USDA in administering the order. These proposals submitted by the committee have not received the approval of USDA. The committee believes that its proposed amendments would update the order to address changes that have occurred in the industry and potential changes that could occur in the future. The amendments are intended to improve the operation and administration of the order.

In addition to the proposed amendments to the order, AMS proposes to make any such changes as may be necessary to the order to conform to any amendment that may result from the hearing.

The public hearing is held for the purpose of: (i) Receiving evidence about the economic and marketing conditions which relate to the proposed amendments of the order; (ii) determining whether there is a need for the proposed amendments to the order; and (iii) determining whether the proposed amendments or appropriate modifications thereof will tend to effectuate the declared policy of the Act.

Testimony is invited at the hearing on all the proposals and recommendations contained in this notice, as well as any appropriate modifications or alternatives.

All persons wishing to submit written material as evidence at the hearing should be prepared to submit four copies of such material at the hearing. Four copies of prepared testimony for presentation at the hearing should also be made available. To the extent practicable, eight additional copies of evidentiary exhibits and testimony prepared as an exhibit should be made available to USDA representatives on the day of appearance at the hearing. Any requests for preparation of USDA data for this rulemaking hearing should be made at least 10 days prior to the beginning of the hearing.

From the time the notice of hearing is issued and until the issuance of a final decision in this proceeding, USDA employees involved in the decisional process are prohibited from discussing the merits of the hearing issues on an *ex parte* basis with any person having an interest in the proceeding. The prohibition applies to employees in the following organizational units: Office of the Secretary of Agriculture; Office of the Administrator, AMS; Office of the General Counsel; and the Fruit and Vegetable Program, AMS. Procedural matters are not subject to the above prohibition and may be discussed at any time.

List of Subjects in 7 CFR Part 905

Grapefruit, Marketing agreements, Oranges, Reporting and recordkeeping requirements, Tangelos, Tangerines.

PART 905—ORANGES, GRAPEFRUIT, TANGERINES, AND TANGELOS GROWN IN FLORIDA

■ 1. The authority citation for 7 CFR part 905 continues to read as follows:

Authority: 7 U.S.C. 601–674.

■ 2. Testimony is invited on the following proposals or appropriate alternatives or modifications to such proposals.

Proposals submitted by the Citrus Administrative Committee:

Proposal Number 1

■ 3. Revise § 905.4 to read as follows:

§ 905.4 Fruit.

Fruit means any or all varieties of the following types of citrus fruits grown in the production area:

(a) Citrus sinensis, Osbeck, commonly called ''oranges'';

(b) Citrus paradisi, MacFadyen, commonly called ''grapefruit'';

(c) Citrus reticulata, commonly called ''tangerines'' or ''mandarin'';

(d) C.grandis (L.); Osbeck, commonly called ''pummelo''; and,

(e) ''Citrus hybrids'' that are hybrids between or among one or more of the four fruits (a) through (d) of this section and the following: trifoliate orange (Poncirus trifoliate), sour orange (C. aurantium), lemon (C. limon), lime (C. aurantifolia), citron (C. medica), kumquat (Fortunella, species), tangelo (C. reticulata x C. paradisi or C. grandis), tangor (C. reticulata x C. sinensis), and varieties of these species. In addition, citrus hybrids include: tangelo (C. reticulata x C. paradisi or C. grandis), tangor (C. reticulata x C. sinensis), and temple oranges, and varieties thereof.

■ 4. Revise § 905.5 to read as follows:

§ 905.5 Variety.

Variety or *varieties* means any one or more of the following classifications or groupings of fruit:

(a) Oranges;

(1) Early and Midseason oranges

(2) Valencia, Lue Gim Gong, and similar late maturing oranges of the Valencia type;

(3) Navel oranges

(b) Grapefruit;

(1) Red Grapefruit, to include all shades of color

(2) White Grapefruit

(c) Tangerines and Mandarins;

(1) Dancy and similar tangerines

(2) Robinson tangerines

(3) Honey tangerines

(4) Fallglo tangerines

(5) US Early Pride tangerines

(6) Sunburst tangerines

(7) W-Murcott tangerines

(8) Tangors

(d) Pummelos;

(1) Hirado Buntan and other pink seeded pummelos

(e) Citrus Hybrids;

(1) Tangelos

(i) Orlando Tangelo

(ii) Minneola Tangelo

(2) Temple Oranges

(f) Other varieties of citrus fruits specified in 905.4, including hybrids, as recommended and approved by the Secretary: *Provided,* That in order to add any hybrid variety of citrus fruit to be regulated under this provision, such variety must exhibit similar characteristics and be subject to cultural practices common to existing regulated varieties.

Proposal Number 2

■ 5. Revise § 905.9 to read as follows:

§ 905.9 Handle or Ship.

Handle or *ship* means to sell, transport, deliver, pack, prepare for market, grade, or in any other way to place fruit in the current of commerce within the production area or between any point in the production area and any point outside thereof.

Proposal Number 3

■ 6. Revise § 905.14 to read as follows:

§ 905.14 Redistricting.

The committee may, with the approval of the Secretary, redefine the districts into which the production area is divided or reapportion or otherwise change the grower membership of districts, or both: *Provided,* That the membership shall consist of at least eight but not more than nine grower members, and any such change shall be based, insofar as practicable, upon the respective averages for the immediately preceding three fiscal periods of: (1) The number of bearing trees in each district; (2) the volume of fresh fruit produced in each district; (3) the total number of acres of citrus in each district; and (4) other relevant factors. Each redistricting or reapportionment shall be announced on or prior to March 1 preceding the effective fiscal period.

Proposal Number 4

■ 7. Revise § 905.20 to read as follows:

§ 905.20 Term of Office.

The term of office of members and alternate members shall begin on the first day of August of even-numbered years and continue for two years and until their successors are selected and have qualified. The consecutive terms of office of a member shall be limited to two terms. The terms of office of alternate members shall not be so limited. Members, their alternates, and their respective successors shall be nominated and selected by the Secretary as provided in § 905.22 and § 905.23.

Proposal Number 5

■ 8. In § 905.22 revise paragraphs (a)(1) and (b)(1) and add a new paragraph (c) to read as follows:

§ 905.22 Nominations.

(a) *Grower members.* (1) The committee shall give public notice of a meeting of producers in each district to be held not later than June 10th of even-numbered years, for the purpose of making nominations for grower members and alternate grower members. The committee, with the approval of the Secretary, shall prescribe uniform rules to govern such meetings and the balloting thereat. The chairman of each meeting shall publicly announce at such meeting the names of the persons nominated, and the chairman and secretary of each such meeting shall transmit to the Secretary their certification as to the number of votes so cast, the names of the persons nominated, and such other information as the Secretary may request. All nominations shall be submitted to the Secretary on or before the 20th day of June.

(2) * * *

(b) *Shipper members.* (1) The committee shall give public notice of a meeting for bona fide cooperative marketing organizations which are handlers, and a meeting for other handlers who are not so affiliated, to be held not later than June 10th of even-numbered years, for the purpose of making nominations for shipper members and their alternates. The committee, with the approval of the Secretary, shall prescribe uniform rules to govern each such meeting and the balloting thereat. The chairperson of each such meeting shall publicly announce at the meeting the names of the persons nominated and the chairman and secretary of each such meeting shall transmit to the Secretary their certification as to the number of votes cast, the weight by volume of those shipments voted, and such other information as the Secretary may request. All nominations shall be submitted to the Secretary on or before the 20th day of June.

(2) * * *

(c) Notwithstanding the provisions of paragraphs (a) and (b) of this section, nomination and election of members and alternate members to the committee may be conducted by mail, electronic

mail, or other means according to rules and regulations recommended by the committee and approved by the Secretary.

Proposal Number 6

■ 9. In § 905.42 revise the first sentence of paragraph (a) to read as follows:

§ 905.42 Handler's accounts.

(a) If, at the end of a fiscal period, the assessments collected are in excess of expenses incurred, the committee, with the approval of the Secretary, may carry over such excess into subsequent fiscal periods as a reserve: *Provided,* That funds already in the reserve do not exceed approximately two fiscal period's expenses. * * *

Proposal Number 7

■ 10. In § 905.52 revise paragraphs (a)(4) and (a)(5) to read as follows:

§ 905.52 Issuance of regulations.

(a) * * *

(4) Establish, prescribe, and fix the size, capacity, weight, dimensions, marking (including labels and stamps), or pack of the container or containers which may be used in the packaging, transportation, sale, shipment, or other handling of fruit: *Provided,* That such regulation shall not authorize the use of any container or markings which are prohibited under Florida statutes and regulations effective thereunder.

(5) Provide that any or all requirements effective pursuant to paragraphs (a) (1), (2), (3), and (4) of this section applicable to the handling of fruit may be different for the handling of fruit within the production area, the handling of fruit for export, or for the handling of fruit between the production area and any point outside thereof within the United States: *Provided,* That such requirements shall not authorize the handling of fruit in any way that is prohibited under Florida statutes and regulations effective thereunder.

* * * * *

Proposal Number 8

■ 11. Revise § 905.28 to read as follows:

§ 905.28 Qualification and Acceptance.

Any person nominated to serve as a member or alternate member of the committee shall, prior to selection by the Secretary, qualify by filing a written qualification and acceptance statement indicating such person's qualifications and willingness to serve in the position for which nominated.

Proposal Number 9

■ 12. Revise § 905.7 to read as follows:

§ 905.7 Handler.

Handler is synonymous with *shipper* and means any person (except a common or contract carrier transporting fruit for another person) who, as owner, agent, or otherwise, handles fruit in fresh form, or causes fruit to be handled. Each handler shall be registered with the committee pursuant to rules recommended by the committee and approved by the Secretary.

Proposal submitted by USDA:

Proposal Number 10

Make other such changes as may be necessary to the order to conform with any amendment thereto that may result from the hearing.

Dated: March 22, 2013.

Rex A. Barnes,

Acting Administrator, Agricultural Marketing Service.

[FR Doc. 2013–07180 Filed 3–27–13; 8:45 am]

BILLING CODE 3410–02–P

BUREAU OF CONSUMER FINANCIAL PROTECTION

12 CFR Part 1090

[Docket No. CFPB–2013–0005]

RIN 3170–AA35

Defining Larger Participants of the Student Loan Servicing Market

AGENCY: Bureau of Consumer Financial Protection.

ACTION: Proposed rule; request for public comment.

SUMMARY: The Bureau of Consumer Financial Protection (Bureau or CFPB) proposes to amend the regulation defining larger participants of certain consumer financial product and service markets by adding a new section to define larger participants of a market for student loan servicing. The Bureau proposes this rule pursuant to its authority, under the Dodd-Frank Wall Street Reform and Consumer Protection Act, to supervise certain nonbank covered persons for compliance with Federal consumer financial law and for other purposes. The Bureau has the authority to supervise nonbank covered persons of all sizes in the residential mortgage, private education lending, and payday lending markets. In addition, the Bureau has the authority to supervise nonbank ''larger participant[s]'' of markets for other consumer financial products or services, as the Bureau defines by rule. The proposal (Proposed Rule) would identify a market for student loan servicing and define ''larger participants'' of this market that would be subject to the Bureau's supervisory authority.

DATES: Comments must be received on or before May 28, 2013.

ADDRESSES: Interested parties are invited to submit written comments electronically or in paper form. Because paper mail in the Washington, DC area and at the Bureau is subject to delay, commenters are encouraged to submit comments electronically. You may submit comments, identified by *Docket No. CFPB–2013–0005* or RIN 3170–AA35, by any of the following methods:

- *Electronic: http://www.regulations.gov.* Follow the instructions for submitting comments. In general, all comments received will be posted without change to their content.
- *Mail/Hand Delivery/Courier:* Monica Jackson, Office of the Executive Secretary, Bureau of Consumer Financial Protection, 1700 G Street NW., Washington, DC 20552.

In addition, comments will be available for public inspection and copying at 1700 G Street NW., Washington, DC 20552, on official business days between the hours of 10 a.m. and 5 p.m. Eastern Time. You can make an appointment to inspect the documents by telephoning (202) 435–7275.

All comments, including attachments and other supporting materials, will become part of the public record and will be subject to public disclosure. Submit only information that you wish to make available publicly. Do not include sensitive personal information, such as account numbers or Social Security numbers. Comments will not be edited to remove any identifying or contact information, such as name and address information, email addresses, or telephone numbers.

FOR FURTHER INFORMATION CONTACT: Christopher Young, Senior Counsel, (202) 435–7408, or Jolina Cuaresma, Attorney-Advisor, (202) 435–9212, Office of Supervision Policy, Bureau of Consumer Financial Protection, 1700 G Street NW., Washington, DC 20552.

SUPPLEMENTARY INFORMATION:

I. Overview

Title X of the Dodd-Frank Wall Street Reform and Consumer Protection Act (Dodd-Frank Act) [1] established the Bureau on July 21, 2010. Under 12 U.S.C. 5514, the Bureau has supervisory authority over all nonbank covered

[1] Public Law 111–203 (codified at 12 U.S.C. 5301 *et seq.*).

persons[2] offering or providing three enumerated types of consumer financial products or services: (1) Origination, brokerage, or servicing of consumer loans secured by real estate, and related mortgage loan modification or foreclosure relief services; (2) private education loans; and (3) payday loans.[3] The Bureau also has supervisory authority over ''larger participant[s] of a market for other consumer financial products or services,'' as the Bureau defines by rule.[4]

This Proposed Rule, if adopted, would be the third in a series of rulemakings to define larger participants of markets for other consumer financial products or services for purposes of 12 U.S.C. 5514(a)(1)(B).[5] The Proposed Rule would establish the Bureau's supervisory authority over certain nonbank covered persons participating in a market for student loan servicing.[6]

The Bureau is authorized to supervise nonbank covered persons subject to 12 U.S.C. 5514 of the Dodd-Frank Act for purposes of: (1) Assessing compliance with Federal consumer financial law; (2) obtaining information about such persons' activities and compliance systems or procedures; and (3) detecting and assessing risks to consumers and consumer financial markets.[7] The Bureau conducts examinations, of various scopes, of supervised entities. In addition, the Bureau may, as appropriate, request information from supervised entities without conducting examinations.[8]

The Bureau prioritizes supervisory activity at nonbank covered persons on the basis of risk, taking into account, among other factors, the size of each entity, the volume of its transactions involving consumer financial products or services, the size and risk presented by the product market in which it is a participant, the extent of relevant State oversight, and any field and market information that the Bureau has on the entity. Such field and market information might include, for example, information from complaints and any other information the Bureau has about risks to consumers.

The specifics of how an examination takes place vary by market and entity. However, the examination process generally proceeds as follows. Bureau examiners initiate an on-site examination by contacting an entity for an initial conference with management, and often by also requesting records and other information. Bureau examiners will ordinarily also review the components of the supervised entity's compliance management system. Based on these discussions and a preliminary review of the information received, examiners determine the scope of an on-site examination and then coordinate with the entity to initiate the on-site portion of the examination. While on-site, examiners spend a period of time holding discussions with management about the entity's policies, processes, and procedures; reviewing documents and records; testing transactions and accounts for compliance; and evaluating the entity's compliance management systems. As with any Bureau examination, examinations of nonbanks may involve issuing confidential examination reports, supervisory letters, and compliance ratings.

The Bureau has published a general examination manual describing the Bureau's supervisory approach and procedures. This manual is available on the Bureau's Web site.[9] As explained in the manual, examinations will be structured to address various factors related to a supervised entity's compliance with Federal consumer financial law and other relevant considerations. On December 17, 2012, the Bureau released procedures specific to education lending and servicing for use in the Bureau's examinations.[10] If this Proposed Rule is adopted, the Bureau also plans to use those examination procedures in supervising nonbank larger participants of the student loan servicing market.

This Proposed Rule would establish a category of covered persons that are subject to the Bureau's supervisory authority under 12 U.S.C. 5514 by defining ''larger participants'' of a market for student loan servicing.[11] The Proposed Rule pertains only to that purpose and would not impose new substantive consumer protection requirements. Nonbank covered persons generally are subject to the Bureau's regulatory and enforcement authority, and any applicable Federal consumer financial law, regardless of whether they are subject to the Bureau's supervisory authority.

II. Summary of Proposed Rule

The Bureau's existing larger-participant rule, 12 CFR part 1090, prescribes various procedures, definitions, standards, and protocols that apply with respect to all markets in which the Bureau has defined larger participants.[12] Those generally applicable provisions, which are codified in subpart A, would also be applicable for the student loan servicing market described by this Proposed Rule. The definitions in § 1090.101 should be used, unless otherwise specified, when interpreting terms in this Proposed Rule.

As the Bureau has previously explained, it will include relevant market descriptions and larger-participant tests, as it develops them, in subpart B.[13] Accordingly, the Proposed Rule defining larger participants of the student loan servicing market would become § 1090.106 in subpart B.

[2] The provisions of 12 U.S.C. 5514 apply to certain categories of covered persons, described in subsection (a)(1), and expressly exclude from coverage persons described in 12 U.S.C. 5515(a) or 5516(a). ''Covered persons'' include ''(A) any person that engages in offering or providing a consumer financial product or service; and (B) any affiliate of a person described [in (A)] if such affiliate acts as a service provider to such person.'' 12 U.S.C. 5481(6).

[3] 12 U.S.C. 5514(a)(1)(A), (D), (E). The Bureau also has the authority to supervise any nonbank covered person that it ''has reasonable cause to determine, by order, after notice to the covered person and a reasonable opportunity * * * to respond * * * is engaging, or has engaged, in conduct that poses risks to consumers with regard to the offering or provision of consumer financial products or services.'' 12 U.S.C. 5514(a)(1)(C). In addition, the Bureau has supervisory authority over very large depository institutions and credit unions and their affiliates. 12 U.S.C. 5515(a). Furthermore, the Bureau has certain authorities relating to the supervision of other depository institutions and credit unions. 12 U.S.C. 5516(c)(1), (e). The Bureau notes that one of the Bureau's mandates under the Dodd-Frank Act is to ensure that ''Federal consumer financial law is enforced consistently without regard to the status of a person as a depository institution, in order to promote fair competition.'' 12 U.S.C. 5511(b)(4).

[4] 12 U.S.C. 5514(a)(1)(B), (a)(2); *see also* 12 U.S.C. 5481(5) (defining ''consumer financial product or service'').

[5] The first two rules defined larger participants of markets for consumer reporting, 77 FR 42874 (July 20, 2012) (Consumer Reporting Rule), and for consumer debt collection, 77 FR 65775 (Oct. 31, 2012) (Consumer Debt Collection Rule).

[6] The Proposed Rule would describe one market for consumer financial products or services, which the Proposed Rule labels ''student loan servicing.'' The proposed definition would not encompass all activities that could be considered student loan servicing. Any reference herein to ''the student loan servicing market'' means only the particular market for student loan servicing identified by the Proposed Rule.

[7] 12 U.S.C. 5514(b)(1).

[8] *See* 12 U.S.C. 5514(b) (authorizing the Bureau both to conduct examinations and to require reports from entities subject to supervision).

[9] CFPB Supervision and Examination Manual (October 1, 2012), *available at http://www.consumerfinance.gov/guidance/supervision/manual/.*

[10] CFPB Supervision and Examination Manual, Education Loan Examination Manual (December 17, 2012), *available at http://files.consumerfinance.gov/f/201212_cfpb_educationloanexamprocedures.pdf.*

[11] The Bureau's supervision authority also extends to service providers of those covered persons that are subject to supervision under 12 U.S.C. 5514. 12 U.S.C. 5514(e); *see also* 12 U.S.C. 5481(26) (defining ''service provider'').

[12] 12 CFR 1090.100–103.

[13] 77 FR 42874, 42875 (Consumer Reporting Rule); 77 FR 65775, 65777 (Consumer Debt Collection Rule).

The Proposed Rule would be the latest in a series of rules to define ''larger participants'' of specific markets for purposes of establishing, in part, the scope of coverage of the Bureau's nonbank supervision program. The Proposed Rule would define a student loan servicing market that would cover the servicing of both Federal and private student loans.[14] Under the Proposed Rule, ''student loan servicing'' would mean the collection and processing of loan payments on behalf of holders of promissory notes and, during periods when payments are deferred, maintaining of account records and communicating with borrowers on behalf of loan holders, as well as interactions with borrowers that facilitate such collection and processing of loan payments and maintaining of account records and communicating with borrowers. The Proposed Rule would also set forth a test that determines whether a nonbank covered person is a larger participant of the student loan servicing market.

To identify the larger participants of this market that would be subject to the Bureau's supervision authority, the Bureau is proposing a test based on the number of accounts on which an entity performs student loan servicing. The Proposed Rule would define the criterion ''account volume,'' which reflects the number of accounts for which an entity and its affiliated companies were responsible as of December 31 of the prior calendar year.[15] An entity would be a larger participant if its account volume exceeded one million. As prescribed by existing § 1090.102, any nonbank covered person that qualified as a larger participant would remain a larger participant until two years after the first day of the tax year in which the person last met the applicable test.[16]

Pursuant to existing § 1090.103, a person would be able to dispute whether it qualifies as a larger participant in the student loan servicing market. The Bureau would notify an entity when the Bureau intended to undertake supervisory activity; the entity would then have an opportunity to submit documentary evidence and written arguments that it was not a larger participant. Section 1090.103(d) provides that the Bureau may require submission of certain records, documents, and other information for purposes of assessing whether a person is a larger participant of a covered market; this authority would be available to the Bureau for facilitating its identification of larger participants of the student loan servicing market, just as in other markets.

III. Legal Authority and Procedural Matters

A. Rulemaking Authority

The Bureau is issuing this Proposed Rule pursuant to its authority under: (1) 12 U.S.C. 5514(a)(1)(B) and (a)(2), which authorize the Bureau to supervise larger participants of markets for consumer financial products or services, as defined by rule; (2) 12 U.S.C. 5514(b)(7), which, among other things, authorizes the Bureau to prescribe rules to facilitate the supervision of covered persons under 12 U.S.C. 5514; and (3) 12 U.S.C. 5512(b)(1), which grants the Bureau the authority to prescribe rules as may be necessary and appropriate to enable the Bureau to administer and carry out the purposes and objectives of Federal consumer financial law, and to prevent evasions of such law.

B. Proposed Effective Date of Final Rule

The Administrative Procedure Act generally requires that rules be published not less than 30 days before their effective dates.[17] The Bureau proposes that the final rule arising from this Proposed Rule would be effective at least 60 days after publication.

IV. Section-By-Section Analysis

Subpart B—Markets

Section 1090.106—Student Loan Servicing Market

Proposed § 1090.106 relates to student loan servicing. Servicing, in general, is the day-to-day management of loans on behalf of loan holders. Servicers' duties typically include, for example, maintaining account records, billing borrowers for amounts due, collecting and allocating payments, reporting to creditors or investors, and pursuing collection and loss mitigation activities with respect to delinquent borrowers. The student loan servicing market is comprised of entities that service Federal and private student loans that have been disbursed to pay for post-secondary education expenses.[18] Students may obtain Federal student loans to fund their own post-secondary education expenses; a parent or guardian of a student may also obtain certain Federal student loans to fund that student's post-secondary education expenses.[19] A private student loan may be available to any individual willing to help secure funding for post-secondary education expenses.

Servicers handle three main types of post-secondary education loans on which borrowers still have outstanding balances; only two of these categories of loans are still available for new originations. First, some outstanding loans were made under the Federal Family Education Loan Program (FFELP).[20] FFELP loans were funded by private lenders, guaranteed by State governmental or not-for-profit entities, and reinsured by the Federal government. These loans are either serviced by the loan holders themselves or serviced pursuant to contracts with the loan holders. FFELP loans constituted the vast majority of Federal student loans before 2010. Second, pursuant to the 2010 SAFRA Act, FFELP ended and the Department of Education became the primary lender for Federal student loans, providing loans directly to borrowers under the William D. Ford Federal Direct Loan Program.[21] Direct loans are serviced by entities that contract with the Department of Education pursuant to Title IV of the Higher Education Act.[22] These entities are known as Title IV Additional Servicers (TIVAS).[23] Third,

[14] As discussed below, student loans include those under Title IV of the Higher Education Act of 1965, 20 U.S.C. 1070 *et seq.,* and those that are otherwise extended to a consumer in order to pay post-secondary education expenses.

[15] Although the Bureau proposes to use account volume as the criterion for the student loan servicing market, that criterion is not necessarily appropriate for any other market that may be the subject of a future rulemaking. As the Bureau explained in the Consumer Reporting Rule and the Consumer Debt Collection Rule, the Bureau expects to tailor each test to the market to which it will be applied. 77 FR 42874, 42876; 77 FR 65775, 65778.

[16] 12 CFR 1090.102.

[17] 5 U.S.C. 553(d).

[18] Throughout this notice of proposed rulemaking, the terms ''student loan'' and ''post-secondary education loan'' are used interchangeably.

[19] *See* 20 U.S.C. 1078–2 (describing the PLUS program which, among other things, permits parents to obtain loans to pay for the cost of their children's education). A borrower who has one or more outstanding student loans may sometimes take out a new loan to refinance and consolidate those existing student loans. For purposes of the Proposed Rule, such a refinancing would also be considered a student loan.

[20] 20 U.S.C. 1078(b), (c).

[21] *See* Public Law 111–152, §§ 2101–2213, 124 Stat. 1071 (2010). The Direct Loan Program actually began in 1992, *see* Public Law 102–325, 106 Stat. 569 (1992), but Federal Direct loans constituted only a small portion of Federal student lending before the enactment of the SAFRA Act in 2010. Two additional Federal programs under Title IV also authorize student loans. One offers grants to those who pledge to become teachers. If the recipients do not become teachers, then the disbursed funds are converted from grants to loans. *See* 20 U.S.C. 1070g *et seq.* A second finances loans made directly by certain post-secondary education institutions through their financial aid offices. *See* 20 U.S.C. 1087aa *et seq.*

[22] 20 U.S.C. 1087f(b).

[23] Most of the initial Direct loan servicing business went to one entity: Affiliated Computer

the student loan market includes private student loans, made without Federal involvement. Private student loans are usually serviced by the originating institutions, by the TIVAS, or by other nonbank entities.

The student loan servicing market includes fewer than 50 nonbanks, and the market is heavily concentrated at the upper tier.[24] As measured either by unpaid principal balance or by number of borrowers with loans being serviced, five nonbanks, the TIVAS, account for between approximately 67 percent and 88 percent of activity in the market.[25] There are only a few nonbanks in the middle tier of this market, each with slightly greater than 1 percent market share. Many of these firms service loans placed with them by smaller nonbanks that are in the lowest tier of the market.[26] Finally, the lowest tier of the market has a few dozen smaller nonbanks, each of which has only a fraction of a percent in market share.[27] Many of these smaller nonbanks are not-for-profit entities run by States, and at least half of them contract to other firms the servicing of the loans for which they have servicing rights. Entities in the middle tier of the market conduct most of this subcontracted servicing.[28]

Outstanding student loan debt—measured by unpaid principal balance at approximately $1.1 trillion as of the end of 2012—is the largest category of non-mortgage debt in the United States.[29] Published tuition and fees at public four-year institutions have increased on average at an annual rate of 5.2 percent per year above the general rate of inflation over the past decade.[30] In light of the rising cost of obtaining post-secondary education, American consumers have increasingly turned to student loans to bridge the gap between personal and family resources and the total cost of education. In fact, from the academic year 2001–2002 to 2011–2012, the average total borrowing per student increased by 55 percent.[31] The average student loan debt for 2011 graduates was $22,900.[32] During the last decade, a greater proportion of Americans than ever before pursued post-secondary education; from fall 2000 to fall 2010, the number of undergraduate students increased by 45 percent.[33] Thus, student loans are not only essential for many students to obtain post-secondary education; they are a significant part of the nation's economy.

Student loan servicers play a critical role in the student loan market. Student loan servicers manage interactions with borrowers on behalf of loan holders of outstanding student loans. Servicers receive scheduled periodic payments from borrowers pursuant to the terms of their loans and apply the payments of principal and interest and other such payments as may be required pursuant to the terms of the loans or of the contracts governing the servicers' work. Typically, student loan servicing also involves sending monthly payment statements, maintaining records of payments and balances, and answering borrowers' questions. When appropriate, servicers may also make borrowers aware of alternative payment arrangements such as consolidation loans or deferments.

Student loan servicers also play a role while students are still in school. A borrower may receive multiple disbursements of a loan over the course of one or more academic years. Repayment of the loan may be deferred until some future point, such as when the student finishes post-secondary education. A student loan servicer will maintain records of the amount lent to the borrower and of any interest that accrues; the servicer may also send

Services, Inc. (ACS). As the Department of Education began contracting with additional servicers, those additional servicers became Title IV additional servicers. In order to avoid confusion, when the Bureau uses the term TIVAS, the Bureau means to refer also to ACS, the original servicer of Federal Direct loans.

[24] The Bureau has estimated entity-level data for student loan servicers as of December 31, 2012, based mainly on the 2012 Student Loan Servicing Alliance (SLSA) Servicing Volume Survey, to which most servicers reported data as of December 31, 2011. To construct these estimates, the Bureau augmented the data from SLSA's Servicing Volume Survey in several ways. (1) For the servicers that elected not to report their servicing information to SLSA, the Bureau estimated their servicing volume using Department of Education reports, shareholder presentations, and other market information. (2) The Bureau forecasted the growth of the largest student loan servicers' portfolios of Federal Direct loans on the basis of the overall growth in Federal Direct loans of 11.8 percent in 2012. *See* U.S. Department of Education, Federal Student Aid Annual Report, p. 2 (2012). (3) The Bureau accounted for publicly reported market changes, including the Department of Education's borrower volume reallocations. (4) The Bureau also included in its estimate of a servicer's volume the borrowers for whose loans the servicer performs subservicing under contract with other servicers. The results of these calculations are entity-level estimates of total unpaid principal balance, borrower volume, and loan volume. These estimated data are cited hereinafter as ''2012 SLSA Servicing Volume Survey, augmented by CFPB estimates.'' Depository institutions and credit unions also service student loans, although they would not be covered under this Proposed Rule.

[25] *See* 2012 SLSA Servicing Volume Survey, augmented by CFPB estimates. As discussed below, the Bureau proposes to use account volume as the criterion that would determine whether an entity is a larger participant of the student loan servicing market. However, the Bureau does not have data directly on servicers' account volume, as the Proposed Rule would define the term. The Bureau has therefore estimated market share on the basis of both unpaid principal balance and number of borrowers.

For either method, the Bureau's data source presents potential uncertainties that make it difficult to produce precise market-share figures. Accordingly, the Bureau presents only a range of market-share estimates. The lower end of the range reflects the Bureau's estimate of market share on the basis of unpaid principal balance, using the Bureau's estimate of $1.1 trillion in outstanding student loan debt as the denominator. However, the Bureau believes SLSA's data may underestimate the amount of unpaid principal balance being serviced by the TIVAS. In particular, SLSA's data include the aggregate unpaid principal balance being serviced by both banks and nonbanks. For this reason, the actual market share of TIVAS, calculated on the basis of unpaid principal balance as a proportion of the balance serviced by nonbank participants in the student loan servicing market, may be larger than the lower end of the Bureau's range. The upper end of the presented range is the Bureau's estimate of market share on the basis of number of borrowers. The Bureau believes SLSA's data may underestimate the total number of borrowers in the market; the actual market share of the TIVAS may therefore be smaller than the Bureau's estimate. However, the Bureau does not expect these possible uncertainties regarding market structure to alter its conclusions about the operation of the Proposed Rule. As discussed below, the approximately seven entities that would qualify as larger participants under the Bureau's proposed test engage in substantially more market activity than the next largest participants, regardless of the details of how participation is assessed.

[26] *See* HCERA/SAFRA—Not-For-Profit (NFP) Servicer Program documentation, as of Dec. 6, 2012 (showing firms that contract servicing rights to other entities), *available at https://www.fbo.gov/spg/ED/FSA/CA/NFP-RFP-2010/listing.html.*

[27] *See* 2012 SLSA Servicing Volume Survey, augmented by CFPB estimates.

[28] *See* HCERA/SAFRA—Not-For-Profit (NFP) Servicer Program documentation, as of Dec. 6, 2012 (showing firms that contract servicing rights to other entities), *available at https://www.fbo.gov/spg/ED/FSA/CA/NFP-RFP-2010/listing.html.*

[29] As of September 30, 2012, the total Federal student aid loan portfolio amounted to $948 billion. U.S. Department of Education, Federal Student Aid Annual Report, p. 2 (2012), *available at http://www2.ed.gov/about/reports/annual/2012report/fsa-report.pdf.* The Department of Education and the Bureau have together estimated that American consumers owe more than $150 billion in outstanding private student loans. Consumer Financial Protection Bureau & Department of Education, Private Student Loans, p. 17 (Aug. 29, 2012) (report to the Sen. Comm. on Banking, Housing, and Urban Affairs, the Sen. Comm. on Health, Education, Labor, and Pensions, the H. Comm. on Financial Services, and the H. Comm. on Education and the Workforce), *available at http://files.consumerfinance.gov/f/201207_cfpb_Reports_Private-Student-Loans.pdf.* The Federal Reserve Bank of New York, using different data and methodology, separately estimates that outstanding student loan debt was $966 billion at the end of 2012. *See* Federal Reserve Bank of New York, Quarterly Report on Household Debt and Credit, p. 3 (Feb. 2013), *available at http://www.newyorkfed.org/research/national_economy/householdcredit/DistrictReport_Q42012.pdf*

[30] College Board Advocacy & Policy Center Report, Trends in College Pricing 2012, p. 7 (Oct. 2012).

[31] College Board Advocacy & Policy Center, Trends in Student Aid 2012, p. 4 (Oct. 2012).

[32] As reported in *Number of the Week: Class of 2011, Most Indebted Ever,* Wall Street Journal, May 7, 2011.

[33] College Board Advocacy & Policy Center, Trends in College Pricing 2012, p. 4 (Oct. 2012).

statements of such amounts to the borrower.

In addition, student loan servicers may collect payments and send statements after loans enter default. They may also report borrowers' account activity to consumer reporting agencies.

In short, most borrowers, once they have obtained their loans, conduct almost all transactions relating to their loans through student loan servicers.[34] The Proposed Rule would enable the Bureau to supervise larger participants of an industry that has a tremendous impact on the lives of post-secondary education students and former students, as well as their families.

Section 1090.106(a)—Market-Related Definitions

Unless otherwise specified, the definitions in § 1090.101 should be used when interpreting terms in this Proposed Rule. The Proposed Rule would define additional terms relevant to the student loan servicing market. These terms would include ''student loan servicing,'' the term that delineates the scope of the identified market; the terms ''post-secondary education expenses'' and ''post-secondary education loan''; and ''account volume,'' which the Proposed Rule would use as the criterion for assessing larger-participant status. The Bureau seeks comment on each of the definitions set forth in the Proposed Rule and any suggested clarifications, modifications, or alternatives.

Account volume. As discussed below, the Bureau proposes to use account volume as the criterion that would determine whether an entity is a larger participant of the student loan servicing market. Proposed § 1090.106(a) would define the term ''account volume'' as the number of accounts with respect to which a nonbank covered person is considered to perform student loan servicing, as calculated according to instructions set forth in the proposed regulation and as discussed below.

Account volume, as an initial matter, would be based on the number of students or prior students with respect to whom a covered person performs student loan servicing. For example, a servicer might service a post-secondary education loan made to a student at the beginning of the student's time in college and paid back over a number of years after the student completed college. As another example, a servicer might service a post-secondary education loan made to a parent of a student to fund that student's education expenses.[35] In each of these cases, the student whose post-secondary education expenses a loan funded would represent at least one account.

However, the Bureau is aware that in some situations, a student or prior student may correspond to more than one account at a given servicer. For example, if a nonbank covered person is servicing a loan to a student and also a loan to that student's parent, the servicer will maintain separate accounts for the two loans. The student and the parent will each receive separate statements regarding their loans, and the servicer will remit payments on the loans to their respective holders. As another example, a student may receive loans from two different originators; or a given originator may securitize loans to the student through two different securitization vehicles. These different holders of the student's loans may all retain the same servicer, who may maintain separate accounts for the different loans.[36] The servicer may send the student one consolidated statement or multiple statements, depending on the circumstances and its practices; and the servicer will remit payments on the loans to different loan holders.

To take account of such possibilities, the Bureau proposes to count, as an account, each separate stream of fees to which a servicer is entitled for servicing a post-secondary education loan with respect to a given student or prior student.[37] The Bureau believes that student loan servicers are generally compensated, on a monthly basis, at a fixed rate for each account they handle. For Federal Direct loans and Federally-owned FFELP loans, this compensation structure is determined by contract with the Department of Education, and the average fee rate for 2013 is $1.68 per month per account.[38] For loans held by private entities (both private loans and FFELP loans), the rate may vary depending on the contracts governing a given servicer's business. But the compensation structure appears to be common throughout the student loan servicing market.[39] The Bureau therefore expects that counting the number of streams of fees a servicer receives for servicing loans with respect to a given student will be an appropriate way to represent the scope of the servicer's business with respect to that student. The Bureau requests comment on the proposed method of counting accounts and suggested alternatives.

The number of accounts generally would be counted as of December 31 of the prior calendar year. In general, a loan originator may open an account for a borrower at the beginning of an academic year and then disburse funds for the student's expenses at various points throughout the year. An originator may allocate the borrower's account to a servicer at the beginning of the academic year, even though the originator will be making further disbursements. If a servicer is responsible for servicing loans with respect to a student as of December 31, the corresponding account would be included in the calculation of account volume.

The proposed definition would attribute to a covered person the sum of the number of accounts of the person and its affiliated companies. Under 12 U.S.C. 5514(a)(3)(B), the activities of affiliated companies are to be aggregated for purposes of computing activity levels for rules—like this Proposed Rule—under 12 U.S.C. 5514(a)(1). In the consumer reporting and consumer debt collection markets, the Bureau

[34] Activities of this type constitute ''servicing loans,'' a consumer financial product or service pursuant to the Dodd-Frank Act. *See* 12 U.S.C. 5481(15)(A)(i) (definition of ''financial product or service,'' including ''extending credit and servicing loans''); *see also* 12 U.S.C. 5481(5)(B) (definition of ''consumer financial product or service,'' including financial products or services provided in connection with consumer financial products, like education loans, that are provided to consumers).

[35] For example, under the Federal PLUS loan program, a student's parent or guardian may take out a loan to pay the student's expenses. *See* 20 U.S.C. 1078–2. In the private lending market, the Bureau understands that, subject to underwriting criteria, post-secondary education loans may be available to any person who wishes to support a student's education.

[36] In some instances, student loans that have been securitized in the secondary market may have a single loan originator but a separate legal holder for each loan. The Bureau understands that a securitization sponsor will typically use the same servicer for multiple securitizations.

[37] Ancillary fees (such as a late payment fee or a disbursement fee) that a servicer may receive in particular circumstances would not constitute a distinct stream of fees for performing student loan servicing.

[38] *See* Title IV Redacted Contract Awards, pp. 12–13, *available at https://www.fbo.gov/spg/ED/FSA/CA/FSA-TitleIV-09/listing.html.* The contract fixes monthly compensation on a per-borrower basis, and the compensation depends on the repayment status of each borrower being serviced. *See also* Student Aid Administration Fiscal Year 2013 Request at p. AA–15, *available at http://www2.ed.gov/about/overview/budget/budget13/justifications/aa-saadmin.pdf.* The Student Aid Administration estimates the average cost per-borrower (which is equivalent to a servicer's per-account compensation for purposes of this Proposed Rule) to be $1.68 per month, based on the contractual prices and the proportion of borrowers with different repayment statuses.

[39] The Bureau recognizes that some covered persons may not receive servicing fees on a per-account or per-month basis. For example, a covered person may perform student loan servicing for loans it originated or holds and may receive no servicing fee or may receive servicing fees on a different basis. For a person that does not receive fees on a per-account basis, each student or prior student would still count as one account under the proposed definition of ''account volume.''

implemented the aggregation called for by 12 U.S.C. 5514(a)(3)(B) by prescribing the addition of all the receipts of a person and its affiliated companies to produce the person's annual receipts. The Bureau proposes to use a similar calculation in the student loan servicing market. The account volume for each nonbank covered person would be the sum of the number of accounts serviced by that nonbank covered person and the number of accounts serviced by all affiliated companies.

The proposed calculation would add together each account on which any affiliated company was providing student loan servicing, even if two affiliated companies were servicing post-secondary education loans with respect to the same student. For example, if two affiliated companies each serviced the loans of the same 10 students, those companies' account volume would nonetheless be 20.[40] The Bureau recognizes that other methods of aggregation may also be appropriate for this market. One alternative would be to add, for a group of affiliated companies, only those accounts that correspond to unique students. Thus, the account volume of the affiliated companies in the example above would be 10, rather than 20. If one of the two affiliated companies also serviced the loans of an eleventh student, with respect to whom the other affiliated company was not servicing any loans, the account volume for the companies would be 11—the 10 common accounts plus the one additional account. The Bureau seeks comments on each of these alternatives as well as other methods of aggregation that might be appropriate for this market.

The proposed definition of number of accounts would establish that each person's number of accounts as of the prior calendar year's December 31 would be aggregated together where two persons become affiliated companies in the middle of a year. The Proposed Rule would also provide that, where two affiliated companies cease to be affiliated companies in the middle of a year, the account volume of each would continue to include the other's number of accounts until the succeeding December 31.

Post-secondary education expenses. Proposed § 1090.106(a) would define ''post-secondary education expenses'' to include any of the expenses that are included as part of the cost of attendance of a student as defined in 20 U.S.C. 1087*ll.*

Post-secondary education loan. Proposed § 1090.106(a) would define the term ''post-secondary education loan'' to mean an extension of credit that is made, insured, or guaranteed under Title IV of the Higher Education Act of 1965 (20 U.S.C. 1070 *et seq.*) or that is extended to a consumer with the expectation that the funds extended will be used in whole or in part to pay post-secondary education expenses. As noted above, a loan may be made to a parent or guardian, or to another consumer, to fund the post-secondary education expenses of a student who is not a borrower of that loan. Such a loan would be within the defined category of post-secondary education loans. Loans for refinancing or consolidating post-secondary education loans would also be considered post-secondary education loans.

The term would exclude any extension of credit under an ''open-end credit'' plan, as defined by the Bureau's Regulation Z, 12 CFR 1026.2(a)(20). The term would also exclude loans secured by real property (such as residential mortgages or reverse mortgages). The Bureau recognizes that students and their families may use credit cards or home equity lines of credit to finance post-secondary education. However, for several reasons, the Bureau believes it may be appropriate to exclude these two categories of credit from the defined category of ''post-secondary education loan.'' First, such loans are typically serviced by entities that focus on servicing credit card accounts or mortgage loans, respectively. Nonbank entities with such a focus ordinarily do not more broadly service loans used for education expenses. Second, pursuant to 12 U.S.C. 5514, the Bureau has supervisory authority, independent of this Proposed Rule, over nonbank covered persons that offer or service loans secured by real estate, including home equity loans or lines of credit. The Bureau also has supervisory authority regarding large portions of the credit card market, through its supervision of very large banks and credit unions and their affiliates pursuant to 12 U.S.C. 5515. Third, post-secondary education loans differ from these other credit products in various ways that may affect the conduct of servicing activities. For example, payments on a post-secondary education loan might not be required until four or more years after a borrower first receives such a loan. In addition, because a post-secondary education loan is not open-end, a servicer is not handling revolving balances. And, unlike a home equity line, a post-secondary education loan is typically not secured.

Student loan servicing. Proposed § 1090.106(a) would define the term ''student loan servicing'' to mean receiving any scheduled periodic payments from a borrower pursuant to the terms of any post-secondary education loan, and making the payments of principal and interest and other amounts with respect to the amounts received from the borrower as may be required pursuant to the terms of the post-secondary education loan or of the contract governing the servicing; or, during a period when payment on a post-secondary education loan is deferred, maintaining account records for the loan and communicating with the borrower regarding the loan, on behalf of the loan's holder. The proposed definition would also make clear that student loan servicing includes interactions with a borrower to facilitate such activities.[41]

Among the interactions that would constitute student loan servicing are activities to help delinquent borrowers avoid or prevent default on obligations arising from post-secondary education loans. For example, a servicer might negotiate a modified payment plan for a borrower who cannot afford the payments scheduled under the original terms of the loan. The Bureau regards default prevention activities as closely connected to the core aspects of student loan servicing—collecting and remitting payments and maintaining account records and communicating with borrowers. The Bureau believes that many student loan servicers perform or subcontract default prevention activities for loans that they are servicing. Significantly, efforts to prevent default on post-secondary education loans can help save borrowers from the serious consequences resulting from default, which can include the accrual of thousands of dollars in penalties and fees. Default on a Federal student loan has an additional deleterious consequence: A loan in default cannot qualify for income-based repayment, an alternative plan under which a low-income borrower may be able to reduce his or her monthly payments. Conducted in accordance with applicable law, default prevention can help protect consumers from certain risks. The Bureau expects to assess those risks in its supervision of larger participants of the student loan servicing market.

[40] This example assumes that each company is receiving only a single stream of fees for each of the 10 students.

[41] Interactions to facilitate the collection of payment from a borrower who has defaulted on a post-secondary education loan would also constitute student loan servicing.

Section 1090.106(b)—Test to Define Larger Participants

Criterion. The Bureau has broad discretion in choosing a criterion for determining whether a nonbank covered person is a larger participant of a market within which the Bureau will conduct supervision. For any specific market, there might be several criteria, used alone or in combination, that could be viewed as reasonable alternatives. For the student loan servicing market, the Bureau is considering a number of criteria, including the total amount of unpaid principal balance on student loans handled by a servicer; the number of student loans serviced; and account volume, which, as discussed in the preceding subsection, refers to the number of accounts on which a person is considered to perform servicing. The Bureau invites comment on all three possible criteria as well as suggestions for other criteria that commenters believe might be superior.

Among these three, the Bureau proposes to use account volume as the criterion that determines which entities are larger participants of the student loan servicing market. A discussion of the definition of ''account volume'' is set forth above. The Bureau expects that account volume will be an appropriate criterion because, among other things, it is a meaningful measure of a student loan servicer's level of participation in the market and of the servicer's impact on consumers. First, the number of accounts on which a person performs servicing reflects the magnitude of the student loan servicer's interactions with consumers.[42] Each account represents a regular series of interactions with at least one consumer. Second, because account volume is defined, in part, in terms of how many streams of fees a servicer receives with respect to a given student, the account volume criterion would correlate to the amount of compensation a person receives for its student loan servicing (and also to receipts and other comparable measures of market participation).

The Bureau anticipates that account volume would be a relatively straightforward quantity for a student loan servicer to calculate, as the occasion to do so arises. Most market participants already assemble data on the number of loans they service and the number of borrowers of those loans. Many student loan servicers are members of the Student Loan Servicing Alliance (SLSA), a trade organization, and report the sizes of their servicing programs to SLSA annually on both those bases.[43] The Bureau's proposed account volume criterion would not necessarily be the same, for any particular servicer, as its number of loans or number of borrowers. But in general, because any student with respect to whom a nonbank covered person is performing student loan servicing corresponds to at least one account, a nonbank covered person's account volume is at least as large as that person's number of borrowers. Thus, any student loan servicer whose number of borrowers is above the threshold can expect that its account volume will also exceed the threshold. As discussed above, the detailed calculation of account volume generally reflects the number of accounts for which the servicer is receiving fees. The Bureau expects that servicers will readily be able to ascertain the latter figure because servicers are presumably invoicing and expecting receipts on that basis.

The Bureau does not have data directly on servicers' account volumes, as defined in this Proposed Rule. However, the Bureau expects that the numbers of borrowers that servicers report to SLSA will be an adequate proxy to enable the Bureau to analyze the market and select a threshold for larger-participant status. The Bureau believes that for most firms the number of accounts may not differ substantially, for purposes of this analysis, from the number of borrowers; and in general the Bureau estimates that a firm's number of accounts is no more than 50 percent greater than the number of borrowers it reports.[44] In addition, the Bureau has no reason to think the relationship between the number of accounts and the reported number of borrowers varies substantially among servicers, particularly among the seven largest market participants.

As additional data for the student loan servicing market become available to the Bureau, the Bureau may consider other criteria and potential revisions to the criterion used in the Proposed Rule.

Threshold. Under the Proposed Rule, a nonbank covered person would be a larger participant of the student loan servicing market if the person's account volume exceeded one million. The Bureau estimates the proposed threshold would bring within the Bureau's supervisory authority about seven student loan servicers. These seven servicers are responsible for between approximately 71 and 94 percent of activity in the nonbank student loan servicing market.[45]

As discussed above, the Bureau does not have precise data on market participants' account volumes calculated in accordance with the proposed definition. However, the number of a servicer's accounts, under the proposed definition of ''account volume,'' cannot be smaller than the number of borrowers whose loans it is servicing. In addition, the Bureau believes that in general the number of accounts should be no greater than the number of loans a servicer reports to SLSA. These two figures therefore provide outer bounds for a given servicer's number of accounts. The Bureau notes that according to the 2012 SLSA volume survey, seven nonbank entities each serviced the loans of more than one million borrowers. Those seven nonbanks would presumably be larger participants under the Proposed

[42] Although student loan servicers may interact with co-signers as well as borrowers, the Bureau believes that the former interactions are less frequent compared to servicers' interactions with borrowers. A servicer typically deals with a co-signer only when the borrower has failed to make payments. The Bureau expects that a servicer's level of interaction with borrowers who are current with their payments is about the same regardless of the balance on a loan or whether the loan is Federal or private. Servicers may have more intensive interactions with borrowers who are in default or near or at risk of default. For such borrowers, the character and quality of servicers' interactions may depend in part on the amount and type of the loans involved. However, the Bureau has no information suggesting that the proportion of loans in default varies substantially among servicers. Account volume should therefore appropriately reflect the comparative amount of consumer impact of various servicers.

[43] *See e.g.,* 2012 SLSA Servicing Volume Survey.

[44] To reach this estimate, the Bureau notes that for Federal loans (which include Federal Direct loans and Federally-owned FFELP loans), each borrower corresponds to exactly one account, because the Department of Education compensates servicers based on their number of unique borrowers, rather than on their number of loans. *See* Title IV Redacted Contract Awards, Attachment A–6—Servicing Pricing Definitions, *available at https://www.fbo.gov/spg/ED/FSA/CA/FSA-TitleIV–09/listing.html.* According to SLSA's data, Federal loans account for 30 million borrowers at the seven largest firms and 31 million borrowers market-wide. The remaining borrowers received private loans (which include non-Federally-owned FFELP loans and any other loan originated privately). The Bureau believes that the number of accounts corresponding to those borrowers is unlikely to exceed the corresponding number of loans reported by the various servicers, because the Bureau is not aware of any servicer receiving a separate fee for a unit smaller than a single loan. (The Bureau recognizes that because SLSA has not established standards, servicers may adopt slightly different methods for counting private loans and their borrowers, but the Bureau does not expect the variations to be substantial.) Thus, the number of accounts at the seven largest market participants is unlikely to exceed 75 million, the sum of 30 million borrowers of Federal loans and 45 million private loans. That figure is roughly 50 percent greater than 49 million, the total number of borrowers reported by the seven largest market participants. Similarly, the number of accounts market-wide is unlikely to exceed 80 million, the sum of 31 million borrowers of Federal loans and 49 million private loans.

[45] 2012 SLSA Servicing Volume Survey, augmented by CFPB estimates.

Rule. The next largest market participants report servicing the loans of approximately 300,000 borrowers each, and are unlikely to reach the one million threshold on the basis of account volume.[46]

The Bureau anticipates that the proposed account-volume threshold of one million would be consistent with the objective of supervising market participants that represent a substantial portion of the student loan servicing market and have a significant impact on consumers. The seven student loan servicers that would likely be larger participants based on the Bureau's proposed threshold collectively service the loans of approximately 49 million borrowers.[47] At the same time, this threshold would likely subject to the Bureau's supervisory authority only entities that can reasonably be considered larger participants of the market.[48]

The Bureau is also considering a lower or higher threshold. For example, an account-volume threshold of 200,000 might allow the Bureau to supervise between 15 and 18 entities, representing between approximately 74 and 99 percent of activity in this market.[49] However, the additional entities that would be included using this lower threshold are only a fraction of the size of the middle tier market participants.[50] In comparison, an account-volume threshold of three million would likely allow the Bureau to supervise only the five very largest participants in the market, representing between approximately 67 and 88 percent of activity in this market based on unpaid principal balance and number of borrowers.[51]

The Bureau seeks comment, including suggestions of alternatives, on the proposed threshold for defining larger participants of the student loan servicing market.

V. Request for Comments

The Bureau invites comment on all aspects of this notice of proposed rulemaking and on the specific issues on which comment is solicited elsewhere herein, including on any appropriate modifications or exceptions to the Proposed Rule.

VI. Section 1022(b)(2)(A) of the Dodd-Frank Act

A. Overview

The Bureau is considering potential benefits, costs, and impacts of the Proposed Rule.[52] The Bureau requests comment on the preliminary analysis presented below as well as submissions of additional data that could inform the Bureau's analysis of the costs, benefits, and impacts of the Proposed Rule. In developing the Proposed Rule, the Bureau has consulted with or offered to consult with the U.S. Department of Education, the Federal Trade Commission, the Board of Governors of the Federal Reserve System, the Federal Deposit Insurance Corporation, the Office of the Comptroller of the Currency, and the National Credit Union Administration, regarding, among other things, consistency with any prudential, market, or systemic objectives administered by such agencies.

The Proposed Rule would define a category of ''larger participant[s] of other markets for other consumer financial products or services'' that would be subject to the Bureau's nonbank supervision program pursuant to 12 U.S.C. 5514(a)(1)(B). The proposed category would include ''larger participants'' of a market for ''student loan servicing'' that the Proposed Rule would describe. Participation in this market would be measured on the basis of account volume. If a nonbank covered person's account volume (measured, per the proposed definition, as of December 31 in the preceding calendar year) exceeded one million, then it would be a larger participant. If a firm was deemed to be a larger participant in a given year, then it would remain a larger participant for at least the subsequent year as well, regardless of its account volume in that year.

B. Potential Benefits and Costs to Consumers and Covered Persons

This analysis considers the benefits, costs, and impacts of the key provisions of the Proposed Rule against a baseline that includes the Bureau's existing rules defining larger participants in certain markets.[53] At present, there is no Federal program for supervision of nonbank student loan servicers of private student loans with respect to Federal consumer financial law. With respect to Federal student loans, there is no Federal program for supervision of nonbank student loan servicers with respect to Federal consumer financial law, but servicing of Federal student loans must be conducted in accordance with the Department of Education's performance standards.[54] With the Proposed Rule in effect, the Bureau would be able to supervise larger participants of the defined student loan servicing market.

The Bureau notes at the outset that limited data are available with which to quantify the potential benefits, costs, and impacts of the Proposed Rule. For example, although the Bureau has general quantitative information, as discussed above, on the number of market participants and their numbers of borrowers and loans and volumes of unpaid principal balances, the Bureau lacks detailed information about their rate of compliance or non-compliance with Federal consumer financial law and about the range of, and costs of, compliance mechanisms used by market participants.

[46] As discussed above, the Bureau expects the number of accounts at a given servicer to be less than 50 percent larger than the number of borrowers. A firm with 300,000 borrowers is therefore unlikely to have more than 450,000 accounts. However, the Bureau's estimates do not take account of any servicers that do not report data to SLSA. These estimates also do not reflect any affiliations that may exist among market participants. If two student loan servicers that appear to be below the threshold given their reports to SLSA are actually affiliated companies, their aggregated account volume might render them both larger participants.

[47] 2012 SLSA Servicing Volume Survey, augmented by CFPB estimates.

[48] The median number of borrowers with loans being serviced by a given entity is approximately 250,000. The median number of loans being serviced is 800,000. The median outstanding principal balance being serviced by a given entity is approximately $3.5 billion. 2012 SLSA Servicing Volume Survey, augmented by CFPB estimates.

[49] 2012 SLSA Servicing Volume Survey, augmented by CFPB estimates. Three entities reported servicing the loans of between 133,000 and 200,000 borrowers. Although these entities would be below a threshold of 200,000 borrowers, they might qualify as larger participants using a threshold of 200,000 accounts. As discussed above, the Bureau expects a firm's number of accounts to be no less than its number of borrowers and no more than 50 percent greater.

[50] 2012 SLSA Servicing Volume Survey, augmented by CFPB estimates.

[51] 2012 SLSA Servicing Volume Survey, augmented by CFPB estimates.

[52] Specifically, 12 U.S.C. 5512(b)(2)(A) calls for the Bureau to consider the potential benefits and costs of a regulation to consumers and covered persons, including the potential reduction of access by consumers to consumer financial products or services, the impact on depository institutions and credit unions with $10 billion or less in total assets as described in 12 U.S.C. 5516, and the impact on consumers in rural areas. In addition, 12 U.S.C. 5512(b)(2)(B) directs the Bureau to consult, before and during the rulemaking, with appropriate prudential regulators or other Federal agencies, regarding consistency with objectives those agencies administer. The manner and extent to which the provisions of 12 U.S.C. 5512(b)(2) apply to a rulemaking of this kind that does not establish standards of conduct is unclear. Nevertheless, to inform this rulemaking more fully, the Bureau performed the analysis and consultations described in those provisions of the Dodd-Frank Act.

[53] The Bureau has discretion in any rulemaking to choose an appropriate scope of analysis with respect to potential benefits and costs and an appropriate baseline. The Bureau, as a matter of discretion, has chosen to describe a broader range of potential effects to more fully inform the rulemaking.

[54] Department of Education, Federal Student Aid Annual Report, p. 2 (2012).

In light of these data limitations, this analysis generally provides a qualitative discussion of the benefits, costs, and impacts of the Proposed Rule. General economic principles, together with the limited data that are available, provide insight into these benefits, costs, and impacts. Where possible, the Bureau has made quantitative estimates based on these principles and data as well as on its experience of undertaking supervision.

The discussion below describes three categories of potential benefits and costs. First, the Proposed Rule, if adopted, would authorize the Bureau's supervision in the student loan servicing market. Larger participants in the market might respond to the possibility of supervision by changing their systems and conduct, and those changes might result in costs, benefits, or other impacts. Second, when the Bureau undertook supervisory activity at specific student loan servicers, those servicers would incur costs from responding to supervisory activity, and the results of these individual supervisory activities might also produce benefits and costs.[55] Third, the Bureau analyzes the costs that might be associated with entities' efforts to assess whether they would qualify as larger participants under the rule.

In considering the costs and benefits of the Proposed Rule, it is important to note that Federal student loans differ from private student loans in various ways, including repayment options, terms and conditions; the treatment of delinquent accounts; and servicing standards, which for Federal loans are imposed by the Department of Education. Federal student loans are also much more prevalent than private student loans: Of the 39 percent of undergraduates who obtained education loans in the 2007–2008 academic year, 90 percent obtained Federal loans and only 39 percent obtained private student loans.[56]

1. Benefits and Costs of Responses to the Possibility of Supervision

The Proposed Rule would subject larger participants of the student loan servicing market to the possibility of Bureau supervision. That the Bureau would be authorized to undertake supervisory activities with respect to a nonbank covered person who qualified as a larger participant would not necessarily mean the Bureau would in fact undertake such activities regarding that covered person in the near future. Rather, supervision of any particular larger participant as a result of this rulemaking would be probabilistic in nature. For example, the Bureau would examine certain larger participants on a periodic or occasional basis. The Bureau's decisions about supervision would be informed, as applicable, by the factors set forth in 12 U.S.C. 5514(b)(2), relating to the size and transaction volume of individual participants, the risks their consumer financial products and services pose to consumers, the extent of State consumer protection oversight, and other factors the Bureau may determine are relevant. Each entity that believed it qualified as a larger participant would know that it might be supervised and might gauge, given its circumstances, the likelihood that the Bureau would initiate an examination or other supervisory activity.

The prospect of potential supervisory activity could create an incentive for larger participants to increase their compliance with Federal consumer financial law. They might anticipate that by doing so (and thereby decreasing risks to consumers), they could decrease the likelihood of their actually being subjected to supervision as the Bureau evaluated the factors outlined above. In addition, an actual examination would likely reveal any past or present noncompliance, which the Bureau could seek to correct through supervisory activity or, in some cases, enforcement actions. Larger participants might therefore judge that the prospect of supervision increased the potential consequences of noncompliance with Federal consumer financial law, and they might seek to decrease that risk by curing or mitigating any noncompliance.

The Bureau believes it is likely that market participants would increase compliance in response to the Bureau's supervisory activities authorized by the Proposed Rule. However, because the Proposed Rule itself would not require any student loan servicer to alter its performance of student loan servicing, any estimate of the amount of increased compliance would be both an estimate of current compliance levels and a prediction of market participants' behavior. The data the Bureau currently has do not support a specific quantitative estimate or prediction. But, to the extent that student loan servicers increased their compliance in response to the Proposed Rule, that response would result in both benefits and costs.[57]

The Bureau notes that the existing levels of compliance with Federal consumer financial law may be different for the servicing of Federal and private student loans. The Department of Education's Office of Federal Student Aid (FSA) sets performance standards and oversees the operations of Federal student loan servicers.[58] FSA standards for systems, controls, and legal compliance may have the collateral consequence that entities comply more faithfully with some aspects of Federal consumer financial law with respect to their servicing of Federal student loans. To that extent, any increase in compliance that resulted from the Proposed Rule might be smaller for Federal than for private student loan servicing. Both the benefits and the costs of increased compliance might thus be smaller for Federal student loan servicing.

a. Benefits From Increased Compliance

Increased compliance would be beneficial to consumers that are affected by student loan servicing. As discussed above, the potential pool of consumers who are directly affected by student loan servicing is broad: In the 2007–2008 academic year, 39 percent of undergraduates and 43 percent of graduate students obtained new student loans.[59] Increasing the rate of compliance with such laws would benefit consumers and the consumer financial market by providing more of the protections mandated by those laws. The roughly seven larger participants of the student loan servicing market that would qualify as larger participants under the proposed threshold currently service the student loans of approximately 49 million borrowers.[60] A number of Federal consumer financial

[55] Pursuant to section 12 U.S.C. 5514(e), the Bureau also has supervisory authority over service providers to nonbank covered persons encompassed by 12 U.S.C. 5514(a)(1), which includes larger participants. The Bureau does not have data on the number or characteristics of service providers to the roughly seven larger participants of the student loan servicing market. The discussion herein of potential costs, benefits, and impacts that might result from the Proposed Rule generally applies to service providers to larger participants.

[56] National Postsecondary Student Aid Study 2008 (hereinafter NPSAS 2008).

[57] Another approach to considering the benefits, costs, and impacts of the Proposed Rule would be to focus almost entirely on the supervision-related costs for larger participants and omit a broader consideration of the benefits and costs of increased compliance. As noted above, the Bureau has, as a matter of discretion, chosen to describe a broader range of potential effects to more fully inform the rulemaking.

[58] Department of Education, Federal Student Aid Annual Report, p. 2 (2012).

[59] NPSAS 2008.

[60] *See* 2012 SLSA Servicing Volume Survey, augmented by CFPB estimates. If a servicer were handling loans to an individual consumer for more than one holder the servicer might count that consumer as more than one borrower. Nonetheless, 49 million borrowers corresponds to a comparably large number of consumers with whom the anticipated larger participants interact.

laws, including the Electronic Fund Transfer Act (EFTA) and its implementing regulation, Regulation E; the Fair Credit Reporting Act (FCRA) and its implementing regulation, Regulation V; the Equal Credit Opportunity Act (ECOA) and its implementing regulation, Regulation B; and Title X of the Dodd-Frank Act offer substantive protections to consumers regarding student loan servicing.[61] Increasing the rate of compliance with such laws would benefit consumers by providing more of the protections mandated by those laws.[62]

For instance, many student loan servicers receive loan payments through preauthorized electronic fund transfers. Among other things, EFTA establishes certain guidelines for ensuring that fund transfers are not sent without consumers' consent.[63] Increased compliance with EFTA might include a higher degree of fidelity to EFTA's consent process and could thereby decrease the risk that borrowers will suffer unauthorized transfers of their funds. Unauthorized transfers could adversely affect consumers by modifying the amount and timing of payments. Even if the amount of payments per period is anticipated, the timing of payments could constrain consumers in the very short run. For example, a consumer might plan to make a student loan payment in one pay period and a car payment in the next pay period, but may have insufficient funds both to make payments in the same pay period and to meet his other financial obligations without incurring additional charges such as overdraft fees. Furthermore, the timing of anticipated payments may affect overall consumption for certain groups of consumers.[64]

As another example, many student loan servicers furnish information to consumer reporting agencies about borrowers' payment histories. Such servicers therefore have certain obligations under FCRA and Regulation V. FCRA prohibits the furnishing of information to a consumer reporting agency that the furnisher knows or has reasonable cause to believe is inaccurate.[65] A servicer that furnishes information to consumer reporting agencies must establish and implement reasonable written policies and procedures regarding the accuracy and integrity of the information furnished, considering applicable Federal guidelines, and must periodically review the policies and procedures and update them as necessary to ensure their continued effectiveness.[66] FCRA also gives consumers the ability to dispute information furnished to consumer reporting agencies by submitting disputes to the consumer reporting agencies or directly to furnishers.[67] A student loan servicer receiving a dispute must conduct a reasonable investigation.[68] Increased compliance with these FCRA requirements would increase the accuracy of information that is furnished to consumer reporting agencies and thus of the information that is included in consumer reports. Given that student debt is a substantial proportion of total consumer debt in the United States, increasing the accuracy of reporting in this segment of the debt market could have a substantial positive effect on consumer report accuracy.[69] Because consumer reports are often critical in decisions regarding consumer financial products and services, more accurate information could lead to better economic decisions that would benefit both markets and consumers.[70]

More broadly, the Bureau will be examining whether larger participants of the student loan servicing market engage in unfair, deceptive, or abusive acts or practices (UDAAPs).[71] Conduct that does not violate an express prohibition of another Federal consumer financial law may nonetheless constitute a UDAAP.[72] Among the areas that the Bureau would examine with, in part, a view to preventing UDAAPs are repayment status processing, loan servicing transfers, general payment processing, application of prepayments and partial payments, and default prevention and avoidance. To the degree that any servicer is currently engaged in any UDAAP in these areas, the cessation of the unlawful act or practice would benefit consumers.[73] All of the previously listed areas could be reviewed during an examination and, therefore, student loan servicers might improve policies and procedures relating to these areas in order to avoid engaging in UDAAPs.

[61] 15 U.S.C. 1693 *et seq.* (EFTA); 12 CFR part 1005 (Regulation E); 15 U.S.C. 1681 *et seq.* (FCRA); 12 CFR part 1022 (Regulation V); 15 U.S.C. 1691 *et seq.* (ECOA); 12 CFR 1002 (Regulation B); 12 U.S.C. 5301 *et seq.* (Dodd-Frank Act).

[62] Among other things, EFTA is intended to establish basic consumer rights with regard to the use of electronic systems to transfer funds. 15 U.S.C. 1693. FCRA was enacted to improve credit report accuracy and protect consumer privacy. *See Safeco Ins. Co. of Am.* v. *Burr,* 551 U.S. 47, 52 (2007) (''Congress enacted the FCRA in 1970 to ensure fair and accurate credit reporting, promote efficiency in the banking system, and protect consumer privacy.''). ECOA makes it unlawful for creditors to discriminate against applicants, with respect to any aspect of a credit transaction, on the basis of race, color, religion, national origin, sex or marital status, or age (provided the applicant has the capacity to contract), the receipt of public assistance income, or the applicants' exercise of certain rights under Federal consumer financial protection laws. 15 U.S.C. 1691(a).

[63] 15 U.S.C. 1693e.

[64] Recent work by Mastrobuoni and Weinberg and by Shapiro and Slemrod demonstrated that the timing of payments to consumers can affect their consumption. Mastrobuoni, Giovanni and Weinberg, Matthew, 2009. ''Heterogeneity in Intra-Monthly Consumption Payments, Self-Control, and Savings at Retirement,'' *American Economic Journal: Economic Policy,* American Economic Association, vol. 1(2), pp. 163–89; Shapiro, Matthew and Slemrod, Joel, 1995. ''Consumer Response to the Timing of Income: Evidence from a Change in Tax Withholding,'' *American Economic Review,* American Economic Association, vol. 85(1), pp. 274–83. Consumers can also be expected to adjust their consumption in response to the timing of anticipated account debits such as automatic-debit student loan payments.

[65] 15 U.S.C. 1681s–2(a)(1)(A).

[66] 12 CFR 1022.42.

[67] 15 U.S.C. 1681i(a)(1), 1681s–2(a)(8); 12 CFR 1022.43.

[68] 15 U.S.C. 1681i (indirect); 12 CFR 1022.43 (direct). In 2011 approximately eight million consumer contacts with the three largest consumer reporting agencies resulted in approximately 32 to 38 million disputed items on consumers' credit files. CFPB, Key Dimensions and Processes in the U.S. Credit Reporting System, p. 4 (2012).

[69] As discussed above, the Bureau estimates that outstanding student loan debt was approximately $1.1 trillion at the end of 2012. This figure represents ten percent of total U.S. consumer debt at the end of the fourth quarter of 2012. *See* Federal Reserve Bank of New York, Quarterly Report on Household Debt and Credit, p. 3 (Feb. 2013), *available at http://www.newyorkfed.org/research/national_economy/householdcredit/DistrictReport_Q42012.pdf* (finding that total U.S. consumer debt was $11.31 trillion at the end of the fourth quarter of 2012).

[70] Inaccurate information, for example, could lead to a consumer's being denied a loan that the consumer could afford to and would be likely to repay. Several studies have identified the problems that inaccurate consumer reporting creates in credit markets. *See e.g.,* Avery, Robert B., et al., *Credit Report Accuracy and Access to Credit,* 2004 Federal Reserve Bulletin 297, pp. 314–15 (estimating fraction of individuals for whom inaccuracies in credit reports might affect credit terms); *see also id.* 301–02 (citing prior research). Inaccurate information could also lead to a consumer's being offered credit at an interest rate higher than would be available if the creditor knew the consumer's true credit history. Conversely, some inaccuracies, by exaggerating some consumers' credit worthiness, may enable such consumers to receive lower interest rates than they otherwise would but understate their risk of default. In all these cases, increasing the accuracy of consumer report information should improve the pricing and allocation of credit.

[71] 12 U.S.C. 5531.

[72] The CFPB Supervision and Examination Manual provides further guidance on how the UDAAP prohibition applies to supervised entities. That examination manual is available at *http://www.consumerfinance.gov/guidance/supervision/manual.*

[73] *See* CFPB Supervision and Examination Manual (October 1, 2012), *available at http://www.consumerfinance.gov/guidance/supervision/manual/* for a more extensive discussion on the areas in which the Bureau intends to examine. Examiners will be reviewing these business lines for UDAAPs and for any other noncompliance with Federal consumer financial law.

b. Costs of Increased Compliance

On the other hand, increasing compliance involves costs. In the first instance, those costs would be paid by the market participants that choose to increase compliance. Student loan servicers might need to hire or train additional personnel to effectuate any changes in their practices that would be necessary to produce the increased compliance. They might need to invest in systems changes to carry out their revised procedures. In addition, student loan servicers might need to develop or enhance compliance management systems, to ensure that they are aware of any gaps in their compliance. Such changes would also require investment and might entail increased operating costs.

An entity that incurred costs in support of increasing compliance might try to recoup those costs by attempting to increase servicing revenues.[74] Whether and to what extent such an increase occurred would depend on competitive conditions in the student loan servicing market. For example, larger participants in the student loan servicing market may be in competition with depository institutions or credit unions (or affiliates thereof) that are already subject to Federal supervision with respect to Federal consumer financial law. Assuming as a baseline Bureau supervision of depository institutions and credit unions with over $10 billion in assets (and their affiliates) and prudential regulator supervision with respect to these areas of other depository institutions and credit unions,[75] to the extent the Proposed Rule resulted in an increase in the costs faced by the roughly seven larger participants, that increase would be a competitive benefit to those other covered persons. And competition from those other covered persons might reduce the ability of the roughly seven larger participants to pass an increase in their costs through as an increase in the price of servicing.

Any increase that did occur could constitute a cost of the rule borne in part by originators and holders of student loans. Originators or holders might respond to such a cost by choosing to bear the higher servicing costs, by exiting the student loan market, or by servicing their portfolios of student loans in-house.

Whether and to what extent such an increase might occur would depend on market conditions. With respect to private student loans, origination and servicing are subject to the negotiation of terms, conditions, and prices; the Bureau lacks detailed information with which to predict what portion of any cost of increased compliance would be borne by loan originators or holders, and what portion would be borne by consumers. For Federally-owned loans, the price of servicing is determined by contracts between servicers and the FSA.[76] Because the FSA, as a dominant purchaser of servicing, has great control over pricing, the Bureau expects that relatively little if any increase in the cost of servicing Federal student loans would be passed through as an increase in the price of servicing. With respect to consumers, Federal student loans ''were authorized as entitlement programs in order to meet student loan demand.'' [77] Eligibility criteria, interest rates, and loan limits for Federal student loans are determined by Federal law, including the periodic reauthorization of the Higher Education Act of 1965.[78] Therefore, while the price of servicing Federal student loans might change, depending on market conditions, the pricing for and access to Federal student loans would likely not change substantially as a consequence of increases in servicers' compliance with Federal consumer financial law.

2. Benefits and Costs of Individual Supervisory Activities

In addition to the responses of market participants anticipating supervision, the possible consequences of the Proposed Rule would include the responses to and effects of individual examinations or other supervisory activity that the Bureau might conduct in the student loan servicing market.

a. Benefits of Supervisory Activities

Supervisory activity could provide several types of benefits. For example, as a result of supervisory activity, the Bureau and the entity might uncover deficiencies in an entity's policies and procedures. The Bureau's examination manual calls for the Bureau generally to prepare a report of each examination, to assess the strength of the entity's compliance mechanisms, and to assess the risks the entity poses to consumers, among other topics. The Bureau would share examination findings with the entity, because one purpose of supervision is to inform the entity of problems detected by examiners. Thus, for example, an examination might find evidence of widespread noncompliance with Federal consumer financial law, or it might identify specific areas where an entity has inadvertently failed to comply. These examples are only illustrative of what kinds of information an examination might uncover.

Detecting and informing entities about such problems should be beneficial to consumers. When the Bureau notifies an entity about risks associated with an aspect of its activities, the entity is expected to adjust its practices to reduce those risks. That response may result in increased compliance with Federal consumer financial law, with benefits like those described above. Or it may avert a violation that would have occurred had Bureau supervision not detected the risk promptly. The Bureau may also inform entities about risks posed to consumers that fall short of violating the law. Action to reduce those risks would also be a benefit to consumers.

Given the obligations student loan servicers have under Federal consumer financial law and the existence of efforts to enforce such law, the results of supervision may also benefit student loan servicers under supervision by detecting compliance problems early. When an entity's level of noncompliance has resulted in litigation or an enforcement action, the entity must face both the costs of defending its actions and the penalties for noncompliance, including potential liability for statutory damages to private plaintiffs. The entity must also adjust its systems to ensure future compliance. Changing practices at this point can be expected to be relatively difficult, because a level of noncompliance that has attracted the attention of enforcement authorities or private plaintiffs is sometimes severe enough to represent a serious failing of an entity's systems. Supervision may detect flaws at a point when correcting them would

[74] The Bureau uses the terms ''revenues'' and ''receipts'' interchangeably in the discussion that follows. The term ''annual receipts,'' however, is used with specific meaning in the context of the Small Business Administration's size standards. How a participant receives its revenue depends on the participant's business model. Compensation for servicing Federal student loans is based on contracts with the Department of Education and assignments are dependent on a Department of Education Performance Score Card. *See* Title IV Redacted Contract Awards, *available at https://www.fbo.gov/spg/ED/FSA/CA/FSA-TitleIV–09/listing.html. See also* 2012 FSA Conference Session 14, Federal Loan Servicer Panel Discussion, p. 11. For private student loans, servicing contracts are negotiated between loan holders or guarantors and master servicers, and between master servicers and subservicers.

[75] *See* 12 U.S.C. 5515; 12 U.S.C. 5516.

[76] *See* Title IV Redacted Contract Awards, *available at https://www.fbo.gov/spg/ED/FSA/CA/FSA-TitleIV–09/listing.html.*

[77] Department of Education Student Loans Overview: Fiscal Year 2013 Budget Request at p. R–28, *available at http://www2.ed.gov/about/overview/budget/budget13/justifications/r-loansoverview.pdf.*

[78] 20 U.S.C. 1070 *et seq.*

be relatively inexpensive. And catching problems before they involve an entity in costly private litigation or administrative enforcement, and potentially the payment of legal penalties or other forms of relief, could save the entity substantial time and money. In short, supervision might benefit student loan servicers under supervision by reducing the need for other more expensive activities, like enforcement and private litigation, to achieve a given compliance rate. Accordingly, a shift of some amount of regulatory oversight from enforcement to supervision would be beneficial to market participants.[79]

b. Costs of Supervisory Activities

The potential costs of actual supervisory activities would arise in two categories. The first would involve the costs to individual student loan servicers of increasing compliance in response to the Bureau's findings during supervisory activity and to supervisory actions. These costs would be similar in nature to the possible compliance costs, described above, that larger participants in general might incur in anticipation of possible supervisory activity. This analysis will not repeat that discussion. The second category would be the cost of supporting supervisory activity.

Supervisory activity may involve requests for information or records, on-site or off-site examinations, or some combination of these activities. For example, in an on-site examination, generally, Bureau examiners would begin by contacting an entity for an initial conference with management. That initial contact is often accompanied by a request for information or records. Based on the discussion with management and an initial review of the information received, examiners would determine the scope of the on-site exam. While on-site, examiners would spend some time in further conversation with management about the entity's policies, processes, and procedures. The examiners would also review documents, records, and accounts to assess the entity's compliance and evaluate the entity's compliance management systems. As with the Bureau's other examinations, examinations of nonbank participants in the student loan servicing market might involve issuing confidential examination reports and compliance ratings. The Bureau's examination manual describes the supervision process and indicates what materials and information an entity can expect examiners to request and review, both before they arrive and during their time on-site.

The primary cost an entity would face in connection with an examination would be the cost of employees' time to collect and provide the necessary information. At this stage in its nonbank supervision program, the Bureau does not have precise estimates of the expected duration and frequency of its examinations and the resources that entities may expend to cooperate with such examinations. The frequency and duration of examinations of any particular entity would depend on a number of factors, including the size of the entity, the compliance or other risks identified, whether the entity has been examined previously, and the demands on the Bureau's supervisory resources imposed by other entities and markets. Nevertheless, some rough estimates may be useful to provide a sense of the magnitude of potential staff costs that entities might incur.

The Bureau has engaged in multiple mortgage servicing exams. Because both mortgage servicing and student loan servicing involve collecting and remitting payments on long-term loans, examinations of mortgage servicers should be a reasonable analogue for the examinations the Bureau would conduct under the Proposed Rule.[80] Therefore, the Bureau intends to estimate duration and labor intensity of examinations using information from mortgage servicing examinations that have already been completed. The average duration of the on-site portion of a Bureau examination of a mortgage servicer is ten weeks.[81] The Bureau estimates the cost of an examination to a student loan servicer by assuming that, similarly, Bureau examiners might review materials and interview employees for ten weeks. An entity might devote the equivalent of one full-time employee during that time and for two weeks beforehand to prepare materials for the examination. The typical cost of an employee involved in responding to supervision can be expected to be roughly $49 per hour.[82] Twelve weeks of such an employee's time would cost approximately $24,000.[83]

By comparison, the Bureau estimates that a student loan servicer with responsibility for one million accounts would receive at least $20.2 million per year in revenue from that activity.[84] Thus, the labor costs associated with an examination, as estimated above, would be no greater than 0.12 percent of the

[79] Further potential benefits to consumers, covered persons, or both might arise from the Bureau's gathering of information during supervisory activities. The goals of supervision include informing the Bureau about activities of market participants and assessing risks to consumers and to markets for consumer financial products and services. The Bureau may use this information to improve regulation of consumer financial products and services and to improve enforcement of Federal consumer financial law, in order to better serve its mission of ensuring consumers' access to fair, transparent, and competitive markets for such products and services. Benefits of this type would depend on what the Bureau learns during supervision and how it uses that knowledge. For example, because the Bureau would examine multiple covered persons in the student loan servicing market, the Bureau would build an understanding of how effective compliance systems and processes function.

[80] Mortgage servicing examinations likely differ in detail from the supervisory activity the Bureau would undertake for student loan servicers. For example, mortgage servicers have certain obligations under the Real Estate Settlement Procedures Act, 12 U.S.C. 2601 *et seq.,* which does not apply to student loan servicing. As another example, mortgages are secured by real estate, and servicing activities may sometimes involve that security interest. The Bureau's examination manuals that relate to mortgage servicing and education lending reflect the differences between these two markets. Nonetheless, for the majority of borrowers, the core activities of the two types of servicers are comparable. The Bureau therefore expects that its experience supervising mortgage servicers can provide a useful guide for estimating the costs of examinations of student loan servicers.

[81] This estimate is based on confidential supervisory Bureau data on the duration of on-site mortgage servicing examinations at both depository institutions and nonbanks. For purposes of this calculation, the Bureau counts its mortgage servicing examinations for which the on-site portion has been completed. Additionally, the Bureau counts only the on-site portion of an examination, which includes time during the on-site period of the examination that examiners spent examining the entity while off-site for holiday or other travel considerations. However, the Bureau does not count time spent scoping an examination before the on-site portion of the examination or summarizing findings or preparing reports of examination afterwards.

[82] Bureau of Labor Statistics, (BLS), Occupational Employment Statistics, *available at ftp://ftp.bls.gov/pub/special.requests/oes/oesm11all.zip.* BLS data for ''activities related to credit information'' (NAICS code 522300) indicate that the mean hourly wage of a compliance officer in that sector is $33.13. BLS data also indicate that salary and wages constitute 67.5 percent of the total cost of compensation. Dividing the hourly wage by 67.5 percent yields a wage (including total costs, such as salary, benefits, and taxes) rounded to the nearest dollar of $49 per hour.

[83] All figures assume 40 hours of work per week.

[84] The Bureau estimates this figure based on the 2013 average unit cost for loan servicing on Federal loans of $1.68 per month per borrower for for-profit servicers of Federal loans, as reported by the Department of Education. *See* Student Aid Administration Fiscal Year 2013 Request at p. AA–15, *available at http://www2.ed.gov/about/overview/budget/budget13/justifications/aa-saadmin.pdf.* The same source reports that not-for-profit servicers' average unit cost is $1.76 per month per borrower. The Bureau assumes, for the estimate, that servicing private student loans generates at least as much revenue per month per borrower as servicing Federal loans, and that a loan is serviced for 12 months per year. Note that since the number of accounts is no less than the number of borrowers, this approach may underestimate revenues.

annual receipts of such a firm.[85] Note that $20.2 million is an estimated lower bound on the annual receipts of a larger participant as defined by the Proposed Rule, and the Bureau anticipates examining most larger participants in the student loan servicing market no more than approximately once every two years. For all these reasons, the costs associated with supervision are therefore likely to be a much smaller percentage of annual receipts for a given larger participant.[86]

However, the Bureau declines to predict, at this point, precisely how many examinations in the student loan servicing market it would undertake in a given year. If the Proposed Rule is adopted, the Bureau will be able to undertake supervisory activity in the identified market; neither the Dodd-Frank Act nor the Proposed Rule specifies a particular level or frequency of examinations. The frequency of examinations would depend on a number of factors, including the Bureau's understanding of the conduct of market participants and the specific risks they pose to consumers; the responses of larger participants to prior examinations; and the demands that other markets make on the Bureau's supervisory resources. These factors can be expected to change over time, and the Bureau's understanding of these factors may change as it gathers more information about the market through its supervision and by other means.

3. Costs of Assessing Larger-Participant Status

Finally, the Bureau acknowledges that in some cases student loan servicers may incur costs in assessing whether they qualify as larger participants and potentially disputing their status. The rule is designed to minimize those costs.

Larger-participant status depends on the number of accounts for which a student loan servicer is performing servicing as of December 31 of the prior calendar year. This number should be readily extractible from administrative records, because account volume is, in general, derived from the compensation a servicer receives. In addition, all but one large nonbank student loan servicer reported to SLSA their number of borrowers and number of loans as of December 31, 2011.[87] These two figures should be lower and upper bounds for a servicer's number of accounts. Student loan servicers that service Federal loans should at a minimum know their Federal loan volumes as of December 31 because the Department of Education keeps up-to-date records of Federal student loan servicers in the National Student Loan Data System (NSLDS).[88]

To the extent that some student loan servicers do not already know their account volumes, such servicers might, in response to the Proposed Rule, develop new systems to count their accounts in accordance with the proposed definition of ''account volume.'' The data the Bureau currently has do not support a detailed estimate of how many student loan servicers would engage in such development or how much they might spend. Regardless, student loan servicers would be unlikely to spend significantly more on specialized systems to count accounts than it would cost them to be supervised by the Bureau as larger participants. It bears emphasizing that even if expenditures on an accounting system successfully proved that a student loan servicer was not a larger participant, it would not necessarily follow that the student loan servicer could not be supervised. The Bureau can supervise a student loan servicer whose conduct the Bureau determines, pursuant to 12 U.S.C. 5514(a)(1)(C), poses risks to consumers. Thus, a student loan servicer choosing to spend significant amounts on an accounting system directed toward the larger-participant test could not be sure it would not be subject to Bureau supervision notwithstanding those expenses. The Bureau therefore believes it is unlikely that any but a very few student loan servicers would undertake such expenditures.

4. Consideration of Alternatives

The Bureau is considering different thresholds for larger-participant status in the student loan servicing market. Figure 1 presents projections of the number of borrowers with loans being serviced by each servicer as of December 31, 2012.[89] Since the Bureau does not have specific data about the number of accounts, as defined in the Proposed Rule, in the discussion that follows the number of borrowers, as reported to SLSA, is treated as a proxy for the number of accounts at a given servicer.[90] These projections may underestimate the actual number of accounts for loans being serviced, because they do not account for the possibility of growth in the servicing of private student loans or the possibility of multiple accounts for a given borrower at a servicer. Note that there is a relatively large decline in number of borrowers between the seventh largest servicer, which services the loans of approximately 1.5 million borrowers, and the next largest servicers, each of which services the loans of approximately 300,000 borrowers. This drop is attributable in part to FSA's mechanism for allocating servicing contracts to the TIVAS and to the not-for-profit servicers (NFPs): Each NFP is limited to servicing at most 100,000 Federal accounts at a time.[91]

One possible alternative the Bureau is considering is a larger threshold, of, for example, three million in account volume. Under such an alternative, the benefits of supervision to both consumers and covered persons would likely be substantially reduced because firms impacting a large number of consumers and/or consumers in important market segments would be omitted. On the other hand, the potential costs to covered persons would of course be reduced if fewer firms were defined as larger participants and thus fewer were subject to the Bureau's supervision authority on that basis.

Figure 1: Estimated Number of Borrowers Serviced by Servicers and Affiliates [92]

[85] An entity may receive revenue from other sources.

[86] Assuming the Bureau examines each of the seven larger participants of the student loan servicing market once every two years, the expected annual labor cost of supervision per larger participant would be approximately $12,000. This would account for at most 0.06 percent of the annual receipts of an entity responsible for one million accounts. To put this in perspective, the Bureau estimates that the seven larger participants handle at least 49 million accounts, resulting in at least $984 million in annual receipts. The expected annual labor cost of supervision, collectively, at these seven larger participants is estimated to be $82,000, which is 0.01 percent of their estimated total annual receipts.

[87] 2012 SLSA Servicing Volume Survey.

[88] Department of Education. 2013, National Student Loan Data System (NSLDS) for Students, *available at https://www.nslds.ed.gov.*

[89] *See* 2012 SLSA Servicing Volume Survey, augmented by CFPB estimates.

[90] For Federal Direct and Federally-owned FFELP loans, the concept of borrower and account are identical.

[91] SAFRA—Not-For-Profit (NFP) Servicer Program documentation, as of Dec. 6, 2012, *available at https://www.fbo.gov/spg/ED/FSA/CA/NFP–RFP–2010/listing.html.*

[92] 2012 SLSA Servicing Volume Survey, augmented by CFPB estimates.

Figure 1: Estimated Number of Borrowers Serviced by Servicers and Affiliates[92]

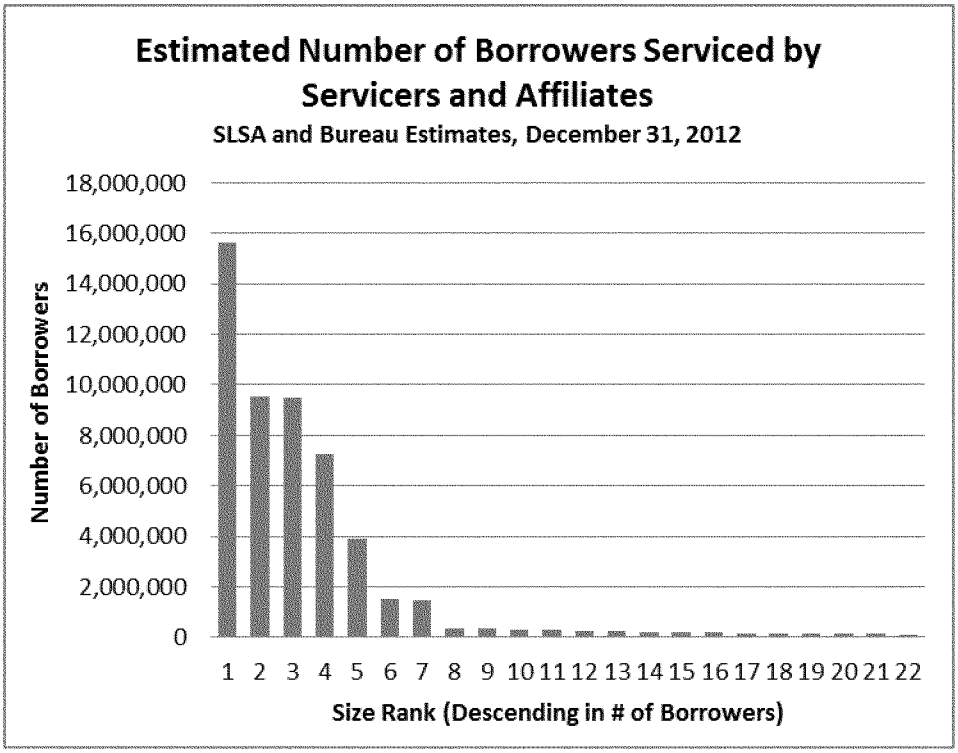

The Bureau is also considering various other criteria for determining larger-participant status, including number of loans and total unpaid principal balances. Calculating either of these metrics might be more involved than calculating total account volume for a given servicer. If so, then a given entity might face greater costs for evaluating or disputing whether it qualified as a larger participant. However, among the participants in the student loan servicing market these metrics correlate strongly with account volume. For each criterion, the Bureau expects that it could choose a suitable threshold for which the set of larger participants, among those entities participating in the market today, would be the same as the seven entities expected to qualify under the Proposed Rule. Consequently, the costs, benefits, and impacts of supervisory activities should not depend on which criterion the Bureau uses.

C. Potential Specific Impacts of the Proposed Rule

1. Depository Institutions and Credit Unions With $10 Billion or Less in Total Assets, As Described in Dodd-Frank Act Section 1026

The Proposed Rule would not apply to depository institutions or credit unions of any size. However, it might, as discussed above, have some impact on depository institutions that hold private student loans or that service private student loans or FFELP loans. The Proposed Rule might therefore alter market dynamics in a market in which some depository institutions and credit unions with less than $10 billion in assets may be active. To the extent such institutions may have less market power than larger institutions, the change in market dynamics could affect them differently. Although this affects all student loan holders that contract for servicing, loan holders that are depository institutions or credit unions with less than $10 billion in assets may have less negotiating power with respect to the price of servicing than larger institutions, so they may face larger price increases. However, the Bureau notes that asset size alone is not necessarily a good predictor of each institution's susceptibility to any changes in the student loan servicing market that might result from the Proposed Rule. An individual institution that focused on educational lending might, on its own or together with its affiliates, play a role in the market for originating student loans or for contracting for servicing that was disproportionate to its assets as a share of the overall banking market. And an individual institution might have contractual or other relationships with particular servicers that could insulate it from some of the potential impacts of the Proposed Rule or could make it especially vulnerable to those impacts.

2. Impact of the Provisions on Consumer Access to Credit and on Consumers in Rural Areas

If the costs of increased compliance increased the price of servicing, creditors might consider that increase in the underwriting and loan pricing process. Private student loan creditors might consider adjusting the terms and conditions of loans to pass some or all of the price increase through to consumers. In addition, creditors might be less willing to extend credit to marginal borrowers. Thus, it is possible that consumers' access to credit might decrease as a result of the Proposed Rule. As noted above, qualifying students are entitled to Federal Direct loans in amounts and on terms specified by statute.[93] An increase in the price of servicing Federal loans is therefore unlikely to reduce consumers' access to such loans.

Since the rule applies uniformly to the loans of a particular type of both rural and non-rural consumers, the rule should not have a unique impact on rural consumers. The Bureau is not aware of any evidence suggesting that rural consumers have been

[93] *See* 20 U.S.C. 1087e.

disproportionately harmed by student loan servicers' failure to comply with Federal consumer financial law. The Bureau would welcome any comments that may provide information related to how student loan servicing affects rural consumers.

VII. Regulatory Flexibility Act

The Regulatory Flexibility Act (RFA), as amended by the Small Business Regulatory Enforcement Fairness Act of 1996, requires each agency to consider the potential impact of its regulations on small entities, including small businesses, small governmental units, and small not-for-profit organizations.[94] The RFA defines a ''small business'' as a business that meets the size standard developed by the Small Business Administration pursuant to the Small Business Act.[95]

The RFA generally requires an agency to conduct an initial regulatory flexibility analysis (IRFA) of any proposed rule subject to notice-and-comment rulemaking requirements, unless the agency certifies that the proposed rule would not have a significant economic impact on a substantial number of small entities. The Bureau also is subject to certain additional procedures under the RFA involving the convening of a panel to consult with small entity representatives prior to proposing a rule for which an IRFA is required.[96]

The undersigned certifies that the Proposed Rule, if adopted, would not have a significant economic impact on a substantial number of small entities and that an initial regulatory flexibility analysis is therefore not required.

The Proposed Rule would define a class of student loan servicers as larger participants of the student loan servicing market and thereby authorize the Bureau to undertake supervisory activities with respect to those servicers. The rule adopts a threshold for larger-participant status of one million in account volume. As estimated above, a student loan servicer with one million accounts receives about $20.2 million in servicing revenue per year. By contrast, under the Small Business Administration's existing criterion, a servicer is a small business only if its annual receipts are below $7 million.[97] Thus, larger participants in the student loan servicing market would generally not be small businesses for purposes of this analysis. Indeed, using the estimate above that a servicer earns $1.68 per month per account, the Bureau believes that none of the larger participants under the Proposed Rule would have annual receipts below $30 million.[98] Moreover, the rule does not itself impose any obligations or standards of conduct on businesses outside the category of larger participants.

For these reasons, the Proposed Rule would not have a significant impact on a substantial number of small entities.[99]

Additionally, and in any event, the Bureau believes that the Proposed Rule would not result in a ''significant impact'' on any small entities that could be affected. As previously noted, when and how often the Bureau would in fact engage in supervisory activity, such as an examination, with respect to a larger participant (and, if so, the frequency and extent of such activity) would depend on a number of considerations, including the Bureau's allocation of resources and the application of the statutory factors set forth in 12 U.S.C. 5514(b)(2). Given the Bureau's finite supervisory resources, and the range of industries over which it has supervisory responsibility for consumer financial protection, when and how often a given student loan servicer would be supervised is uncertain. Moreover, when supervisory activity occurred, the costs that would result from such activity are expected to be minimal in relation to the overall activities of a student loan servicer.[100]

Finally, 12 U.S.C. 5514(e) authorizes the Bureau to supervise service providers to nonbank covered persons encompassed by 12 U.S.C. 5514(a)(1), which includes larger participants. Because the Proposed Rule would not address service providers, effects on service providers need not be discussed for purposes of this RFA analysis. Even were such effects relevant, the Bureau believes that it would be very unlikely that any supervisory activities with respect to the service providers to the approximately seven larger participants in the proposed student loan servicing market would result in a significant economic impact on a substantial number of small entities.[101]

Accordingly, the undersigned certifies that the Proposed Rule would not have a significant economic impact on a substantial number of small entities.

VIII. Paperwork Reduction Act

The Bureau has determined that this Proposed Rule would not impose any new recordkeeping, reporting, or disclosure requirements on covered

[94] 5 U.S.C. 601 *et seq.* The term '''small organization' means any not-for-profit enterprise which is independently owned and operated and is not dominant in its field, unless an agency establishes [an alternative definition after notice and comment].'' *Id.* at 601(4). The term '''small governmental jurisdiction' means governments of cities, counties, towns, townships, villages, school districts, or special districts, with a population of less than fifty thousand, unless an agency establishes [an alternative definition after notice and comment].'' *Id.* at 601(5). The Bureau is not aware of any small governmental units or small not-for-profit organizations to which the Proposed Rule would apply.

[95] 5 U.S.C. 601(3). The Bureau may establish an alternative definition after consultation with the Small Business Administration and an opportunity for public comment.

[96] 5 U.S.C. 609.

[97] 13 CFR 121.201 (NAICS code 522390). For the purposes of this analysis, the Bureau assumes that participants in the student loan servicing market will be classified in NAICS code 522390, ''other activities related to credit intermediation.'' NAICS lists ''loan servicing'' as an index entry corresponding to this code. *See http://www.census.gov/cgi-bin/sssd/naics/naicsrch?code=522390&search=2012 NAICS Search.* The Bureau welcomes comment on whether this or any other NAICS code is most appropriate for this market. The Bureau is aware that a nonbank larger participant of the student loan servicing market could be classified in a NAICS code other than the one that includes loan servicing. For example, some entities may be in NAICS code 522291 for consumer lending, which is the index entry corresponding to student lending. The Small Business Administration's size standard for consumer lending is also $7 million in annual receipts. *See* 13 CFR 121.201 (NAICS code 522291).

[98] If one or more larger participants services loans it holds, such a firm might not receive monthly servicing compensation for such accounts. However, the Bureau is not currently aware of any small businesses that service student loans they originate or hold and that would meet the larger-participant threshold.

[99] A business might, hypothetically, be a larger participant of the student loan servicing market yet be a small business for RFA purposes, if the business lost a significant amount of account volume during the second year after qualifying as a larger participant. The Bureau expects such situations, if any, to be quite rare. In addition, if the Bureau aggregates the activities of affiliated companies in part by adding together numbers of accounts, two companies that are small businesses might, together, have an account volume over one million. The Bureau anticipates no more than a very few such cases, if any, in the student loan servicing market.

[100] As discussed above, the cost of participating in an examination might be roughly 0.12 percent of annual receipts for a firm near the threshold of one million in account volume. The proportion would be larger for a smaller firm, but the impact would still not be substantial.

[101] The Bureau reaches this judgment in light of the number of relevant small firms in the relevant NAICS codes. For example, many of these service providers would be considered to be in the industries with NAICS code 522390, ''Other activities related to credit intermediation.'' According to the 2007 Economics Census, there are more than 5,000 small firms in the industry. The number of firms connected to the roughly seven larger participants of the proposed student loan servicing market is likely to be a fraction of this figure. Moreover, the impact of supervisory activities at such service providers would likely be no more intensive—and probably much less, given the Bureau's exercise of its discretion in supervision—than at the larger participants themselves. As discussed above, supervisory activities at larger participants would not be expected to give rise to a significant economic impact. Finally, because it is very unlikely that the Bureau would supervise many of such entities, a substantial number of entities would not likely be affected.

entities or members of the public that would constitute collections of information requiring approval under the Paperwork Reduction Act, 44 U.S.C. 3501 *et seq.*

List of Subjects in 12 CFR Part 1090

Consumer protection, Credit.

Authority and Issuance

For the reasons set forth in the preamble, the Bureau proposes to amend 12 CFR Part 1090, Subpart B, to read as follows:

PART 1090—DEFINING LARGER PARTICIPANTS OF CERTAIN CONSUMER FINANCIAL PRODUCT AND SERVICE MARKETS

■ 1. The authority citation for part 1090 continues to read as follows:

Authority: 12 U.S.C. 5514(a)(1)(B); 12 U.S.C. 5514(a)(2); 12 U.S.C. 5514(b)(7)(A); and 12 U.S.C. 5512(b)(1).

■ 2. Add a new § 1090.106 to subpart B to read as follows:

§ 1090.106 Student loan servicing market.

(a) *Market-Related definitions.* As used in this subpart:

Account volume means the number of accounts with respect to which a nonbank covered person is considered to perform student loan servicing, calculated as follows:

(i) *Number of accounts.* A nonbank covered person has at least one account for each student or prior student with respect to whom the nonbank covered person performs student loan servicing. If a nonbank covered person is receiving separate fees for performing student loan servicing with respect to a given student or prior student, the nonbank covered person has one account for each stream of fees to which the person is entitled.

(ii) *Time of measurement.* The number of accounts is counted as of December 31 of the prior calendar year.

(iii) *Affiliated companies.*

(A) The account volume of a nonbank covered person is the sum of the number of accounts of that nonbank covered person and of any affiliated companies of that person.

(B) If two persons become affiliated companies, each person's number of accounts as of the prior calendar year's December 31 is included in the total account volume.

(C) If two affiliated companies cease to be affiliated companies, the number of accounts of each continues to be included in the other's account volume until the succeeding December 31.

Post-secondary education expenses means any of the expenses that are included as part of the cost of attendance of a student as defined in 20 U.S.C. 1087*ll.*

Post-secondary education loan means an extension of credit that is made, insured or guaranteed under Title IV of the Higher Education Act of 1965 (20 U.S.C. 1070 *et seq.*) or that is extended to a consumer with the expectation that the funds extended will be used in whole or in part to pay post-secondary education expenses. A loan that is extended in order to refinance or consolidate a consumer's existing post-secondary education loans is also a post-secondary education loan. However, no extension of credit under an open-end credit plan (as defined in Regulation Z, 12 CFR 1026.2(a)(20)) or loan that is secured by real property is a post-secondary education loan, regardless of the purpose for the extension of credit.

Student loan servicing means receiving any scheduled periodic payments from a borrower pursuant to the terms of any post-secondary education loan, and making the payments of principal and interest and other amounts with respect to the amounts received from the borrower as may be required pursuant to the terms of the post-secondary education loan or of the contract governing the servicing; or, during a period when payment on a post-secondary education loan is deferred, maintaining account records for the loan and communicating with the borrower regarding the loan, on behalf of the loan's holder. Student loan servicing also includes interactions with a borrower to facilitate such receiving or making of payments or maintaining of account records and communicating with borrowers. Among the interactions that constitute student loan servicing are activities to help delinquent borrowers avoid or prevent default on obligations arising from post-secondary education loans.

(b) *Test to define larger participants.* A nonbank covered person that offers or provides student loan servicing is a larger participant of the student loan servicing market if the nonbank covered person's account volume exceeds one million.

Dated: March 13, 2013.

Richard Cordray,

Director, Bureau of Consumer Financial Protection.

[FR Doc. 2013–06291 Filed 3–27–13; 8:45 am]

BILLING CODE 4810–AM–P

DEPARTMENT OF TRANSPORTATION

Federal Aviation Administration

14 CFR Part 39

[Docket No. FAA–2013–0211; Directorate Identifier 2012–NM–230–AD]

RIN 2120–AA64

Airworthiness Directives; The Boeing Company Airplanes

AGENCY: Federal Aviation Administration (FAA), DOT.

ACTION: Notice of proposed rulemaking (NPRM).

SUMMARY: We propose to adopt a new airworthiness directive (AD) for certain The Boeing Company Model 747–100, –100B, –100B SUD, –200B, –200C, –200F, –300, –400, –400D, –400F, and 747SR series airplanes. This proposed AD was prompted by reports of cracking at the aft upper corner of the main entry door (MED) 5 cutout. This proposed AD would require inspecting for the presence of repairs and measuring the edge margin at certain fastener locations around the upper aft corner of the door cutout, inspecting for any cracking of the fuselage skin assembly and bear strap in the aft upper corner area of the door cutout, and repairing or modifying the fuselage skin assembly and bear strap if necessary. We are proposing this AD to detect and correct cracking of the skin and bear straps at the aft upper corner of the MED 5 cutout, which could result in in-flight depressurization.

DATES: We must receive comments on this proposed AD by May 13, 2013.

ADDRESSES: You may send comments, using the procedures found in 14 CFR 11.43 and 11.45, by any of the following methods:

- *Federal eRulemaking Portal:* Go to *http://www.regulations.gov*. Follow the instructions for submitting comments.
- Fax: 202–493–2251.
- *Mail:* U.S. Department of Transportation, Docket Operations, M–30, West Building Ground Floor, Room W12–140, 1200 New Jersey Avenue SE., Washington, DC 20590.
- *Hand Delivery:* Deliver to Mail address above between 9 a.m. and 5 p.m., Monday through Friday, except Federal holidays.

For service information identified in this proposed AD, contact Boeing Commercial Airplanes, Attention: Data & Services Management, P.O. Box 3707, MC 2H–65, Seattle, WA 98124–2207; telephone 206–544–5000, extension 1; fax 206–766–5680; Internet *https://www.myboeingfleet.com.* You may

review copies of the referenced service information at the FAA, Transport Airplane Directorate, Transport Airplane Directorate; 1601 Lind Avenue SW., Renton, WA. For information on the availability of this material at the FAA, call 425–227–1221.

Examining the AD Docket

You may examine the AD docket on the Internet at *http://www.regulations.gov;* or in person at the Docket Management Facility between 9 a.m. and 5 p.m., Monday through Friday, except Federal holidays. The AD docket contains this proposed AD, the regulatory evaluation, any comments received, and other information. The street address for the Docket Office (phone: 800–647–5527) is in the **ADDRESSES** section. Comments will be available in the AD docket shortly after receipt.

FOR FURTHER INFORMATION CONTACT: Bill Ashforth, Aerospace Engineer, Airframe Branch, ANM–120S, FAA, Seattle Aircraft Certification Office, 1601 Lind Avenue SW., Renton, WA 98057–3356; phone: (425) 917–6432; fax: (425) 917–6590; email: *bill.ashforth@faa.gov.*

SUPPLEMENTARY INFORMATION:

Comments Invited

We invite you to send any written relevant data, views, or arguments about this proposal. Send your comments to an address listed under the **ADDRESSES** section. Include ''Docket No. FAA–2013–0211; Directorate Identifier 2012–NM–230–AD'' at the beginning of your comments. We specifically invite comments on the overall regulatory, economic, environmental, and energy aspects of this proposed AD. We will consider all comments received by the closing date and may amend this proposed AD because of those comments.

We will post all comments we receive, without change, to *http://www.regulations.gov,* including any personal information you provide. We will also post a report summarizing each substantive verbal contact we receive about this proposed AD.

Discussion

We received a report of a 3.65-inch-long crack that was found at the aft upper corner of the right MED 5 cutout on an airplane with 11,047 total flight cycles. The skin (including the bonded doubler and tripler) and bear strap were found to be cracked. This crack extended up to the door edge frame. That report also stated that cracks that did not extend up to the door edge frame were found on more than 30 airplanes. Those affected airplanes had flown between 10,042 and 31,140 total flight cycles. This condition, if not detected and corrected, could result in in-flight depressurization.

Relevant Service Information

We reviewed Boeing Alert Service Bulletin 747–53A2839, dated November 6, 2012. For information on the procedures and compliance times, see this service information at *http://www.regulations.gov* by searching for Docket No. FAA–2013–0211.

FAA's Determination

We are proposing this AD because we evaluated all the relevant information and determined the unsafe condition described previously is likely to exist or develop in other products of the same type design.

Proposed AD Requirements

This proposed AD would require accomplishing the actions specified in the service information described previously, except as discussed under ''Differences Between the Proposed AD and the Service Information.''

The phrase ''related investigative actions'' might be used in this proposed AD. ''Related investigative actions'' are follow-on actions that: (1) are related to the primary actions, and (2) are actions that further investigate the nature of any condition found. Related investigative actions in an AD could include, for example, inspections.

In addition, the phrase ''corrective actions'' might be used in this proposed AD. ''Corrective actions'' are actions that correct or address any condition found. Corrective actions in an AD could include, for example, repairs.

Differences Between the Proposed AD and the Service Information

Boeing Alert Service Bulletin 747–53A2839, dated November 6, 2012, specifies to contact the manufacturer for disposition of certain repair conditions, but this proposed AD would require repairing those conditions in one of the following ways:

- In accordance with a method that we approve; or
- Using data that meet the certification basis of the airplane, and that have been approved by the Boeing Commercial Airplanes Organization Designation Authorization (ODA) whom we have authorized to make those findings.

Table 3 in paragraph 1.E., ''Compliance,'' of Boeing Alert Service Bulletin 747–53A2839, dated November 6, 2012, specifies post-modification inspections at the aft corner of the MED 5 cutouts, which may be used in support of compliance with section 121.1109(c)(2) or 129.109(b)(2) of the Federal Aviation Regulations (14 CFR 121.1109(c)(2) or 129.109(b)(2)). However, this NPRM does not propose to require those post-modification inspections. This difference has been coordinated with Boeing.

Costs of Compliance

We estimate that this proposed AD affects 246 airplanes of U.S. registry.

We estimate the following costs to comply with this proposed AD:

ESTIMATED COSTS

Action	Labor cost	Parts cost	Cost per product	Cost on U.S. operators
Inspect for repair and measure edge margin.	1 work-hour × $85 per hour = $85 per door (up to 2 doors per airplane).	None	Up to $170	Up to $41,820.

We estimate the following costs to do any necessary repetitive inspections, repairs or modifications that would be required based on the results of the proposed inspection. We have no way of determining the number of aircraft that might need these inspections, repairs or modification:

ON-CONDITION COSTS

Action	Labor cost	Parts cost	Cost per product
Repetitive inspection of un-repaired area	6 work-hours × $85 per hour = $510 per door, per inspection cycle.	None	$510 per door, per inspection cycle.
Repair or modification	10 work-hours × $85 per hour = $850 per door.	Between $7,654 and $17,426 per door.	Between $8,504 and $18,276 per door.

Authority for This Rulemaking

Title 49 of the United States Code specifies the FAA's authority to issue rules on aviation safety. Subtitle I, section 106, describes the authority of the FAA Administrator. Subtitle VII: Aviation Programs, describes in more detail the scope of the Agency's authority.

We are issuing this rulemaking under the authority described in Subtitle VII, Part A, Subpart III, Section 44701: ''General requirements.'' Under that section, Congress charges the FAA with promoting safe flight of civil aircraft in air commerce by prescribing regulations for practices, methods, and procedures the Administrator finds necessary for safety in air commerce. This regulation is within the scope of that authority because it addresses an unsafe condition that is likely to exist or develop on products identified in this rulemaking action.

Regulatory Findings

We determined that this proposed AD would not have federalism implications under Executive Order 13132. This proposed AD would not have a substantial direct effect on the States, on the relationship between the national Government and the States, or on the distribution of power and responsibilities among the various levels of government.

For the reasons discussed above, I certify this proposed regulation:

(1) Is not a ''significant regulatory action'' under Executive Order 12866,

(2) Is not a ''significant rule'' under the DOT Regulatory Policies and Procedures (44 FR 11034, February 26, 1979),

(3) Will not affect intrastate aviation in Alaska, and

(4) Will not have a significant economic impact, positive or negative, on a substantial number of small entities under the criteria of the Regulatory Flexibility Act.

List of Subjects in 14 CFR Part 39

Air transportation, Aircraft, Aviation safety, Incorporation by reference, Safety.

The Proposed Amendment

Accordingly, under the authority delegated to me by the Administrator, the FAA proposes to amend 14 CFR part 39 as follows:

PART 39—AIRWORTHINESS DIRECTIVES

■ 1. The authority citation for part 39 continues to read as follows:

Authority: 49 U.S.C. 106(g), 40113, 44701.

§ 39.13 [Amended]

■ 2. The FAA amends § 39.13 by adding the following new airworthiness directive (AD):

The Boeing Company: Docket No. FAA–2013–0211; Directorate Identifier 2012–NM–230–AD.

(a) Comments Due Date

We must receive comments by May 13, 2013.

(b) Affected ADs

None.

(c) Applicability

This AD applies to The Boeing Company Model 747–100, –100B, –100B SUD, –200B, –200C, –200F, –300, –400, –400D, –400F, and 747SR series airplanes, certificated in any category, as identified in Boeing Alert Service Bulletin 747–53A2839, dated November 6, 2012.

(d) Subject

Joint Aircraft System Component (JASC)/Air Transport Association (ATA) of America Code 53, Fuselage.

(e) Unsafe Condition

This AD was prompted by reports of cracking at the aft upper corner of the main entry door (MED) 5 cutout. We are issuing this AD to detect and correct cracking of the skin and bear straps at the aft upper corner of the MED 5 cutout, which could result in in-flight depressurization.

(f) Compliance

Comply with this AD within the compliance times specified, unless already done.

(g) Inspections and Measurement

Except as specified in paragraph (h)(1) of this AD, at the applicable time specified in paragraph 1.E., ''Compliance,'' of Boeing Alert Service Bulletin 747–53A2839, dated November 6, 2012; Do a detailed inspection for the presence of repairs at the aft upper corner of the MED 5 cutout, and measure the edge margin at certain fastener locations around the corner of the door cutout, in accordance with the Accomplishment Instructions of Boeing Alert Service Bulletin 747–53A2839, dated November 6, 2012.

(1) If a repair is found: Before further flight, inspect or change the repair, using a method approved in accordance with the procedures specified in paragraph (j) of this AD.

(2) If no repair is found, except as specified in paragraph (h)(1) of this AD, at the applicable time specified in paragraph 1.E., ''Compliance,'' of Boeing Alert Service Bulletin 747–53A2839, dated November 6, 2012, do detailed and high frequency eddy current (HFEC) inspections for any cracking of the fuselage skin assembly and bear strap in the aft upper corner area of the door cutout, as applicable, and do all applicable corrective actions, in accordance with the Accomplishment Instructions of Boeing Alert Service Bulletin 747–53A2839, dated November 6, 2012, except as required by paragraph (h)(2) of this AD. Do all applicable corrective actions before further flight. Options provided in Boeing Alert Service Bulletin 747–53A2839, dated November 6, 2012, for accomplishing the corrective action are acceptable for the corresponding requirements of this paragraph, provided that the inspections and preventative modification are done at the applicable times in paragraph 1.E., ''Compliance,'' of Boeing Alert Service Bulletin 747–53A2839, dated November 6, 2012.

(h) Exceptions to the Service Information

(1) Where Boeing Alert Service Bulletin 747–53A2839, dated November 6, 2012, specifies compliance times ''after the original issue date of this service bulletin,'' this AD requires compliance within the specified compliance times ''after the effective date of this AD.''

(2) Where Boeing Alert Service Bulletin 747–53A2839, dated November 6, 2012, specifies to contact Boeing for appropriate action: Before further flight, do the action using a method approved in accordance with the procedures specified in paragraph (j) of this AD.

(i) Post-Repair/Post-Modification Inspections

The post-repair or post-modification inspections specified in Table 3 of paragraph 1.E., ''Compliance,'' of Boeing Alert Service Bulletin 747–53A2839, dated November 6, 2012, are not required by this AD.

Note 1 to paragraph (i) of this AD: The post-repair or post-modification inspection specified in Table 3 of paragraph 1.E., ''Compliance,'' of Boeing Alert Service Bulletin 747–53A2839, dated November 6, 2012, may be used in support of compliance with section 121.1109(c)(2) or 129.109(b)(2)

of the Federal Aviation Regulations (14 CFR 121.1109(c)(2) or 14 CFR 129.109(b)(2)). The corresponding actions specified in the Accomplishment Instructions of Boeing Alert Service Bulletin 747–53A2839, dated November 6, 2012, are not required by this AD.

(j) Alternative Methods of Compliance (AMOCs)

(1) The Manager, Seattle Aircraft Certification Office (ACO), FAA, has the authority to approve AMOCs for this AD, if requested using the procedures found in 14 CFR 39.19. In accordance with 14 CFR 39.19, send your request to your principal inspector or local Flight Standards District Office, as appropriate. If sending information directly to the manager of the ACO, send it to the attention of the person identified in the Related Information section of this AD. Information may be emailed to: *9-ANM-Seattle-ACO-AMOC-Requests@faa.gov.*

(2) Before using any approved AMOC, notify your appropriate principal inspector, or lacking a principal inspector, the manager of the local flight standards district office/certificate holding district office.

(3) An AMOC that provides an acceptable level of safety may be used for any repair required by this AD if it is approved by the Boeing Commercial Airplanes Organization Designation Authorization (ODA) that has been authorized by the Manager, Seattle ACO, to make those findings. For a repair method to be approved, the repair must meet the certification basis of the airplane, and the approval must specifically refer to this AD.

(k) Related Information

(1) For more information about this AD, contact Bill Ashforth, Aerospace Engineer, Airframe Branch, ANM–120S, FAA, Seattle Aircraft Certification Office, 1601 Lind Avenue SW., Renton, WA 98057–3356; phone: (425) 917–6432; fax: (425) 917–6590; email: *bill.ashforth@faa.gov.*

(2) For service information identified in this AD, contact Boeing Commercial Airplanes, Attention: Data & Services Management, P.O. Box 3707, MC 2H–65, Seattle, WA 98124–2207; telephone 206–544–5000, extension 1; fax 206–766–5680; Internet *https://www.myboeingfleet.com.* You may review copies of the referenced service information at the FAA, Transport Airplane Directorate; 1601 Lind Avenue SW., Renton, WA. For information on the availability of this material at the FAA, call 425–227–1221.

Issued in Renton, Washington, on March 20, 2013.

Jeffrey E. Duven,

Acting Manager, Transport Airplane Directorate, Aircraft Certification Service.

[FR Doc. 2013–07205 Filed 3–27–13; 8:45 am]

BILLING CODE 4910–13–P

DEPARTMENT OF TRANSPORTATION

Federal Aviation Administration

14 CFR Part 39

[Docket No. FAA–2013–0164; Directorate Identifier 2013–NE–10–AD]

RIN 2120–AA64

Airworthiness Directives; Austro Engine GmbH Engines

AGENCY: Federal Aviation Administration (FAA), DOT.

ACTION: Notice of proposed rulemaking (NPRM).

SUMMARY: We propose to adopt a new airworthiness directive (AD) for all Austro Engine GmbH model E4 engines. This proposed AD was prompted by reports of several power loss events due to fracture of the waste gate controller lever. This proposed AD would require removing from service certain part number (P/N) waste gate controllers. We are proposing this AD to prevent engine power loss or in-flight shutdown, which could result in loss of control and damage to the airplane.

DATES: We must receive comments on this proposed AD by May 28, 2013.

ADDRESSES: You may send comments by any of the following methods:

- *Federal eRulemaking Portal:* Go to *http://www.regulations.gov* and follow the instructions for sending your comments electronically.
- *Mail:* Docket Management Facility, U.S. Department of Transportation, 1200 New Jersey Avenue SE., West Building Ground Floor, Room W12–140, Washington, DC 20590–0001.
- *Hand Delivery:* Deliver to Mail address above between 9 a.m. and 5 p.m., Monday through Friday, except Federal holidays.
- *Fax:* 202–493–2251.

For service information identified in this proposed AD, contact Austro Engine GmbH, Rudolf-Diesel-Strasse 11, A–2700 Weiner Neustadt, Austria, phone: +43 2622 23000; fax: +43 2622 23000–2711, or go to: *www.austroengine.at.* You may view this service information at the FAA, Engine & Propeller Directorate, 12 New England Executive Park, Burlington, MA. For information on the availability of this material at the FAA, call 781–238–7125.

Examining the AD Docket

You may examine the AD docket on the Internet at *http://www.regulations.gov;* or in person at the Docket Operations office between 9 a.m. and 5 p.m., Monday through Friday, except Federal holidays. The AD docket contains this proposed AD, the regulatory evaluation, any comments received, and other information. The street address for the Docket Operations office (phone: 800–647–5527) is the same as the Mail address provided in the **ADDRESSES** section. Comments will be available in the AD docket shortly after receipt.

FOR FURTHER INFORMATION CONTACT: Frederick Zink, Aerospace Engineer, Engine Certification Office, FAA, Engine & Propeller Directorate, 12 New England Executive Park, Burlington, MA 01803; phone: 781–238–7779; fax: 781–238–7199; email: *frederick.zink@faa.gov.*

SUPPLEMENTARY INFORMATION:

Comments Invited

We invite you to send any written relevant data, views, or arguments about this proposed AD. Send your comments to an address listed under the **ADDRESSES** section. Include ''Docket No. FAA–2013–0164; Directorate Identifier 2013–NE–10–AD'' at the beginning of your comments. We specifically invite comments on the overall regulatory, economic, environmental, and energy aspects of this proposed AD. We will consider all comments received by the closing date and may amend this proposed AD based on those comments.

We will post all comments we receive, without change, to *http://www.regulations.gov,* including any personal information you provide. We will also post a report summarizing each substantive verbal contact with FAA personnel concerning this proposed AD. Using the search function of the Web site, anyone can find and read the comments in any of our dockets, including, if provided, the name of the individual who sent the comment (or signed the comment on behalf of an association, business, labor union, etc.). You may review the DOT's complete Privacy Act Statement in the **Federal Register** published on April 11, 2000 (65 FR 19477–78).

Discussion

The European Aviation Safety Agency (EASA), which is the Technical Agent for the Member States of the European Community, has issued EASA Airworthiness Directive 2013–0025, dated February 6, 2013 (referred to herein after as ''the MCAI''), to correct an unsafe condition for the specified products. The MCAI states:

> Several power loss events have been reported on Austro E4 engines, due to fracture of the waste gate controller lever. This condition, if not corrected, could lead to further cases of power loss events, possibly

resulting in forced landing, damage to the aeroplane and injury to occupants.

We are proposing this AD to prevent engine power loss or in-flight shutdown, which could result in loss of control and damage to the airplane. You may obtain further information by examining the MCAI in the AD docket.

Relevant Service Information

Austro Engine GmbH has issued Mandatory Service Bulletin No. MSB–E4–007/3, Revision 3, dated November 28, 2012. The actions described in this service information are intended to correct the unsafe condition identified in the MCAI.

FAA's Determination and Requirements of This Proposed AD

This product has been approved by the aviation authority of Austria, and is approved for operation in the United States. Pursuant to our bilateral agreement with Austria, EASA has notified us of the unsafe condition described in the MCAI and service information referenced above. We are proposing this AD because we evaluated all information provided by EASA and determined the unsafe condition exists and is likely to exist or develop on other products of the same type design. This proposed AD would require removing from service waste gate controllers, P/N E4A–41–120–000 Rev. 050 or lower, and waste gate controllers, P/N E4B–41–120–000 Rev. 000 during the next engine maintenance, or within 110 flight hours or three months after the effective date of the AD, whichever occurs first.

Costs of Compliance

We estimate that this proposed AD affects 72 engines installed on airplanes of U.S. registry. We also estimate that it would take about one hour per engine to comply with this proposed AD. The average labor rate is $85 per hour. Based on these figures, we estimate the cost of the proposed AD on U.S. operators to be $6,120. Our cost estimate is exclusive of possible warranty coverage.

Authority for This Rulemaking

Title 49 of the United States Code specifies the FAA's authority to issue rules on aviation safety. Subtitle I, section 106, describes the authority of the FAA Administrator. ''Subtitle VII: Aviation Programs,'' describes in more detail the scope of the Agency's authority.

We are issuing this rulemaking under the authority described in ''Subtitle VII, Part A, Subpart III, Section 44701: General requirements.'' Under that section, Congress charges the FAA with promoting safe flight of civil aircraft in air commerce by prescribing regulations for practices, methods, and procedures the Administrator finds necessary for safety in air commerce. This regulation is within the scope of that authority because it addresses an unsafe condition that is likely to exist or develop on products identified in this rulemaking action.

Regulatory Findings

We determined that this proposed AD would not have federalism implications under Executive Order 13132. This proposed AD would not have a substantial direct effect on the States, on the relationship between the national Government and the States, or on the distribution of power and responsibilities among the various levels of government.

For the reasons discussed above, I certify this proposed regulation:

1. Is not a ''significant regulatory action'' under Executive Order 12866;

2. Is not a ''significant rule'' under the DOT Regulatory Policies and Procedures (44 FR 11034, February 26, 1979); and

3. Will not affect intrastate aviation in Alaska to the extent that it justifies making a regulatory distinction, and

4. Will not have a significant economic impact, positive or negative, on a substantial number of small entities under the criteria of the Regulatory Flexibility Act.

We prepared a regulatory evaluation of the estimated costs to comply with this proposed AD and placed it in the AD docket.

List of Subjects in 14 CFR Part 39

Air transportation, Aircraft, Aviation safety, Incorporation by reference, Safety.

The Proposed Amendment

Accordingly, under the authority delegated to me by the Administrator, the FAA proposes to amend 14 CFR part 39 as follows:

PART 39—AIRWORTHINESS DIRECTIVES

■ 1. The authority citation for part 39 continues to read as follows:

Authority: 49 U.S.C. 106(g), 40113, 44701.

§ 39.13 [Amended]

■ 2. The FAA amends § 39.13 by adding the following new airworthiness directive (AD):

Austro Engine GmbH: Docket No. FAA–2013–0164; Directorate Identifier 2013–NE–10–AD.

(a) Comments Due Date

We must receive comments by May 28, 2013.

(b) Affected ADs

None.

(c) Applicability

This AD applies to all Austro Engine GmbH model E4 engines, with a waste gate controller, part number (P/N) E4A–41–120–000 Rev. 050 or lower revision, or a waste gate controller, P/N E4B–41–120–000 Rev. 000, installed.

(d) Reason

This AD was prompted by reports of several power loss events due to fracture of the waste gate controller lever. We are issuing this AD to prevent engine power loss or in-flight shutdown, which could result in loss of control and damage to the airplane.

(e) Actions and Compliance

Unless already done, do the following during the next engine maintenance, or within 110 flight hours or within three months after the effective date of this AD, whichever occurs first.

(f) Remove from service waste gate controllers, P/N E4A–41–120–000 Rev. 050 or lower revision, and waste gate controllers, P/N E4B–41–120–000 Rev. 000.

(g) Installation Prohibition

After the effective date of this AD, do not install any waste gate controller, P/N E4A–41–120–000 Rev. 050 or lower revision, or waste gate controller, P/N E4B–41–120–000 Rev. 000, onto any engine.

(h) Alternative Methods of Compliance (AMOCs)

The Manager, Engine Certification Office, may approve AMOCs for this AD. Use the procedures found in 14 CFR 39.19 to make your request.

(i) Related Information

(1) For more information about this AD, contact Frederick Zink, Aerospace Engineer, Engine Certification Office, FAA, Engine & Propeller Directorate, 12 New England Executive Park, Burlington, MA 01803; phone: 781–238–7779; fax: 781–238–7199; email: *frederick.zink@faa.gov*.

(2) Refer to European Aviation Safety Agency AD 2013–0025, dated February 6, 2013, and Austro Engine GmbH Mandatory Service Bulletin No. MSB–E4–007/3, Revision 3, dated November 28, 2012, for related information.

(3) For service information identified in this AD, contact Austro Engine GmbH, Rudolf-Diesel-Strasse 11, A–2700 Weiner Neustadt, Austria, phone: +43 2622 23000; fax: +43 2622 23000–2711, or go to: *www.austroengine.at*.

(4) You may view the service information at the FAA, Engine & Propeller Directorate, 12 New England Executive Park, Burlington, MA. For information on the availability of this material at the FAA, call 781–238–7125.

Issued in Burlington, Massachusetts, on March 20, 2013.

Robert J. Ganley,

Acting Manager, Engine & Propeller Directorate, Aircraft Certification Service.

[FR Doc. 2013–07210 Filed 3–27–13; 8:45 am]

BILLING CODE 4910–13–P

DEPARTMENT OF TRANSPORTATION

Federal Aviation Administration

14 CFR Part 39

[Docket No. FAA–2013–0215; Directorate Identifier 2012–NM–132–AD]

RIN 2120–AA64

Airworthiness Directives; The Boeing Company Airplanes

AGENCY: Federal Aviation Administration (FAA), DOT.

ACTION: Notice of proposed rulemaking (NPRM).

SUMMARY: We propose to adopt a new airworthiness directive (AD) for certain The Boeing Company Model 707–300, 707–300B, and 707–300C series airplanes; and certain Model 727C, 727–100C, and 727–200F series airplanes. This proposed AD was prompted by a report that a cam latch on the main cargo door (MCD) broke during flight. This proposed AD would require performing repetitive inspections of the MCD cam latches; replacing cam latches, certain bolts, and door hinge fittings; performing related investigative and corrective actions, if necessary; and MCD rigging. We are proposing this AD to detect and correct cracked or damaged cam latches, latch pins, and latch pin cross bolts, which could reduce the structural integrity of the MCD, and result in rapid decompression of the airplane and potential loss of the MCD during flight.

DATES: We must receive comments on this proposed AD by May 13, 2013.

ADDRESSES: You may send comments, using the procedures found in 14 CFR 11.43 and 11.45, by any of the following methods:

- *Federal eRulemaking Portal:* Go to *http://www.regulations.gov.* Follow the instructions for submitting comments.
- *Fax:* 202–493–2251.
- *Mail:* U.S. Department of Transportation, Docket Operations, M–30, West Building Ground Floor, Room W12–140, 1200 New Jersey Avenue SE., Washington, DC 20590.
- *Hand Delivery:* Deliver to Mail address above between 9 a.m. and 5 p.m., Monday through Friday, except Federal holidays.

For service information identified in this proposed AD, contact Boeing Commercial Airplanes, Attention: Data & Services Management, P.O. Box 3707, MC 2H–65, Seattle, WA 98124–2207; telephone 206–544–5000, extension 1; fax 206–766–5680; Internet *https://www.myboeingfleet.com.* You may review copies of the referenced service information at the FAA, Transport Airplane Directorate, 1601 Lind Avenue SW., Renton, WA. For information on the availability of this material at the FAA, call 425–227–1221.

Examining the AD Docket

You may examine the AD docket on the Internet at *http://www.regulations.gov;* or in person at the Docket Management Facility between 9 a.m. and 5 p.m., Monday through Friday, except Federal holidays. The AD docket contains this proposed AD, the regulatory evaluation, any comments received, and other information. The street address for the Docket Office (phone: 800–647–5527) is in the **ADDRESSES** section. Comments will be available in the AD docket shortly after receipt.

FOR FURTHER INFORMATION CONTACT: Kimberly A. DeVoe, Aerospace Engineer, Cabin Safety and Environmental Systems Branch, ANM–150S, FAA, 1601 Lind Avenue SW., Renton, WA 98057–3356; phone: 425–917–6495; fax: 425–917–6590; email: *kimberly.devoe@faa.gov.*

SUPPLEMENTARY INFORMATION:

Comments Invited

We invite you to send any written relevant data, views, or arguments about this proposal. Send your comments to an address listed under the **ADDRESSES** section. Include ''Docket No. FAA–2013–0215; Directorate Identifier 2012–NM–132–AD'' at the beginning of your comments. We specifically invite comments on the overall regulatory, economic, environmental, and energy aspects of this proposed AD. We will consider all comments received by the closing date and may amend this proposed AD because of those comments.

We will post all comments we receive, without change, to *http://www.regulations.gov,* including any personal information you provide. We will also post a report summarizing each substantive verbal contact we receive about this proposed AD.

Discussion

We received a report that the forward-most cam latch on the forward center cam latch pair (cam latch number 3) on the MCD broke during flight on a Model 757 airplane. That airplane had accumulated 20,000 total flight hours and 9,500 total flight cycles when the cam latch broke.

Certain Model 707–300, 707–300B, and 707–300C series airplanes; and certain Model 727C, 727–100C, and 727–200F series airplanes; have an MCD with a similar design to the MCD on the Model 757 airplane. Therefore, those Model 707–300, 707–300B, and 707–300C series airplanes; and Model 727C, 727–100C, and 727–200F series airplanes; might be subject to the unsafe condition revealed on Model 757 airplanes.

The MCD is an outward-hinging door that requires a locking mechanism to keep the door closed. The latch pins in the lower sill of the MCD interlock with the cam latches installed in the bottom of the MCD. When a latch pin interlocks with a cam latch, the cam latch rotates into the closed position and holds the door closed. We are proposing this AD to detect and correct cracked or damaged cam latches, latch pins, and latch pin cross bolts, which could reduce the structural integrity of the MCD, and result in rapid decompression of the airplane and potential loss of the MCD during flight.

Relevant Service Information

We reviewed Boeing 707 Alert Service Bulletin A3536, dated February 6, 2012 (for Model 707–300, 707–300B, and 707–300C series airplanes); and Boeing Alert Service Bulletin 727–52A0150, dated January 30, 2012 (for Model 727C, 727–100C, and 727–200F series airplanes). For information on the procedures and compliance times, see this service information at *http://www.regulations.gov* by searching for Docket No. FAA–2013–0215.

Concurrent Service Information

Boeing 707 Alert Service Bulletin A3536, dated February 6, 2012 (for Model 707–300, 707–300B, and 707–300C series airplanes), specifies concurrent or prior accomplishment of Boeing 707/720 Service Bulletin 3477, Revision 2, dated April 15, 1993 (for Model 707–300, 707–300B, and 707–300C series airplanes). Boeing Alert Service Bulletin 727–52A0150, dated January 30, 2012 (for Model 727C, 727–100C, and 727–200F series airplanes), specifies concurrent or prior accomplishment of Boeing Service Bulletin 727–52–0142, Revision 2, dated April 15, 1993 (for Model 727–100C and 727–200F series airplanes). For information on the procedures, see this service information at *http://*

www.regulations.gov by searching for Docket No. FAA–2013–0215.

Other Relevant Rulemaking

On October 7, 1991, the FAA issued AD 91–22–04, Amendment 39–8064 (56 FR 55223, October 25, 1991), for Model 707/720, 727–100C, and 727–200F series airplanes. That AD requires the use of certain special operating procedures for the MCD, and the inspection, necessary repair, and eventual replacement of MCD cam latches, cam latch bellcranks, and pressure relief door hinge fittings in accordance with the Accomplishment Instructions of Boeing Service Bulletin 3477, dated July 26, 1990 (for Model 707/720 series airplanes); or Boeing Service Bulletin 727–52–0142, dated July 26, 1990 (for Model 727 series airplanes). For this proposed AD, those actions must be accomplished concurrently with the Accomplishment Instructions of Boeing 707/720 Service Bulletin 3477, Revision 2, dated April 15, 1993 (for Model 707–300, 707–300B, and 707–300C series airplanes); or Boeing Service Bulletin 727–52–0142, Revision 2, dated April 15, 1993 (for Model 727–100C and 727–200F series airplanes).

FAA's Determination

We are proposing this AD because we evaluated all the relevant information and determined the unsafe condition described previously is likely to exist or develop in other products of these same type designs.

Proposed AD Requirements

This proposed AD would require accomplishing the actions specified in the service information described previously under ''Relevant Service Information,'' except as discussed under ''Differences Between the Proposed AD and the Service Information.''

The phrase ''related investigative actions'' might be used in this proposed AD. ''Related investigative actions'' are follow-on actions that (1) are related to the primary actions, and (2) are actions that further investigate the nature of any condition found. Related investigative actions in an AD could include, for example, inspections.

In addition, the phrase ''corrective actions'' might be used in this proposed AD. ''Corrective actions'' are actions that correct or address any condition found. Corrective actions in an AD could include, for example, repairs.

Differences Between the Proposed AD and the Service Information

Although Boeing 707 Alert Service Bulletin A3536, dated February 6, 2012 (for Model 707–300, 707–300B, and 707–300C series airplanes); and Boeing Alert Service Bulletin 727–52A0150, dated January 30, 2012 (for Model 727C, 727–100C, and 727–200F series airplanes); specify that operators may contact the manufacturer for disposition of certain repair conditions, this proposed AD would require operators to repair those conditions using a method approved by the FAA.

Costs of Compliance

We estimate that this proposed AD affects 18 airplanes of U.S. registry. We estimate the following costs to comply with this proposed AD:

ESTIMATED COSTS

Action	Labor cost	Parts cost	Cost per product	Cost on U.S. operators
Inspection/Torque/Measurement	3 work-hours × $85 per hour = $255	$0	$255	$4,590.
MCD Modification	48 work-hours × $85 per hour = $4,080.	Up to $8,821 [1]	Up to $12,901	Up to $232,218.

[1] Special tooling is available from the airplane manufacturer; $8,821 is the purchase price and $180 per day is the rental rate.

We estimate the following costs to do any necessary replacements that would be required based on the results of the proposed inspections. We have no way of determining the number of aircraft that might need these replacements:

ON-CONDITION COSTS

Action	Labor cost	Parts cost	Cost per product
Replace Cross Bolts	3 work-hours × $85 per hour = $255	$0	$255.
Replace Cam Latch/Latch Pin	1 work-hour × $85 per hour = $85	0	$85 per latch/pin.
Repetitive Inspections	3 work-hours × $85 = $255 per inspection cycle	0	$255 per inspection cycle.

Authority for This Rulemaking

Title 49 of the United States Code specifies the FAA's authority to issue rules on aviation safety. Subtitle I, section 106, describes the authority of the FAA Administrator. Subtitle VII: Aviation Programs, describes in more detail the scope of the Agency's authority.

We are issuing this rulemaking under the authority described in Subtitle VII, Part A, Subpart III, Section 44701: ''General requirements.'' Under that section, Congress charges the FAA with promoting safe flight of civil aircraft in air commerce by prescribing regulations for practices, methods, and procedures the Administrator finds necessary for safety in air commerce. This regulation is within the scope of that authority because it addresses an unsafe condition that is likely to exist or develop on products identified in this rulemaking action.

Regulatory Findings

We determined that this proposed AD would not have federalism implications under Executive Order 13132. This proposed AD would not have a substantial direct effect on the States, on the relationship between the national Government and the States, or on the distribution of power and responsibilities among the various levels of government.

For the reasons discussed above, I certify this proposed regulation:

(1) Is not a ''significant regulatory action'' under Executive Order 12866,

(2) Is not a ''significant rule'' under the DOT Regulatory Policies and Procedures (44 FR 11034, February 26, 1979),

(3) Will not affect intrastate aviation in Alaska, and

(4) Will not have a significant economic impact, positive or negative, on a substantial number of small entities under the criteria of the Regulatory Flexibility Act.

List of Subjects in 14 CFR Part 39

Air transportation, Aircraft, Aviation safety, Incorporation by reference, Safety.

The Proposed Amendment

Accordingly, under the authority delegated to me by the Administrator, the FAA proposes to amend 14 CFR part 39 as follows:

PART 39—AIRWORTHINESS DIRECTIVES

■ 1. The authority citation for part 39 continues to read as follows:

Authority: 49 U.S.C. 106(g), 40113, 44701.

§ 39.13 [Amended]

■ 2. The FAA amends § 39.13 by adding the following new airworthiness directive (AD):

The Boeing Company: Docket No. FAA–2013–0215; Directorate Identifier 2012–NM–132–AD.

(a) Comments Due Date

We must receive comments by May 13, 2013.

(b) Affected ADs

None.

(c) Applicability

The Boeing Company airplanes, certificated in any category, as identified in paragraphs (c)(1) and (c)(2) of this AD.

(1) Model 707–300, 707–300B, and 707–300C series airplanes, as identified in Boeing 707 Alert Service Bulletin A3536, dated February 6, 2012.

(2) Model 727C, 727–100C, and 727–200F series airplanes, as identified in Boeing Alert Service Bulletin 727–52A0150, dated January 30, 2012.

(d) Subject

Joint Aircraft System Component (JASC)/Air Transport Association (ATA) of America Code 52, Doors.

(e) Unsafe Condition

This AD was prompted by a report that a cam latch on the main cargo door (MCD) broke during flight. We are issuing this AD to detect and correct cracked or damaged cam latches, latch pins, and latch pin cross bolts, which could affect the structural integrity of the MCD, and result in rapid decompression of the airplane and potential loss of the MCD during flight.

(f) Compliance

Comply with this AD within the compliance times specified, unless already done.

(g) MCD Inspections, Bolt Torque, Latch Pin Measurement, Bolt Replacement, and Rigging

At the applicable times specified in table 1 of paragraph 1.E., ''Compliance,'' of Boeing 707 Alert Service Bulletin A3536, dated February 6, 2012 (for Model 707–300, 707–300B, and 707–300C series airplanes); or Boeing Alert Service Bulletin 727–52A0150, dated January 30, 2012 (for Model 727C, 727–100C, and 727–200F series airplanes); except as provided by paragraph (k)(1) of this AD: Do a detailed inspection of the MCD to detect damage, distress, and incorrect rigging; torque the cross bolts; measure the extension of the latch pins; replace all alloy steel bolts used as latch pin cross bolts with corrosion resistant steel bolts; rig the MCD, as applicable; and do all applicable related investigative and corrective actions, except as required by paragraph (k)(2) of this AD; in accordance with the Accomplishment Instructions of Boeing 707 Alert Service Bulletin A3536, dated February 6, 2012 (for Model 707–300, 707–300B, and 707–300C series airplanes); or Boeing Alert Service Bulletin 727–52A0150, dated January 30, 2012 (for Model 727C, 727–100C, and 727–200F series airplanes). Do all applicable related investigative and corrective actions at the applicable time specified in paragraph 1.E., ''Compliance,'' of Boeing 707 Alert Service Bulletin A3536, dated February 6, 2012 (for Model 707–300, 707–300B, and 707–300C series airplanes); or Boeing Alert Service Bulletin 727–52A0150, dated January 30, 2012 (for Model 727C, 727–100C, and 727–200F series airplanes).

(h) Repetitive Inspections

Repeat the applicable inspections specified in paragraph (g) of this AD, as identified in paragraphs (h)(1), (h)(2), and (h)(3) of this AD, at the applicable times specified in table 1 of paragraph 1.E., ''Compliance,'' of Boeing 707 Alert Service Bulletin A3536, dated February 6, 2012 (for Model 707–300, 707–300B, and 707–300C series airplanes); or Boeing Alert Service Bulletin 727–52A0150, dated January 30, 2012 (for Model 727C, 727–100C, and 727–200F series airplanes). The Inspection Conditions are defined in Boeing 707 Alert Service Bulletin A3536, dated February 6, 2012 (for Model 707–300, 707–300B, and 707–300C series airplanes); and Boeing Alert Service Bulletin 727–52A0150, dated January 30, 2012 (for Model 727C, 727–100C, and 727–200F series airplanes).

(1) For airplanes found with Inspection Condition 2 or 4.2: Repeat the detailed inspection of the cam latches and cam pins for damage, distress, and incorrect rigging.

(2) For airplanes found with Inspection Condition 4.1: Repeat the general visual inspection of the cam latch for broken, cracked, missing, or migrated parts.

(3) For airplanes found with Inspection Condition 5: Do the actions specified in paragraphs (h)(3)(i), (h)(3)(ii), and (h)(3)(iii) of this AD.

(i) Repeat the general visual inspection of the cam latch for broken, cracked, missing, or migrated parts.

(ii) Repeat the detailed inspection of the cam latches and cam pins for damage, distress, or incorrect rigging.

(iii) Repeat the high frequency eddy current (HFEC) or magnetic particle inspection of cam latch 1 and cam latch 2 for cracking.

(i) MCD Post-Rigging Initial Inspections and Related Investigative and Corrective Actions

At the applicable times specified in table 2 of paragraph 1.E., ''Compliance,'' of Boeing 707 Alert Service Bulletin A3536, dated February 6, 2012 (for Model 707–300, 707–300B, and 707–300C series airplanes); or Boeing Alert Service Bulletin 727–52A0150, dated January 30, 2012 (for Model 727C, 727–100C, and 727–200F series airplanes); except as provided by paragraph (k)(1) of this AD: Do a general visual inspection of the cam latches and latch pins for discrepancies; a detailed inspection of the cam latches and latch pins for discrepancies; and an HFEC or magnetic particle inspection of cam latch 1 and cam latch 2 for cracking; and do all applicable related investigative and corrective actions, except as required by paragraph (k)(2) of this AD; in accordance with the Accomplishment Instructions of Boeing 707 Alert Service Bulletin A3536, dated February 6, 2012 (for Model 707–300, 707–300B, and 707–300C series airplanes); or Boeing Alert Service Bulletin 727–52A0150, dated January 30, 2012 (for Model 727C, 727–100C, and 727–200F series airplanes). Do all applicable related investigative and corrective actions at the applicable time specified in paragraph 1.E., ''Compliance,'' of Boeing 707 Alert Service Bulletin A3536, dated February 6, 2012 (for Model 707–300, 707–300B, and 707–300C series airplanes); or Boeing Alert Service Bulletin 727–52A0150, dated January 30, 2012 (for Model 727C, 727–100C, and 727–200F series airplanes).

(j) MCD Post-Rigging Repetitive Inspections

Repeat the applicable inspections specified in paragraph (i) of this AD, as identified in paragraph (j)(1) or (j)(2) of this AD, at the applicable times specified in table 2 of paragraph 1.E., ''Compliance,'' of Boeing 707 Alert Service Bulletin A3536, dated February 6, 2012 (for Model 707–300, 707–300B, and 707–300C series airplanes); or Boeing Alert Service Bulletin 727–52A0150, dated January 30, 2012 (for Model 727C, 727–100C, and 727–200F series airplanes). The Inspection Conditions are defined in Boeing 707 Alert Service Bulletin A3536, dated February 6, 2012 (for Model 707–300, 707–300B, and 707–300C series airplanes); and Boeing Alert Service Bulletin 727–52A0150, dated January 30, 2012 (for Model 727C, 727–100C, and 727–200F series airplanes).

(1) For airplanes that have completed the MCD rigging: Do the actions specified in paragraphs (j)(1)(i), (j)(1)(ii), and (j)(1)(iii) of this AD.

(i) Repeat the general visual inspection of the cam latches and latch pins for discrepancies.

(ii) Repeat the detailed inspection of the cam latches and latch pins for discrepancies.

(iii) Repeat the HFEC or magnetic particle inspection of cam latch 1 and cam latch 2 for cracking.

(2) For airplanes found with Inspection Condition 2: Do the actions specified in paragraphs (j)(2)(i) and (j)(2)(ii) of this AD.

(i) Repeat the detailed inspection of the cam latches and latch pins for damage, distress, or incorrect rigging.

(ii) Repeat the HFEC or magnetic particle inspection of cam latch 1 and cam latch 2 for cracking.

(k) Exceptions to Service Bulletin Specifications

The following exceptions apply to this AD.

(1) Where Boeing 707 Alert Service Bulletin A3536, dated February 6, 2012 (for Model 707–300, 707–300B, and 707–300C series airplanes); or Boeing Alert Service Bulletin 727–52A0150, dated January 30, 2012 (for Model 727C, 727–100C, and 727–200F series airplanes); specifies a compliance time relative to the issue date of that service bulletin, this AD requires compliance within the specified compliance time after the effective date of this AD.

(2) Where Boeing 707 Alert Service Bulletin A3536, dated February 6, 2012 (for Model 707–300, 707–300B, and 707–300C series airplanes); or Boeing Alert Service Bulletin 727–52A0150, dated January 30, 2012 (for Model 727C, 727–100C, and 727–200F series airplanes); specifies to contact Boeing for appropriate action: At the applicable time specified in paragraph 1.E., ''Compliance,'' of Boeing 707 Alert Service Bulletin A3536, dated February 6, 2012 (for Model 707–300, 707–300B, and 707–300C series airplanes); or Boeing Alert Service Bulletin 727–52A0150, dated January 30, 2012 (for Model 727C, 727–100C, and 727–200F series airplanes); repair in accordance with a method approved by the Manager, Seattle Aircraft Certification Office (ACO), FAA. For a repair method to be approved, the repair must meet the certification basis of the airplane, and the approval must specifically refer to this AD.

(l) Concurrent Actions

(1) For airplanes identified in Boeing 707 Alert Service Bulletin A3536, dated February 6, 2012: Before or concurrently with accomplishment of the detailed inspection specified in paragraph (g) of this AD, do a general visual inspection of the hinge fittings and the cam latches on the MCD, and perform related investigative and corrective actions as applicable, in accordance with the Accomplishment Instructions of Boeing 707/720 Service Bulletin 3477, Revision 2, dated April 15, 1993.

(2) For airplanes identified in Boeing Alert Service Bulletin 727–52A0150, dated January 30, 2012: Before or concurrently with accomplishment of the detailed inspection specified in paragraph (g) of this AD, do a general visual inspection of the hinge fittings and the cam latches on the MCD, and perform related investigative and corrective actions if applicable, in accordance with the Accomplishment Instructions of Boeing Service Bulletin 727–52–0142, Revision 2, dated April 15, 1993.

(m) Optional Terminating Action

Accomplishment of the latch mechanism adjustment test and the MCD rigging, in accordance with the Accomplishment Instructions of Boeing 707 Alert Service Bulletin A3536, dated February 6, 2012 (for Model 707–300, 707–300B, and 707–300C series airplanes); or Boeing Alert Service Bulletin 727–52A0150, dated January 30, 2012 (for Model 727C, 727–100C, and 727–200F series airplanes); terminates the repetitive inspections specified in paragraph (h) of this AD. Thereafter, do the MCD post-rigging initial inspections and applicable related investigative and corrective actions specified in paragraph (i) of this AD, and the repetitive inspections specified in paragraph (j) of this AD.

(n) Parts Installation Prohibition

As of the effective date of this AD, no person may install an alloy steel bolt as a cross bolt through any latch pin fitting assembly in the lower sill of the MCD on any airplane.

(o) Alternative Methods of Compliance (AMOCs)

(1) The Manager, Seattle ACO, FAA, has the authority to approve AMOCs for this AD, if requested using the procedures found in 14 CFR 39.19. In accordance with 14 CFR 39.19, send your request to your principal inspector or local Flight Standards District Office, as appropriate. If sending information directly to the manager of the ACO, send it to the attention of the person identified in the Related Information section of this AD. Information may be emailed to: *9-ANM-Seattle-ACO-AMOC-Requests@faa.gov*.

(2) Before using any approved AMOC, notify your appropriate principal inspector, or lacking a principal inspector, the manager of the local flight standards district office/certificate holding district office.

(3) An AMOC that provides an acceptable level of safety may be used for any repair required by this AD if it is approved by the Boeing Commercial Airplanes Organization Designation Authorization (ODA) that has been authorized by the Manager, Seattle ACO, to make those findings. For a repair method to be approved, the repair must meet the certification basis of the airplane, and the approval must specifically refer to this AD.

(p) Related Information

(1) For more information about this AD, contact Kimberly A. DeVoe, Aerospace Engineer, Cabin Safety and Environmental Systems Branch, ANM–150S, FAA, 1601 Lind Avenue SW., Renton, WA 98057–3356; phone: 425–917–6495; fax: 425–917–6590; email: *kimberly.devoe@faa.gov*.

(2) For service information identified in this AD, contact Boeing Commercial Airplanes, Attention: Data & Services Management, P.O. Box 3707, MC 2H–65, Seattle, WA 98124–2207; telephone 206–544–5000, extension 1; fax 206–766–5680; Internet *https://www.myboeingfleet.com*. You may review copies of the referenced service information at the FAA, Transport Airplane Directorate, 1601 Lind Avenue SW., Renton, WA. For information on the availability of this material at the FAA, call 425–227–1221.

Issued in Renton, Washington, on March 21, 2013.

Jeffrey E. Duven,

Acting Manager, Transport Airplane Directorate, Aircraft Certification Service.

[FR Doc. 2013–07213 Filed 3–27–13; 8:45 am]

BILLING CODE 4910–13–P

DEPARTMENT OF TRANSPORTATION

Federal Aviation Administration

14 CFR Part 39

[Docket No. FAA–2013–0212; Directorate Identifier 2012–NM–116–AD]

RIN 2120–AA64

Airworthiness Directives; Airbus Airplanes

AGENCY: Federal Aviation Administration (FAA), DOT.

ACTION: Notice of proposed rulemaking (NPRM).

SUMMARY: We propose to adopt a new airworthiness directive (AD) for all Airbus Model A330–223F, –223, –321, –322, and –323 airplanes. This proposed AD was prompted by fatigue load analysis that determined that the inspection interval for certain pylon bolts must be reduced. This proposed AD would require a torque check of forward engine mount bolts, and replacement if necessary. We are proposing this AD to detect and correct loose or broken bolts, which could lead to engine detachment in-flight, and damage to the airplane.

DATES: We must receive comments on this proposed AD by May 13, 2013.

ADDRESSES: You may send comments by any of the following methods:

- *Federal eRulemaking Portal:* Go to *http://www.regulations.gov*. Follow the instructions for submitting comments.
- *Fax:* (202) 493–2251.
- *Mail:* U.S. Department of Transportation, Docket Operations, M–30, West Building Ground Floor, Room W12–140, 1200 New Jersey Avenue SE., Washington, DC 20590.
- *Hand Delivery:* U.S. Department of Transportation, Docket Operations, M–30, West Building Ground Floor, Room W12–140, 1200 New Jersey Avenue SE., Washington, DC, between 9 a.m. and 5 p.m., Monday through Friday, except Federal holidays.

For Airbus service information identified in this proposed AD, contact Airbus SAS—Airworthiness Office—EAL, 1 Rond Point Maurice Bellonte, 31707 Blagnac Cedex, France; telephone +33 5 61 93 36 96; fax +33 5 61 93 45 80; email *airworthiness.A330-A340@airbus.com;* Internet *http://www.airbus.com.* You may review copies of the referenced service information at the FAA, Transport Airplane Directorate, 1601 Lind Avenue SW., Renton, WA. For information on the availability of this material at the FAA, call 425–227–1221.

Examining the AD Docket

You may examine the AD docket on the Internet at *http://www.regulations.gov;* or in person at the Docket Operations office between 9 a.m. and 5 p.m., Monday through Friday, except Federal holidays. The AD docket contains this proposed AD, the regulatory evaluation, any comments received, and other information. The street address for the Docket Operations office (telephone (800) 647–5527) is in the **ADDRESSES** section. Comments will be available in the AD docket shortly after receipt.

FOR FURTHER INFORMATION CONTACT:

Vladimir Ulyanov, Aerospace Engineer, International Branch, ANM–116, Transport Airplane Directorate, FAA 1601 Lind Avenue SW., Renton, WA 98057–3356; telephone (425) 227–1138; fax (425) 227–1149.

SUPPLEMENTARY INFORMATION:

Comments Invited

We invite you to send any written relevant data, views, or arguments about this proposed AD. Send your comments to an address listed under the **ADDRESSES** section. Include ''Docket No. FAA–2013–0212; Directorate Identifier 2012–NM–116–AD'' at the beginning of your comments. We specifically invite comments on the overall regulatory, economic, environmental, and energy aspects of this proposed AD. We will consider all comments received by the closing date and may amend this proposed AD based on those comments.

We will post all comments we receive, without change, to *http://www.regulations.gov,* including any personal information you provide. We will also post a report summarizing each substantive verbal contact we receive about this proposed AD.

Discussion

The European Aviation Safety Agency (EASA), which is the Technical Agent for the Member States of the European Community, has issued EASA Airworthiness Directive 2012–0094, dated May 31, 2012 (referred to after this as ''the MCAI''), to correct an unsafe condition for the specified products. The MCAI states:

> The forward mount engine pylon bolts, Part Number (P/N) 51U615, fitted on Airbus A330 aeroplanes with Pratt & Whitney (PW) PW4000 engines, are made from MP159 material.
>
> The U.S. Federal Aviation Administration (FAA), as Engine Certification Authority, issued AD 2006–16–05 [Amendment 39–14705 (71 FR 44185, August 4, 2006)] to require (paragraph (g) of that AD) repetitive torque checks of MP159 material forward mount pylon bolts fitted on certain PW4000 series engines.
>
> However, the engine mount system is considered to be part of aeroplane certification rather than the engine certification. Following further fatigue load analysis by Airbus of the A330 engine mount system, completed in February 2011 for both the freighter and passenger models of A330 aeroplanes, it was determined that MP159 material forward mount pylon bolts inspection interval must be reduced.
>
> This condition, if not detected and corrected, could ultimately lead to engine detachment from the aeroplane, possibly resulting in damage to the aeroplane and/or injury to person on the ground.
>
> For the reasons described above, this [EASA] AD requires accomplishment of repetitive torque checks of the forward mount pylon bolts installed on A330 aeroplanes powered by PW4000 engines and, depending on findings, the replacement of all four bolts and associated nuts.

Findings (discrepancies) include loose or broken bolts. You may obtain further information by examining the MCAI in the AD docket.

Relevant Service Information

Airbus has issued Mandatory Service Bulletin A330–71–3028, Revision 01, dated February 20, 2012. The actions described in this service information are intended to correct the unsafe condition identified in the MCAI.

Compliance With AD 2006–16–05, Amendment 39–14705 (71 FR 44185, August 4, 2006)

Doing the actions required by paragraph (g) of this AD constitutes compliance with the requirements specified in paragraph (g) of AD 2006–16–05, Amendment 39–14705 (71 FR 44185, August 4, 2006).

FAA's Determination and Requirements of This Proposed AD

This product has been approved by the aviation authority of another country, and is approved for operation in the United States. Pursuant to our bilateral agreement with the State of Design Authority, we have been notified of the unsafe condition described in the MCAI and service information referenced above. We are proposing this AD because we evaluated all pertinent information and determined an unsafe condition exists and is likely to exist or develop on other products of the same type design.

Costs of Compliance

Based on the service information, we estimate that this proposed AD would affect about 41 products of U.S. registry. We also estimate that it would take about 2 work-hours per product to comply with the basic requirements of this proposed AD. The average labor rate is $85 per work-hour. Based on these figures, we estimate the cost of the proposed AD on U.S. operators to be $6,970, or $170 per product.

In addition, we estimate that any necessary follow-on actions would take about 1 work-hour and require parts costing $6,747, for a cost of $6,832 per product. We have no way of determining the number of products that may need these actions.

Authority for This Rulemaking

Title 49 of the United States Code specifies the FAA's authority to issue rules on aviation safety. Subtitle I, section 106, describes the authority of the FAA Administrator. ''Subtitle VII: Aviation Programs,'' describes in more detail the scope of the Agency's authority.

We are issuing this rulemaking under the authority described in ''Subtitle VII, Part A, Subpart III, Section 44701: General requirements.'' Under that section, Congress charges the FAA with promoting safe flight of civil aircraft in air commerce by prescribing regulations for practices, methods, and procedures the Administrator finds necessary for safety in air commerce. This regulation is within the scope of that authority because it addresses an unsafe condition that is likely to exist or develop on products identified in this rulemaking action.

Regulatory Findings

We determined that this proposed AD would not have federalism implications under Executive Order 13132. This proposed AD would not have a substantial direct effect on the States, on the relationship between the national Government and the States, or on the distribution of power and responsibilities among the various levels of government.

For the reasons discussed above, I certify this proposed regulation:

1. Is not a ''significant regulatory action'' under Executive Order 12866;

2. Is not a ''significant rule'' under the DOT Regulatory Policies and Procedures (44 FR 11034, February 26, 1979);

3. Will not affect intrastate aviation in Alaska; and

4. Will not have a significant economic impact, positive or negative, on a substantial number of small entities under the criteria of the Regulatory Flexibility Act.

We prepared a regulatory evaluation of the estimated costs to comply with this proposed AD and placed it in the AD docket.

List of Subjects in 14 CFR Part 39

Air transportation, Aircraft, Aviation safety, Incorporation by reference, Safety.

The Proposed Amendment

Accordingly, under the authority delegated to me by the Administrator, the FAA proposes to amend 14 CFR part 39 as follows:

PART 39—AIRWORTHINESS DIRECTIVES

■ 1. The authority citation for part 39 continues to read as follows:

Authority: 49 U.S.C. 106(g), 40113, 44701.

§ 39.13 [Amended]

■ 2. The FAA amends § 39.13 by adding the following new AD:

Airbus: Docket No. FAA–2013–0212; Directorate Identifier 2012–NM–116–AD.

(a) Comments Due Date

We must receive comments by May 13, 2013.

(b) Affected ADs

This AD affects AD 2006–16–05, Amendment 39–14705 (71 FR 44185, August 4, 2006).

(c) Applicability

This AD applies to Airbus Model A330–223F, –223, –321, –322, and –323 airplanes, certificated in any category, all manufacturer serial numbers.

(d) Subject

Air Transport Association (ATA) of America Code 71, Powerplant.

(e) Reason

This AD was prompted by fatigue load analysis that determined that certain pylon bolts inspection interval must be reduced. We are issuing this AD to detect and correct loose or broken bolts, which could lead to engine detachment in-flight, and damage to the airplane.

(f) Compliance

You are responsible for having the actions required by this AD performed within the compliance times specified, unless the actions have already been done.

(g) Torque Check and Replacement

(1) Within the compliance times specified in table 1, table 2, or table 3 to paragraph (g) of this AD, as applicable to airplane model and utilization, do a torque check to determine if there are any loose or broken forward engine mount bolts (4 positions/engine) on both engines, and repeat that torque check at intervals not to exceed the values defined in table 1, table 2, or table 3 to paragraph (g) of this AD, in accordance with the Accomplishment Instructions of Airbus Mandatory Service Bulletin A330–71–3028, Revision 01, dated February 20, 2012. For the purposes of table 1 and table 2 to paragraph (g) of this AD, the average flight time (AFT) is defined as a computation of the number of flight hours divided by the number of flight cycles accumulated since last torque check or since the airplane's first flight, as applicable.

TABLE 1 TO PARAGRAPH (g) OF THIS AD: FOR MODEL A330–223, –321, –322 AND –323 AIRPLANES WITH AFT MORE THAN 132 MINUTES

Flight cycles accumulated on the effective date of this AD since last torque check performed as specified in Pratt & Whitney Alert Service Bulletin PW4G–100–A71–32; or since airplane first flight, as applicable	Compliance time	Torque check interval (not to exceed)
0–1,850	Within 2,350 flight cycles since the last torque check as specified in Pratt & Whitney Alert Service Bulletin PW4G–100–A71–32, or since airplane first flight, as applicable.	2,350 flight cycles or 24,320 flight hours, whichever occurs first.
1,851–2,700	Within 500 flight cycles after the effective date of this AD without exceeding 2,700 flight cycles since last torque check as specified in Pratt & Whitney Alert Service Bulletin PW4G–100–A71–32, or since airplane first flight, as applicable; or within 3 months after the effective date of this AD; whichever occurs later.	2,350 flight cycles or 24,320 flight hours, whichever occurs first.

TABLE 2 TO PARAGRAPH (g) OF THIS AD: FOR MODEL A330–321, –322, AND –323 AIRPLANES WITH AFT EQUAL OR LESS THAN 132 MINUTES; AND FOR MODEL A330–321, –322, AND –323 AIRPLANES ON WHICH THE AFT IS NOT CALCULATED ON A REGULAR BASIS

Flight cycles accumulated on the effective date of this AD since last torque check as performed as specified in Pratt & Whitney Alert Service Bulletin PW4G–100–A71–32; or since airplane first flight, as applicable	Compliance time	Torque check interval (not to exceed)
0–1,450	Within 1,950 flight cycles since the last torque check performed as specified in Pratt & Whitney Alert Service Bulletin PW4G–100–A71–32, or since airplane first flight, as applicable.	1,950 flight cycles or 20,210 flight hours, whichever occurs first.
1,451–2,700	Within 500 flight cycles after the effective date of this AD without exceeding 2,700 flight cycles since last torque check performed as specified in Pratt & Whitney Alert Service Bulletin PW4G–100–A71–32, or since airplane first flight, as applicable; or within 3 months after the effective date of this AD; whichever occurs later.	1,950 flight cycles or 20,210 flight hours, whichever occurs first.

TABLE 3 TO PARAGRAPH (g) OF THIS AD: FOR MODEL A330–223F AIRPLANES

Compliance time	Torque check interval (not to exceed)
Within 2,140 flight cycles or 6,600 flight hours, whichever occurs first since the last torque check performed as specified in Pratt & Whitney Alert Service Bulletin PW4G–100–A71–32, or since airplane first flight, as applicable.	2,140 flight cycles or 6,600 flight hours, whichever occurs first.

(2) If any loose or broken bolt is detected during the check required by paragraph (g)(1) of this AD, before further flight, replace all four forward engine mount bolts and associated nuts, on the engine where the loose or broken bolt was detected, with new bolts and nuts, in accordance with the Accomplishment Instructions of Airbus Mandatory Service Bulletin A330–71–3028, Revision 01, dated February 20, 2012.

(3) Replacement of bolts and nuts as required by paragraph (g)(2) of this AD is not terminating action for the repetitive torque checks required by paragraph (g)(1) of this AD.

(h) Compliance with AD 2006–16–05, Amendment 39–14705 (71 FR 44185, August 4, 2006)

Doing the actions required by paragraph (g) of this AD constitutes compliance with the requirements specified in paragraph (g) of AD 2006–16–05, Amendment 39–14705 (71 FR 44185, August 4, 2006).

(i) Parts Installation Prohibition

As of the effective date of this AD, no person may install any INCO718 material, forward mount pylon bolt having Pratt & Whitney P/N 54T670 on any airplane.

(j) Credit for Previous Actions

This paragraph provides credit for the actions required by paragraphs (g)(1) and (g)(2) of this AD, if those actions were performed before the effective date of this AD using Airbus Mandatory Service Bulletin A330–71–3028, dated December 16, 2011, which is not incorporated by reference in this AD.

(k) Other FAA AD Provisions

The following provisions also apply to this AD:

(1) *Alternative Methods of Compliance (AMOCs):* The Manager, International Branch, ANM–116, Transport Airplane Directorate, FAA, has the authority to approve AMOCs for this AD, if requested using the procedures found in 14 CFR 39.19. In accordance with 14 CFR 39.19, send your request to your principal inspector or local Flight Standards District Office, as appropriate. If sending information directly to the International Branch, send it to ATTN: Vladimir Ulyanov, Aerospace Engineer, International Branch, ANM–116, Transport Airplane Directorate, FAA 1601 Lind Avenue SW., Renton, WA 98057–3356; telephone (425) 227–1138; fax (425) 227–1149. Information may be emailed to: *9-ANM-116-AMOC-REQUESTS@faa.gov.* Before using any approved AMOC, notify your appropriate principal inspector, or lacking a principal inspector, the manager of the local flight standards district office/certificate holding district office. The AMOC approval letter must specifically reference this AD.

(2) *Airworthy Product:* For any requirement in this AD to obtain corrective actions from a manufacturer or other source, use these actions if they are FAA-approved. Corrective actions are considered FAA-approved if they are approved by the State of Design Authority (or their delegated agent). You are required to assure the product is airworthy before it is returned to service.

(l) Related Information

(1) Refer to MCAI European Aviation Safety Agency Airworthiness Directive 2012–0094, dated May 31, 2012; and Airbus Mandatory Service Bulletin A330–71–3028, Revision 01, dated February 20, 2012.

(2) For Airbus service information identified in this AD, contact Airbus SAS—Airworthiness Office—EAL, 1 Rond Point Maurice Bellonte, 31707 Blagnac Cedex, France; telephone +33 5 61 93 36 96; fax +33 5 61 93 45 80; email *airworthiness.A330-A340@airbus.com;* Internet *http://www.airbus.com.* You may review copies of the referenced service information at the FAA, Transport Airplane Directorate, 1601 Lind Avenue SW., Renton, WA. For information on the availability of this material at the FAA, call 425–227–1221.

Issued in Renton, Washington, on March 20, 2013.

Jeffrey E. Duven,

Acting Manager, Transport Airplane Directorate, Aircraft Certification Service.

[FR Doc. 2013–07203 Filed 3–27–13; 8:45 am]

BILLING CODE 4910–13–P

DEPARTMENT OF TRANSPORTATION

Federal Aviation Administration

14 CFR Part 71

[Docket No. FAA–2013–0158; Airspace Docket No. 13–ASO–5]

Proposed Amendment of Class E Airspace; Tuskegee, AL

AGENCY: Federal Aviation Administration (FAA), DOT.

ACTION: Notice of proposed rulemaking (NPRM).

SUMMARY: This action proposes to amend Class E Airspace at Tuskegee, AL, as the Tuskegee VOR/DME has been decommissioned and airspace reconfiguration is necessary for the safety and airspace management of Instrument Flight Rules (IFR) operations at Moten Field Municipal Airport. This action also would amend the airport's name.

DATES: Comments must be received on or before May 13, 2013.

ADDRESSES: Send comments on this rule to: U.S. Department of Transportation, Docket Operations, West Building Ground Floor, Room W12–140, 1200 New Jersey SE., Washington, DC 20590–0001; Telephone: 1–800–647–5527; Fax: 202–493–2251. You must identify the Docket Number FAA–2013–0158; Airspace Docket No. 13–ASO–5, at the beginning of your comments. You may also submit and review received comments through the Internet at *http://www.regulations.gov.*

FOR FURTHER INFORMATION CONTACT: John Fornito, Operations Support Group, Eastern Service Center, Federal Aviation Administration, P.O. Box 20636, Atlanta, Georgia 30320; telephone (404) 305–6364.

SUPPLEMENTARY INFORMATION:

Comments Invited

Interested persons are invited to comment on this rule by submitting such written data, views, or arguments, as they may desire. Comments that provide the factual basis supporting the views and suggestions presented are particularly helpful in developing reasoned regulatory decisions on the proposal. Comments are specifically invited on the overall regulatory, aeronautical, economic, environmental, and energy-related aspects of the proposal.

Communications should identify both docket numbers (FAA Docket No. FAA–2013–0158; Airspace Docket No. 13–ASO–5) and be submitted in triplicate to the Docket Management System (see ''**ADDRESSES**'' section for address and phone number). You may also submit comments through the Internet at *http://www.regulations.gov.*

Persons wishing the FAA to acknowledge receipt of their comments on this action must submit with those comments a self-addressed stamped postcard on which the following statement is made: ''Comments to Docket No. FAA–2013–0158; Airspace Docket No. 13–ASO–5.'' The postcard

will be date/time stamped and returned to the commenter.

All communications received before the specified closing date for comments will be considered before taking action on the proposed rule. The proposal contained in this notice may be changed in light of the comments received. A report summarizing each substantive public contact with FAA personnel concerned with this rulemaking will be filed in the docket.

Availability of NPRMs

An electronic copy of this document may be downloaded from and comments submitted through *http://www.regulations.gov*. Recently published rulemaking documents can also be accessed through the FAA's Web page at *http://www.faa.gov/airports_airtraffic/air_traffic/publications/airspace_amendments/*.

You may review the public docket containing the proposal, any comments received, and any final disposition in person in the Dockets Office (see the **ADDRESSES** section for address and phone number) between 9:00 a.m. and 5:00 p.m., Monday through Friday, except Federal holidays. An informal docket may also be examined during normal business hours at the office of the Eastern Service Center, Federal Aviation Administration, room 350, 1701 Columbia Avenue, College Park, Georgia 30337.

Persons interested in being placed on a mailing list for future NPRM's should contact the FAA's Office of Rulemaking, (202) 267–9677, to request a copy of Advisory circular No. 11–2A, Notice of Proposed Rulemaking distribution System, which describes the application procedure.

The Proposal

The FAA is considering an amendment to Title 14, Code of Federal Regulations (14 CFR) part 71 by modifying Class E airspace extending upward from 700 feet above the surface to within a 6.7-mile radius of Moten Field Municipal Airport, Tuskegee, AL, formerly called Tuskegee Municipal Airport. Airspace reconfiguration is necessary due to the decommissioning of the Tuskegee VOR/DME and cancellation of the VOR approach, and for continued safety and management of IFR operations at the airport. Accordingly, the extension of Class E airspace to the northeast of the airport would be eliminated.

Class E airspace designations are published in Paragraph 6005 of FAA Order 7400.9W, dated August 8, 2012, and effective September 15, 2012, which is incorporated by reference in 14 CFR 71.1. The Class E airspace designation listed in this document will be published subsequently in the Order.

The FAA has determined that this proposed regulation only involves an established body of technical regulations for which frequent and routine amendments are necessary to keep them operationally current. It, therefore, (1) Is not a ''significant regulatory action'' under Executive Order 12866; (2) is not a ''significant rule'' under DOT Regulatory Policies and Procedures (44 FR 11034; February 26, 1979); and (3) does not warrant preparation of a Regulatory Evaluation as the anticipated impact is so minimal. Since this is a routine matter that will only affect air traffic procedures and air navigation, it is certified that this proposed rule, when promulgated, would not have a significant economic impact on a substantial number of small entities under the criteria of the Regulatory Flexibility Act.

The FAA's authority to issue rules regarding aviation safety is found in Title 49 of the United States Code. Subtitle I, Section 106 describes the authority of the FAA Administrator. Subtitle VII, Aviation Programs, describes in more detail the scope of the agency's authority. This proposed rulemaking is promulgated under the authority described in Subtitle VII, Part, A, Subpart I, Section 40103. Under that section, the FAA is charged with prescribing regulations to assign the use of airspace necessary to ensure the safety of aircraft and the efficient use of airspace. This proposed regulation is within the scope of that authority as it would amend Class E airspace at Moten Field Municipal Airport, Tuskegee, AL.

This proposal would be subject to an environmental analysis in accordance with FAA Order 1050.1E, ''Environmental Impacts: Policies and Procedures'' prior to any FAA final regulatory action.

Lists of Subjects in 14 CFR Part 71

Airspace, Incorporation by reference, Navigation (air).

The Proposed Amendment

In consideration of the foregoing, the Federal Aviation Administration proposes to amend 14 CFR part 71 as follows:

PART 71—DESIGNATION OF CLASS A, B, C, D, AND E AIRSPACE AREAS; AIR TRAFFIC SERVICE ROUTES; AND REPORTING POINTS

■ 1. The authority citation for Part 71 continues to read as follows:

Authority: 49 U.S.C. 106(g); 40103, 40113, 40120; E.O. 10854, 24 FR 9565, 3 CFR, 1959–1963 Comp., p. 389.

§ 71.1 [Amended]

■ 2. The incorporation by reference in 14 CFR 71.1 of Federal Aviation Administration Order 7400.9W, Airspace Designations and Reporting Points, dated August 8, 2012, effective September 15, 2012, is amended as follows:

Paragraph 6005 Class E Airspace Areas Extending Upward From 700 Feet or More Above the Surface of the Earth.

* * * * *

ASO TN E5 Tuskegee, AL [Amended]

Moten Field Municipal Airport, AL
(Lat. 32°27′38″ N., long. 85°40′48″ W.)

That airspace extending upward from 700 feet above the surface within a 6.7-mile radius of Moten Field Municipal Airport.

Issued in College Park, Georgia, on March 20, 2013.

Barry A. Knight,

Manager, Operations Support Group, Eastern Service Center, Air Traffic Organization.

[FR Doc. 2013–07115 Filed 3–27–13; 8:45 am]

BILLING CODE 4910–13–P

DEPARTMENT OF TRANSPORTATION

Federal Aviation Administration

14 CFR Part 71

[Docket No. FAA–2012–0792; Airspace Docket No. 12–ANE–13]

Proposed Establishment of Class E Airspace; Boothbay, ME

AGENCY: Federal Aviation Administration (FAA), DOT.

ACTION: Notice of proposed rulemaking (NPRM).

SUMMARY: This action proposes to establish Class E Airspace at Boothbay, ME, to accommodate a new Area Navigation (RNAV) Global Positioning System (GPS) special Standard Instrument Approach Procedure (SIAP) serving St. Andrews Hospital Heliport. This action would enhance the safety and airspace management of Instrument Flight Rules (IFR) operations within the National Airspace System.

DATES: Comments must be received on or before May 13, 2013.

ADDRESSES: Send comments on this rule to: U.S. Department of Transportation, Docket Operations, West Building Ground Floor, Room W12–140, 1200 New Jersey SE., Washington, DC 20590–0001; Telephone: 1–800–647–5527; Fax: 202–493–2251. You must identify the Docket Number FAA–2012–0792;

Airspace Docket No. 12–ANE–13, at the beginning of your comments. You may also submit and review received comments through the Internet at *http://www.regulations.gov.*

FOR FURTHER INFORMATION CONTACT: John Fornito, Operations Support Group, Eastern Service Center, Federal Aviation Administration, P.O. Box 20636, Atlanta, Georgia 30320; telephone (404) 305–6364.

SUPPLEMENTARY INFORMATION:

Comments Invited

Interested persons are invited to comment on this rule by submitting such written data, views, or arguments, as they may desire. Comments that provide the factual basis supporting the views and suggestions presented are particularly helpful in developing reasoned regulatory decisions on the proposal. Comments are specifically invited on the overall regulatory, aeronautical, economic, environmental, and energy-related aspects of the proposal.

Communications should identify both docket numbers (FAA Docket No. FAA–2012–0792; Airspace Docket No. 12–ANE–13) and be submitted in triplicate to the Docket Management System (see **ADDRESSES** section for address and phone number). You may also submit comments through the Internet at *http://www.regulations.gov*.

Persons wishing the FAA to acknowledge receipt of their comments on this action must submit with those comments a self-addressed stamped postcard on which the following statement is made: ''Comments to Docket No. FAA–2012–0792; Airspace Docket No. 12–ANE–13.'' The postcard will be date/time stamped and returned to the commenter.

All communications received before the specified closing date for comments will be considered before taking action on the proposed rule. The proposal contained in this notice may be changed in light of the comments received. A report summarizing each substantive public contact with FAA personnel concerned with this rulemaking will be filed in the docket.

Availability of NPRMs

An electronic copy of this document may be downloaded from and comments submitted through *http://www.regulations.gov*. Recently published rulemaking documents can also be accessed through the FAA's Web page at *http://www.faa.gov/airports_airtraffic/air_traffic/publications/airspace_amendments/*.

You may review the public docket containing the proposal, any comments received and any final disposition in person in the Dockets Office (see the **ADDRESSES** section for address and phone number) between 9:00 a.m. and 5:00 p.m., Monday through Friday, except Federal Holidays. An informal docket may also be examined during normal business hours at the office of the Eastern Service Center, Federal Aviation Administration, room 350, 1701 Columbia Avenue, College Park, Georgia 30337.

Persons interested in being placed on a mailing list for future NPRM's should contact the FAA's Office of Rulemaking, (202) 267–9677, to request a copy of Advisory circular No. 11–2A, Notice of Proposed Rulemaking distribution System, which describes the application procedure.

The Proposal

The FAA is considering an amendment to Title 14, Code of Federal Regulations (14 CFR) part 71 to establish Class E airspace at Boothbay, ME providing the controlled airspace required to support the new Copter RNAV (GPS) special standard instrument approach procedures for St. Andrews Hospital Heliport. Controlled airspace extending upward from 700 feet above the surface is required for IFR operations within a 6-mile radius of the point in space coordinates of the heliport.

Class E airspace designations are published in Paragraph 6005 of FAA order 7400.9W, dated August 8, 2012, and effective September 15, 2012, which is incorporated by reference in 14 CFR 71.1. The Class E airspace designation listed in this document will be published subsequently in the Order.

The FAA has determined that this proposed regulation only involves an established body of technical regulations for which frequent and routine amendments are necessary to keep them operationally current. It, therefore, (1) is not a ''significant regulatory action'' under Executive Order 12866; (2) is not a ''significant rule'' under DOT Regulatory Policies and Procedures (44 FR 11034; February 26, 1979); and (3) does not warrant preparation of a Regulatory Evaluation as the anticipated impact is so minimal. Since this is a routine matter that will only affect air traffic procedures and air navigation, it is certified that this proposed rule, when promulgated, would not have a significant economic impact on a substantial number of small entities under the criteria of the Regulatory Flexibility Act.

The FAA's authority to issue rules regarding aviation safety is found in Title 49 of the United States Code. Subtitle I, Section 106 describes the authority of the FAA Administrator. Subtitle VII, Aviation Programs, describes in more detail the scope of the agency's authority. This proposed rulemaking is promulgated under the authority described in Subtitle VII, Part, A, Subpart I, Section 40103. Under that section, the FAA is charged with prescribing regulations to assign the use of airspace necessary to ensure the safety of aircraft and the efficient use of airspace. This proposed regulation is within the scope of that authority as it would establish Class E airspace at St. Andrews Hospital Heliport, Boothbay, ME.

This proposal will be subject to an environmental analysis in accordance with FAA Order 1050.1E, ''Environmental Impacts: Policies and Procedures'' prior to any FAA final regulatory action.

Lists of Subjects in 14 CFR Part 71

Airspace, Incorporation by reference, Navigation (air).

The Proposed Amendment

In consideration of the foregoing, the Federal Aviation Administration proposes to amend 14 CFR part 71 as follows:

PART 71—DESIGNATION OF CLASS A, B, C, D, AND CLASS E AIRSPACE AREAS; AIR TRAFFIC SERVICE ROUTES; AND REPORTING POINTS

■ 1. The authority citation for Part 71 continues to read as follows:

Authority: 49 U.S.C. 106(g); 40103, 40113, 40120; E.O. 10854, 24 FR 9565, 3 CFR, 1959–1963 Comp., p. 389.

§ 71.1 [Amended]

■ 2. The incorporation by reference in 14 CFR 71.1 of Federal Aviation Administration Order 7400.9W, Airspace Designations and Reporting Points, dated August 8, 2012, effective September 15, 2012, is amended as follows:

Paragraph 6005 Class E Airspace Areas Extending Upward From 700 Feet or More Above the Surface of the Earth.

* * * * *

ASO ME E5 Boothbay, ME [New]

St. Andrews Hospital Heliport, ME
(Lat. 43°51′2″ N., long. 69°38′16″ W.)
Point in Space Coordinates
(Lat. 43°51′2″ N., long. 69′38′16″ W.)

That airspace extending upward from 700 feet above the surface within a 6- mile radius of the Point in Space Coordinates (lat. 43°51′2″N., long. 69°38′16″W.) serving St. Andrews Hospital Heliport.

Issued in College Park, Georgia, on March 20, 2013.

Barry A. Knight,

Manager, Operations Support Group, Eastern Service Center, Air Traffic Organization.

[FR Doc. 2013–07110 Filed 3–27–13; 8:45 am]

BILLING CODE 4910–13–P

DEPARTMENT OF TRANSPORTATION

Federal Aviation Administration

14 CFR Part 71

[Docket No. FAA–2012–0793; Airspace Docket No. 12–ANE–14]

Proposed Establishment of Class E Airspace; Bass Harbor, ME

AGENCY: Federal Aviation Administration (FAA), DOT.

ACTION: Notice of proposed rulemaking (NPRM).

SUMMARY: This action proposes to establish Class E Airspace at Bass Harbor, ME, to accommodate a new Area Navigation (RNAV) Global Positioning System (GPS) special Standard Instrument Approach Procedure (SIAP) serving Bass Harbor Heliport. This action would enhance the safety and airspace management of Instrument Flight Rules (IFR) operations within the National Airspace System.

DATES: Comments must be received on or before May 13, 2013.

ADDRESSES: Send comments on this rule to: U.S. Department of Transportation, Docket Operations, West Building Ground Floor, Room W12–140, 1200 New Jersey SE., Washington, DC 20590–0001; Telephone: 1–800–647–5527; Fax: 202–493–2251. You must identify the Docket Number FAA–2012–0793; Airspace Docket No. 12–ANE–14, at the beginning of your comments. You may also submit and review received comments through the Internet at *http://www.regulations.gov.*

FOR FURTHER INFORMATION CONTACT: John Fornito, Operations Support Group, Eastern Service Center, Federal Aviation Administration, P.O. Box 20636, Atlanta, Georgia 30320; telephone (404) 305–6364.

SUPPLEMENTARY INFORMATION:

Comments Invited

Interested persons are invited to comment on this rule by submitting such written data, views, or arguments, as they may desire. Comments that provide the factual basis supporting the views and suggestions presented are particularly helpful in developing reasoned regulatory decisions on the proposal. Comments are specifically invited on the overall regulatory, aeronautical, economic, environmental, and energy-related aspects of the proposal.

Communications should identify both docket numbers (FAA Docket No. FAA–2012–0793; Airspace Docket No. 12–ANE–14) and be submitted in triplicate to the Docket Management System (see **ADDRESSES** section for address and phone number). You may also submit comments through the Internet at *http://www.regulations.gov.*

Persons wishing the FAA to acknowledge receipt of their comments on this action must submit with those comments a self-addressed stamped postcard on which the following statement is made: ''Comments to Docket No. FAA–2012–0793; Airspace Docket No. 12–ANE–14.'' The postcard will be date/time stamped and returned to the commenter.

All communications received before the specified closing date for comments will be considered before taking action on the proposed rule. The proposal contained in this notice may be changed in light of the comments received. A report summarizing each substantive public contact with FAA personnel concerned with this rulemaking will be filed in the docket.

Availability of NPRMs

An electronic copy of this document may be downloaded from and comments submitted through *http://www.regulations.gov.* Recently published rulemaking documents can also be accessed through the FAA's Web page at *http://www.faa.gov/airports_airtraffic/air_traffic/publications/airspace_amendments/.*

You may review the public docket containing the proposal, any comments received and any final disposition in person in the Dockets Office (see the **ADDRESSES** section for address and phone number) between 9:00 a.m. and 5:00 p.m., Monday through Friday, except Federal holidays. An informal docket may also be examined during normal business hours at the office of the Eastern Service Center, Federal Aviation Administration, Room 350, 1701 Columbia Avenue, College Park, Georgia 30337.

Persons interested in being placed on a mailing list for future NPRM's should contact the FAA's Office of Rulemaking, (202) 267–9677, to request a copy of Advisory Circular No. 11–2A, Notice of Proposed Rulemaking distribution System, which describes the application procedure.

The Proposal

The FAA is considering an amendment to Title 14, Code of Federal Regulations (14 CFR) part 71 to establish Class E airspace at Bass Harbor, ME providing the controlled airspace required to support the new Copter RNAV (GPS) special standard instrument approach procedures for Bass Harbor Heliport. Controlled airspace extending upward from 700 feet above the surface is required for IFR operations within a 6-mile radius of the point in space coordinates of the heliport.

Class E airspace designations are published in Paragraph 6005 of FAA order 7400.9W, dated August 8, 2012, and effective September 15, 2012, which is incorporated by reference in 14 CFR 71.1. The Class E airspace designation listed in this document will be published subsequently in the Order.

The FAA has determined that this proposed regulation only involves an established body of technical regulations for which frequent and routine amendments are necessary to keep them operationally current. It, therefore, (1) is not a ''significant regulatory action'' under Executive Order 12866; (2) is not a ''significant rule'' under DOT Regulatory Policies and Procedures (44 FR 11034; February 26, 1979); and (3) does not warrant preparation of a Regulatory Evaluation as the anticipated impact is so minimal. Since this is a routine matter that will only affect air traffic procedures and air navigation, it is certified that this proposed rule, when promulgated, would not have a significant economic impact on a substantial number of small entities under the criteria of the Regulatory Flexibility Act.

The FAA's authority to issue rules regarding aviation safety is found in Title 49 of the United States Code. Subtitle I, Section 106 describes the authority of the FAA Administrator. Subtitle VII, Aviation Programs, describes in more detail the scope of the agency's authority. This proposed rulemaking is promulgated under the authority described in Subtitle VII, Part, A, Subpart I, Section 40103. Under that section, the FAA is charged with prescribing regulations to assign the use of airspace necessary to ensure the safety of aircraft and the efficient use of airspace. This proposed regulation is within the scope of that authority as it would establish Class E airspace at Bass Harbor Heliport, Bass Harbor, ME.

This proposal will be subject to an environmental analysis in accordance with FAA Order 1050.1E, ''Environmental Impacts: Policies and

Procedures'' prior to any FAA final regulatory action.

Lists of Subjects in 14 CFR Part 71

Airspace, Incorporation by reference, Navigation (air).

The Proposed Amendment

In consideration of the foregoing, the Federal Aviation Administration proposes to amend 14 CFR part 71 as follows:

PART 71—DESIGNATION OF CLASS A, B, C, D, AND CLASS E AIRSPACE AREAS; AIR TRAFFIC SERVICE ROUTES; AND REPORTING POINTS

■ 1. The authority citation for Part 71 continues to read as follows:

Authority: 49 U.S.C. 106(g); 40103, 40113, 40120; E.O. 10854, 24 FR 9565, 3 CFR, 1959–1963 Comp., p. 389.

§ 71.1 [Amended]

■ 2. The incorporation by reference in 14 CFR 71.1 of Federal Aviation Administration Order 7400.9W, Airspace Designations and Reporting Points, dated August 8, 2012, effective September 15, 2012, is amended as follows:

Paragraph 6005 Class E Airspace Areas Extending Upward From 700 Feet or More Above the Surface of the Earth.

* * * * *

ASO ME E5 Bass Harbor, ME [New]

Bass Harbor Heliport, ME
(Lat. 44°15′16″ N., long. 68°20′57″ W.)
Point in Space Coordinates
(Lat. 44°15′16″ N., long. 68°20′57″ W.)

That airspace extending upward from 700 feet above the surface within a 6-mile radius of the Point in Space Coordinates (lat. 44°15′16″ N., long. 68°20′57″ W.) serving Bass Harbor Heliport.

Issued in College Park, Georgia, on March 20, 2013.

Barry A. Knight,

Manager, Operations Support Group, Eastern Service Center, Air Traffic Organization.

[FR Doc. 2013–07112 Filed 3–27–13; 8:45 am]

BILLING CODE 4910–13–P

DEPARTMENT OF TRANSPORTATION

Federal Aviation Administration

14 CFR Part 91

[Docket No. FAA–2013–0061]

Public Meeting: Unmanned Aircraft Systems Test Site Program; Privacy Approach

AGENCY: Federal Aviation Administration, DOT.

ACTION: Notice of public engagement session.

SUMMARY: The FAA will be holding a public engagement session on Wednesday, April 3, 2013, on the proposed privacy policy approach for the unmanned aircraft systems (UAS) test site program. The FAA is seeking the views from the public with respect to proposed privacy language to be included in agreements with each test site operator.

DATES: The session will be held via teleconference on Wednesday, April 3, 2013, beginning at 12 noon Eastern Daylight Savings Time and ending no later than 2 p.m. Eastern Daylight Savings Time.

FOR FURTHER INFORMATION CONTACT: Gregory C. Carter, Office of the Chief Counsel, Federal Aviation Administration, 800 Independence Ave. SW., Washington, DC 20591; email: *9-AGC–UASPrivacy@faa.gov.*

SUPPLEMENTARY INFORMATION: This document is a follow-on to a Notice of availability and request for comments published in the **Federal Register** on February 22, 2013 (78 FR 12259), Docket No. FAA–2013–0061. In that document, the agency described its proposed privacy plan for the UAS test site program and requested comments on that proposal. The agency also stated that it would provide details (including the date and time) for the engagement session sufficiently in advance of the meeting to facilitate broad participation. This document provides those details. The agency will post information on how to register for the public meeting at *http://www.faa.gov/about/initiatives/uas/* when all details are finalized. This Web site will also provide instructions on how to participate in the engagement session.

As to the meeting itself, the FAA will provide an overview of the FAA's UAS Test Site Program (including Section 322 (c) of the FAA's Reform and Modernization Act of 2012) and the proposed privacy plan. The agency may also invite short statements from one to two representatives from advocacy interest groups and the UAS industry. After the introductory statements and overview, the FAA will take comments from participants regarding the agency's proposed privacy plan that would apply to each UAS test site selected under the program. At some later time, after considering comments made during the engagement session as well as comments received during the comment period, FAA will notify the public about any further action the agency intends to take.

Background: On February 14, 2012, Congress mandated that the FAA, coordinating with the National Aeronautics and Space Administration and the Department of Defense, develop a test site program for the integration of unmanned aircraft systems in to the National Airspace System. The overall purpose of this test site program is to develop a body of data and operational experiences to inform integration and the safe operation of these aircraft in the National Airspace System. On Friday, February 22, 2013, the FAA published in the **Federal Register** a Notice of availability and request for comment soliciting comments on the FAA's proposed approach for addressing the privacy questions raised by the public and Congress with regard to the operation of unmanned aircraft systems within the test site program (78 FR 12259).

The proposed privacy requirements for which comments are requested are as follows:

(1) The Site Operator must ensure that there are privacy policies governing all activities conducted under the OTA [Other Transaction Agreement], including the operation and relevant activities of the UASs authorized by the Site Operator. Such privacy policies must be available publically, and the Site Operator must have a mechanism to receive and consider comments on its privacy policies. In addition, these policies should be informed by Fair Information Practice Principles. The privacy policies should be updated as necessary to remain operationally current and effective. The Site Operator must ensure the requirements of this paragraph are applied to all operations conducted under the OTA.

(2) The Site Operator and its team members are required to operate in accordance with Federal, state, and other laws regarding the protection of an individual's right to privacy. Should criminal or civil charges be filed by the U.S. Department of Justice or a state's law enforcement authority over a potential violation of such laws, the FAA may take appropriate action, including suspending or modifying the relevant operational authority (e.g., Certificate of Operation, or OTA), until the proceedings are completed. If the proceedings demonstrate the operation was in violation of the law, the FAA may terminate the relevant operational authority.

(3) If over the lifetime of this Agreement, any legislation or regulation, which may have an impact on UAS or to the privacy interests of entities affected by any operation of any UAS operating at the Test Site, is

enacted or otherwise effectuated, such legislation or regulation will be applicable to the OTA, and the FAA may update or amend the OTA to reflect these changes.

(4) Transmission of data from the Site Operator to the FAA or its designee must only include those data listed in Appendix B to the OTA. (Appendix B to the OTA is available as part of the SIR [Screening Information Request] at *http://faaco.faa.gov.*)

The FAA anticipates that test site operator privacy practices as discussed in their privacy policies will help inform the dialogue among policymakers, privacy advocates, and the industry regarding broader questions concerning the use of UAS technologies. The privacy requirements proposed here are specifically designed for the operation of the UAS Test Sites. They are not intended to pre-determine the long-term policy and regulatory framework under which commercial UASs would operate. Rather, they aim to assure maximum transparency of privacy policies associated with UAS test site operations in order to engage all stakeholders in discussion about which privacy issues are raised by UAS operations and how law, public policy, and the industry practices should respond to those issues in the long run.

Issued in Washington, DC on March 21, 2013.

Nathan Tash,

Assistant Chief Counsel, Acquisition and Fiscal Law Division, Federal Aviation Administration.

[FR Doc. 2013–07280 Filed 3–27–13; 8:45 am]

BILLING CODE 4910–13–P

DEPARTMENT OF HOMELAND SECURITY

Coast Guard

33 CFR Part 117

[Docket No. USCG–2013–0144]

Drawbridge Operation Regulations; Upper Mississippi River, Rock Island, IL

AGENCY: Coast Guard, DHS.

ACTION: Notice of deviation from drawbridge regulation.

SUMMARY: The Coast Guard has issued a temporary deviation from the operating schedule that governs the Rock Island Railroad and Highway Drawbridge across the Upper Mississippi River, mile 482.9, at Rock Island, Illinois. The deviation is necessary to allow the Quad City Marathon to cross the bridge. This deviation allows the bridge to be maintained in the closed-to-navigation position for four hours.

DATES: This deviation is effective from 7:30 a.m. to 11:30 a.m. on September 22, 2013.

ADDRESSES: The docket for this deviation, [USCG–2013–0144] is available at *http://www.regulations.gov.* Type the docket number in the ''SEARCH'' box and click ''SEARCH.'' Click on Open Docket Folder on the line associated with this deviation. You may also visit the Docket Management Facility in Room W12–140 on the ground floor of the Department of Transportation West Building, 1200 New Jersey Avenue SE., Washington, DC 20590, between 9 a.m. and 5 p.m., Monday through Friday, except Federal holidays.

FOR FURTHER INFORMATION CONTACT: If you have questions on this temporary deviation, call or email Eric A. Washburn, Bridge Administrator, Western Rivers, Coast Guard; telephone (314) 269–2378, email *Eric.Washburn@uscg.mil.* If you have questions on viewing the docket, call Barbara Hairston, Program Manager, Docket Operations, telephone (202) 366–9826.

SUPPLEMENTARY INFORMATION: The U.S. Army Rock Island Arsenal requested a temporary deviation for the Rock Island Railroad and Highway Drawbridge, across the Upper Mississippi River, mile 482.9, at Rock Island, Illinois to remain in the closed-to-navigation position for a four hour period from 7:30 a.m. to 11:30 a.m., September 22, 2013, while a run/walk is held between the cities of Davenport, IA and Rock Island, IL. The Rock Island Railroad and Highway Drawbridge currently operates in accordance with 33 CFR 117.5, which states the general requirement that drawbridges shall open promptly and fully for the passage of vessels when a request to open is given in accordance with the subpart.

There are no alternate routes for vessels transiting this section of the Upper Mississippi River.

The Rock Island Railroad and Highway Drawbridge, in the closed-to-navigation position, provides a vertical clearance of 23.8 feet above normal pool. Navigation on the waterway consists primarily of commercial tows and recreational watercraft. This temporary deviation has been coordinated with waterway users. No objections were received.

In accordance with 33 CFR 117.35(e), the drawbridge must return to its regular operating schedule immediately at the end of the effective period of this temporary deviation. This deviation from the operating regulations is authorized under 33 CFR 117.35.

Dated: March 14, 2013.

Eric A. Washburn,

Bridge Administrator, Western Rivers.

[FR Doc. 2013–07145 Filed 3–27–13; 8:45 am]

BILLING CODE 9110–04–P

DEPARTMENT OF EDUCATION

34 CFR Chapter III

[CFDA Number: 84.133P–1.]

Proposed Priority—National Institute on Disability and Rehabilitation Research—Advanced Rehabilitation Research Training Program

AGENCY: Office of Special Education and Rehabilitative Services, Department of Education.

ACTION: Proposed priority.

SUMMARY: The Assistant Secretary for Special Education and Rehabilitative Services proposes a priority for the Advanced Rehabilitation Research Training (ARRT) program under the Disability and Rehabilitation Research Projects and Centers Program administered by the National Institute on Disability and Rehabilitation Research (NIDRR). The Assistant Secretary may use this priority for competitions in fiscal year (FY) 2013 and later years. We take this action to ensure that NIDRR's resources are appropriately allocated across the three outcome domains of individual well-being—community living and participation, employment, and health and function. We intend this priority to strengthen the capacity of the disability and rehabilitation field to train qualified individuals, including individuals with disabilities, to conduct high-quality, advanced multidisciplinary rehabilitation research; and through this training contribute to improved outcomes for individuals with disabilities across the domains of community living and participation, employment, and health and function.

DATES: We must receive your comments on or before April 29, 2013.

ADDRESSES: Address all comments about this notice to Marlene Spencer, U.S. Department of Education, 400 Maryland Avenue SW., room 5133, Potomac Center Plaza (PCP), Washington, DC 20202–2700.

If you prefer to send your comments by email, use the following address: *marlene.spencer@ed.gov.* You must include the phrase ''Proposed Priority

for ARRT Projects'' in the subject line of your electronic message.

FOR FURTHER INFORMATION CONTACT: Marlene Spencer. Telephone: (202) 245–7532 or by email: *marlene.spencer@ed.gov*.

If you use a telecommunications device for the deaf (TDD) or a text telephone (TTY), call the Federal Relay Service (FRS), toll free, at 1–800–877–8339.

SUPPLEMENTARY INFORMATION: This notice of proposed priority is in concert with NIDRR's Long-Range Plan (Plan). The currently approved Plan, which was published in the **Federal Register** on February 15, 2006 (71 FR 8166), can be accessed on the Internet at the following site: *www2.ed.gov/legislation/FedRegister/other/2006-1/021506d.html.*

Through the implementation of the Plan, NIDRR seeks to: (1) Improve the quality and utility of disability and rehabilitation research; (2) foster an exchange of expertise, information, and training methods to facilitate the advancement of knowledge and understanding of the unique needs of traditionally underserved populations; (3) determine best strategies and programs to improve rehabilitation outcomes for underserved populations; (4) identify research gaps; (5) identify mechanisms for integrating research and practice; and (6) disseminate findings.

This notice proposes a new priority that NIDRR intends to use in FY 2013 and possibly later years. However, nothing precludes NIDRR from publishing additional priorities, if needed. Furthermore, NIDRR is under no obligation to make an award using this priority. The decision to make an award will be based on the quality of applications received and available funding.

Invitation to Comment: We invite you to submit comments regarding this notice. To ensure that your comments have maximum effect in developing the notice of final priority, we urge you to identify clearly the specific topic that each comment addresses.

We invite you to assist us in complying with the specific requirements of Executive Orders 12866 and 13563 and their overall requirement of reducing regulatory burden that might result from this proposed priority. Please let us know of any further ways we could reduce potential costs or increase potential benefits while preserving the effective and efficient administration of the program.

During and after the comment period, you may inspect all public comments about this notice in room 5133, 550 12th Street, SW., PCP, Washington, DC, between the hours of 8:30 a.m. and 4:00 p.m., Washington, DC time, Monday through Friday of each week except Federal holidays. *Assistance to Individuals with Disabilities in Reviewing the Rulemaking Record:* On request we will provide an appropriate accommodation or auxiliary aid to an individual with a disability who needs assistance to review the comments or other documents in the public rulemaking record for this notice. If you want to schedule an appointment for this type of accommodation or auxiliary aid, please contact the person listed under **FOR FURTHER INFORMATION CONTACT**.

Purpose of Program: The purpose of the Disability and Rehabilitation Research Projects and Centers Program is to plan and conduct research, demonstration projects, training, and related activities, including international activities, to develop methods, procedures, and rehabilitation technology, that maximize the full inclusion and integration into society, employment, independent living, family support, and economic and social self-sufficiency of individuals with disabilities, especially individuals with the most severe disabilities, and to improve the effectiveness of services authorized under the Rehabilitation Act of 1973, as amended (Rehabilitation Act).

Advanced Rehabilitation Research Training:

The purpose of NIDRR's ARRT program, which is funded through the Disability and Rehabilitation Research Projects and Centers Program, is to provide advanced research training and experience to individuals with doctorates, or similar advanced degrees, who have clinical or other relevant experience. ARRT projects train rehabilitation researchers, including researchers with disabilities, with particular attention to research areas that support the implementation and objectives of the Rehabilitation Act, and that improve the effectiveness of services authorized under the Rehabilitation Act.

Additional information on the ARRT program can be found at: *www.ed.gov/rschstat/research/pubs/res-program.html#DRRP*.

Program Authority: 29 U.S.C. 762(g) and 764(a).

Applicable Program Regulations: 34 CFR part 350.

Proposed Priority: This notice contains one proposed priority.

Advanced Rehabilitation Research Training Program.

Background: NIDRR's mission is to support the generation of new knowledge and promote its effective use to improve the abilities of individuals with disabilities to participate in community activities of their choice and to enhance society's capacity to provide full opportunities and accommodations for these individuals. NIDRR research focuses on major life domains as identified in NIDRR's Final Long-Range Plan for FY 2005–2009 (**Federal Register**, 2006): (1) Employment, (2) Participation and Community Living, and (3) Health and Function. To help ensure that rehabilitation researchers receive advanced research training and experience consistent with the outcome areas identified in NIDRR's Long-Range Plan, NIDRR is proposing priorities under the ARRT program for the Plan's major life domains.

References: National Institute on Disability and Rehabilitation Research (2006). Notice of Final Long-Range Plan for Fiscal Years 2005–2009. **Federal Register**. Vol. 71, No 31. P 8166–8200.

Proposed Priority: The Assistant Secretary for Special Education and Rehabilitative Services proposes a new priority for the Advanced Rehabilitation Research Training (ARRT) program. For FY 2013, and potential subsequent years, ARRT projects must provide advanced research training to eligible individuals to enhance their capacity to conduct high-quality multidisciplinary rehabilitation and disability research to improve outcomes for individuals with disabilities in one of NIDRR's major domains of individual well-being: (a) Community living and participation, (b) employment, or (c) health and function.

Types of Priorities: When inviting applications for a competition using one or more priorities, we designate the type of each priority as absolute, competitive preference, or invitational through a notice in the **Federal Register**. The effect of each type of priority follows:

Absolute priority: Under an absolute priority, we consider only applications that meet the priority (34 CFR 75.105(c)(3)).

Competitive preference priority: Under a competitive preference priority, we give competitive preference to an application by (1) awarding additional points, depending on the extent to which the application meets the priority (34 CFR 75.105(c)(2)(i)); or (2) selecting an application that meets the priority over an application of comparable merit that does not meet the priority (34 CFR 75.105(c)(2)(ii)).

Invitational priority: Under an invitational priority, we are particularly interested in applications that meet the priority. However, we do not give an application that meets the priority a

preference over other applications (34 CFR 75.105(c)(1)).

Final Priority: We will announce the final priority in a notice in the **Federal Register**. We will determine the final priority after considering responses to this notice and other information available to the Department. This notice does not preclude us from proposing additional priorities, requirements, definitions, or selection criteria, subject to meeting applicable rulemaking requirements.

Note: This notice does *not* solicit applications. In any year in which we choose to use this priority, we invite applications through a notice in the **Federal Register**.

Executive Orders 12866 and 13563

Regulatory Impact Analysis

Under Executive Order 12866, the Secretary must determine whether this regulatory action is ''significant'' and, therefore, subject to the requirements of the Executive order and subject to review by the Office of Management and Budget (OMB). Section 3(f) of Executive Order 12866 defines a ''significant regulatory action'' as an action likely to result in a rule that may—

(1) Have an annual effect on the economy of $100 million or more, or adversely affect a sector of the economy, productivity, competition, jobs, the environment, public health or safety, or State, local, or tribal governments or communities in a material way (also referred to as an ''economically significant'' rule);

(2) Create serious inconsistency or otherwise interfere with an action taken or planned by another agency;

(3) Materially alter the budgetary impacts of entitlement grants, user fees, or loan programs or the rights and obligations of recipients thereof; or

(4) Raise novel legal or policy issues arising out of legal mandates, the President's priorities, or the principles stated in the Executive order.

This proposed regulatory action is not a significant regulatory action subject to review by OMB under section 3(f) of Executive Order 12866.

We have also reviewed this regulatory action under Executive Order 13563, which supplements and explicitly reaffirms the principles, structures, and definitions governing regulatory review established in Executive Order 12866. To the extent permitted by law, Executive Order 13563 requires that an agency—

(1) Propose or adopt regulations only on a reasoned determination that their benefits justify their costs (recognizing that some benefits and costs are difficult to quantify);

(2) Tailor its regulations to impose the least burden on society, consistent with obtaining regulatory objectives and taking into account—among other things and to the extent practicable—the costs of cumulative regulations;

(3) In choosing among alternative regulatory approaches, select those approaches that maximize net benefits (including potential economic, environmental, public health and safety, and other advantages; distributive impacts; and equity);

(4) To the extent feasible, specify performance objectives, rather than the behavior or manner of compliance a regulated entity must adopt; and

(5) Identify and assess available alternatives to direct regulation, including economic incentives—such as user fees or marketable permits—to encourage the desired behavior, or provide information that enables the public to make choices.

Executive Order 13563 also requires an agency ''to use the best available techniques to quantify anticipated present and future benefits and costs as accurately as possible.'' The Office of Information and Regulatory Affairs of OMB has emphasized that these techniques may include ''identifying changing future compliance costs that might result from technological innovation or anticipated behavioral changes.''

We are issuing this proposed priority only upon a reasoned determination that its benefits would justify its costs. In choosing among alternative regulatory approaches, we selected those approaches that would maximize net benefits. Based on the analysis that follows, the Department believes that this regulatory action is consistent with the principles in Executive Order 13563.

We also have determined that this regulatory action would not unduly interfere with State, local, and tribal governments in the exercise of their governmental functions.

In accordance with both Executive orders, the Department has assessed the potential costs and benefits, both quantitative and qualitative, of this regulatory action. The potential costs are those resulting from statutory requirements and those we have determined as necessary for administering the Department's programs and activities.

The benefits of the Disability and Rehabilitation Research Projects and Centers Programs have been well established over the years, as projects similar to the one envisioned by the proposed priority have been completed successfully. This proposed priority would strengthen the capacity of the rehabilitation and disability field to train qualified individuals, including individuals with disabilities, to conduct high-quality, advanced multidisciplinary research across all of NIDRR's major domains of community living and participation, employment, and health and function; and thereby contribute to advancing knowledge and solving problems encountered by individuals with disabilities of all ages.

Intergovernmental Review: This program is not subject to Executive Order 12372 and the regulations in 34 CFR part 79.

Accessible Format: Individuals with disabilities can obtain this document in an accessible format (e.g., braille, large print, audiotape, or compact disc) by contacting the Grants and Contracts Services Team, U.S. Department of Education, 400 Maryland Avenue SW., room 5075, PCP, Washington, DC 20202–2550. Telephone: (202) 245–7363. If you use a TDD or a TTY, call the FRS, toll free, at 1–800–877–8339.

Electronic Access to This Document: The official version of this document is the document published in the **Federal Register**. Free Internet access to the official edition of the **Federal Register** and the Code of Federal Regulations is available via the Federal Digital System at: *www.gpo.gov/fdsys.* At this site you can view this document, as well as all other documents of this Department published in the **Federal Register**, in text or Adobe Portable Document Format (PDF). To use PDF you must have Adobe Acrobat Reader, which is available free at the site.

You may also access documents of the Department published in the **Federal Register** by using the article search feature at: *www.federalregister.gov.* Specifically, through the advanced search feature at this site, you can limit your search to documents published by the Department.

Dated: March 25, 2013.

Michael Yudin,

Delegated the authority to Perform the functions and Duties of Assistant Secretary for Special Education and Rehabilitative Services.

[FR Doc. 2013–07260 Filed 3–27–13; 8:45 am]

BILLING CODE 4000–01–P

ENVIRONMENTAL PROTECTION AGENCY

40 CFR Part 52

[EPA–R09–OAR–2012–0920; FRL–9779–1]

Revision to the California State Implementation Plan, South Coast Air Quality Management Plan

AGENCY: Environmental Protection Agency (EPA).

ACTION: Proposed rule.

SUMMARY: EPA is proposing to approve a revision to the South Coast portion of the California State Implementation Plan (SIP). This revision concerns volatile organic compounds from organic liquid storage. We are proposing to approve a local rule to regulate these emission sources under the Clean Air Act (CAA or the Act).

DATES: Any comments on this proposal must arrive by April 29, 2013.

ADDRESSES: Submit comments, identified by docket number [EPA–R09–OAR–2012–0920], by one of the following methods:

1. *Federal eRulemaking Portal: www.regulations.gov.* Follow the on-line instructions.
2. *Email: steckel.andrew@epa.gov.*
3. *Mail or deliver:* Andrew Steckel (Air-4), U.S. Environmental Protection Agency Region IX, 75 Hawthorne Street, San Francisco, CA 94105–3901.

Instructions: All comments will be included in the public docket without change and may be made available online at *www.regulations.gov,* including any personal information provided, unless the comment includes Confidential Business Information (CBI) or other information whose disclosure is restricted by statute. Information that you consider CBI or otherwise protected should be clearly identified as such and should not be submitted through *www.regulations.gov* or email. *www.regulations.gov* is an ''anonymous access'' system, and EPA will not know your identity or contact information unless you provide it in the body of your comment. If you send email directly to EPA, your email address will be automatically captured and included as part of the public comment. If EPA cannot read your comment due to technical difficulties and cannot contact you for clarification, EPA may not be able to consider your comment. Electronic files should avoid the use of special characters, any form of encryption, and be free of any defects or viruses.

Docket: Generally, documents in the docket for this action are available electronically at *www.regulations.gov* and in hard copy at EPA Region IX, 75 Hawthorne Street, San Francisco, California 94105–3901. While all documents in the docket are listed at www.regulations.gov, some information may be publicly available only at the hard copy location (e.g., copyrighted material, large maps), and some may not be publicly available in either location (e.g., CBI). To inspect the hard copy materials, please schedule an appointment during normal business hours with the contact listed in the **FOR FURTHER INFORMATION CONTACT** section.

FOR FURTHER INFORMATION CONTACT: Cara Peck, EPA Region IX, (415) 972–3382, *peck.cara@epa.gov.*

SUPPLEMENTARY INFORMATION: This proposal addresses the following local rule: SCAQMD Rule 463 Organic Liquid Storage. In the Rules and Regulations section of this **Federal Register**, we are approving this local rule in a direct final action without prior proposal because we believe these SIP revisions are not controversial. If we receive adverse comments, however, we will publish a timely withdrawal of the direct final rule and address the comments in subsequent action based on this proposed rule.

We do not plan to open a second comment period, so anyone interested in commenting should do so at this time. If we do not receive adverse comments, no further activity is planned. For further information, please see the direct final action.

Dated: January 25, 2013.

Jared Blumenfeld,

Regional Administrator, Region IX.

[FR Doc. 2013–06427 Filed 3–27–13; 8:45 am]

BILLING CODE 6560–50–P

DEPARTMENT OF THE INTERIOR

Fish and Wildlife Service

50 CFR Part 17

[Docket No. FWS–R2–ES–2013–0058; 4500030113]

Endangered and Threatened Wildlife and Plants; 12-Month Finding on a Petition To List the Rosemont Talussnail as Endangered or Threatened

AGENCY: Fish and Wildlife Service, Interior.

ACTION: Notice of 12-month petition finding.

SUMMARY: We, the U.S. Fish and Wildlife Service (Service), announce a 12-month finding on a petition to list the Rosemont talussnail as endangered or threatened and to designate critical habitat under the Endangered Species Act of 1973, as amended (Act). After a review of the best available scientific information, we find that listing the Rosemont talussnail as an endangered or threatened species is not warranted, and, therefore, we are removing this species from the candidate list.

DATES: The finding announced in this document was made on March 28, 2013.

ADDRESSES: This finding is available on the Internet at *http://www.regulations.gov* at Docket Number FWS–R2–ES–2013–0058. Supporting documentation we used in preparing this finding is available for public inspection, by appointment, during normal business hours at the U.S. Fish and Wildlife Service, Arizona Ecological Services Field Office, 2321 W. Royal Palm Road, Suite 103, Phoenix, AZ 85021. Please submit any new information, materials, comments, or questions concerning this finding to the above street address.

FOR FURTHER INFORMATION CONTACT: Steve Spangle, Field Supervisor, U.S. Fish and Wildlife Service, Arizona Ecological Services Field Office, 2321 W. Royal Palm Road, Suite 103, Phoenix, AZ 85021; telephone 602–242–0210; facsimile 602–242–2513; email *incomingazcorr@fws.gov*. If you use a telecommunications device for the deaf (TDD), please call the Federal Information Relay Service (FIRS) at 800–877–8339.

SUPPLEMENTARY INFORMATION:

Background

Section 4(b)(3)(B) of the Act (16 U.S.C. 1531 *et seq.*) requires that, for any petition to revise the Federal Lists of Endangered and Threatened Wildlife and Plants that contains substantial scientific or commercial information that listing the species may be warranted, we make a finding within 12 months of the date of receipt of the petition. In this finding, we will determine that the petitioned action is: (1) Not warranted, (2) warranted, or (3) warranted, but the immediate proposal of a regulation implementing the petitioned action is precluded by other pending proposals to determine whether species are endangered or threatened, and expeditious progress is being made to add or remove qualified species from the Federal Lists of Endangered and Threatened Wildlife and Plants. Section 4(b)(3)(C) of the Act requires that we treat a petition for which the requested action is found to be warranted but precluded as though resubmitted on the date of such finding, that is, requiring a

subsequent finding to be made within 12 months. We must publish these 12-month findings in the **Federal Register**.

This section summarizes the information we evaluated in order to determine that the Rosemont talussnail is not a species or subspecies and cannot be listed as such under the Act, and to remove it from the candidate list. Additional material that we relied on is available in the Species Assessment and Listing Priority Assignment Form for the Rosemont talussnail. This form is available on our national endangered species Web site: *http://www.fws.gov/endangered/* (search for ''Rosemont talussnail'' in the Species Search box) or from the Federal eRulemaking Portal: *http://www.regulations.gov*. In the Search box, enter FWS–R2–ES–2013–0058, which is the docket number for this rulemaking.

Previous Federal Actions

On June 24, 2010, we received a petition from the Center for Biological Diversity requesting that Rosemont talussnail be listed as endangered or threatened and that critical habitat be designated under the Act. The petition clearly identified itself as such and included the requisite identification information for the petitioner required at 50 CFR 424.14(a). Our receipt of the petition coincidentally fell within the processing period for our candidate notice of review (CNOR) for Fiscal Year 2010. On November 10, 2010, we included the Rosemont talussnail in the annual CNOR (75 FR 69222) through our own internal candidate assessment process and independent of the petition process, because we had already begun the analysis prior to receiving the petition. Candidate species are species for which we have sufficient information on file to support a proposal to list as endangered or threatened, but for which preparation and publication of a proposal is precluded by higher priority listing actions. However, because we are required to address the petition and make the appropriate findings, even though we already determined the species met the definition of a candidate species, in that same CNOR, we made a 90-day substantial and a 12-month warranted-but-precluded finding for the Rosemont talussnail.

In a December 1, 2011, letter, we informed the petitioner that we had reviewed the information presented in the petition and determined that issuing an emergency regulation temporarily listing the Rosemont talussnail under section 4(b)(7) of the Act was not warranted. We explained that the species had been assigned candidate status. We also explained that per the Multi-district Litigation Stipulated Settlement Agreement (*WildEarth Guardians* v. *Salazar,* No. 1:10-mc-00377-EGS (D. DC); *Center for Biological Diversity* v. *Salazar,* No. 1:10-mc-00377-EGS (D.DC)), we are required to submit a proposed rule or a not-warranted 12-month finding to the **Federal Register** for the Rosemont talussnail in Fiscal Year 2013, which ends September 30, 2013. This not-warranted 12-month finding and the associated species assessment form fulfill that requirement of the Multi-district Litigation Settlement Agreement.

Species Information

The Rosemont talussnail was first described as a member of the family Helminthoglyptidae (Phylum Mollusca; Class Gastropoda, Subclass Pulmonata) described by Pilsbry (1939, pp. 348–349) from the northern end of the Santa Rita Mountains near Rosemont, Pima County, Arizona. Bequaert and Miller (1973, p. 115) and Turgeon *et al.* (1988, p. 146) subsequently recognized the Rosemont talussnail in their respective reviews of mollusks. However, Hoffman *et al.* (2012, pp. 310–313) recently demonstrated that the Rosemont talussnail was described in error and is actually the same species as the Santa Rita talussnail (*Sonorella walkeri*).

Initially, Pilsbry and Ferriss (1923, p. 90) treated the Rosemont talussnail from the northern end of the Santa Rita Mountains (Station 49 near Rosemont) as *Sonorella hesterna* .Pilsbry (1939, p. 349) later described the Rosemont talussnail as a full species, *S. rosemontensis,* based on a single shell collected at Station 49 (Ferriss 1917–1918, p. 2; Hoffman *et al.* 2012, pp. 1–2). However, in his description of *S. rosemontensis,* Pilsbry (1939, p. 349) stated, ''It was formerly considered to be identical with *S. hesterna,* but the well developed threads of the embryonic shell apparently indicate a different species. Were it not for the very different verge [male genitalia], this form would hardly be separated from *S. walkeri*.'' Hoffman *et al.* (2012, p. 309) determined that Pilsbry (1939) confused the shell of the specimen he dissected with that of *S. hesterna,* and mistakenly dissected the gentilia from a different species of *Sonorella.* Pilsbry (1939, p. 349) described the genitalia as ''very closely related to *S. arida* * * * being of the same general character.'' Based on his writings, Pilsbry was well aware of the fact that the distinct features of *S. rosemontensis* resembled two different known species.

The disparities in reproductive structures described for the Rosemont talussnail, *Sonorella rosemontensis,* were first noted in earnest by Miller (1967, p. 70) where he stated the genitalia ''resemble those of *S. walkeri.''* In discussing the Pilsbry (1939) description, Miller (1967, p. 70) went on to say that, ''It is probable that he [Pilsbry] dissected a specimen of *S. tumamocensis linearis* by mistake.'' Upon examination of genitalia, Miller (1967, p. 70) stated, ''*S. rosemontenis* is closely related in all respects to *S. walkeri*.'' These anatomical examinations revealed that the Rosemont talussnail, *S. rosemontensis,* closely resembles the Santa Rita talussnail, *S. walkeri,* strongly suggesting that the Rosemont talussnail may only be a subspecies of or the same species as the Santa Rita talussnail (Miller 1967, p. 70; Miller 1978, p. 115). In fact, the drawing of the reproductive organs of the Rosemont talussnail presented in Miller (1967, p. 260) does not appear to differ in any significant way from the reproductive organs of the Santa Rita talussnail (Hoffman *et al.* 2012, p. 309).

Although it was suggested that the Rosemont talussnail may be a subspecies of the Santa Rita talussnail (Miller 1967, p. 70; Miller 1978, p. 115), there is no information indicating such. A subspecies is a category in biological classification that ranks immediately below a species; it designates a population of a particular geographic region morphologically or genetically distinguishable from other such populations of the same species and capable of interbreeding successfully with them where its range overlaps theirs. Evidence suggests that the Rosemont and Santa Rita talussnail are simply the same species. Hoffman *et al.* (2012, p. 313) found no discernible differences in the shapes or sizes of the male or female reproductive organs among specimens, nor was there any discernible differences in the shape of the shells between the Rosemont talussnail and the Santa Rita talussnail. Therefore, based on the morphological data and the sympatric range of the Santa Rita and the Rosemont talussnails, Hoffman *et al.* (2012, p. 313) concluded that the Rosemont and Santa Rita talussnail are the same species.

Evaluation of Listable Entity

Under the Act, a ''species'' is defined as including any subspecies of fish or wildlife or plants, and any distinct population segment (DPS) of any species of vertebrate fish or wildlife which interbreeds when mature (16 U.S.C. 1532(16)).

Based on our review of the best available information, the original

description of the Rosemont talussnail (previously *Sonorella rosemontensis*) was made in error, and the taxonomic entity is actually the same species as the Santa Rita talussnail (*S. walkeri*). Therefore, we conclude that the Rosemont talussnail (*S. rosemontensis*) is not a species under section 3(16) of the Act. We have reviewed the relevant literature, and we also find that the Rosemont talussnail is not a subspecies of the Santa Rita talussnail. Additionally, invertebrates are precluded by statute from DPS consideration. Therefore, we conclude that the petitioned entity does not constitute a listable entity and cannot be listed under the Act.

Finding

Based on the best scientific and commercial information available, we find that the Rosemont talussnail is not a listable entity and cannot be listed under the Act. The Rosemont talussnail (*Sonorella rosemontensis*) was subsumed into the Santa Rita talussnail (*S. walkeri*), which is a widespread and common species whose distribution extends across southern Arizona from the Santa Rita and Atascosa Mountain Ranges in Santa Cruz County; the Whetstone Mountains of Cochise County; and south into Sonora, Mexico (Pilsbry and Ferris 1915, p. 395; Bequaert and Miller 1973, p. 115; Arizona Game and Fish Department 2008, p. 2). Please submit any new information concerning the status of, or threats to, the Santa Rita talussnail to our Arizona Ecological Services Field Office (see **ADDRESSES**) whenever it becomes available. New information will help us monitor the Santa Rita talussnail and encourage its conservation.

References Cited

A complete list of references cited is available on the Internet at *http://www.regulations.gov* at Docket Number FWS–R2–ES–2013–0058, in the Species Assessment and Listing Priority Assignment Form on the Internet at *http://www.fws.gov/endangered/,* and upon request from the Arizona Ecological Services Field Office (see **ADDRESSES**).

Authors

The primary authors of this notice are the staff members of the Arizona Ecological Services Field Office.

Authority

The authority for this section is section 4 of the Endangered Species Act of 1973, as amended (16 U.S.C. 1531 *et seq.*).

Dated: March 15, 2013.

Rowan W. Gould,

Deputy Director, Fish and Wildlife Service.

[FR Doc. 2013–07149 Filed 3–27–13; 8:45 am]

BILLING CODE 4310–55–P

DEPARTMENT OF THE INTERIOR

Fish and Wildlife Service

50 CFR Part 17

[Docket No. FWS–R2–ES–2013–0025; 4500030113]

RIN 1018–AZ43

Endangered and Threatened Wildlife and Plants; Listing as Endangered and Designation of Critical Habitat for Acuña Cactus and the Fickeisen Plains Cactus

AGENCY: Fish and Wildlife Service, Interior.

ACTION: Proposed rule; reopening of comment period.

SUMMARY: We, the U.S. Fish and Wildlife Service (Service), announce the reopening of the public comment period on our October 3, 2012, proposal to add the acuña cactus and Fickeisen plains cactus to the list of endangered species under the Endangered Species Act of 1973, as amended (Act). We also announce the reopening of comment on our October 3, 2012, proposal to designate critical habitat for the acuña cactus and Fickeisen plains cactus and the availability of a draft economic analysis of the proposed designation of critical habitat and an amended required determinations section for the proposal. We are reopening the comment period to allow all interested parties an opportunity to comment simultaneously on the proposals, the associated draft economic analysis for the critical habitat designation, and the amended required determinations. Comments previously submitted need not be resubmitted, as they will be fully considered in preparation of the final rules.

DATES: We will consider comments received or postmarked on or before April 29, 2013. Comments submitted electronically using the Federal eRulemaking Portal (see **ADDRESSES** section, below) must be received by 11:59 p.m. Eastern Time on the closing date. Any comments that we receive after the closing date may not be considered in the final decisions on these actions.

ADDRESSES: *Document availability:* You may obtain copies of the October 3, 2012, proposed rule on the internet at *http://www.regulations.gov* at Docket No. FWS–R2–ES–2012–0061 or by mail from the Arizona Ecological Services Field Office (see **FOR FURTHER INFORMATION CONTACT**). You may obtain a copy of the draft economic analysis at Docket No. FWS–R2–ES–2013–0025.

Written comments: You may submit written comments by one of the following methods:

(1) *Electronically:* Go to the Federal eRulemaking Portal: *http://www.regulations.gov.* Submit comments on the listing proposal to Docket No. FWS–R2–ES–2012–0061, and submit comments on the critical habitat proposal and associated draft economic analysis to Docket No. FWS–R2–ES–2013–0025. See **SUPPLEMENTARY INFORMATION** for an explanation of the two dockets.

(2) *By hard copy:* Submit comment on the listing proposal by U.S. mail or hand-delivery to: Public Comments Processing, Attn: FWS–R2–ES–2012–0061; Division of Policy and Directives Management; U.S. Fish and Wildlife Service; 4401 N. Fairfax Drive, MS 2042–PDM; Arlington, VA 22203. Submit comment on the critical habitat proposal and draft economic analysis by U.S. mail or hand-delivery to: Public Comments processing, Attn. FWS–R2–ES–2013–0025; Division of Policy and Directives Management; U.S. Fish and Wildlife Service; 4401 N. Fairfax Drive, MS 2042–PDM; Arlington, VA 22203.

We request that you send comments only by the methods described above. We will post all comments on *http://www.regulations.gov.* This generally means that we will post any personal information you provide us (see the Public Comments section below for more information).

FOR FURTHER INFORMATION CONTACT: Steve Spangle, Field Supervisor, U.S. Fish and Wildlife Service, Arizona Ecological Services Field Office, 2321 W. Royal Palm Road, Suite 103, Phoenix, AZ 85021; telephone (602) 242–0210; facsimile (602) 242–2513. Persons who use a telecommunications device for the deaf (TDD) may call the Federal Information Relay Service (FIRS) at 800–877–8339.

SUPPLEMENTARY INFORMATION:

Public Comments

We are reopening the comment period for our proposed listing determination and proposed critical habitat designation for *Echinomastus erectocentrus* var. *acunensis* (acuña cactus) and *Pediocactus peeblesianus* var. *fickeiseniae* (Fickeisen plains cactus) that was published in the **Federal Register** on October 3, 2012 (77

FR 60509). We are specifically seeking comments on the draft economic analysis, which is now available, for the critical habitat designation; see **ADDRESSES** for information on where to send your comments.

We are also notifying the public that we will publish two separate rules for the final listing determination and the final critical habitat determination for acuña cactus and Fickeisen plains cactus. The final listing rule will publish under the existing docket number, FWS–R2–ES–2012–0061, and the final critical habitat designation will publish under docket number FWS–R2–ES–2013–0025.

We request that you provide comments specifically on our listing determination under the existing docket number FWS–R2–ES–2012–0061. We will consider information and recommendations from all interested parties. We are particularly interested in comments concerning:

(1) Biological, commercial trade, or other relevant data concerning any threats (or lack thereof) to these species and regulations that may be addressing those threats.

(2) Additional information concerning the historical and current status, range, distribution, and population size of these species, including the locations of any additional populations of these species.

(3) Any information on the biological or ecological requirements of these species and ongoing conservation measures for these species and their habitat.

(4) Current or planned activities in the areas occupied by these species and possible impacts of these activities on these species.

We request that you provide comments specifically on the critical habitat determination and draft economic analysis under docket number FWS–R2–ES–2013–0025. We will consider information and recommendations from all interested parties. We are particularly interested in comments concerning:

(5) The reasons why we should or should not designate habitat as ''critical habitat'' under section 4 of the Act (16 U.S.C. 1531 *et seq.*) including whether there are threats to these species from human activity, the degree of which can be expected to increase due to the designation, and whether that increase in threat outweighs the benefit of designation such that the designation of critical habitat may not be prudent.

(6) Specific information on:

(a) The amount and distribution of habitat for acuña cactus or the Fickeisen plains cactus;

(b) What areas, that were occupied at the time of listing (or are currently occupied) and that contain features essential to the conservation of these species, should be included in the designation and why;

(c) Special management considerations or protection that may be needed in critical habitat areas we are proposing, including management for the potential effects of climate change; and

(d) What areas not occupied at the time of listing are essential to the conservation of the species and why.

(7) Land use designations and current or planned activities in the subject areas and their possible impacts on proposed critical habitat.

(8) Information on the projected and reasonably likely impacts of climate change on these species and their proposed critical habitat.

(9) Any probable economic, national security, or other relevant impacts of designating any area that may be included in the final designation; in particular, we seek information on any impacts on small entities or families, and the benefits of including or excluding areas from the proposed designation that are exhibit these impacts.

(10) Information on the extent to which the description of economic impacts in the draft economic analysis is complete and accurate.

(11) Whether any specific areas we are proposing for critical habitat designation should be considered for exclusion under section 4(b)(2) of the Act, and whether the benefits of potentially excluding any specific area outweigh the benefits of including that area under section 4(b)(2) of the Act.

(12) Whether the benefits of exclusion outweigh the benefits of including the area proposed as critical habitat for the Fickeisen plains cactus on the Navajo Nation based on the ''Navajo Nation Fickeisen Plains Cactus Management Plan'' submitted during the initial comment period.

(13) Whether Department of Defense lands (Barry M. Goldwater Range) proposed as critical habitat for the acuña cactus should be exempted under section 4(a)(3) from the critical habitat designation based on their revised integrated natural resources management plan submitted during the initial comment period.

(14) Additional information from the public as to the current status of the population of acuña cactus in subunit 1b of the proposed critical habitat designation to aid in our determination of whether this subunit meets the definition of critical habitat for the acuña cactus.

(15) Whether we could improve or modify our approach to designating critical habitat in any way to provide for greater public participation and understanding, or to better accommodate public concerns and comments.

If you submitted comments or information on the proposed rule (77 FR 60509) during the initial comment period from October 3, 2012, to December 3, 2012, please do not resubmit them. We have incorporated them into the public record, and we will fully consider them in the preparation of our final rules. On the basis of public comments and other relevant information, we may, during the development of our final determination on the proposed critical habitat designations, find that areas proposed are not essential, are appropriate for exclusion under section 4(b)(2) of the Act, or are not appropriate for exclusion.

You may submit your comments and materials concerning the proposed rule or draft economic analysis by one of the methods listed in the **ADDRESSES** section. We request that you send comments only by the methods described in the **ADDRESSES** section.

If you submit a comment via *http://www.regulations.gov,* your entire comment—including any personal identifying information—will be posted on the Web site. We will post all hardcopy comments on *http://www.regulations.gov* as well. If you submit a hardcopy comment that includes personal identifying information, you may request at the top of your document that we withhold this information from public review. However, we cannot guarantee that we will be able to do so.

Comments and materials we receive, as well as supporting documentation we used, will be available for public inspection on *http://www.regulations.gov* at Docket No. FWS–R2–ES–2012–0061 (for the proposed listings) and Docket No. FWS–R2–ES–2013–0025 (for the proposed critical habitat designations and draft economic analysis), or by appointment, during normal business hours, at the U.S. Fish and Wildlife Service, Arizona Ecological Services Field Office (see **FOR FURTHER INFORMATION CONTACT**). You may obtain copies of the proposed rule on the Internet at *http://www.regulations.gov* at Docket Number FWS–R2–ES–2012–0061 and the draft economic analysis at Docket No. FWS–R2–ES–2013–0025, or by mail from the

Arizona Ecological Services Field Office (see **FOR FURTHER INFORMATION CONTACT**).

Background

It is our intent to discuss only those topics directly relevant to the designation of critical habitat for the acuña cactus and the Fickeisen plains cactus in the remainder of this document. For more information on the species, their habitat, and previous Federal actions concerning the species, refer to the proposed listing rule and designation of critical habitat published in the **Federal Register** on October 3, 2012 (77 FR 60509). The proposed rule is available online at *http://www.regulations.gov* (at Docket Number FWS–R2–ES–2012–0061) or from the Arizona Ecological Services Field Office (see **FOR FURTHER INFORMATION CONTACT**).

Previous Federal Actions

On October 3, 2012, we published a proposed rule to list as endangered and designate critical habitat for the acuña cactus and the Fickeisen plains cactus (77 FR 60509). For the acuña cactus, we proposed to designate as critical habitat approximately 21,740 hectares (ha) (53,720 acres (ac)) in 6 units located in Maricopa, Pima, and Pinal Counties, Arizona. For the Fickeisen plains cactus, we proposed to designate as critical habitat approximately 19,901 ha (49,186 ac) in 9 units located in Coconino and Mohave Counties, Arizona. That proposal had a 60-day comment period, ending December 3, 2012. We will publish in the **Federal Register** a final listing determination and critical habitat designation for the acuña cactus and the Fickeisen plains cactus on or before October 3, 2013.

Critical Habitat

Section 3 of the Act defines critical habitat as the specific areas within the geographical area occupied by a species, at the time it is listed in accordance with the Act, on which are found those physical or biological features essential to the conservation of the species and that may require special management considerations or protection, and specific areas outside the geographical area occupied by a species at the time it is listed, upon a determination that such areas are essential for the conservation of the species. If the proposed critical habitat designation is made final, section 7 of the Act will prohibit destruction or adverse modification of critical habitat by any activity funded, authorized, or carried out by any Federal agency. Federal agencies proposing actions affecting critical habitat must consult with us on the effects of their proposed actions, under section 7(a)(2) of the Act.

Proposed Changes to Proposed Critical Habitat

On October 3, 2012, we proposed approximately 1,591 ha (3,931 ac) as acuña cactus critical habitat within Subunit 1b (Dripping Spring; 77 FR 60510, p. 60552). This Subunit was delineated from records of a 1952 collection of this species from an area south of Dripping Spring in Organ Pipe Cactus National Monument. This subunit is located in the southern part of Organ Pipe Cactus National Monument. During the comment period, we received information from the National Park Service indicating this general area has been visited frequently during surveys for cultural and natural resources and no acuña cactus plants were located. We are considering withdrawing this subunit from our final critical habitat designation; however, we are seeking additional information from the public as to the current status of this population and whether this area, if unoccupied, is essential for the conservation of the species.

Consideration of Impacts under Section 4(b)(2) of the Act

Section 4(b)(2) of the Act requires that we designate or revise critical habitat based upon the best scientific data available, after taking into consideration the economic impact, impact on national security, or any other relevant impact of specifying any particular area as critical habitat. We may exclude an area from critical habitat if we determine that the benefits of excluding the area outweigh the benefits of including the area as critical habitat, provided such exclusion will not result in the extinction of the species.

When considering the benefits of inclusion for an area, we consider the additional regulatory benefits that area would receive from the protection from adverse modification or destruction as a result of actions with a Federal nexus (activities conducted, funded, permitted, or authorized by Federal agencies), the educational benefits of mapping areas containing essential features that aid in the recovery of the listed species, and any benefits that may result from designation due to State or Federal laws that may apply to critical habitat.

When considering the benefits of exclusion, we consider, among other things, whether exclusion of a specific area is likely to result in conservation; the continuation, strengthening, or encouragement of partnerships; or implementation of a management plan. For the Fickeisen plains cactus, we are considering excluding the entirety of Unit 6 (Tiger Wash Unit) and Unit 7 (Little Colorado River Overlook Unit), and a portion of Subunit 8b (Gray Mountain Subunit) that is under the jurisdiction of the Navajo Nation. The Navajo Nation has submitted a management plan for the Fickeisen plains cactus on lands under its jurisdiction. For the acuña cactus, we are considering excluding the entirety of Subunit 3b (Cimarron Mountain Subunit) and a portion of Subunit 3a (Coffeepot Mountain Subunit) that is under the jurisdiction of the Tohono O'odham Nation based on a request from the Tohono O'odham Nation.

Consideration of Exemption under Section 4(a)(3) of the Act

For the acuña cactus, we are considering an exemption for a portion of Subunit 3a (Coffeepot Mountain Subunit) and the entirety of Subunit 4b (Sand Tank Mountains Subunit), which is proposed critical habitat for acuña cactus on Department of Defense lands (Barry M. Goldwater Range, under the jurisdiction of the U.S. Air Force). Section 4(a)(3) of the Act exempts Department of Defense lands from critical habitat if an integrated natural resources management plan is prepared and if the Secretary of the Interior determines that plan provides a benefit to the species for which critical habitat is proposed for designation. A revised management plan has been submitted to the Service for review. However, the final decision on whether to exclude or exempt any area will be based on the best scientific data available at the time of the final designation, including information obtained during the comment period and information about the economic impact of designation. Accordingly, we have prepared a draft economic analysis concerning the proposed critical habitat designation, which is available for review and comment (see **ADDRESSES** section).

Draft Economic Analysis

The purpose of the draft economic analysis is to identify and analyze the potential economic impacts associated with the proposed critical habitat designation for the acuña cactus and the Fickeisen plains cactus. The draft economic analysis separates conservation measures into two distinct categories according to ''without critical habitat'' and ''with critical habitat'' scenarios. The ''without critical habitat'' scenario represents the baseline for the analysis, considering protections otherwise afforded to the acuña cactus and the Fickeisen plains cactus (e.g.,

under the Federal listing and other Federal, State, and local regulations). The ''with critical habitat'' scenario describes the incremental impacts specifically due to designation of critical habitat for the species. In other words, these incremental conservation measures and associated economic impacts would not occur but for the designation. Conservation measures implemented under the baseline (without critical habitat) scenario are described qualitatively within the draft economic analysis, but economic impacts associated with these measures are not quantified. Economic impacts are only quantified for conservation measures implemented specifically due to the designation of critical habitat (i.e., incremental impacts). For a further description of the methodology of the analysis, see Chapter 2, ''FRAMEWORK FOR THE ANALYSIS,'' of the draft economic analysis.

The draft economic analysis provides estimated costs of the foreseeable potential economic impacts of the proposed critical habitat designation for the acuña cactus and the Fickeisen plains cactus over the next 20 years, which was determined to be the appropriate period for analysis because limited planning information is available for most activities to forecast activity levels for projects beyond a 20-year timeframe. It identifies potential incremental costs as a result of the proposed critical habitat designation; these are those costs attributed to critical habitat over and above those baseline costs attributed to listing.

The draft economic analysis quantifies economic impacts of the acuña cactus conservation efforts associated with the following categories of activity: (1) BLM Statewide and Resource Management Plans; (2) livestock grazing; (3) Barry M. Goldwater Range activities; (4) U.S. Mexican border activities; (5) Tohono O'odham Nation activities; and (6) transportation activities. The draft economic analysis quantifies economic impacts of the Fickeisen plains cactus conservation efforts associated with the following categories of activity: (1) Livestock grazing; (2) BLM Statewide Plans; (3) uranium mining; (4) activities on lands of the Navajo Nation; and (5) transportation activities.

Total present value incremental impacts are approximately $60,000 over 20 years following the designation of the acuña cactus critical habitat, assuming a 7 percent discount rate ($65,000 assuming a 3 percent discount rate). Total present value incremental impacts are approximately $39,000 over 20 years following the designation of the Fickeisen plains cactus critical habitat, assuming a 7 percent discount rate ($43,000 assuming a 3 percent discount rate). The total present value incremental impacts in areas considered for exclusion within the Fickeisen plains cactus critical habitat are approximately $22,000, assuming a 7 percent discount rate ($23,000 assuming a 3 percent discount rate). The majority of the incremental costs for both cacti is administrative in nature and results from the consideration of adverse modification in section 7 consultations. Additional costs are associated with conducting surveys for acuña cactus within the Barry M. Goldwater Range.

As stated earlier, we are soliciting data and comments from the public on the draft economic analysis, as well as all aspects of the proposed rule and our amended required determinations. We may revise the proposed rule or supporting documents to incorporate or address information we receive during the public comment period. In particular, we may exclude an area from critical habitat if we determine that the benefits of excluding the area outweigh the benefits of including the area, provided the exclusion will not result in the extinction of this species.

Required Determinations—Amended

In our October 3, 2012, proposed rule (77 FR 60509), we indicated that we would defer our determination of compliance with several statutes and executive orders until the information concerning potential economic impacts of the designation and potential effects on landowners and stakeholders became available in the draft economic analysis. We have now made use of the draft economic analysis data to make these determinations. In this document, we affirm the information in our proposed rule concerning Executive Orders (E.O.s) 12866 and 13563 (Regulatory Planning and Review), E.O. 12630 (Takings), E.O. 13132 (Federalism), E.O. 12988 (Civil Justice Reform), E.O. 13211 (Energy, Supply, Distribution, and Use), the Unfunded Mandates Reform Act (2 U.S.C. 1501 *et seq.*), the Paperwork Reduction Act of 1995 (44 U.S.C. 3501 *et seq.*), and the National Environmental Policy Act (42 U.S.C. 4321 *et seq.*). However, based on the draft economic analysis data, we are amending our required determinations concerning the Regulatory Flexibility Act (5 U.S.C. 601 *et seq.*) and the President's memorandum of April 29, 1994, ''Government-to-Government Relations with Native American Tribal Governments'' (59 FR 22951).

Regulatory Flexibility Act (5 U.S.C. 601 et seq.)

Under the Regulatory Flexibility Act (RFA; 5 U.S.C. 601 *et seq.*), as amended by the Small Business Regulatory Enforcement Fairness Act of 1996 (SBREFA; 5 U.S.C. 801 *et seq.*), whenever an agency is required to publish a notice of rulemaking for any proposed or final rule, it must prepare and make available for public comment a regulatory flexibility analysis that describes the effects of the rule on small entities (i.e., small businesses, small organizations, and small government jurisdictions). However, no regulatory flexibility analysis is required if the head of the agency certifies the rule will not have a significant economic impact on a substantial number of small entities. The SBREFA amended the RFA to require Federal agencies to provide a certification statement of the factual basis for certifying that the rule will not have a significant economic impact on a substantial number of small entities. Based on our draft economic analysis of the proposed designation, we provide our analysis for determining whether the proposed rule would result in a significant economic impact on a substantial number of small entities. Based on comments we receive, we may revise this determination as part of our final rulemaking.

According to the Small Business Administration, small entities include small organizations such as independent nonprofit organizations; small governmental jurisdictions, including school boards and city and town governments that serve fewer than 50,000 residents; and small businesses (13 CFR 121.201). Small businesses include manufacturing and mining concerns with fewer than 500 employees, wholesale trade entities with fewer than 100 employees, retail and service businesses with less than $5 million in annual sales, general and heavy construction businesses with less than $27.5 million in annual business, special trade contractors doing less than $11.5 million in annual business, and agricultural businesses with annual sales less than $750,000. To determine if potential economic impacts to these small entities are significant, we considered the types of activities that might trigger regulatory impacts under this designation as well as types of project modifications that may result. In general, the term ''significant economic impact'' is meant to apply to a typical small business firm's business operations.

To determine if the proposed designation of critical habitat for the

acuña cactus and the Fickeisen plains cactus would affect a substantial number of small entities, we considered the number of small entities affected within particular types of economic activities, such as uranium mining, livestock grazing, and transportation construction and maintenance projects. In order to determine whether it is appropriate for our agency to certify that this proposed rule would not have a significant economic impact on a substantial number of small entities, we considered each industry or category individually. In estimating the numbers of small entities potentially affected, we also considered whether their activities have any Federal involvement. Critical habitat designation will not affect activities that do not have any Federal involvement; designation of critical habitat only affects activities conducted, funded, permitted, or authorized by Federal agencies. In areas where the acuña cactus or the Fickeisen plains cactus are present, Federal agencies already are required to consult with us under section 7 of the Act on activities they fund, permit, or implement that may affect the species. If we finalize the proposed critical habitat designation, consultations to avoid the destruction or adverse modification of critical habitat would be incorporated into the existing consultation process.

In the draft economic analysis, we evaluated the potential economic effects on small entities resulting from implementation of conservation actions related to the proposed designation of critical habitat for the acuña cactus and the Fickeisen plains cactus. Fifty-five percent of land in the proposed designation for acuña cactus and 34 percent of the land in the proposed designation for Fickeisen plains cactus is federally owned. Anticipated incremental impacts in proposed critical habitat are primarily related to consultations on livestock grazing and other Federal land management activities. The remaining forecast impacts are anticipated to be conducted for transportation construction and maintenance projects, Partners for Fish and Wildlife programs, and activities on the Tohono O'odham or Navajo Nations' lands. The Arizona Department of Transportation (ADOT) and Tribes are not considered small entities. Therefore, of the remaining activities affected by the proposed critical habitat designations for the cacti, only one is expected to incur costs to small entities: uranium mining. One consultation is projected for the EZ uranium mine. This one consultation will result in impacts to Energy Fuels Inc. (operators of the EZ Mine) of approximately $900 on a present value basis, or approximately $80 on an annualized basis, which constitutes an impact of less than one-tenth of a percent of annual revenues. Of the activities affected by the proposed designation for the acuña cactus and the Fickeisen plains cactus, none is expected to incur incremental costs to third-party small entities. The forecast consultations either do not include third parties (programmatic consultations, intra-Service consultations, and consultations with another Federal agency) or the third parties are not considered small entities (consultations with the ADOT and the Tribes). Please refer to the Appendix A of the draft economic analysis of the proposed critical habitat designation for a more detailed discussion of potential economic impacts.

The Service's current understanding of recent case law is that Federal agencies are only required to evaluate the potential impacts of rulemaking on those entities directly regulated by the rulemaking; therefore, they are not required to evaluate the potential impacts to those entities not directly regulated by the designation of critical habitat. The designation of critical habitat for an endangered or threatened species only has a regulatory effect where a Federal action agency is involved in a particular action that may affect the designated critical habitat. Under these circumstances, only the Federal action agency is directly regulated by the designation, and, therefore, consistent with the Service's current interpretation of the RFA and recent case law, the Service may limit its evaluation of the potential impacts to those identified for Federal action agencies. Under this interpretation, there is no requirement under the RFA to evaluate the potential impacts to entities not directly regulated, such as small businesses. However, Executive Orders 12866 and 13563 direct Federal agencies to assess cost and benefits of available regulatory alternatives in quantitative (to the extent feasible) and qualitative terms. Consequently, it is the current practice of the Service to assess to the extent practicable these potential impacts, if sufficient data are available, whether or not this analysis is believed by the Service to be strictly required by the RFA. In other words, while the effects analysis required under the RFA is limited to entities directly regulated by the rulemaking, the effects analysis under the Act, consistent with the E.O. regulatory analysis requirements, can take into consideration impacts to both directly and indirectly impacted entities, where practicable and reasonable.

In summary, we have considered whether the proposed designation would result in a significant economic impact on a substantial number of small entities. Information for this analysis was gathered from the Small Business Administration, stakeholders, and the Service. We conclude that future consultations are not likely to involve a third party or the third parties are not considered small entities. For the above reasons and based on currently available information, we certify that, if promulgated, the proposed critical habitat designations would not have a significant economic impact on a substantial number of small business entities. Therefore, an initial regulatory flexibility analysis is not required.

Government-to-Government Relations With Native American Tribal Governments'' (59 FR 22951)

In accordance with the President's memorandum of April 29, 1994 (Government-to-Government Relations with Native American Tribal Governments; 59 FR 22951), Executive Order 13175 (Consultation and Coordination With Indian Tribal Governments), and the Department of the Interior's manual at 512 DM 2, we readily acknowledge our responsibility to communicate meaningfully with recognized Federal Tribes on a government-to-government basis. In accordance with Secretarial Order 3206 of June 5, 1997 (American Indian Tribal Rights, Federal-Tribal Trust Responsibilities, and the Endangered Species Act), we readily acknowledge our responsibilities to work directly with tribes in developing programs for healthy ecosystems, to acknowledge that Tribal lands are not subject to the same controls as Federal public lands, to remain sensitive to Indian culture, and to make information available to tribes.

Please see our statement under this required determination in our October 3, 2012, proposed rule (77 FR 60565–60566) for information regarding the Tribal lands included in the proposed critical habitat designation for the acuña cactus and Fickeisen plains cactus. Since the publication of that proposed rule, we sent the Chairmen of the Navajo and Tohono O'odham Nations letters of notification on October 31, 2012. In addition, we had a meeting with Tohono O'odham Nation staff in February 2013, to discuss the proposed designations.

Authors

The primary authors of this notice are the staff members of the Arizona

Ecological Services Field Office, Region 2, U.S. Fish and Wildlife Service.

Authority

The authority for this action is the Endangered Species Act of 1973, as amended (16 U.S.C. 1531 *et seq.*).

Dated: March 18, 2013.

Rachel Jacobson,

Principal Deputy Assistant Secretary for Fish and Wildlife and Parks.

[FR Doc. 2013–07159 Filed 3–27–13; 8:45 am]

BILLING CODE 4310–55–P

DEPARTMENT OF THE INTERIOR

Fish and Wildlife Service

50 CFR Part 17

[Docket No. FWS–R2–ES–2013–0018; 4500030113]

RIN 1018–AZ46

Endangered and Threatened Wildlife and Plants; Listing as Endangered and Designation of Critical Habitat for the Gierisch Mallow

AGENCY: Fish and Wildlife Service, Interior.

ACTION: Proposed rule; reopening of comment period.

SUMMARY: We, the U.S. Fish and Wildlife Service (Service), announce the reopening of the public comment period on the August 17, 2012, proposal to add the Gierisch mallow to the list of endangered species under the Endangered Species Act of 1973, as amended (Act). We also announce the reopening of comment on the August 17, 2012, proposal to designate critical habitat for the Gierisch mallow and the availability of a draft economic analysis and draft environmental assessment of the proposed critical habitat designation and amended required determinations for the proposed rule. We are reopening the comment period to allow all interested parties an opportunity to comment simultaneously on the proposals, the associated draft economic and environmental analyses, and the amended required determinations. Comments previously submitted need not be resubmitted, as they will be fully considered in preparation of the final rule.

DATES: *Written comments:* We will consider comments received or postmarked on or before April 29, 2013. Comments submitted electronically using the Federal eRulemaking Portal (see **ADDRESSES** section, below) must be received by 11:59 p.m. Eastern Time on the closing date.

ADDRESSES:

Document availability: You may obtain a copy of the proposed listing rule on the internet at *http://www.regulations.gov* at Docket No. FWS–R2–ES–2012–0049 or by mail from the Arizona Ecological Services Field Office (see **FOR FURTHER INFORMATION CONTACT**). You may obtain a copy of the proposed critical habitat rule and associated draft economic and environmental analyses at Docket No. FWS–R2–ES–2013–0018.

Written comments: You may submit written comments by one of the following methods:

(1) *Electronically:* Go to the Federal eRulemaking Portal: *http://www.regulations.gov.* Submit comments on the listing proposal to Docket No. FWS–R2–ES–2012–0049, and submit comments on the critical habitat proposal and associated draft analyses to Docket No. FWS–R2–ES–2013–0018. See **SUPPLEMENTARY INFORMATION** for an explanation of the two dockets.

(2) *By hard copy:* Submit comment on the listing proposal by U.S. mail or hand-delivery to: Public Comments Processing, Attn: FWS–R2–ES–2012–0049; Division of Policy and Directives Management; U.S. Fish and Wildlife Service; 4401 N. Fairfax Drive, MS 2042–PDM; Arlington, VA 22203. Submit comments on the critical habitat proposal and draft economic and environmental analyses by U.S. mail or hand-delivery to: Public Comments Processing, Attn: FWS–R2–ES–2013–0018; Division of Policy and Directives Management; U.S. Fish and Wildlife Service; 4401 N. Fairfax Drive, MS 2042–PDM; Arlington, VA 22203.

We request that you send comments only by the methods described above. We will post all comments on *http://www.regulations.gov.* This generally means that we will post any personal information you provide us (see the **PUBLIC COMMENTS** section below for more information).

FOR FURTHER INFORMATION CONTACT: Steve Spangle, Field Supervisor, Arizona Ecological Services Field Office, 2123 West Royal Palm Road, Suite 103, Phoenix, AZ 85021; by telephone (602)–242–0210; or by facsimile (602)–242–2513. Persons who use a telecommunications device for the deaf (TDD) may call the Federal Information Relay Service (FIRS) at 800–877–8339.

SUPPLEMENTARY INFORMATION:

Public Comments

We are reopening the comment period for our proposed listing determination and proposed critical habitat designation for *Sphaeralcea gierischii* (Gierisch mallow) that was published in the **Federal Register** on August 17, 2012 (77 FR 49894). We are specifically seeking comments on the draft economic and environmental analyses, which are now available, for the proposed critical habitat designation; see **ADDRESSES** for information on where to send your comments.

We are also notifying the public that we will publish two separate rules for the final listing determination and the final critical habitat determination for Gierisch mallow. The final listing rule will publish under the existing docket number, FWS–R2–ES–2012–0049, and the final critical habitat designation will publish under docket number FWS–R2–ES–2013–0018.

We request that you provide comments specifically on our listing determination under the existing docket number FWS–R2–ES–2012–0049. We will consider information and recommendations from all interested parties. We are particularly interested in comments concerning:

(1) Biological, commercial trade, or other relevant data concerning any threats (or lack thereof) to this species and regulations that may be addressing those threats.

(2) Additional information concerning the historical and current status, range, distribution, and population size of this species, including the locations of any additional populations of this species.

(3) Any information on the biological or ecological requirements of the species, and ongoing conservation measures for the species and its habitat.

(4) Current or planned activities in the areas occupied by the species and possible impacts of these activities on this species.

We request that you provide comments specifically on the critical habitat determination and draft economic and environmental analyses under docket number FWS–R2–ES–2013–0018. We will consider information and recommendations from all interested parties. We are particularly interested in comments concerning:

(5) The reasons why we should or should not designate land as ''critical habitat'' under section 4 of the Act (16 U.S.C. 1531 *et seq.*) including whether there are threats to the species from human activity, the degree of which can be expected to increase due to the designation, and whether that increase in threat outweighs the benefit of designation such that the designation of critical habitat may not be prudent.

(6) Specific information on:

(a) The amount and distribution of habitat for Gierisch mallow;

(b) What areas, that were occupied at the time of listing (or are currently occupied) and that contain features essential to the conservation of the species, should be included in the designation and why;

(c) Special management considerations or protection that may be needed in critical habitat areas we are proposing, including management for the potential effects of climate change; and

(d) What areas not occupied at the time of listing are essential for the conservation of the species and why.

(7) Land use designations and current or planned activities in the subject areas and their possible impacts on proposed critical habitat.

(8) Information on the projected and reasonably likely impacts of climate change on Gierisch mallow and proposed critical habitat.

(9) Any probable economic, national security, or other relevant impacts of designating any area that may be included in the final designation; in particular, we seek information on any impacts on small entities or families, and the benefits of including or excluding areas that exhibit these impacts.

(10) Information on the extent to which the description of economic impacts in the draft economic analysis is complete and accurate, and the description of the environmental impacts in the draft environmental analysis is complete and accurate.

(11) Whether any specific areas we are proposing for critical habitat designation should be considered for exclusion under section 4(b)(2) of the Act, and whether the benefits of potentially excluding any specific area outweigh the benefits of including that area under section 4(b)(2) of the Act.

(12) Whether we could improve or modify our approach to designating critical habitat in any way to provide for greater public participation and understanding, or to better accommodate public concerns and comments.

If you submitted comments or information on the proposed rule (77 FR 49894; August 17, 2012) during the initial comment period from August 17, 2012, to October 16, 2012, please do not resubmit them. We have incorporated them into the public record, and we will fully consider them in the preparation of our final rules. On the basis of public comments and other relevant information, we may, during the development of our final determination on the proposed critical habitat designation, find that areas proposed are not essential, are appropriate for exclusion under section 4(b)(2) of the Act, or are not appropriate for exclusion.

You may submit your comments and materials concerning the proposed rule or draft economic and environmental analyses by one of the methods listed in **ADDRESSES**. We request that you send comments only by the methods described in **ADDRESSES**.

If you submit a comment via *http://www.regulations.gov,* your entire comment—including any personal identifying information—will be posted on the Web site. We will post all hardcopy comments on *http://www.regulations.gov* as well. If you submit a hardcopy comment that includes personal identifying information, you may request at the top of your document that we withhold this information from public review. However, we cannot guarantee that we will be able to do so.

Comments and materials we receive, as well as supporting documentation we used, will be available for public inspection on *http://www.regulations.gov* at Docket No. FWS–R2–ES–2012–0049 (for the proposed listing) and Docket No. FWS–R2–ES–2013–0018 (for the proposed critical habitat designation, draft economic analysis, and draft environmental assessment), or by appointment, during normal business hours, at the U.S. Fish and Wildlife Service, Arizona Ecological Services Field Office (see **FOR FURTHER INFORMATION CONTACT**). You may obtain copies of the proposed rule on the Internet at *http://www.regulations.gov* at Docket Number FWS–R2–ES–2012–0049 and the draft economic and environmental analyses at Docket No. FWS–R2–ES–2013–0018, or by mail from the Arizona Ecological Services Field Office (see **FOR FURTHER INFORMATION CONTACT**).

Background

It is our intent to discuss only those topics directly relevant to the designation of critical habitat for Gierisch mallow in the remainder of this document. For more information on the species, the species' habitat, and previous Federal actions concerning the Gierisch mallow, refer to the proposed listing rule and designation of critical habitat, published in the **Federal Register** on August 17, 2012 (77 FR 49894). The proposed rule is available online at *http://www.regulations.gov* (at Docket Number FWS–R2–ES–2012–0049) or from the Arizona Ecological Services Field Office (see **FOR FURTHER INFORMATION CONTACT**).

Previous Federal Actions

On August 17, 2012, we published a proposed rule to list as endangered and to designate critical habitat for the Gierisch mallow (77 FR 49894). In total, we proposed approximately 5,189 hectares (ha) (12,822 acres (ac)) for designation as critical habitat in two units located in Mohave County, Arizona, and Washington County, Utah. That proposal had a 60-day comment period, ending October 16, 2012. We received a request for a public hearing; however, the request for the public hearing was withdrawn by the requestor on February 21, 2013. Therefore, we will not hold a public hearing. We will publish in the **Federal Register** a final listing determination and critical habitat designation for Gierisch mallow on or before August 17, 2013.

Critical Habitat

Section 3 of the Act defines critical habitat as the specific areas within the geographical area occupied by a species, at the time it is listed in accordance with the Act, on which are found those physical or biological features essential to the conservation of the species and that may require special management considerations or protection, and specific areas outside the geographical area occupied by a species at the time it is listed, upon a determination that such areas are essential for the conservation of the species. If the proposed critical habitat designation is made final, section 7 of the Act will prohibit destruction or adverse modification of critical habitat by any activity funded, authorized, or carried out by any Federal agency. Federal agencies proposing actions affecting critical habitat must consult with us on the effects of their proposed actions, under section 7(a)(2) of the Act.

Consideration of Impacts Under Section 4(b)(2) of the Act

Section 4(b)(2) of the Act requires that we designate or revise critical habitat based upon the best scientific data available, after taking into consideration the economic impact, impact on national security, or any other relevant impact of specifying any particular area as critical habitat. We may exclude an area from critical habitat if we determine that the benefits of excluding the area outweigh the benefits of including the area as critical habitat, provided such exclusion will not result in the extinction of the species.

When considering the benefits of inclusion for an area, we consider the

additional regulatory benefits that area would receive from the protection from adverse modification or destruction as a result of actions with a Federal nexus (activities conducted, funded, permitted, or authorized by Federal agencies), the educational benefits of mapping areas containing essential features that aid in the recovery of the listed species, and any benefits that may result from designation due to State or Federal laws that may apply to critical habitat.

When considering the benefits of exclusion, we consider, among other things, whether exclusion of a specific area is likely to result in conservation; the continuation, strengthening, or encouragement of partnerships; or implementation of a management plan. We have not proposed to exclude any areas from critical habitat. However, the final decision on whether to exclude any areas will be based on the best scientific data available at the time of the final designation, including information obtained during the comment period and information about the economic impact of designation. Accordingly, we have prepared a draft economic analysis concerning the proposed critical habitat designation, which is available for review and comment (see **ADDRESSES**).

Draft Economic Analysis

The draft economic analysis describes the economic impacts of all potential conservation efforts for the Gierisch mallow; some of these costs will likely be incurred regardless of whether we designate critical habitat. The economic impact of the proposed critical habitat designation is analyzed by comparing scenarios both ''with critical habitat'' and ''without critical habitat.'' The ''without critical habitat'' scenario represents the baseline for the analysis, considering protections already in place for the species (e.g., under the Federal listing and other Federal, State, and local regulations). The baseline, therefore, represents the costs incurred regardless of whether critical habitat is designated. The ''with critical habitat'' scenario describes the incremental impacts associated specifically with the designation of critical habitat for the species. The incremental conservation efforts and associated impacts are those not expected to occur absent the designation of critical habitat for the species.

Most courts have held that the Service only needs to consider the incremental impacts imposed by the critical habitat designation over and above those impacts imposed as a result of listing the species. For example, the Ninth Circuit Court of Appeals reached this conclusion twice within the last few years, and the U.S. Supreme Court declined to hear any further appeal from those rulings. *Arizona Cattle Growers' Assoc.* v. *Salazar,* 606 F.3d 116, (9th Cir. June 4, 2010) cert. denied, 179 L. Ed. 2d 300, 2011 U.S. LEXIS 1362, 79 U.S.L.W. 3475 (2011); *Home Builders Association of Northern California* v. *United States Fish & Wildlife Service,* 616 F. 3rd 983 (9th Cir. 2010) cert. denied, 179 L. Ed. 2d 300, 2011 U.S. LEXIS 1362, 79 U.S.L.W. 3475 (2011).

However, the prevailing court decisions in the Tenth Circuit Court of Appeals do not allow the incremental analysis approach. Instead, the Tenth Circuit requires that the Service consider both the baseline economic impacts imposed due to listing the species and the additional incremental economic impacts imposed by designating critical habitat. *New Mexico Cattle Growers Ass'n* v. *FWS,* 248 F.3d 1277 (10th Cir. May 11, 2001). As a consequence, an economic analysis for critical habitat that is being proposed for designation within States that fall within the jurisdiction of the Tenth Circuit (as this designation does) should include a coextensive cost evaluation which addresses, and quantifies to the extent feasible, all of the conservation-related impacts associated with the regulatory baseline (those resulting under the jeopardy standard under section 7 of the Act, and under sections 9 and 10 of the Act). In other words, the allocation of impacts should show those that are part of the regulatory baseline and those that are unique to the critical habitat designation.

Conservation measures implemented under the baseline (without critical habitat) scenario are described qualitatively within the draft economic analysis, but economic impacts associated with these measues are not quantified. Economic impacts are only quantified for conservation measures implemented specifically due to the designation of critical habitat (i.e., incremental impacts). For a further description of the methodology of the analysis, see Chapter 2, ''FRAMEWORK FOR THE ANALYSIS,'' of the draft economic analysis.

The draft economic analysis provides estimated costs of the foreseeable potential economic impacts of the proposed critical habitat designation for Gierisch mallow over the next 20 years, which was determined to be the appropriate period for analysis because limited planning information is available for most activities to forecast activity levels for projects beyond a 20-year timeframe. It identifies potential incremental costs as a result of the proposed critical habitat designation; these are those costs attributed to critical habitat over and above those baseline costs attributed to listing.

The draft economic analysis quantifies economic impacts of Gierisch mallow conservation efforts associated with the following categories of activity: (1) Gypsum mining; (2) livestock grazing; and (3) transportation projects. Chapter 4 of the draft economic analysis provides the quantification of economic impacts of Gierisch mallow conservation efforts.

We do not anticipate recommending incremental conservation measures to avoid adverse modification of critical habitat over and above those recommended to avoid jeopardy of the species, and, as such, the economic analysis forecasts few incremental economic impacts as a result of the designation of critical habitat for this species. A number of factors limit the extent to which the proposed critical habitat designation will result in incremental costs, including the fact that all proposed habitat is occupied by the species and the species' survival is closely linked to the quality of the habitat.

The total projected incremental costs of administrative efforts resulting from section 7 consultations on Gierisch mallow are approximately $51,000 over 20 years ($3,300 on an annualized basis), assuming a 7 percent discount rate. The analysis estimates potential future administrative impacts based on the historical rate of consultations on listed species in areas proposed for critical habitat, as discussed in Chapter 2 of the draft economic analysis.

As stated earlier, we are soliciting data and comments from the public on the draft economic analysis, as well as all aspects of the proposed rule and our amended required determinations. We may revise the proposed rule or supporting documents to incorporate or address information we receive during the public comment period. In particular, we may exclude an area from critical habitat if we determine that the benefits of excluding the area outweigh the benefits of including the area, provided the exclusion will not result in the extinction of this species.

Draft Environmental Assessment

The purpose of the draft environmental assessment, prepared pursuant to the National Environmental Policy Act (NEPA) (42 U.S.C. 4321 *et seq.*), is to identify and disclose the environmental consequences resulting from the proposed action of designating critical habitat for the Gierisch mallow.

In the draft environmental assessment, three alternatives are evaluated: Alternative A, the no action alternative; Alternative B, the proposed rule without exclusion areas; and Alternative C, the proposed rule with exclusion areas. The no action alternative is required by NEPA for comparison to the other alternatives analyzed in the draft environmental assessment. The no action alternative is equivalent to no designation of critical habitat for Gierisch mallow. Under Alternative B, critical habitat would be designated, as proposed, with no exclusions. Under Alternative C, critical habitat would be designated; however, the Black Rock Gypsum Mine and the Georgia-Pacific Gypsum Mine would be excluded from critical habitat designation. Our preliminary determination is that designation of critical habitat for Gierisch mallow will not have direct impacts on the environment. However, we will further evaluate this issue as we complete our final environmental assessment.

As we stated earlier, we are soliciting data and comments from the public on the draft environmental assessment, as well as all aspects of the proposed rule. We may revise the proposed rule or supporting documents to incorporate or address information we receive during the comment period on the environmental consequences resulting from our designation of critical habitat.

Required Determinations—Amended

In our August 17, 2012, proposed rule (77 FR 49894), we indicated that we would defer our determination of compliance with several statutes and executive orders until the information concerning potential economic impacts of the designation and potential effects on landowners and stakeholders became available in the draft economic analysis. We have now made use of the draft economic analysis data to make these determinations. In this document, we affirm the information in our proposed rule concerning Executive Orders (E.O.s) 12866 and 13563 (Regulatory Planning and Review), E.O. 12630 (Takings), E.O. 13132 (Federalism), E.O. 12988 (Civil Justice Reform), E.O. 13211 (Energy, Supply, Distribution, and Use), the Unfunded Mandates Reform Act (2 U.S.C. 1501 *et seq.*), the Paperwork Reduction Act of 1995 (44 U.S.C. 3501 *et seq.*), and the President's memorandum of April 29, 1994, ''Government-to-Government Relations with Native American Tribal Governments'' (59 FR 22951). However, based on the draft economic analysis data, we are amending our required determinations concerning the Regulatory Flexibility Act (5 U.S.C. 601 *et seq.*) and the National Environmental Policy Act (42 U.S.C. 4321 *et seq.*),

Regulatory Flexibility Act (5 U.S.C. 601 et seq.)

Under the Regulatory Flexibility Act (RFA; 5 U.S.C. 601 *et seq.*), as amended by the Small Business Regulatory Enforcement Fairness Act of 1996 (SBREFA; 5 U.S.C. 801 *et seq.*), whenever an agency is required to publish a notice of rulemaking for any proposed or final rule, it must prepare and make available for public comment a regulatory flexibility analysis that describes the effects of the rule on small entities (i.e., small businesses, small organizations, and small government jurisdictions). However, no regulatory flexibility analysis is required if the head of the agency certifies the rule will not have a significant economic impact on a substantial number of small entities. The SBREFA amended the RFA to require Federal agencies to provide a certification statement of the factual basis for certifying that the rule will not have a significant economic impact on a substantial number of small entities. Based on our draft economic analysis of the proposed designation, we provide our analysis for determining whether the proposed rule would result in a significant economic impact on a substantial number of small entities. Based on comments we receive, we may revise this determination as part of our final rulemaking.

According to the Small Business Administration, small entities include small organizations such as independent nonprofit organizations; small governmental jurisdictions, including school boards and city and town governments that serve fewer than 50,000 residents; and small businesses (13 CFR 121.201). Small businesses include manufacturing and mining concerns with fewer than 500 employees, wholesale trade entities with fewer than 100 employees, retail and service businesses with less than $5 million in annual sales, general and heavy construction businesses with less than $27.5 million in annual business, special trade contractors doing less than $11.5 million in annual business, and agricultural businesses with annual sales less than $750,000. To determine if potential economic impacts to these small entities are significant, we considered the types of activities that might trigger regulatory impacts under this designation as well as types of project modifications that may result. In general, the term ''significant economic impact'' is meant to apply to a typical small business firm's business operations.

To determine if the proposed designation of critical habitat for Gierisch mallow would affect a substantial number of small entities, we considered the number of small entities affected within particular types of economic activities, such as mining, livestock grazing, and transportation. In order to determine whether it is appropriate for our agency to certify that the proposed rule would not have a significant economic impact on a substantial number of small entities, we considered each industry or category individually. In estimating the numbers of small entities potentially affected, we also considered whether their activities have any Federal involvement. Critical habitat designation will not affect activities that do not have any Federal involvement; designation of critical habitat only affects activities conducted, funded, permitted, or authorized by Federal agencies. If we finalize the proposed listing for the species, in areas where the Gierisch mallow is present, Federal agencies will be required to consult with us under section 7 of the Act on activities they fund, permit, or implement that may affect the species. If we finalize this proposed critical habitat designation, consultations to avoid the destruction or adverse modification of critical habitat would be incorporated into the existing consultation process.

In the draft economic analysis, we evaluated the potential economic effects on small entities resulting from implementation of conservation actions related to the proposed designation of critical habitat for the Gierisch mallow. The designation of critical habitat for Gierisch mallow will not affect any small entities. Approximately 89 percent of land in the designation is federally owned. Anticipated incremental impacts in proposed critical habitat are primarily related to consultations on livestock management and mining activity. The forecast consultations either do not include third parties (programmatic consultations and consultations with another Federal agency) or the third parties are not considered small entities (consultations with the Arizona Department of Transportation and Western Mining Minerals Inc.). One of the gypsum mine operating companies, Western Mining Minerals, Inc., is a subsidiary of Saint-Gobain. The small business threshold for the NAICS code corresponding to gypsum mining (212399, All Other Nonmetallic Mineral Mining) is 500 employees. Saint-Gobain employs multiple thousands of people, and

therefore is not considered small. The other mining operation is owned by Georgia-Pacific; however, the company operates on Arizona State Land Department managed land where no Federal nexus exists, and all potential impacts resulting from mallow conservation are considered to be baseline impacts. The remaining forecast impacts are anticipated to be conducted for road and highway maintenance projects. Little to no impact to third parties is expected associated with these activities. For this reason, there would be little to no impacts to small entities as a result of critical habitat designation for Gierisch mallow. Please refer to Appendix A of the draft economic analysis of the proposed critical habitat designation for a more detailed discussion of potential economic impacts.

The Service's current understanding of recent case law is that Federal agencies are only required to evaluate the potential impacts of rulemaking on those entities directly regulated by the rulemaking; therefore, they are not required to evaluate the potential impacts to those entities not directly regulated. The designation of critical habitat for an endangered or threatened species only has a regulatory effect where a Federal action agency is involved in a particular action that may affect the designated critical habitat. Under these circumstances, only the Federal action agency is directly regulated by the designation, and, therefore, consistent with the Service's current interpretation of RFA and recent case law, the Service may limit its evaluation of the potential impacts to those identified for Federal action agencies. Under this interpretation, there is no requirement under the RFA to evaluate potential impacts to entities not directly regulated, such as small businesses. However, Executive Orders 12866 and 13563 direct Federal agencies to assess the costs and benefits of available regulatory alternatives in quantitative (to the extent feasible) and qualitative terms. Consequently, it is the current practice of the Service to assess to the extent practicable these potential impacts, if sufficient data are available, whether or not this analysis is believed by the Service to be strictly required by the RFA. In other words, while the effects analysis required under the RFA is limited to entities directly regulated by the rulemaking, the effects analysis under the Act, consistent with the E.O. regulatory analysis requirements, can take into consideration impacts to both directly and indirectly impacted entities, where practicable and reasonable.

In summary, we have considered whether the proposed designation would result in a significant economic impact on a substantial number of small entities. Information for this analysis was gathered from the Small Business Administration, stakeholders, and the Service. We conclude that future consultations are unlikely to involve a third party. For the above reasons and based on currently available information, we certify that, if promulgated, the proposed critical habitat designation would not have a significant economic impact on a substantial number of small business entities. Therefore, an initial regulatory flexibility analysis is not required.

National Environmental Policy Act (42 U.S.C. 4321 et seq.)

It is our position that, outside the jurisdiction of the U.S. Court of Appeals for the Tenth Circuit, we do not need to prepare environmental analyses as defined by NEPA (42 U.S.C. 4321 *et seq.*) in connection with designating critical habitat under the Act. We published a notice outlining our reasons for this determination in the **Federal Register** on October 25, 1983 (48 FR 49244). This position was upheld by the U.S. Court of Appeals for the Ninth Circuit (*Douglas County* v. *Babbitt,* 48 F.3d 1495 (9th Cir. 1995), cert. denied 516 U.S. 1042 (1996)). However, when the range of the species includes States within the Tenth Circuit, such as that of the Gieirsch mallow, under the Tenth Circuit ruling in *Catron County Board of Commissioners* v. *U.S. Fish and Wildlife Service,* 75 F.3d 1429 (10th Cir. 1996), we will undertake a NEPA analysis for critical habitat designation. In accordance with the Tenth Circuit, we have completed a draft environmental assessment to identify and disclose the environmental consequences resulting from the proposed designation of critical habitat for the Gieirsch mallow. Our preliminary determination is that the designation of critical habitat for the Gieirsch mallow would not have direct impacts on the environment. However, we will further evaluate this issue as we complete our final environmental assessment.

Authors

The primary authors of this notice are the staff members of the Arizona Ecological Services Field Office, Southwest Region, U.S. Fish and Wildlife Service.

Authority

The authority for this action is the Endangered Species Act of 1973, as amended (16 U.S.C. 1531 *et seq.*).

Dated: March 18, 2013.

Rachel Jacobson,

Principal Deputy Assistant Secretary for Fish and Wildlife and Parks.

[FR Doc. 2013–07122 Filed 3–27–13; 8:45 am]

BILLING CODE 4310–55–P

DEPARTMENT OF COMMERCE

National Oceanic and Atmospheric Administration

50 CFR Part 648

[Docket No. 120416018–3159–01]

RIN 0648–BC05

Fisheries of the Northeastern United States; Tilefish Fishery Management Plan; Regulatory Amendment, Corrections, and Clarifications

AGENCY: National Marine Fisheries Service (NMFS), National Oceanic and Atmospheric Administration (NOAA), Commerce.

ACTION: Proposed rule; request for comments.

SUMMARY: The Tilefish Individual Fishing Quota Program was implemented at the start of the 2010 fishing year (November 1, 2009). After 3 years of operation, it has become apparent that some of the implementing regulations need to be clarified, corrected, or modified to better reflect the intent of Tilefish Amendment 1 and clarify certain regulatory text that may cause confusion or otherwise appear inconsistent with the Magnuson-Stevens Fishery Conservation and Management Act (MSA). This action would make corrections, clarifications, and regulatory modifications to the regulations that implemented the Tilefish Individual Fishing Quota Program. These changes would not affect the fishing operation of any vessel.

DATES: Written comments must be received no later than 5 p.m. eastern standard time, on April 29, 2013.

ADDRESSES: You may submit comments on this document, identified by NOAA–NMFS–2012–0247, by any of the following methods:

- *Electronic Submission:* Submit all electronic public comments via the Federal e-Rulemaking Portal. Go to *www.regulations.gov/#!docketDetail;D=NOAA-NMFS-2012-0247,* click the ''Comment Now!'' icon,

complete the required fields, and enter or attach your comments.

• *Mail:* Submit written comments to John K. Bullard, Regional Administrator, NMFS, Northeast Regional Office, 55 Great Republic Drive, Gloucester, MA 01930. Mark the outside of the envelope: ''Comments on Tilefish Correction Proposed Rule.''

• *Fax:* (978) 281–9135, Attn: Douglas Potts.

Instructions: Comments sent by any other method, to any other address or individual, or received after the end of the comment period, may not be considered by NMFS. All comments received are a part of the public record and will generally be posted for public viewing on *www.regulations.gov* without change. All personal identifying information (e.g., name, address, etc.), confidential business information, or otherwise sensitive information submitted voluntarily by the sender will be publicly accessible. NMFS will accept anonymous comments (enter ''N/A'' in the required fields if you wish to remain anonymous). Attachments to electronic comments will be accepted in Microsoft Word, Excel, or Adobe PDF file formats only.

FOR FURTHER INFORMATION CONTACT: Douglas Potts, Fishery Policy Analyst, phone (978) 281–9341, fax (978) 281–9135.

SUPPLEMENTARY INFORMATION:

Background

On August 24, 2009, NMFS published a final rule (74 FR 42580) to implement provisions of Amendment 1 to the Tilefish Fishery Management Plan (FMP) (Tilefish Amendment 1). Tilefish Amendment 1 included a new structure for managing the commercial tilefish fishery using an individual fishing quota (IFQ) system. The new tilefish IFQ program became effective on November 1, 2009. After 3 years of operation, it has become apparent that some of the implementing regulations need to be clarified, corrected, or modified to better reflect the intent of Tilefish Amendment 1.

In most IFQ programs, there is a clear distinction between quota share (QS) and quota pounds (QP). QS is the percentage of the total annual allocation of fish to the IFQ program that is held by an allocation holder from year to year (e.g., 2 percent of the total allocation). QP refers to the quota, expressed in weight of fish, that is issued annually to each IFQ allocation permit holder based on the QS they hold and the total amount of fish allocated to the IFQ program (e.g., 2-percent QS × 1,000,000 lb (453,592 kg) = 20,000 lb (9,072 kg) QP). The current regulations regarding the tilefish IFQ program use the term ''allocation'' to refer to both QS and QP in the tilefish IFQ fishery. In some instances, this lack of distinction can cause confusion, particularly when discussing transfers of QS and QP. For example, QP transfers are temporary (i.e., a lease), effective for the duration of the current fishing year, while QS transfers are permanent and affect the calculation of QP that would be allocated to an IFQ allocation permit holder in the following fishing year. Accordingly, an IFQ allocation permit holder could potentially conduct either or both types of transfer in a given year, not necessarily to the same individuals. In order to clarify the difference between QS and QP, this rule would adopt, throughout the tilefish IFQ regulations, the terms ''IFQ quota share'' and ''annual IFQ allocation'' to refer to QS and QP, respectively, rather than using the term ''allocation'' to refer to both QS and QP.

The use of the term ''allocation'' to refer to both QS and QP also resulted in the current regulations referring to ''permanent allocation'' and allocation ''ownership,'' as another way to distinguish QS from QP. These terms could be confusing to the reader, because the MSA specifically states that harvest authorizations under a limited access privilege program (such as the tilefish IFQ program) do not create any right, title, or interest to or in any fish prior to harvest and may be revoked, limited, or modified at any time (16 U.S.C. 1853a(b)). Therefore, allocations are not permanent and are not ''owned'' by the allocation holder. This rule would modify language throughout the regulation that might appear to be inconsistent with the MSA by removing references to IFQ allocation being ''owned'' or ''permanent,'' and, where appropriate, would replace such references with references to these allocations being held by or allocated to tilefish IFQ allocation permit holders.

Tilefish Amendment 1 specifies that U.S. citizens, permanent resident aliens, or corporations eligible to own a U.S. Coast Guard documented vessel are eligible to hold a tilefish IFQ allocation permit for both QS and QP. However, the current regulatory language regarding who can hold a tilefish IFQ allocation permit only makes reference to the section of the U.S. Code pertaining to ownership of a U.S. Coast Guard documented vessel. Because permanent resident aliens cannot own a U.S. Coast Guard documented vessel, their ability to hold a tilefish IFQ allocation permit is not addressed by the current regulations. Therefore, this action would consolidate the number of cross references to the relevant section of the U.S. Code into a single cross reference in a new subparagraph at § 648.294(a)(3) and add language to specifically allow permanent resident aliens to hold a tilefish IFQ allocation permit. This action would also correct an error in the cross reference to the U.S. Code.

The regulations require vessel owners or operators in the tilefish IFQ program to report landings of tilefish within 48 hours of landing, through the Interactive Voice Response (IVR) system. This action would specify in § 648.7(b)(2)(ii) that such reports may be submitted through the IVR system, or through another system approved by the Regional Administrator. This would allow for the future development of an online reporting option that could be more convenient for the fishing industry and less prone to data entry errors.

When the tilefish IFQ system was first implemented, a deadline of September 1 was set for all transfers of both QS (permanent transfer) and QP (temporary transfer) allocations. The September 1 deadline was intended to allow time for NMFS to process any permanent transfers of QS before QP allocations needed to be issued prior to the start of the next fishing year on November 1. This action proposes to maintain the September 1 deadline for submitting an application for a QS transfer, but would revise § 648.294(e)(4) to allow a deadline of October 10 for a QP transfer. This additional time would allow IFQ allocation permit holders who exceed their available QP by a small amount near the end of the fishing year to lease more QP to cover the potential overage and avoid a deduction in their QP allocation the following year. It would also allow IFQ allocation permit holders who have more QP than they intend to harvest to gain some value by leasing it out. This additional time for transferring annual QP could lead to fuller and more efficient utilization of the available QP.

Section 304(d) of the MSA requires NMFS to recover the actual costs directly related to the management, data collection, and enforcement of any limited access privilege program. This action proposes regulatory changes to the process of determining and collecting IFQ cost recovery fees under the authority granted the Secretary in section 305(d) of the MSA. The Tilefish Amendment 1 document and the August 24, 2009, final rule were both written before the tilefish IFQ cost recovery fee year had been established and before the system for billing and collecting payments had been fully developed. Consequently, the

regulations do not fully reflect the current practices of the cost recovery system that developed after the initial stages of the IFQ cost recovery process. This action proposes regulatory changes to § 648.294(h) to reconcile the regulatory language with the intent of Tilefish Amendment 1 to ensure clear and efficient collection of the required cost-recovery fees, and the current cost recovery fee collection system. For example, the current regulations require the Regional Administrator to deny renewal of an IFQ allocation permit if the cost recovery fee is not paid by the initial due date. However, since the fee year that was established after the regulations were written does not align with the fishing year, permits are issued 3 months before cost recovery bills are calculated, making denial of permit renewal a potentially ineffective deterrent against non-payment. Therefore, the proposed action would authorize the Regional Administrator to suspend an IFQ allocation permit, prohibiting landing or leasing QP or transferring QS, if full payment of the cost recovery fee is not made by the initial due date, rather than waiting until the next fishing year to deny the renewal of the IFQ allocation permit. Under the current regulations, a fisherman may submit additional documentation to support a different fee amount, but it is not clear when or how such documents must be submitted, or if this represents a formal appeal of the fee amount. NMFS has provided more information about how to appeal an IFQ cost recovery fee as part of the annual IFQ cost recovery fee bill that is sent to IFQ allocation permit holders. The proposed changes would clarify in the regulation that an IFQ allocation permit holder may appeal the fee amount, and, if an appeal is made, the permit holder may request a letter of authorization to allow continued fishing for tilefish while the appeal is pending. These changes would bring the regulatory text in line with the intent of Tilefish Amendment 1 to ensure clear and efficient collection of the required cost-recovery fees and the current cost recovery fee system as described in the cost recovery bills, and provide greater detail on the consequences of failing to pay or appeal the fee before the due date, as well as the process by which an IFQ allocation permit holder could appeal the cost recovery fee. In addition, the action would reorganize § 648.294(h) to improve the section's clarity by using additional subparagraphs identified by headers to separate different aspects of the cost recovery fee collection process, including Payment Responsibility, IFQ Fee Determination, Fee Payment Procedure, Payment Compliance, Appeal of the IFQ Fee Amount, and Annual Cost Recovery Report.

The action also would correct a regulatory cross reference pertaining to the Research Set-Aside program through revisions to 648.292(e).

Classification

Pursuant to section 304(b)(1)(A) of the MSA, the Assistant Administrator for Fisheries, NOAA, has determined that this proposed rule is consistent with the Tilefish FMP, other provisions of the MSA, and other applicable law, subject to further consideration after public comment.

This proposed rule has been determined to be not significant for purposes of Executive Order 12866.

The Chief Counsel for Regulation of the Department of Commerce certified to the Chief Counsel for Advocacy of the Small Business Administration (SBA) that this proposed rule, if adopted, would not have a significant economic impact on a substantial number of small entities.

The factual basis for this certification is as follows:

The proposed measures would only affect vessels holding an active Federal open-access tilefish permit and fishing under the tilefish IFQ program. In 2011, there were 12 Federal open-access tilefish vessels that were authorized to land tilefish under the tilefish IFQ program. All of these vessels fall within the SBA's definition of a small business, because none of the vessels exceeds the $4 million gross revenue threshold for commercial harvesters. No other small entities that would be expected to be directly affected by this proposed rule have been identified.

The purpose of this action is to clarify, correct, and/or modify certain provisions of the tilefish IFQ program's implementing regulations to clarify potentially confusing regulatory language and to better reflect the intent of the Tilefish Amendment 1 and current practices under the tilefish IFQ program. Specifically, if implemented, this action would (1) clarify potentially confusing regulatory language regarding the difference between QS and QP or that such allocations are ''owned'' or ''permanent;'' (2) specify in the regulations that tilefish landings may be reported through the IVR system, or through another system approved by the Regional Administrator, to allow for the future development of an online reporting option; (3) correct cross references within the regulations pertaining to the Research Set-Aside Program; (4) revise regulatory language and cross references in the regulations to clarify that permanent resident aliens are allowed to hold a tilefish IFQ allocation permit, as specified in Tilefish Amendment 1; (5) modify the regulations to extend the deadline for QP transfers from September 1 to October 10 of each fishing year; and (6) modify the regulations governing the cost recovery fee collection system to reflect current fee collection practices and the intent of Tilefish Amendment 1 to ensure clear and efficient collection of the required cost-recovery fees.

Proposed changes (1) through (4) would make only minor, non-substantive changes to the regulations to clarify confusing regulatory language, provide for potential alternative tilefish landing reporting methods, and correct cross references in the regulations. These proposed changes would not change the operating practices in the fishery or cause a net change to fishing effort, participation in the fishery, or increases in fishery expenses. Thus, these proposed changes are not expected to have a significant (if any) economic impact on the tilefish IFQ allocation permit holders.

Proposed changes (5) and (6), which would make minor substantive changes to the regulations, are not expected to have a significant economic impact on the affected entities. The extended deadline for QP transfers until October 10 of each fishing year is not expected to significantly impact the amount of QP transferred nor the number of QP transfer requests. The intent of the modification is to allow IFQ allocation permit holders additional time to lease small amounts of QP to cover minor exceedances of their QP allocations prior to the beginning of the next fishing year on November 1. Likewise, the extended deadline for QP transfers would allow for similarly small gains in value by leasing surplus QP. For example, by the September 1 deadline in fishing year 2012, 7 of the 12 tilefish IFQ allocation permit holders requested a total of 5 QP transfers, in which 13 percent of the total allowable landings were transferred (254,379 lbs of the total allowable landings of 1,895,250 lbs). While the additional time for QP transfers could result in more transfer requests, the amount of QP that IFQ allocation permit holders have requested to transfer by September 1 in the past would not be expected to increase significantly by extending the deadline to October 10. Accordingly, extending the QP transfer deadline is not expected to cause a significant net change to fishing effort, participation in the fishery, or increases in fishery

expenses, and therefore is expected to have a minor economic impact on the tilefish IFQ allocation permit holders.

Similarly, the proposed changes to the cost recovery fee regulations in § 648.294(h) are not expected to have a significant economic impact on the affected entities. The action's proposed changes would allow the Regional Administrator to suspend an IFQ allocation permit during the current fishing year for failure to pay the cost recovery fee, rather than not renewing the permit for the following fishing year. The proposed changes also would provide greater detail on the consequences of failing to pay or appeal the fee before the due date, as well as clarify the right of and process for appealing the cost recovery fee. Under the appeals process, an IFQ allocation permit holder may request a letter of authorization to allow continued fishing for tilefish while an appeal is pending. Therefore, because an IFQ allocation permit holder may appeal the cost recovery fee and request such a letter to continue fishing during that appeal, the proposed change is not expected to have a significant impact on the affected entities. Furthermore, during the time the Tilefish IFQ Program has been in existence, the cost recovery fees have been significantly less than the maximum 3 percent fee allowed under the MSA (the cost recovery fee percentages for 2010 and 2011 were 0.424 percent and 0.3836 percent, respectively), and no IFQ allocation permit holder has failed to pay his/her cost recovery fee on time or appealed a fee amount. These proposed changes to the cost recovery fee regulations would reconcile the regulatory language with the intent of Tilefish Amendment 1 to ensure clear and efficient collection of the required cost-recovery fees, as well as with the current cost recovery fee collection system as communicated to IFQ allocation permit holders in the annual cost recovery bills. The action also would improve the clarity of § 648.294(h) by adding additional subparagraphs identified by headers to separate different aspects of the cost recovery fee collection system. All of these proposed changes to § 648.294(h) would provide greater clarity to the affected entities of the cost recovery fee system, but are not expected to cause a net change to fishing effort, participation in the fishery, or increases in fishery expenses. Thus the proposed changes are not expected to result in a significant economic impact on the IFQ allocation permit holders.

Therefore, because this action proposes to make minor corrections, clarifications, and modifications to the regulations, and because no significant net change in fishing effort, participation in the fishery, or fishery expenses is expected, this action will not have a significant economic effect on a substantial number of small entities. As a result, an initial regulatory flexibility analysis is not required and none has been prepared.

This proposed rule does not establish any new reporting, record-keeping, or other compliance requirements.

List of Subjects in 50 CFR Part 648

Fisheries, Fishing, Reporting and recordkeeping requirements.

Dated: March 22, 2013.

Alan D. Risenhoover,

Director, Office of Sustainable Fisheries, performing the functions and duties of the Deputy Assistant Administrator for Regulatory Programs, National Marine Fisheries Service.

For the reasons set out in the preamble, 50 CFR part 648 is proposed to be amended as follows:

PART 648—FISHERIES OF THE NORTHEASTERN UNITED STATES

■ 1. The authority citation for part 648 continues to read as follows:

Authority: 16 U.S.C. 1801 *et seq.*

■ 2. In § 648.2, the definitions of ''Interest in an IFQ allocation'' and ''Lessee'' are revised to read as follows:

§ 648.2 Definitions.

* * * * *

Interest in an IFQ allocation means: An allocation of quota share or annual IFQ allocation held by an individual; or by a company in which the individual is an owner, part owner, officer, shareholder, or partner; or by an immediate family member (an individual's parents, spouse, children, and siblings).

* * * * *

Lessee means:

(1) A vessel owner who receives temporarily transferred NE multispecies DAS from another vessel through the DAS Leasing Program specified at § 648.82(k); or

(2) A person or entity eligible to hold tilefish IFQ allocation, who receives temporarily transferred tilefish IFQ allocation, as specified at § 648.294(e)(1).

* * * * *

■ 3. In § 648.7, paragraph (b)(2)(ii) is revised to read as follows:

§ 648.7 Recordkeeping and reporting requirements.

* * * * *

(b) * * *

(2) * * *

(ii) *Tilefish vessel owners or operators.* The owner or operator of any vessel fishing under a tilefish IFQ allocation permit issued under this part, as described in § 648.294(a), must submit a tilefish catch report by using the IVR system, or other reporting system approved by the Regional Administrator, within 48 hours after returning to port and offloading. The report shall include at least the following information, and any other information required by the Regional Administrator: Vessel identification; trip during which tilefish are caught; pounds landed; VTR pre-printed serial number; and the Federal dealer number for the dealer who purchases the tilefish. This reporting requirement does not exempt the owner or operator from other applicable reporting requirements of this section.

* * * * *

■ 4. In § 648.292, paragraph (e) is revised to read as follows:

§ 648.292 Tilefish specifications.

* * * * *

(e) *Research quota.* See § 648.22(g).

■ 5. Section 648.294 is revised to read as follows:

§ 648.294 Individual fishing quota (IFQ) program.

(a) *IFQ allocation permits.* (1) After adjustments for incidental catch, research set-asides, and overages, as appropriate, pursuant to § 648.292(c), the Regional Administrator shall divide the remaining TAL among the IFQ quota share holders who held IFQ quota share as of September 1 of a given fishing year. Allocations shall be made by applying the IFQ quota share percentages that exist on September 1 of a given fishing year to the IFQ TAL pursuant to § 648.292(c), subject to any deductions for overages pursuant to paragraph (f) of this section. Amounts of IFQ allocation of 0.5 lb (0.23 kg) or smaller created by this calculation shall be rounded downward to the nearest whole number, and amounts of IFQ allocation greater than 0.5 lb (0.23 kg) shall be rounded upward to the nearest whole number, so that annual IFQ allocations are specified in whole pounds.

(2) Allocations shall be issued in the form of an annual IFQ allocation permit. The IFQ allocation permit shall specify the quota share percentage held by the IFQ allocation permit holder and the total pounds of tilefish that the IFQ allocation permit holder is authorized to harvest.

(3) In order to be eligible hold tilefish IFQ allocation, an individual must be a

U.S. citizen or permanent resident alien. Businesses or other entities that wish to hold allocation must be eligible to own a documented vessel under the terms of 46 U.S.C. 12103(b).

(b) *Application*—(1) *General.* Applicants for a permit under this section must submit a completed application on an appropriate form obtained from NMFS. The application must be filled out completely and signed by the applicant. Each application must include a declaration of all interests in IFQ quota shares and IFQ allocations, as defined in § 648.2, listed by IFQ allocation permit number, and must list all Federal vessel permit numbers for all vessels that an applicant owns or leases that would be authorized to possess tilefish pursuant to the IFQ allocation permit. The Regional Administrator will notify the applicant of any deficiency in the application.

(i) [Reserved]

(ii) *Renewal applications.* Applications to renew an IFQ allocation permit must be received by September 15 to be processed in time for the November 1 start of the next fishing year. Renewal applications received after this date may not be approved, and a new permit may not be issued before the start of the next fishing year. An IFQ allocation permit holder must renew his/her IFQ allocation permit on an annual basis by submitting an application for such permit prior to the end of the fishing year for which the permit is required. Failure to renew an IFQ allocation permit in any fishing year will result in any IFQ quota share held by that IFQ allocation permit holder to be considered abandoned and relinquished.

(2) *Issuance.* Except as provided in subpart D of 15 CFR part 904, and provided an application for such permit is submitted by September 15, as specified in paragraph (b)(1)(ii) of this section, NMFS shall issue annual IFQ allocation permits on or before October 31 to those who hold IFQ quota share as of September 1 of the current fishing year. From September 1 through October 31, permanent transfer of IFQ quota share is not permitted, as described in paragraph (e)(4) of this section.

(3) *Duration.* An annual IFQ allocation permit is valid until October 31 of each fishing year unless it is suspended, modified, or revoked pursuant to 15 CFR part 904; revised due to a transfer of all or part of the IFQ quota share or annual IFQ allocation under paragraph (e) of this section; or suspended for non-payment of the cost recovery fee as described in paragraph (h)(4) of this section.

(4) *IFQ Vessel.* All Federal vessel permit numbers that are listed on the IFQ allocation permit are authorized to possess tilefish pursuant to the IFQ allocation permit until the end of the fishing year or until NMFS receives written notification from the IFQ allocation permit holder that the vessel is no longer authorized to possess tilefish pursuant to the subject permit. An IFQ allocation permit holder who wishes to authorize an additional vessel(s) to possess tilefish pursuant to the IFQ allocation permit must send written notification to NMFS. This notification must include the vessel name and permit number, and the dates on which the IFQ allocation permit holder desires the vessel to be authorized to land tilefish pursuant to the IFQ allocation permit. A copy of the IFQ allocation permit must be carried on board each vessel so authorized to possess IFQ tilefish.

(5) *Alteration.* An annual IFQ allocation permit that is altered, erased, or mutilated is invalid.

(6) *Replacement.* The Regional Administrator may issue a replacement permit upon written application of the annual IFQ allocation permit holder.

(7) *Transfer.* The annual IFQ allocation permit is valid only for the person to whom it is issued. All or part of the IFQ quota share or the annual IFQ allocation specified in the IFQ allocation permit may be transferred in accordance with paragraph (e) of this section.

(8) *Abandonment or voluntary relinquishment.* Any IFQ allocation permit that is voluntarily relinquished to the Regional Administrator, or deemed to have been voluntarily relinquished for failure to pay a recoverable cost fee, in accordance with the requirements specified in paragraph (h)(2) of this section, or for failure to renew in accordance with paragraph (b)(1)(ii) of this section, shall not be reissued or renewed in a subsequent year.

(c)–(d) [Reserved]

(e) *Transferring IFQ allocations*—(1) *Temporary transfers.* Unless otherwise restricted by the provisions in paragraph (e)(3) of this section, the initial holder of an annual IFQ allocation may transfer the entire annual IFQ allocation, or a portion of the annual IFQ allocation, to any person or entity eligible to hold tilefish IFQ allocation under paragraph (a)(3) of this section. Annual IFQ allocation transfers shall be effective only for the fishing year in which the transfer is requested and processed, unless the applicant specifically requests that the transfer be processed for the subsequent fishing year. The Regional Administrator has final approval authority for all annual IFQ allocation transfer requests. The approval of a temporary transfer may be rescinded if the Regional Administrator finds that an emergency has rendered the lessee unable to fish for the transferred annual IFQ allocation, but only if none of the transferred allocation has been landed.

(2) *Permanent transfers.* Unless otherwise restricted by the provisions in paragraph (e)(3) of this section, and subject to final approval by the Regional Administrator, a holder of IFQ quota share may permanently transfer the entire IFQ quota share allocation, or a portion of the IFQ quota share allocation, to any person or entity eligible to hold tilefish IFQ allocation under paragraph (a)(3) of this section.

(3) *IFQ allocation transfer restrictions.* (i) If annual IFQ allocation is temporarily transferred to any eligible person or entity, it may not be transferred again within the same fishing year, unless the transfer is rescinded due to an emergency, as described in paragraph (e)(1) of this section.

(ii) A transfer of IFQ allocation or quota share will not be approved by the Regional Administrator if it would result in an entity holding, or having an interest in, a percentage of IFQ allocation exceeding 49 percent of the total tilefish adjusted TAL.

(iii) For the purpose of calculating the appropriate IFQ cost recovery fee, if the holder of an IFQ allocation leases additional IFQ allocation, the quantity and value of landings made after the date the lease is approved by the Regional Administrator are attributed to the transferred quota before being attributed to the allocation holder's base IFQ allocation, if any exists. In the event of multiple leases, landings would be attributed to the leased allocations in the order the leases were approved by the Regional Administrator. As described in paragraph (h) of this section, a tilefish IFQ quota share allocation holder shall incur a cost recovery fee, based on the value of landings of tilefish authorized under the allocation holder's annual tilefish IFQ allocation, including allocation that is leased to another IFQ allocation permit holder.

(4) *Application for an IFQ allocation transfer.* Any IFQ allocation permit holder applying for either permanent transfer of IFQ quota share or temporary transfer of annual IFQ allocation must submit a completed IFQ Allocation Transfer Form, available from NMFS. The IFQ Allocation Transfer Form must be submitted to the NMFS Northeast

Regional Office at least 30 days before the date on which the applicant desires to have the IFQ allocation transfer effective. The Regional Administrator shall notify the applicants of any deficiency in the application pursuant to this section. Applications for permanent IFQ quota share allocation transfers must be received by September 1 to be processed for the current fishing year. Applications for annual IFQ allocation transfers must be received by October 10 to be processed for the current fishing year.

(i) *Application information requirements.* An application to transfer IFQ allocation must include the following information: The type of transfer (either temporary or permanent); the signature of both parties involved; the price paid for the transfer; a declaration of the recipient's eligibility to receive IFQ allocation; the amount of allocation or quota share to be transferred; and a declaration, by IFQ allocation permit number, of all the IFQ allocations in which the person or entity receiving the IFQ allocation has an interest. The person or entity receiving the IFQ allocation must indicate the permit numbers of all federally permitted vessels that will possess or land the IFQ allocation. Information obtained from the IFQ Allocation Transfer Form is confidential pursuant to 16 U.S.C. 1881a.

(ii) *Approval of IFQ transfer applications.* Unless an application to transfer IFQ catch share and/or IFQ allocation is denied according to paragraph (e)(4)(iii) of this section, the Regional Administrator shall issue confirmation of application approval in the form of a new or updated IFQ allocation permit to the parties involved in the transfer within 30 days of receipt of a completed application.

(iii) *Denial of transfer application.* The Regional Administrator may reject an application to transfer IFQ catch share or IFQ allocation for the following reasons: The application is incomplete; the transferor does not possess a valid tilefish IFQ allocation permit; the transferor's or transferee's vessel or tilefish IFQ allocation permit has been sanctioned, pursuant to an enforcement proceeding under 15 CFR part 904; the transfer would result in the transferee having a tilefish IFQ allocation or holding IFQ quota share that exceeds 49 percent of the adjusted TAL allocated to IFQ allocation permit holders; the transfer is to a person or entity that is not eligible to hold tilefish IFQ allocation under paragraph (a)(3) of this section; the transferor or transferee is delinquent in payment of an IFQ cost recovery fee as described in paragraph (h)(4) of this section; or any other failure to meet the requirements of this subpart. Upon denial of an application to transfer IFQ allocation, the Regional Administrator shall send a letter to the applicant describing the reason(s) for the denial. The decision by the Regional Administrator is the final decision of the Department of Commerce; there is no opportunity for an administrative appeal.

(f) *IFQ allocation overages.* If an IFQ allocation is exceeded, including by amounts of tilefish landed by a lessee in excess of a temporary transfer of IFQ allocation, the amount of the overage will be deducted from the IFQ shareholder's allocation in the subsequent fishing year(s). If an IFQ allocation overage is not deducted from the appropriate allocation before the IFQ allocation permit is issued for the subsequent fishing year, a revised IFQ allocation permit reflecting the deduction of the overage shall be issued by NMFS. If the allocation cannot be reduced in the subsequent fishing year because the full allocation has already been landed or transferred, the IFQ allocation permit will indicate a reduced allocation for the amount of the overage in the next fishing year.

(g) *IFQ allocation acquisition restriction.* No person or entity may acquire more than 49 percent of the annual adjusted tilefish TAL, specified pursuant to § 648.294, at any point during a fishing year. For purposes of this paragraph, acquisition includes any permanent transfer of IFQ quota share or temporary transfer of annual IFQ allocation. The calculation of IFQ allocation for purposes of the restriction on acquisition includes IFQ allocation interests held by: A company in which the IFQ holder is a shareholder, officer, or partner; an immediate family member; or a company in which the IFQ holder is a part owner or partner.

(h) *IFQ cost recovery.* As required under section 304(d)(2)(A)(i) of the Magnuson-Stevens Act, the Regional Administrator shall collect a fee to recover the actual costs directly related to the management, data collection and analysis, and enforcement of the tilefish IFQ program.

(1) *Payment responsibility.* Each tilefish IFQ allocation permit holder with quota share shall incur a cost recovery fee annually, based on the value of landings of tilefish authorized under his/her tilefish IFQ allocation, including allocation that he/she leases to another IFQ allocation permit holder. The tilefish IFQ allocation permit holder is responsible for paying the fee assessed by NMFS.

(2) *IFQ fee determination.* The tilefish IFQ cost recovery billing period runs annually from January 1 through December 31.

(i) *Determination of total recoverable costs.* The Regional Administrator shall determine the actual costs directly associated with the management, data collection and analysis, and enforcement of the tilefish IFQ program incurred by NMFS during the cost recovery billing period.

(ii) *Calculating fee percentage.* The recoverable costs determined by the Regional Administrator will be divided by the total ex-vessel value of all tilefish IFQ landings during the cost recovery billing period to derive a fee percentage. Each IFQ allocation permit holder with quota share will be assessed a fee based on the fee percentage multiplied by the total ex-vessel value of all landings under his/her IFQ allocation permit, including landings of allocation that was leased to another IFQ allocation permit holder.

(A) The ex-vessel value for each pound of tilefish landed by an IFQ allocation permit holder shall be determined from Northeast Federal dealer reports submitted to NMFS, which include the price per pound paid to the vessel at the time of dealer purchase.

(B) The cost recovery fee percentage shall not exceed 3 percent of the total value of tilefish landings, as required under section 304(d)(2)(B) of the Magnuson-Stevens Act.

(3) *Fee payment procedure.* NMFS will create an annual IFQ allocation bill for each cost recovery billing period and provide it to IFQ allocation permit holder with quota share. The bill will include information regarding the amount and value of IFQ allocation landed during the prior cost recovery billing period, and the associated cost recovery fees.

(i) *Payment due date.* An IFQ allocation permit holder who has incurred a cost recovery fee must pay the fee to NMFS within 45 days of the date of the bill.

(ii) *Payment submission method.* Cost recovery payments shall be made electronically via the Federal Web portal, www.pay.gov, or other Internet sites designated by the Regional Administrator. Instructions for electronic payment shall be available on both the payment Web site and the cost recovery fee bill. Electronic payment options shall include payment via a credit card, as specified in the cost recovery bill, or via direct automated clearing house (ACH) withdrawal from a designated checking account. Alternatively, payment by check may be

authorized by Regional Administrator if he/she determines that electronic payment is not practicable.

(4) *Payment compliance.* If an IFQ allocation permit holder does not submit full payment by the due date described in paragraph (h)(3)(i) of this section, the Regional Administrator may:

(i) At any time thereafter, notify the IFQ allocation permit holder in writing that his/her IFQ allocation permit is suspended, thereby prohibiting landings of tilefish above the incidental limit, as specified at § 648.295.

(ii) Disapprove any transfer of annual tilefish allocation or quota share to or from the IFQ allocation permit holder as described in paragraph (e)(4)(iii) of this section, until such time as the amount due is paid.

(iii) Deny renewal of the IFQ allocation permit if it had not yet been issued for the current year, or deny renewal of the IFQ allocation permit for the following year.

(iv) If the fee amount is not appealed, the Regional Administrator may issue a Final Administrative Determination (FAD) as described in paragraph (h)(5) of this section, based upon available information.

(5) *Appeal of IFQ fee amount.* If a tilefish IFQ allocation permit holder disagrees with the fee amount determined by NMFS, he/she may appeal the cost recovery bill.

(i) IFQ fee appeals must be submitted to NMFS in writing before the due date described in paragraph (h)(3)(i) of this section.

(ii) The IFQ allocation permit holder shall have the burden of demonstrating that the fee amount calculated by NMFS is incorrect and what the correct amount is.

(iii) If a request to appeal is submitted on time, the Regional Administrator shall notify the IFQ allocation permit holder in writing, acknowledging the appeal and providing 30 days to submit any additional relevant documentation supporting an alternative fee amount.

(iv) While the IFQ fee is under appeal and the tilefish IFQ allocation permit is suspended, as described in paragraph (h)(4) of this section, the IFQ allocation permit holder may request a Letter of Authorization to fish until the appeal is concluded. Any tilefish landed pursuant to the above authorization will count against the IFQ allocation permit, if issued.

(v) *Final Administrative Determination (FAD).* Based on a review of available information, including any documentation submitted by the IFQ allocation permit holder in support of the appropriateness of a different fee amount, the Regional Administrator shall determine whether there is a reasonable basis upon which to conclude that an alternate fee amount is correct. This determination shall be in set forth in a FAD that is signed by the Regional Administrator. A FAD shall be the final decision of the Department of Commerce.

(A) The IFQ allocation permit holder shall have 30 days from the date of the FAD to comply with the terms of the FAD.

(B) If the IFQ allocation permit holder does not comply with the terms of the FAD within this period, the Regional Administrator shall:

(*1*) Refer the matter to the appropriate authorities within the U.S. Department of the Treasury for purposes of collection; and

(*2*) Cancel any Letter of Authorization to fish that had been issued during the appeal.

(vi) If NMFS does not receive full payment of an IFQ cost recovery fee prior to the end of the cost recovery billing period immediately following the one for which the fee was incurred, the subject IFQ allocation permit and any associated IFQ quota share shall be deemed to have been voluntarily relinquished pursuant to paragraph (b)(8) of this section.

(6) *Annual cost recovery report.* NMFS will publish annually a report on the status of the tilefish IFQ cost recovery program. The report will provide details of the costs incurred by NMFS for the management, enforcement, and data collection and analysis associated with the tilefish IFQ program during the prior cost recovery billing period, and other relevant information at the discretion of the Regional Administrator.

(i) *Periodic review of the IFQ program.* A formal review of the IFQ program must be conducted by the MAFMC within 5 years of the effective date of the final regulations. Thereafter, it shall be incorporated into every scheduled MAFMC review of the FMP (*i.e.,* future amendments or frameworks), but no less frequently than every 7 years.

[FR Doc. 2013–07161 Filed 3–27–13; 8:45 am]

BILLING CODE 3510–22–P

Notices

Federal Register

Vol. 78, No. 60

Thursday, March 28, 2013

This section of the FEDERAL REGISTER contains documents other than rules or proposed rules that are applicable to the public. Notices of hearings and investigations, committee meetings, agency decisions and rulings, delegations of authority, filing of petitions and applications and agency statements of organization and functions are examples of documents appearing in this section.

DEPARTMENT OF COMMERCE

Office of the Secretary

National Institute of Standards and Technology

National Telecommunications and Information Administration

[Docket Number 130206115–3115–01]

Incentives To Adopt Improved Cybersecurity Practices

AGENCY: U.S. Department of Commerce.

ACTION: Notice of inquiry.

SUMMARY: The President has directed the Secretary of Commerce to evaluate a set of incentives designed to promote participation in a voluntary program to be established by the Secretary of Homeland Security to support the adoption by owners and operators of critical infrastructure and other interested entities of the Cybersecurity Framework being developed by the National Institute of Standards and Technology (NIST). The evaluation will include analysis of the benefits and relative effectiveness of such incentives, and whether the incentives would require legislation or can be provided under existing law and authorities to participants in the Program. The Department of Commerce (Department) will use input received in response to this Notice to inform its recommendations, which will focus on incentives for critical infrastructure owners. In addition, the Department may use this input to develop a broader set of recommendations that apply to U.S. industry as a whole.

DATES: Comments are due on or before April 29, 2013.

ADDRESSES: Written comments may be submitted by mail to the Office of Policy Analysis and Development, National Telecommunications and Information Administration, U.S. Department of Commerce, 1401 Constitution Avenue NW., Room 4725, Washington, DC 20230. Comments may be submitted electronically to *cyberincentives@ntia.doc.gov.* All email messages and comments received are a part of the public record and will be made available to the public generally without change on the Internet Policy Task Force Web page at *http://www.ntia.doc.gov/category/cybersecurity.* For this reason, comments should not include confidential, proprietary, or business sensitive information.

FOR FURTHER INFORMATION CONTACT: For questions about this Notice, contact: Alfred Lee, Office of Policy Analysis and Development, National Telecommunications and Information Administration, U.S. Department of Commerce, 1401 Constitution Avenue NW., Room 4725, Washington, DC 20230, telephone (202) 482–1880; or send an email to *cyberincentives@ntia.doc.gov.* Please direct media inquiries to the Office of Public Affairs at (202) 482–4883; or send an email to *publicaffairs@doc.gov.*

SUPPLEMENTARY INFORMATION: The national and economic security of the United States depends on the reliable functioning of the Nation's critical infrastructure. The cyber threat to critical infrastructure is growing and represents one of the most serious national security challenges that the United States must confront. On February 12, 2013, the President signed Executive Order 13636, ''Improving Critical Infrastructure Cybersecurity.'' [1] As the President stated in the Executive Order, ''repeated cyber intrusions into America's critical infrastructure demonstrate a need for improved cybersecurity.'' [2]

The Executive Order establishes a policy of enhancing the security and resilience of the Nation's critical infrastructure and maintaining a cyber environment that encourages efficiency, innovation, and economic prosperity while promoting safety, security, business confidentiality, privacy and civil liberties through a partnership with the owners and operators of critical infrastructure [3] to improve cybersecurity information sharing and collaboratively develop and implement risk-based standards. The Executive Order sets forth three elements to establish this partnership. First, the Department of Homeland Security (''DHS'') will use a risk-based approach to identify critical infrastructure where a cybersecurity incident could reasonably result in catastrophic regional or national effects on public health or safety, economic security, or national security. Second, the National Institute of Standards and Technology will develop a framework consisting of a set of standards, methodologies, procedures, and processes that align policy, business, and technological approaches to address cyber risks (''the Framework''), which will provide a prioritized, flexible, repeatable, performance-based, and cost-effective approach, including information security measures and controls, to help owners and operators of critical infrastructure indentify, assess, and manage cyber risk. Third, DHS, in coordination with sector-specific agencies, will develop the Critical Infrastructure Cybersecurity Program (''the Program'') to promote voluntary adoption of the Framework.

The Executive Order recognizes that further incentives may be necessary to encourage sufficient private sector participation in the Program. To develop a clearer picture of existing and potential incentives, the Executive Order directs the Department of Commerce to recommend ways to promote participation in the Program.[4] The recommendations ''shall include analysis of the benefits and relative effectiveness of such incentives, and whether the incentives would require legislation or can be provided under existing law and authorities to participants of the Program.'' Consistent

[1] ''Exec. Order No. 13636, 78 FR 11739 (Feb. 19, 2013), available at: *https://www.federalregister.gov/articles/2013/02/19/2013-03915/improving-critical-infrastructure-cybersecurity.*

[2] *Id.*

[3] For the purposes of this Notice, the term ''critical infrastructure'' has the meaning given the term in 42 U.S.C. § 5195c(e): ''systems and assets, whether physical or virtual, so vital to the United States that the incapacity or destruction of such systems and assets would have a debilitating impact on security, national economic security, national public health or safety, or any combination of those matters.''

[4] The Executive Order also directs the Secretaries of the Treasury and Homeland Security to recommend incentives to participate in the Program. The Secretary of Defense and the Administrator of General Services are also tasked with reporting on government procurement-related issues.

with the Executive Order, these incentives may include technical and public policy measures that improve cybersecurity without creating barriers to innovation, economic growth, and the free flow of information. The Department of Commerce will submit its recommendations to the President through the Assistant to the President for Homeland Security and Counterterrorism and the Assistant to the President for Economic Affairs no later than June 12, 2013.

Improving cybersecurity practices among entities that do not own or operate critical infrastructure, or for other reasons are unlikely to join the Program, is also an important Executive Branch priority. Therefore, the Department of Commerce also seeks comment on a broader set of incentives that could help to promote the adoption of proven efforts to address cybersecurity vulnerabilities.

The Department of Commerce asked questions related to incentives for noncritical infrastructure in a July 2010 Notice of Inquiry.[5] Responses to the July 2010 Notice aided the Department's efforts to promote standards and best practices and informed its June 2011 ''Green Paper,'' *Cybersecurity, Innovation and the Internet Economy*.[6] Along with the responses to this Notice, the Department plans to draw again on earlier responses in the development of recommendations to the President on incentives. In addition, the Department plans to use responsive comments to inform a follow-up to the Green Paper.

Stakeholders that responded to the July 2010 Notice may wish to focus on the following questions:

- Have your viewpoints on any questions related to incentives for noncritical infrastructure changed since you filed them in response to the July 2010 Notice?
- Do your comments related to incentives for noncritical infrastructure also apply equally to critical infrastructure?
- Does anything in the Executive Order or recent legislative proposals change your views on what incentives will be necessary or how they can be achieved? In particular, would the incentives that you previously discussed be effective in encouraging all firms that participate in the Internet economy to participate in the Program? Would these incentives encourage critical infrastructure companies to join the Program?

In answering these questions, commenters should not limit their responses to incentives that are feasible under existing law.

For all stakeholders, particularly those that did not respond to these earlier inquiries, the Department of Commerce requests comments on any of the following questions:

- Are existing incentives adequate to address the current risk environment for your sector/company?
- Do particular business sectors or company types lack sufficient incentives to make cybersecurity investments more than others? If so, why?
- How do businesses/your business assess the costs and benefits of enhancing their cybersecurity?
- What are the best ways to encourage businesses to make investments in cybersecurity that are appropriate for the risks that they face?
- How do businesses measure success and the cost-effectiveness of their current cybersecurity programs?
- Are there public policies or private sector initiatives in the United States or other countries that have successfully increased incentives to make security investments or other investments that can be applied to security?
- Are there disincentives or barriers that inhibit cybersecurity investments by firms? Are there specific investment challenges encountered by small businesses and/or multinational companies, respectively? If so, what are the disincentives, barriers or challenges and what should be done to eliminate them?
- Are incentives different for small businesses? If so, how?
- For American businesses that are already subject to cybersecurity requirements, what is the cost of compliance and is it burdensome relative to other costs of doing business?
- What are the merits of providing legal safe-harbors to individuals and commercial entities that participate in the DHS Program? By contrast, what would be the merits or implications of incentives that hold entities accountable for failure to exercise reasonable care that results in a loss due to inadequate security measures?
- What would be the impact of requiring entities to join the DHS Program prior to receiving government financial guarantees or assistance in relevant sectors?
- How can liability structures and insurance, respectively, be used as incentives?
- What other market tools are available to encourage cybersecurity best practices?
- Should efforts be taken to better promote and/or support the adoption of the Framework or specific standards, practices, and guidelines beyond the DHS Program? If so, what efforts would be effective?
- In what way should these standards, practices, and guidelines be promoted to small businesses and multinationals, respectively, and through what mechanisms? How can they be promoted and adapted for multinational companies in various jurisdictions?
- What incentives are there to ensure that best practices and standards, once adopted, are updated in the light of changing threats and new business models?
- Voluntary industry sector governance mechanisms are sometimes used to stimulate organizations to conform to a set of principles, guidelines, and operations based on best practices, standards, and conformity assessment processes that collectively increase the level of assurance while preserving organizations' brand standing and the integrity of products and services.
  - ○ Do organizations participate in voluntary governance mechanisms?
  - ○ Which industries/groups have voluntary governance mechanisms?
  - ○ Do existing voluntary governance mechanisms have cybersecurity-related constraints?
  - ○ What are the benefits and challenges associated with voluntary governance mechanisms?

Dated: March 22, 2013.

Rebecca M. Blank,

Deputy Secretary of Commerce.

Patrick Gallagher,

Under Secretary of Commerce for Standards and Technology.

Lawrence E. Strickling,

Assistant Secretary for Communications and Information.

[FR Doc. 2013–07234 Filed 3–27–13; 8:45 am]

BILLING CODE 3510–EA–P

[5] Dept. of Commerce, Cybersecurity, Innovation, and the Internet Economy, 75 FR 44216 (July 28, 2010) (Notice of Inquiry), *available at http://www.ntia.doc.gov/frnotices/2010/FR_CybersecurityNOI_07282010.pdf*. Comments received in response to the 2010 Notice of Inquiry are available at *http://www.nist.gov/itl/cybercomments.cfm*.

[6] Dept. of Commerce, *Cybersecurity, Innovation, and the Internet Economy* (June 2011), *http://www.nist.gov/itl/upload/Cybersecurity_Green-Paper_FinalVersion.pdf*. The questions asked in the Green Paper are available at Dept. of Commerce, Cybersecurity, Innovation, and the Internet Economy, 76 FR 34965 (June 15, 2011), *available at http://www.ntia.doc.gov/federal-register-notice/2011/cybersecurity-innovation-and-internet-economy*. Comments received in response to the Green Paper are available at *http://www.nist.gov/itl/greenpapercomments.cfm*.

DEPARTMENT OF COMMERCE

International Trade Administration

[A–570–908]

Sodium Hexametaphosphate from the People's Republic of China: Final Results of Antidumping Duty Administrative Review; 2011–2012

AGENCY: Import Administration, International Trade Administration, Department of Commerce.

SUMMARY: On December 7, 2012, the Department of Commerce (the ''Department'') published the *Preliminary Results* of the third administrative review of sodium hexametaphosphate from the People's Republic of China (''PRC'').[1] We gave interested parties an opportunity to comment on the *Preliminary Results.* No party commented on the *Preliminary Results.*

DATES: *Effective Date:* March 28, 2013.

FOR FURTHER INFORMATION CONTACT: Paul Walker, AD/CVD Operations, Office 9, Import Administration, International Trade Administration, U.S. Department of Commerce, 14th Street and Constitution Avenue NW, Washington, DC 20230; telephone: 202.482.0413.

SUPPLEMENTARY INFORMATION:

Scope of the Order

The scope of this order consists of sodium hexametaphosphate.[2] The merchandise subject to this order is currently classifiable in the Harmonized Tariff Schedule of the United States (''HTSUS'') statistical reporting number 2835.39.5000. However, it may also be imported as a blend or mixture under heading 3824.90.3900. Although the HTSUS subheadings are provided for convenience and customs purposes, the written product description, available in the *Order* remains dispositive.[3]

Final Finding of No Shipments

As noted in the *Preliminary Results,* because Hubei Xingfa Chemical Group Co., Ltd. (''Hubei Xingfa'') and Sichuan Mianzhu Norwest Phosphate Co. (''Norwest'') submitted timely no-shipment certifications and U.S. Customs and Border Protection (''CBP'') data indicated that there were no reviewable transactions for these companies during the period of review (''POR''), we determined that Hubei Xingfa and Norwest had no reviewable transactions of subject merchandise and retained their separate rate from the previous administrative review.[4] As no information, or argument, has been placed on the record to challenge these findings, for the final results we continue to find that Hubei Xingfa and Norwest had no reviewable transactions of subject merchandise, and thus, have retained their separate rate from the previous administrative review.

PRC-Wide Entity

As noted in the *Preliminary Results,* there are 13 other companies also under review in this segment, none of which have a separate rate from a prior segment of this proceeding.[5] As no information, or argument, has been placed on the record to challenge these findings, for the final results we continue to find that these companies have not established their eligibility for a separate rate, and they will continue to be considered part of the PRC-wide entity.

Final Results of Review

The weighted-average dumping margins for the POR are as follows:

Exporter	Weighted-average dumping margin (percent)
PRC-wide Entity [6]	188.05

Assessment

Upon issuance of the final results, the Department will determine, and CBP shall assess, antidumping duties on all appropriate entries. The Department intends to issue assessment instructions to CBP 15 days after the date of publication of the final results of review. The Department recently announced a refinement to its assessment practice in NME cases. Pursuant to this refinement in practice, for entries that were not reported by companies examined during this review, the Department will instruct CBP to liquidate such entries at the NME-wide rate. In addition, if the Department determines that an exporter under review had no shipments of the subject merchandise, any suspended entries that entered under that exporter's case number (*i.e.,* at that exporter's rate) will be liquidated at the NME-wide rate.[7]

Cash Deposit Requirements

The following cash deposit requirements will be effective upon publication of the final results of this administrative review for shipments of the subject merchandise from the PRC entered, or withdrawn from warehouse, for consumption on or after the publication date, as provided by sections 751(a)(2)(C) of the Tariff Act of 1930, as amended (the ''Act''): (1) For previously investigated or reviewed PRC and non-PRC exporters not listed above that received a separate rate in a prior segment of this proceeding, the cash deposit rate will continue to be the existing exporter-specific rate; (2) for all PRC exporters of subject merchandise that have not been found to be entitled to a separate rate, the cash deposit rate will be that for the PRC-wide entity; and (3) for all non-PRC exporters of subject merchandise which have not received their own rate, the cash deposit rate will be the rate applicable to the PRC exporter that supplied that non-PRC exporter. These deposit requirements, when imposed, shall remain in effect until further notice.

Reimbursement of Duties

This notice also serves as a final reminder to importers of their responsibility under section 351.402(f) of the Department's regulations to file a certificate regarding the reimbursement of antidumping duties prior to liquidation of the relevant entries during this POR. Failure to comply with this requirement could result in the Department's presumption that reimbursement of antidumping duties has occurred and the subsequent assessment of doubled antidumping duties.

---

[1] *See Sodium Hexametaphosphate from the People's Republic of China: Preliminary Results of Antidumping Duty Administrative Review; 2011–2012,* 77 FR 73011 (December 7, 2012) (''*Preliminary Results*'').

[2] *See* ''Decision Memorandum for Preliminary Results of Antidumping Duty Administrative Review: Sodium Hexametaphosphate from the People's Republic of China,'' from Christian Marsh, Deputy Assistant Secretary for Antidumping and Countervailing Duty Operations to Paul Piquado, Assistant Secretary for Import Administration, dated November 29, 2012 (''Preliminary Decision Memorandum'').

[3] *See Notice of Antidumping Duty Order: Sodium Hexametaphosphate from the People's Republic of China,* 73 FR 14772 (March 19, 2008) (''*Order*'').

[4] *See Preliminary Results,* 77 FR at 73011–12; *see also* Preliminary Decision Memorandum at 2–3.

[5] *See Preliminary Results,* 77 FR at 73012.

[6] The PRC-wide entity includes Aditya Birla Chemicals (Thailand) Ltd., Anhui Technology Import & Export Co., Ltd., Anshan Career Economic Trade Co., Ltd., Blue Science Limited, Boon Stream Chemical International Trade, Chengdu Boon Stream Chemical Industry Co., Ltd., Dezhou Hualude Hardware Products Co. Ltd., Gatehouse International Freight Ltd., Henan Sinchems Imp and Exp Co., Ltd., Hubei Xingfa Chemical Export Import Co. Ltd., Rushan Wooyoung Trading Co., Ltd., Unison Chemical Industrial Co, Ltd. and Zhejiang Chun-an Foreign Trade Co.

[7] *See Non-Market Economy Antidumping Proceedings: Assessment of Antidumping Duties,* 76 FR 65694 (October 24, 2011).

Administrative Protective Orders

This notice also serves as a reminder to parties subject to administrative protective order (''APO'') of their responsibility concerning the return or destruction of proprietary information disclosed under APO in accordance with section 351.305 of the Department's regulations, which continues to govern business proprietary information in this segment of the proceeding. Timely written notification of the return/destruction of APO materials or conversion to judicial protective order is hereby requested. Failure to comply with the regulations and terms of an APO is a violation which is subject to sanction.

We are issuing and publishing this administrative review and notice in accordance with sections 751(a)(1) and 777(i) of the Act.

Dated: March 21, 2013.

Paul Piquado,

Assistant Secretary for Import Administration.

[FR Doc. 2013–07254 Filed 3–27–13; 8:45 am]

BILLING CODE 3510–DS–P

DEPARTMENT OF COMMERCE

International Trade Administration

[A–552–801]

Certain Frozen Fish Fillets From the Socialist Republic of Vietnam: Initiation of Antidumping Duty New Shipper Review; 2012–2013

AGENCY: Import Administration, International Trade Administration, Department of Commerce.

DATES: *Effective Date:* March 28, 2013.

SUMMARY: The Department of Commerce (''the Department'') has received a timely request for a new shipper review (''NSR'') of the antidumping duty (''AD'') order on certain frozen fish fillets (''fish fillets'') from the Socialist Republic of Vietnam (''Vietnam''). The Department has determined that the request meets the statutory and regulatory requirements for initiation. The period of review (''POR'') for this NSR is August 1, 2012, through January 31, 2013.

FOR FURTHER INFORMATION CONTACT: Alexander Montoro, AD/CVD Operations, Office 9, Import Administration, International Trade Administration, U.S. Department of Commerce, 14th Street and Constitution Avenue NW., Washington, DC 20230; telephone: 202–482–0238.

SUPPLEMENTARY INFORMATION:

Background

The AD order on fish fillets from Vietnam was published on August 12, 2003.[1] On February 26, 2013, pursuant to section 751(a)(2)(B)(i) of the Tariff Act of 1930, as amended (''the Act''), and 19 CFR 351.214(b), the Department received a NSR request from Ngoc Ha Co. Ltd. Food Processing and Trading (''Ngoc Ha'').[2] Ngoc Ha certified that it is a producer and exporter of the subject merchandise and that it exported, or has sold for export, subject merchandise to the United States.[3]

Pursuant to section 751(a)(2)(B)(i)(I) of the Act and 19 CFR 351.214(b)(2)(i), Ngoc Ha certified that it did not export subject merchandise to the United States during the period of investigation (''POI'').[4] In addition, pursuant to section 751(a)(2)(B)(i)(II) of the Act and 19 CFR 351.214(b)(2)(iii)(A), Ngoc Ha certified that, since the initiation of the investigation, it has never been affiliated with any Vietnamese exporter or producer who exported subject merchandise to the United States during the POI, including those respondents not individually examined during the investigation.[5] As required by 19 CFR 351.214(b)(2)(iii)(B), Ngoc Ha also certified that its export activities were not controlled by the central government of Vietnam.[6]

In addition to the certifications described above, pursuant to 19 CFR 351.214(b)(2)(iv), Ngoc Ha submitted documentation establishing the following: (1) The date on which it first shipped subject merchandise for export to the United States; (2) the volume of its first shipment; and (3) the date of its first sale to an unaffiliated customer in the United States.[7]

Finally, the Department conducted a U.S. Customs and Border Protection (''CBP'') database query and confirmed the price, quantity, date of sale, and date of entry of the sale at issue. In addition, the Department confirmed that the data on any subsequent shipments corresponds with the information provided by Ngoc Ha.[8]

Initiation of New Shipper Review

Pursuant to section 751(a)(2)(B) of the Act and 19 CFR 351.214(d)(1), and based on the documentation provided by Ngoc Ha, we find that the request submitted by Ngoc Ha meets the requirements for initiation of the NSR for shipments of fish fillets from Vietnam.[9] The POR is August 1, 2012, through January 31, 2013.[10] Absent a determination that the case is extraordinarily complicated, the Department intends to issue the preliminary results of this NSR within 180 days from the date of initiation and the final results within 270 days from the date of initiation.[11]

It is the Department's usual practice, in cases involving non-market economies, to require that a company seeking to establish eligibility for an AD rate separate from the country-wide rate provide evidence of *de jure* and *de facto* absence of government control over the company's export activities. Accordingly, we will issue a questionnaire to Ngoc Ha that will include a separate-rate section. The review of Ngoc Ha will proceed if the response provides sufficient indication that it is not subject to either *de jure* or *de facto* government control with respect to its exports of fish fillets.

We will instruct CBP to allow, at the option of the importer, the posting, until the completion of the review, of a bond or security in lieu of a cash deposit for each entry of the subject merchandise from the requesting company in accordance with section 751(a)(2)(B)(iii) of the Act and 19 CFR 351.214(e). Because Ngoc Ha certified that it both produced and exported the subject merchandise, the sale of which is the basis for the new-shipper request for review, we will instruct CBP to permit the use of a bond only for subject merchandise which Ngoc Ha both produced and exported.

Interested parties requiring access to proprietary information in this NSR should submit applications for

[1] *See Notice of Antidumping Duty Order: Certain Frozen Fish Fillets From the Socialist Republic of Vietnam,* 68 FR 47909 (August 12, 2003).

[2] *See* Letter from Ngoc Ha, ''Re: Certain Frozen Fish Fillets from the Socialist Republic of Vietnam: Request for New Shipper Review,'' dated February 26, 2013.

[3] *See Id.* at 1–2 and at Exhibit 1.

[4] *Id.* at Exhibit 2.

[5] *Id.*

[6] *Id.*

[7] *Id.* at Exhibit 1; *See also* Memorandum to the File from Scot Fullerton, Program Manager, ''Certain Frozen Fish Fillets from the Socialist Republic of Vietnam: Placing CBP data on the record,'' dated concurrently with this notice.

[8] *See* Memorandum to the File from Scot Fullerton, Program Manager, ''Certain Frozen Fish Fillets from the Socialist Republic of Vietnam: New Shipper Initiation Checklists,'' dated concurrently with this notice; *see also* Memorandum to the File from Scot Fullerton, Program Manager, ''Certain Frozen Fish Fillets from the Socialist Republic of Vietnam: Placing CBP data on the record,'' dated concurrently with this notice.

[9] *See* Memorandum to the File from Scot Fullerton, Program Manager, ''Certain Frozen Fish Fillets from the Socialist Republic of Vietnam: New Shipper Initiation Checklist,'' dated concurrently with this notice.

[10] *See* 19 CFR 351.214(g)(1)(i)(B).

[11] *See* section 751(a)(2)(B)(iv) of the Act.

disclosure under administrative protective order, in accordance with 19 CFR 351.305 and 19 CFR 351.306.

This initiation and notice are in accordance with section 751(a)(2)(B) of the Act, 19 CFR 351.214, and 19 CFR 351.221(c)(1)(i).

Dated: March 21, 2013.

Gary Taverman,

Senior Advisor for Antidumping and Countervailing Duty Operations.

[FR Doc. 2013–07253 Filed 3–27–13; 8:45 am]

BILLING CODE 3510–DS–P

DEPARTMENT OF COMMERCE

International Trade Administration

[A–570–893: A–570–900]

Certain Frozen Warmwater Shrimp From the People's Republic of China and Diamond Sawblades and Parts Thereof From the People's Republic of China: Notice of Implementation of Determinations Under Section 129 of the Uruguay Round Agreements Act and Partial Revocation of the Antidumping Duty Orders

AGENCY: Import Administration, International Trade Administration, Department of Commerce.

SUMMARY: On March 22, 2013, the U.S. Trade Representative (''USTR'') instructed the Department of Commerce (''Department'') to implement its determinations under section 129 of the Uruguay Round Agreements Act (''URAA'') regarding the antidumping investigations of certain frozen warmwater shrimp (''shrimp'') from the People's Republic of China ('PRC'') and diamond sawblades and parts thereof (''sawblades'') from the PRC. The Department issued its final determinations on March 4, 2013, regarding the offsetting of dumped comparisons with non-dumped comparisons when making average-to-average comparisons of export price and normal value in the investigation challenged by the PRC before the World Trade Organization (''WTO'') in *United States—Anti-Dumping Measures on Certain Shrimp and Diamond Saw Blades from China* (DS422). The Department is now implementing these determinations.

DATES: The effective date of this determination is March 22, 2013.

FOR FURTHER INFORMATION CONTACT: Irene Gorelik (shrimp) and Matthew Renkey (sawblades), AD/CVD Operations, Import Administration, International Trade Administration, U.S. Department of Commerce, 14th Street and Constitution Avenue NW., Washington, DC 20230; telephone: (202) 482–6905 and (202) 482–2312, respectively.

SUPPLEMENTARY INFORMATION:

Background

At the written request of USTR, the Department informed interested parties on September 5, 2012, that it was initiating proceedings under section 129 of the URAA to implement the findings of the WTO dispute settlement panel in *United States—Anti-Dumping Measures on Certain Shrimp and Diamond Saw blades from China (DS422)* (''*Panel Report*''). On December 7, 2012, the Department issued the memorandum entitled ''Preliminary Results Under Section 129 of the Uruguay Round Agreements Act: Antidumping Measures on Certain Frozen and Canned Warmwater Shrimp from the People's Republic of China,'' dated December 7, 2012 (''Preliminary Shrimp 129 Determination''), in which the Department recalculated the weighted-average dumping margins from the antidumping investigation of shrimp from the PRC [1] by applying the calculation methodology described in *Antidumping Proceedings: Calculation of the Weighted-Average Dumping Margin During an Antidumping Investigation; Final Modification,* 71 FR 77722 (December 27, 2006) (''*Final Modification for Investigations*'').

On December 17, 2012, the Department issued the memorandum entitled ''Preliminary Results under Section 129 of the Uruguay Round Agreements Act: Antidumping Measures on Diamond Sawblades and Parts Thereof from the People's Republic of China,'' dated December 17, 2012 (''Preliminary Sawblades 129 Determination''), in which the Department recalculated one of the weighted-average dumping margins from the antidumping investigation of sawblades from the PRC [2] by applying the calculation methodology described in *Final Modification for Investigations.*

The Department invited interested parties for both shrimp and sawblades to comment on the respective preliminary recalculations. After receiving comments and rebuttal comments from the interested parties in both cases, the Department issued its final section 129 determinations on March 4, 2013.[3]

In a March 22, 2013, letter, USTR notified the Department that, consistent with section 129(b)(3) of the URAA, consultations with the Department and the appropriate congressional committees with respect to the March 4, 2013, determinations have been completed. On March 22, 2013, in accordance with section 129(b)(4) of the URAA, USTR directed the Department to implement these determinations.

Nature of the Proceeding

Section 129 of the URAA governs the nature and effect of determinations issued by the Department to implement findings by WTO dispute settlement panels and the Appellate Body. Specifically, section 129(b)(2) of the URAA provides that, ''notwithstanding any provision of the Tariff Act of 1930,'' within 180 days of a written request from the USTR, the Department shall issue a determination that would render its actions not inconsistent with an adverse finding of a WTO panel or the Appellate Body report. The Statement of Administrative Action, URAA, H. Doc. 316, Vol. 1, 103d Cong. (1994) (''SAA''), variously refers to such a determination by the Department as a ''new,'' ''second,'' and ''different'' determination.[4] After consulting with

---

[1] *See Notice of Final Determination of Sales at Less Than Fair Value: Certain Frozen and Canned Warmwater Shrimp From the People's Republic of China,* 69 FR 70997 (December 8, 2004) (''*PRC Shrimp Final Determination*''). *See also Notice of Amended Final Determination of Sales at Less Than Fair Value and Antidumping Duty Order: Certain Frozen Warmwater Shrimp From the People's Republic of China,* 70 FR 5149 (February 1, 2005) (''*PRC Shrimp Amended Final*'' or ''*PRC Shrimp Order*''). On January 21, 2005, the ITC notified the Department of its final determination that two domestic like products exist for the merchandise covered by the Department's investigation: (i) Certain non-canned warmwater shrimp and prawns, and (ii) canned warmwater shrimp and prawns. The ITC determined that there is no injury regarding imports of canned warmwater shrimp and prawns from the PRC. Therefore, canned warmwater shrimp and prawns is not covered by the *PRC Shrimp Order.*

[2] *See Final Determination of Sales at Less than Fair Value and Final Partial Affirmative Determination of Critical Circumstances: Diamond Sawblades and Parts Thereof from the People's Republic of China,* 71 FR 29303 (May 22, 2006). *See also Notice of Amended Final Determination of Sales at Less Than Fair Value: Diamond Sawblades and Parts Thereof from the People's Republic of China,* 71 FR 35864 (June 22, 2006); *Diamond Sawblades and Parts Thereof from the People's Republic of China and the Republic of Korea: Antidumping Duty Orders,* 74 FR 57145 (November 4, 2009) (''*Sawblades Order*'').

[3] *See* Memoranda from Christian Marsh to Paul Piquado, ''Final Results of the Proceeding under Section 129 of the Uruguay Round Agreements Act: Antidumping Measures on Certain Frozen and Canned Warmwater Shrimp from the People's Republic of China,'' dated March 4, 2013 (''Shrimp Final 129 Determination Memo''), and ''Final Results of the Proceeding under Section 129 of the Uruguay Round Agreements Act: Antidumping Measures on Diamond Sawblades and Parts Thereof from the People's Republic of China,'' dated March 4, 2013 (''Sawblades Final 129 Determination Memo'').

[4] *See* Statement of Administrative Action accompanying the URAA, H. Doc. 316, Vol. 1, 103d Cong. (1994) (''SAA'') at 1025, 1027.

the Department and the appropriate congressional committees, the USTR may direct the Department to implement, in whole or in part, the new determinations made under section 129 of the URAA.[5] Pursuant to section 129(c) of the URAA, the new determinations shall apply with respect to unliquidated entries of the subject merchandise that are entered, or withdrawn from warehouse, for consumption on or after the date on which the USTR directs the Department to implement the new determinations.[6] The new determinations are subject to judicial review separate and apart from judicial review of the Department's original determination.[7]

Analysis of Comments Received

The issues raised in the case and rebuttal briefs submitted by interested parties in both the shrimp and sawblades proceedings are addressed in their respective final determinations,[8] which are hereby adopted by this notice. A list of the issues, which the parties raised and we addressed in both the Shrimp Final 129 Determination Memo and the Sawblades Final 129 Determination Memo, is attached to this notice as Appendix I. Both the Shrimp Final 129 Determination Memo and the Sawblades Final 129 Determination Memo are public documents and are on file electronically via Import Administration's Antidumping and Countervailing Duty Centralized Electronic Service System (''IA ACCESS''). Access to IA ACCESS is available to registered users at *http://iaaccess.trade.gov* and is available to all parties in the Central Records Unit, room 7046 of the main Department of Commerce building. In addition, a complete version of both memoranda can be accessed directly on the Internet at *http://www.trade.gov/ia/.* The signed Shrimp Final 129 Determination Memo and the Sawblades Final 129 Determination Memo and the respective electronic versions of these memoranda are identical in content.

Final Antidumping Duty Margins

The recalculated margins for shrimp, unchanged from the Preliminary Shrimp 129 Determination, are:

Manufacturer/exporter	Section 129 results
Allied Pacific Group	0.00%
Yelin Enterprise Co. Hong Kong	0.00%
Shantou Red Garden Foodstuff Co., Ltd	0.00%
Separate Rate Companies[9]	22.58%

The recalculated margin for sawblades, unchanged from the Preliminary Sawblades 129 Determination, is:

Manufacturer/exporter	Section 129 results
Advanced Technology & Materials Co., Ltd. (''AT&M'')[10]	0.00%

Partial Revocation of the Antidumping Duty Order for Certain Frozen Warmwater Shrimp From the PRC

Because the Department has recalculated dumping margins of zero percent for Allied, Red Garden, and Yelin, the Department is revoking the *PRC Shrimp Order* with respect to Allied, Red Garden, and Yelin[11], for entries made on or after March 22, 2013. The Department's practice, at the time of the underlying investigation, with respect to revocation or exclusions of companies from an antidumping duty order was to exclude companies in specific manufacturer-exporter combinations.[12] Accordingly, the Department will instruct CBP to liquidate without regard to antidumping duties, specific manufacturer-exporter combinations for Allied's[13], Red Garden's[14], and Yelin's[15] entries of certain frozen warmwater shrimp which were entered, or withdrawn from warehouse, for consumption on or after March 22, 2013, and to discontinue the collection of cash deposits for estimated antidumping duties for the specified manufacturer-exporter combinations for Allied, Red Garden, and Yelin.

However, in the *PRC Shrimp Amended Final,* the Department assigned a dumping margin based on section 776 of the Act in the antidumping duty investigation to the PRC-Wide Entity. The Department has not recalculated this dumping margin because it is not affected by the implementation of the *Panel Report.* This dumping margin was based on information contained in the petition and ''zeroing'' was not used to calculate

[5] *See* 19 U.S.C. 3538(b)(4).

[6] *See* 19 U.S.C. 3538(c).

[7] *See* 19 U.S.C. 1516a(a)(2)(B)(vii).

[8] *See* Shrimp Final 129 Determination Memo and Sawblades Final 129 Determination Memo.

[9] The 39 Separate Rate Companies are: Asian Seafoods (Zhanjiang) Co., Ltd.; Beihai Zhengwu Industry Co., Ltd.; Chaoyang Qiaofeng Group Co., Ltd., aka (Shantou Qiaofeng (Group) Co., Ltd.), aka (Shantou/Chaoyang Qiaofeng); Chenghai Nichi Lan Food Co., Ltd.; Dalian Ftz Sea-Rich International Trading Co., Ltd.; Dongri Aquatic Products Freezing Plants; Fuqing Dongwei Aquatic Products Industry Co., Ltd.; Gallant Ocean (Liangjiang) Co., Ltd.; Hainan Fruit Vegetable Food Allocation Co., Ltd.; Hainan Golden Spring Foods Co., Ltd./Hainan Brich Aquatic Products Co., Ltd.; Jinfu Trading Co., Ltd.; Kaifeng Ocean Sky Industry Co., Ltd.; Leizhou Zhulian Frozen Food Co., Ltd.; Pingyang Xinye Aquatic Products Co., Ltd.; Savvy Seafood Inc.; Shanghai Taoen International Trading Co., Ltd.; Shantou Wanya Food Factory Co., Ltd.; Shantou Jinyuan District Mingfeng Quick-Frozen Factory; Shantou Long Feng Foodstuffs Co., Ltd. (Shantou Longfeng Foodstuffs Co., Ltd.); Shantou Ocean Freezing Industry and Trade General Corporation; Shantou Shengping Oceanstar Business Co., Ltd.; Shantou Yuexing Enterprise Company; Shantou Ruiyuan Industry Co., Ltd.; Shantou Freezing Aquatic Product Food Stuffs Co.; Shantou Jinhang Aquatic Industry Co., Ltd.; Xuwen Hailang Breeding Co., Ltd.; Yantai Wei-Cheng Food Co., Ltd.; Zhangjiang Bobogo Ocean Co., Ltd.; Zhangjiang Newpro Food Co., Ltd.; Zhanjiang Go-Harvest Aquatic Products Co., Ltd.; Zhanjiang Runhai Foods Co., Ltd.; Zhanjiang Evergreen Aquatic Product Science and Technology Co., Ltd.; Zhanjiang Universal Seafood Corp.; Zhejiang Cereals, Oils & Foodstuff Import & Export Co., Ltd.; Zhoushan Xifeng Aquatic Co., Ltd.; Zhoushan Huading Seafood Co., Ltd.; Zhoushan Cereals, Oils and Foodstuffs Import and Export Co., Ltd.; Zhoushan Lizhou Fishery Co., Ltd.; and Zhoushan Diciyuan Aquatic Products Co., Ltd.

[10] Collectively with Beijing Gang Yan Diamond Product Company (''BGY'') and Yichang HXF Circular Saw Industrial Co., Ltd (''HXF''), a single entity.

[11] The Department is not revoking the *PRC Shrimp Order* with respect to Hilltop International as part of this implementation. *See* Shrimp Final 129 Determination Memo at Comment 1.

[12] *See, e.g., Brake Rotors From the People's Republic of China: Final Results and Partial Rescission of the Fifth Antidumping Duty Administrative Review and Final Results of the Seventh New Shipper Review,* 68 FR 25861 (May 14, 2003) and accompanying Issues and Decision Memorandum at Comment 1. *See also Notice of Final Determination of Sales at Less Than Fair Value: Certain Frozen and Canned Warmwater Shrimp From the People's Republic of China,* 69 FR 70997, 71004 (December 8, 2004), where the Department stated that ''the Department does not require any cash deposit or posting of a bond for Zhanjiang Guolian when the subject merchandise is produced and exported by Zhanjiang Guolian.'' Subsequently, in the *PRC Shrimp Order,* we stated that ''pursuant to 735(c)(1)(B) of the Act, we will instruct CBP to suspend liquidation of all entries of certain frozen warmwater shrimp and prawns from the PRC (except merchandise *produced and exported* by Zhanjiang Guolian because this company has a de minimis margin)'' (emphasis added). *See PRC Shrimp Order,* 70 FR at 5152.

[13] Revocation for Allied is specific to: merchandise manufactured by Allied Pacific Aquatic Products (Zhanjiang) Co., Ltd., or Allied Pacific Aquatic Products (Zhongshan) Co., Ltd., or Allied Pacific Food (Dalian) Co., Ltd., and exported by Allied Pacific (HK) Co., Ltd., or Allied Pacific Food (Dalian) Co., Ltd.

[14] Revocation for Red Garden is specific to: merchandise manufactured by Red Garden Food Processing Co., Ltd., or Chaoyang Jindu Hengchang Aquatic Products Enterprise Co., Ltd., or Raoping County Longfa Seafoods Co., Ltd., or Meizhou Aquatic Products Quick-Frozen Industry Co., Ltd., or Shantou Jinyuan District Mingfeng Quick-Frozen Factory, or Shantou Long Feng Foodstuffs Co., Ltd., and exported by Shantou Red Garden Foodstuff Co., Ltd. or Red Garden Food Processing Co., Ltd.

[15] Revocation for Yelin is specific to: merchandise manufactured by Shantou Yelin Frozen Seafood Co., Ltd., or Yangjiang City Yelin Hoi Tat Quick Frozen Seafood Co., Ltd., or Fuqing Yihua Aquatic Food Co., Ltd., or Shantou Jinyuan District Mingfeng Quick-Frozen Factory and exported by Yelin Enterprise Co. Hong Kong or Shantou Yelin Frozen Seafood Co., Ltd.

the dumping margins in the petition.[16] In addition, the Department must determine an appropriate dumping margin for separate rate companies not selected for individual examination during the investigation. When, as here, the only available rates are zero, *de minimis,* or based upon adverse facts available, the Department looks to section 735(c)(5) of the Tariff Act of 1930, as amended (''Act'') for guidance, which instructs the Department to use ''any reasonable method'' for assigning the rate to non-selected respondents.[17] The Department determines that a reasonable method for determining the separate rate for non-selected respondents is a simple average of the adverse-facts available dumping margin assigned to the PRC-Wide Entity and each of the calculated zero or *de minimis* dumping margins calculated in the original shrimp investigation or as part of the final section 129 determination for shrimp for the PRC.[18] This is consistent with our past practice in the *2007 Section 129 Determinations.*[19] The separate rate margin is now 22.58 percent. Consequently, because the PRC-wide entity rate of 112.81 percent and the separate rate of 22.58 percent for non-individually examined companies are above *de minimis,* we will not wholly revoke the *PRC Shrimp Order.*

The Department will instruct CBP to continue to collect cash deposits for estimated antidumping duties from the separate rate companies and from the PRC-wide entity, as the *PRC Shrimp Order,* in whole, will not be revoked. Further, if any separate rate companies are subject to the investigation's separate rate cash deposit at the time of implementation (*i.e.,* if a separate rate company from the investigation has not had the investigation separate rate cash deposit superseded by a subsequent review rate) we will instruct CBP to collect cash deposits at the new separate rate of 22.58 percent for subject merchandise entered, or withdrawn from warehouse, for consumption on or after March 22, 2013, the date on which USTR directed the Department to implement this 129 determination. As noted above, the PRC-wide entity rate has not changed from the *PRC Shrimp Amended Final and Order,* and continues to be 112.81 percent.

Partial Revocation of the Antidumping Duty Order for Diamond Sawblades and Parts Thereof

Because the Department has recalculated a dumping margin of zero percent for AT&M, the Department is revoking the *Sawblades Order* with respect to AT&M, for entries made on or after March 22, 2013.[20] Accordingly, the Department will instruct CBP to liquidate without regard to antidumping duties, entries of sawblades manufactured and exported by AT&M which were entered, or withdrawn from warehouse, for consumption on or after March 22, 2013, and to discontinue the collection of cash deposits for estimated antidumping duties for AT&M. No other margin for any other entity is affected by this Section 129 Determination for sawblades and parts thereof from the PRC. We will instruct CBP to continue to suspend liquidation of all entries of subject merchandise from all other exporters or producers, except for AT&M, as stated above. We will instruct CBP to continue to require a cash deposit equal to the estimated amount by which the normal value exceeds the U.S. price.

These amended final determinations are issued and published in accordance with section 129(c)(2)(A) of the URAA.

Dated: March 22, 2013.

Paul Piquado,

Assistant Secretary for Import Administration.

Appendix I

Certain Frozen Warmwater Shrimp

DISCUSSION OF THE ISSUES:

Comment 1: Whether the Order Should Be Revoked with Respect to Yelin and Hilltop

Comment 2: Revocation of the Order with Respect to Red Garden

Diamond Sawblades and Parts Thereof

DISCUSSION OF THE ISSUES:

Comment 1: Whether the Order Should Be Revoked with Respect to AT&M

Comment 2: Whether We Should Permit Petitioner to Submit a Targeted Dumping Allegation

[FR Doc. 2013–07251 Filed 3–27–13; 8:45 am]

BILLING CODE 3510–DS–P

[16] *See Notice of Initiation of Antidumping Duty Investigations: Certain Frozen and Canned Warmwater Shrimp From Brazil, Ecuador, India, Thailand, the People's Republic of China and the Socialist Republic of Vietnam,* 69 FR 3876, 3880–3881 (January 27, 2004) (where the Department stated that, ''based on comparisons of EP to NV, calculated in accordance with section 773(c) of the Act, the estimated recalculated dumping margins for certain frozen and canned warmwater shrimp from the PRC range from 112.81 percent to 263.68 percent'').

[17] *See* section 735(c)(5)(B) of the Act.

[18] *See* Shrimp Final 129 Determination Memo at 7–8.

[19] *See Implementation of the Findings of the WTO Panel in U.S.—Zeroing (EC): Notice of Determinations Under Section 129 of the Uruguay Round Agreements Act and Revocations and Partial Revocations of Certain Antidumping Duty Orders,* 72 FR 25261, 25262–63 (May 4, 2007) (''*2007 Section 129 Determinations*'') where the Department calculated a simple average of existing AFA margins with above *de minimis*/zero margins as an All-Others rate following section 129 recalculations for the mandatory respondents that resulted in zero or *de minimis* rates.

[20] Pursuant to a Temporary Restraining Order (''TRO'') issued by the U.S. Court of International Trade covering sawblades from the PRC on March 6, 2013, and continued on March 19, 2013, Commerce and CBP are restrained from: (1) Excluding or revoking the AT&M entity and/or any of its members (as described in the TRO) from the *Sawblades Order;* (2) ordering the lifting of the suspension of liquidation regarding incoming entries produced and/or exported by these companies; and (3) making or permitting liquidation of any unliquidated entries produced and/or exported by these companies that are subject to the final determination of the less-than-fair-value investigation. Consistent with the final section 129 determination and recognizing that we cannot exclude or revoke the AT&M entity and/or any of its members from the *Sawblades Order,* future entries of such merchandise are subject to suspension of liquidation at the cash deposit rate of zero. Subsequent action will be consistent with the final court decision.

DEPARTMENT OF COMMERCE

National Oceanic and Atmospheric Administration

RIN 0648–XC586

Atlantic Coastal Fisheries Cooperative Management Act Provisions; General Provisions for Domestic Fisheries; Application for Exempted Fishing Permits

AGENCY: National Marine Fisheries Service (NMFS), National Oceanic and Atmospheric Administration (NOAA), Commerce.

ACTION: Notice; request for comments.

SUMMARY: The Commercial Fisheries Research Foundation (CFRF) is proposing to explore the use of several data recording devices in an industry-based pilot study that would effectively relay more accurate, detailed, and timely American lobster data to fisheries managers and scientists. The CFRF is also proposing to use vent-less traps in order to determine the abundance and distribution of juvenile American lobsters in Lobster Management Areas (LMAs) 2 and 3. This pilot study would utilize 12 Federal commercial fishing vessels; 6 vessels in each of the 2 management areas.

Regulations under the Magnuson-Stevens Fishery Conservation and Management Act require publication of this notification to provide interested parties the opportunity to comment on applications for proposed EFPs.

DATES: Comments must be received on or before April 12, 2013.

ADDRESSES:

- *Email:* Comments on this notice may be submitted by email. The mailbox address for providing email

comments is *NERO.EFP@noaa.gov.* Include in the subject line ''Comments on CFRF Lobster EFP.''

• *Mail:* Written comments should be sent to: John K. Bullard, Regional Administrator, NMFS, NE Regional Office, 55 Great Republic Drive, Gloucester, MA 01930. Mark the outside of the envelope ''Comments on CFRF Lobster EFP.''

• *Fax:* (978) 281–9135.

FOR FURTHER INFORMATION CONTACT: Maria Jacob, Environmental Technician, 978–281–9180, *Maria.Jacob@noaa.gov.*

SUPPLEMENTARY INFORMATION: The CFRF submitted a complete application for an EFP on March 8, 2013. To conduct its research on the abundance and distribution of juvenile American lobster in LMAs 2 and 3, the CFRF is requesting exemptions from the following Federal lobster regulations: (1) Gear specifications to allow for closed escape vents, as prohibited in 50 CFR 697.21(c); (2) trap limits to be exceeded by three additional traps per fishing vessel, for a total of 36 additional traps, as prohibited in § 697.19(a)(2) for LMA 2, and § 697.19(b)(5) for LMA 3; and (3) trap tag requirements, as specified in § 697.19(f). Sampling would take place in the following statistical areas: 515, 521, 522, 525, 526, 533, 534, 537, 538, 539, 541, 542, 543, 561, 562, 613, 615, 616, 622, 623, 624, 626, 627, 628, 629, 632, 633, 634, 636, 637, 638, and 640.

Funding for this pilot study will be provided through NOAA grants NA08NMF4720595, NA10NMF4720285, and NA09NMF4720414, as part of the Southern New England Collaborative Research Initiative Program (SNECRI). One of the main objectives of the SNECRI is to improve collection and management of fishery-dependent data; this pilot study would attempt to achieve this goal.

The proposed pilot study would take place during regular fishing activity, and sampling would take place on each vessel during three of its scheduled fishing trips per month. If an EFP is granted, there would be an additional 36 modified traps in the water during any given time, and for a period of one year. Each participating vessel would have up to three modified traps attached to a regular trap trawl, to be hauled daily or weekly. The addition of 36 modified traps would increase the total number of traps in the fishery by 0.003 percent, a very small number compared to the number of lobster traps deployed in the fishery.

Modifications to a conventional lobster trap would include a closed escape vent, smaller mesh size, and smaller entrance head. These modified traps would be attached to one or two randomly selected trap trawl(s) during regular fishing operations. Lobsters retrieved from these modified traps would remain onboard for a short period of time to allow for sampling, after which they would be returned to the water. The CFRF would submit progress reports twice a year to cover the first and second half of the 12-month sampling period. The exact specification for the chosen design would be provided in the first progress report.

Biological information will be collected on both kept and discarded lobsters, including: Carapace length; sexual determination; and presence of eggs, v-notches, and shell disease. For every trap trawl hauled during a designated sampling trip, commercial fishermen would be expected to sample 100 lobsters, or 20 traps if there are less than 100 lobsters to sample in a randomly chosen trap trawl. This pilot study proposes to use several recording devices, including onboard electronic calipers for length measurements, video cameras, and waterproof tablets. Data will be recorded using waterproof tablets, and the information will be uploaded using wireless internet connection once the vessel returns to port.

If approved, the applicant may request minor modifications and extensions to the EFP throughout the year. EFP modifications and extensions may be granted without further notice if they are deemed essential to facilitate completion of the proposed research and have minimal impacts that do not change the scope or impact of the initially approved EFP request. Any fishing activity conducted outside the scope of the exempted fishing activity would be prohibited.

Authority: 16 U.S.C. 1801 *et seq.*

Dated: March 25, 2013.

Kara Meckley,

Acting Deputy Director, Office of Sustainable Fisheries, National Marine Fisheries Service.

[FR Doc. 2013–07258 Filed 3–27–13; 8:45 am]

BILLING CODE 3510–22–P

DEPARTMENT OF COMMERCE

National Oceanic and Atmospheric Administration

RIN 0648–XC595

Gulf of Mexico Fishery Management Council; Public Meetings

AGENCY: National Marine Fisheries Service (NMFS), National Oceanic and Atmospheric Administration (NOAA), Commerce.

ACTION: Notice of public meetings.

SUMMARY: The Gulf of Mexico Fishery Management Council (Council) will convene a public meeting.

DATES: The meeting will be held Monday, April 15, 2013 through Thursday, April 18, 2013.

ADDRESSES: The meeting will be held at the Courtyard Marriott, 1600 East Beach Boulevard, Gulfport, MS 39501; telephone: (228) 864–4310.

Council address: Gulf of Mexico Fishery Management Council, 2203 North Lois Avenue, Suite 1100, Tampa, FL 33607.

FOR FURTHER INFORMATION CONTACT: Dr. Stephen Bortone, Executive Director, Gulf of Mexico Fishery Management Council; telephone: (813) 348–1630.

SUPPLEMENTARY INFORMATION:

Committees

Monday, April 15, 2013

8:30 a.m.–11:30 p.m.—The Full Council in a CLOSED SESSION with the Advisory Panel Selection Committee will meet to review and appoint members to the Advisory Panels.

-Recess-

1 p.m.–2:30 p.m.—The Full Council in a CLOSED SESSION with the Scientific and Statistical Selection Committee will meet to review and appoint members to the Scientific and Statistical Committees.

2:30 p.m.–3:30p.m.—The Budget/Personnel Committee will meet to review the 2013 Budget.

3:30 p.m.–4 p.m.—The Shrimp Management Committee will review Framework Action to Fund Electronic Logbook Program or the Shrimp Fishery of the Gulf of Mexico.

4 p.m.–5 p.m.—The Red Drum Management Committee will review the History of Red Drum Management in the Gulf of Mexico and past meeting discussions and escapement rates; receive an overview of current research; discuss Options for Opening the EEZ to Harvest of Red Drum; and receive explanation of necessary steps to Open Harvest from the National Marine Fisheries Service (NMFS).

-Recess-

Tuesday, April 16, 2013

8:30 a.m.–9:15 a.m.—The Sustainable Fisheries/Ecosystem Committee will review the Integrated Ecosystem Assessments, and discuss proposed revisions to the ABC Control Rule.

9:15 a.m.–12 noon and 1:30 p.m.—3:30 p.m.—The Reef Fish Management Committee will receive the status of

SEDAR 31 Red Snapper Benchmark Assessment; review Amendment 39 Options Paper—Regional Management for Recreational Red Snapper; discuss Red Snapper 5-year IFQ Review and IFQ Inter-sector Trading Issues; review scoping and written comments on For-Hire Days-at-Sea Pilot Program for Red Snapper; take Final Action—Permit Transfer and Renewal Requirements for Gulf of Mexico Charter/Headboat Permits (passenger capacity); discuss White Paper on Live Animal Collection for Public Displays; review status of Action to Define For-Hire Fishing Under Contractual Services; and, discuss Exempted Fishing Permits related to Reef Fish (if any).

3:30 p.m.–5:30 p.m.—The Mackerel Management Committee will review and approve the minutes from the March 2013 Joint GMFMC/SAFMC Mackerel Committee meeting; discuss Spanish Mackerel and cobia (SEDAR) Benchmark Assessments; receive recommendations from the Scientific and Statistical Committee for Stock Assessments; review a draft Joint Amendment 20—Modifications to the Coastal Migratory Pelagic Zones; and, receive a summary of South Atlantic Council Motions and Recommendations for Amendment 20.

-Recess-

Immediately following the Committee Recess will be the Informal Question & Answer Session on Gulf of Mexico Fishery Management Issues.

Wednesday, April 17, 2013

8:30 a.m.–11 a.m.—The Data Collection Committee will receive a Final Report on the For-Hire Electronic Logbook Pilot Study in the Gulf of Mexico; draft a Framework Action on modifications to Headboat Electronic Reporting for Reef Fish Resources in the Gulf of Mexico and Coastal Migratory Pelagics of the Gulf of Mexico and South Atlantic Regions; receive a status update on modifications to the Federally-Permitted Seafood Dealer Reporting Requirements; and, receive a summary from the Ad Hoc Private Recreational Data Collection Advisory Panel Meeting.

11 a.m.–11:45 a.m.—The Joint Artificial Reef/Habitat Protection Committees will receive summaries from the Ad Hoc Artificial Substrate Advisory Panel and Artificial Reef Fish meetings.

-Recess-

Council

Wednesday, April 17, 2013

1:30 p.m.—The Council meeting will begin with a Call to Order and Introductions.

1:35 p.m.–1:45 p.m.—The Council will review the agenda and approve the minutes.

1:45 p.m.–5:30 p.m.—The Council will receive public testimony on Framework Action to Fund Electronic Logbook Program for the Shrimp Fishery of the Gulf of Mexico and Permit Transfer and Renewal Requirements for Gulf of Mexico Charter/Headboat Permits (passenger capacity). The Council will also hold an open public comment period regarding any other fishery issues or concerns. People wishing to speak before the Council should complete a public comment card prior to the comment period.

-Recess-

Thursday, April 18, 2013

8:30 a.m.–8:45 a.m.—The Council will review and vote on Exempted Fishing Permits (EFP), if any.

8:45 a.m.–4 p.m.—The Council will receive committee reports from Advisory Panel Selection, Scientific and Statistical Committee Selection; Budget/Personnel, Joint Artificial Reef/Habitat Protection, Shrimp, Red Drum, Sustainable Fisheries/Ecosystem, Joint GMFMC/SAFMC Mackerel Committees, Mackerel, Data Collection and Reef Fish.

4 p.m.–4:15 p.m.—The Council will review Other Business items: SEDAR Schedule. Review of Action Schedule items will follow from 4:15 p.m.—4:30 p.m.

Although other non-emergency issues not on the agendas may come before the Council and Committees for discussion, in accordance with the Magnuson-Stevens Fishery Conservation and Management Act (Magnuson-Stevens Act), those issues may not be the subject of formal action during these meetings. Actions of the Council and Committees will be restricted to those issues specifically identified in the agendas and any issues arising after publication of this notice that require emergency action under Section 305(c) of the Magnuson-Stevens Act, provided the public has been notified of the Council's intent to take action to address the emergency. The established times for addressing items on the agenda may be adjusted as necessary to accommodate the timely completion of discussion relevant to the agenda items. In order to further allow for such adjustments and completion of all items on the agenda, the meeting may be extended from, or completed prior to the date/time established in this notice.

Special Accommodations

These meetings are physically accessible to people with disabilities. Requests for sign language interpretation or other auxiliary aids should be directed to Kathy Pereira at the Council Office (see **ADDRESSES**) at least 5 working days prior to the meeting.

Dated: March 25, 2013.

Tracey L. Thompson,

Acting Deputy Director, Office of Sustainable Fisheries National Marine Fisheries Service.

[FR Doc. 2013–07188 Filed 3–27–13; 8:45 am]

BILLING CODE 3510–22–P

DEPARTMENT OF COMMERCE

National Oceanic and Atmospheric Administration

RIN 0648–XC591

North Pacific Fishery Management Council; Public Meeting

AGENCY: National Marine Fisheries Service (NMFS), National Oceanic and Atmospheric Administration (NOAA), Commerce.

ACTION: Notice of a public workshop.

SUMMARY: The North Pacific Fishery Management Council (Council) will host a public workshop on considerations of conservation, management, and policy in spatial management of catch limits.

DATES: The workshop will be held on April 16, 2013, from 9 a.m. to 5 p.m.

ADDRESSES: The workshop will be held at NMFS Alaska Fishery Science Center, Oceanographer Seminar Room, Building 5, Seattle WA.

Council address: North Pacific Fishery Management Council, 605 W. 4th Ave., Suite 306, Anchorage, AK 99501–2252.

FOR FURTHER INFORMATION CONTACT: Jane DiCosimo, Council staff; telephone: (907) 271–2809.

SUPPLEMENTARY INFORMATION: The workshop objectives and agenda can be found here: *https://www.alaskafisheries.noaa.gov/npfmc/PDFdocuments/meetings/SpatialMgtWkshop413.pdf.* Interested parties also may participate in the workshop via Webex. Details will be posted on the Council Web site.

Although non-emergency issues not contained in this agenda may come before this group for discussion, those issues may not be the subject of formal action during this meeting. Action will be restricted to those issues specifically listed in this notice and any issues arising after publication of this notice that require emergency action under section 305(c) of the Magnuson-Stevens Fishery Conservation and Management Act, provided the public has been

notified of the Council's intent to take final action to address the emergency.

Special Accommodations

The meeting is physically accessible to people with disabilities. Requests for sign language interpretation or other auxiliary aids should be directed to Gail Bendixen at (907) 271–2809 at least 7 working days prior to the meeting date.

Dated: March 25, 2013.

Tracey L. Thompson,

Acting Deputy Director, Office of Sustainable Fisheries, National Marine Fisheries Service.

[FR Doc. 2013–07186 Filed 3–27–13; 8:45 am]

BILLING CODE 3510–22–P

DEPARTMENT OF COMMERCE

National Oceanic and Atmospheric Administration

RIN 0648–XC594

New England Fishery Management Council; Public Meeting

AGENCY: National Marine Fisheries Service (NMFS), National Oceanic and Atmospheric Administration (NOAA), Commerce.

ACTION: Notice; public meeting.

SUMMARY: The New England Fishery Management Council's (Council) Recreational Advisory Panel will meet to consider actions affecting New England fisheries in the exclusive economic zone (EEZ).

DATES: The two-day meeting will be held on Tuesday, April 16, 2013 beginning at 12 p.m. and Wednesday, April 17, 2013 beginning at 8:30 a.m.

ADDRESSES: *Meeting address:* The meeting will be held at the Holiday Inn, 31 Hampshire Street, Mansfield, MA 02048; telephone: (508) 339–2200; fax: (508) 339–1040.

Council address: New England Fishery Management Council, 50 Water Street, Mill 2, Newburyport, MA 01950.

FOR FURTHER INFORMATION CONTACT: Paul J. Howard, Executive Director, New England Fishery Management Council; telephone: (978) 465–0492.

SUPPLEMENTARY INFORMATION: The items of discussion in the committee's agenda are as follows:

Tuesday, April 16, 2013, Beginning at 12 p.m.

The Groundfish Oversight Committee will meet to discuss several issues related to the Northeast Multispecies Fishery Management Plan. This will include a report from the Plan Development Team on catch reporting, as well as a progress report on issues related to the relative stock size of Gulf of Maine and Georges Bank haddock. Council staff will report on the feasibility of and progress on data analysis that would inform the development of Amendment 18. The Committee may also discuss recent sector operations plan exemption requests and may discuss a request for an exploration of the impact of climate change on status determination criteria and catch advice. If other business issues are raised, this will occur on the first day of the meeting.

Wednesday, April 17, 2013, Beginning at 8:30 a.m.

The Committee will devote the entire day to considering area management options recommended by the Closed Area Technical Team. These measures are intended to replace existing year round and rolling groundfish closures. Following review at the April Council meeting, these groundfish area management options would be consolidated with the habitat management options being proposed by the Habitat Oversight Committee and included as alternatives in Omnibus Habitat Amendment 2.

Although non-emergency issues not contained in this agenda may come before this group for discussion, those issues may not be the subject of formal action during this meeting. Action will be restricted to those issues specifically identified in this notice and any issues arising after publication of this notice that require emergency action under section 305(c) of the Magnuson-Stevens Fishery Conservation and Management Act, provided the public has been notified of the Council's intent to take final action to address the emergency.

Special Accommodations

This meeting is physically accessible to people with disabilities. Requests for sign language interpretation or other auxiliary aids should be directed to Paul J. Howard (see **ADDRESSES**) at least 5 days prior to the meeting date.

Authority: 16 U.S.C. 1801 *et seq.*

Dated: March 25, 2013.

Tracey L. Thompson,

Acting Deputy Director, Office of Sustainable Fisheries, National Marine Fisheries Service.

[FR Doc. 2013–07187 Filed 3–27–13; 8:45 am]

BILLING CODE 3510–22–P

DEPARTMENT OF COMMERCE

National Oceanic and Atmospheric Administration

RIN 0648–XC592

Endangered and Threatened Species; Take of Anadromous Fish

AGENCY: National Marine Fisheries Service (NMFS), National Oceanic and Atmospheric Administration (NOAA), Commerce.

ACTION: Receipt of three permit applications for scientific research and enhancement.

SUMMARY: Notice is hereby given that NMFS has received three scientific research and enhancement permit applications relating to anadromous species listed under the Endangered Species Act (ESA). The proposed research activities are intended to increase knowledge of the species and to help guide management and conservation efforts. These documents are also available upon written request or by appointment by contacting NMFS by phone (916) 930–3706 or fax (916) 930–3629.

DATES: Written comments on the permit applications or modification request must be received at the appropriate address or fax number (see **ADDRESSES**) no later than 5 p.m. Pacific standard time on April 29, 2013.

ADDRESSES: The applications and related documents may be viewed online at: *https://apps.nmfs.noaa.gov/preview/preview_open_for_comment.cfm.* Written comments on the applications or modification request should be submitted to the Protected Resources Division, NMFS, 650 Capitol Mall, Room 5–100, Sacramento, CA 95814. Comments may also be submitted via fax to (916) 930–3629 or by email to *FRNpermits.sac@noaa.gov.*

FOR FURTHER INFORMATION CONTACT: Amanda Cranford, Sacramento, CA (ph.: 916–930–3706, email.: *Amanda.Cranford@noaa.gov*).

SUPPLEMENTARY INFORMATION:

Species Covered in This Notice

This notice is relevant to federally threatened California Central Valley steelhead (*Oncorhynchus mykiss*), threatened Central Valley spring-run Chinook salmon (*O. tshawytscha*), endangered Sacramento River winter-run Chinook salmon (*O. tshawytscha*), and the threatened southern distinct population segment of North American (SDPS) green sturgeon (*Acipenser medirostris*).

Authority

Scientific research permits are issued in accordance with section 10(a)(1)(A) of the ESA of 1973 (16 U.S.C. 1531–1543) and regulations governing listed fish and wildlife permits (50 CFR parts 222–226). NMFS issues permits based on findings that such permits: (1) Are applied for in good faith; (2) if granted and exercised, would not operate to the disadvantage of the listed species which are the subject of the permits; and (3) are consistent with the purposes and policies set forth in section 2 of the ESA. The authority to take listed species is subject to conditions set forth in the permits.

Anyone requesting a hearing on the permit applications listed in this notice should set out the specific reasons why a hearing on the application(s) would be appropriate (see **ADDRESSES**). Such hearings are held at the discretion of the Assistant Administrator for Fisheries, NMFS.

Applications Received

Permit 17551

The California Department of Fish and Wildlife, Region II (CDFW) is requesting a 5-year scientific research and enhancement permit to take juvenile SDPS green sturgeon associated with research activities in the Central Valley, California. Incidental mortality of SDPS green sturgeon is not expected to occur and therefore none is requested for Permit 17551. The overall goal of this project is to increase knowledge with regards to the behavior of young of the year and yearling SDPS green sturgeon from the Sacramento River and their presumed nursery grounds of the Sacramento-San Joaquin Delta and subsequently the ocean staging habitat of San Francisco Bay. There is virtually no information on size, age, or potential environmental cues contributing to movements to and between these two unique habitats. Information on timing, survival, and transition rates through the bay and Delta region are necessary for understanding potential risks to juvenile green sturgeon. The study proposed for Permit 17551 will be a collaborative effort between the University of California Davis Biotelemetry Laboratory and CDFW. Objectives are to: (1) Develop capture methods for monitoring of juvenile green and white sturgeon in the lower Sacramento River and Sacramento-San Joaquin Delta, (2) describe spatial and temporal movements during emigration from the lower Sacramento River to the tidally influenced reaches of the upper Delta, (3) assess the seasonal migration and survival through engineered flood plains (Yolo Bypass) and (4) describe spatial and temporal use of the Sacramento-San Joaquin Delta and behavior and emigration timing to San Francisco Bay. CDFW is proposing to capture (tangle nets, modified fyke nets), measure, weigh and acoustically tag up to 100 juvenile green sturgeon per year.

Permit 17918

FISHBIO Environmental is requesting a 5-year scientific research and enhancement permit to take adult and juvenile CCV steelhead, associated with research activities in the Tuolumne River from the Hickman Bridge (river mile [RM] 31.5) downstream to the confluence with the San Joaquin River (RM 0), in the Central Valley of California. Specific information obtained by this study will update and supplement information from prior studies in order to: (1) Estimate relative abundance of predator fish species such as largemouth bass (*Micropterus salmoides*), smallmouth bass (*M. dolomieu*), Sacramento pikeminnow (*Ptychocheilus grandis*), and striped bass (*Morone saxatilis*), (2) update estimates of predation rate from previous surveys. Incidental mortality of CCV steelhead is not expected to occur and therefore none is requested for Permit 17918.

Predator Abundance will be estimated using boat electrofishing in select special run-pools, run-pools, and riffles. As the majority of predators in the lower Tuolumne River are non-native and are most abundant downstream of approximately RM 31, predation study sites will be concentrated in this downstream reach. Focusing effort in this reach and conducting sampling during the summer months (July-September) are measures designed to minimize the potential to encounter Chinook salmon and CCV steelhead. Multiple pass electrofishing will be conducted at night when catch per unit effort is typically highest and would be used to target territorial species such as largemouth and smallmouth bass that do not range far from their home territory. Predators captured using electrofishing will be identified to species, measured and weighed, then released near the location of capture.

Predation Rate will be estimated by electrofishing at selected sites during two different timeframes, the first of which will occur February through March and the second April though May. Limiting sampling to locations downstream of RM 31.5 is a measure designed to avoid CCV steelhead spawning which may be occurring in the upstream reach during this timeframe. The predation rate task is designed to collect data on predation rate by fish within specific habitat types during the Chinook salmon rearing and outmigration period. Stomach contents will be examined to determine the rate of predation on juvenile salmon. Approximately twelve study sites will be selected from slow-water habitat locations (pools) and fast-water habitats (primarily runs), which provide preferred habitat for largemouth bass and smallmouth bass, respectively. Two survey events will be conducted, approximately one-month apart during the Chinook salmon outmigration period with the goal of documenting the magnitude of predation on juvenile Chinook salmon. Sampling will be conducted by a boat crew sampling at night, when feeding activity is generally at its peak. The sampling goal for each study site will be to capture 5–10 individuals of each species present for stomach content analysis.

Permit 17913

Stillwater Sciences is requesting a 5-year scientific research and enhancement permit to take adult and juvenile CCV steelhead, associated with research activities in the Tuolumne River between RM 52.5 and RM 0, and on the San Joaquin River between RM 79 (Gardner Cove) and RM 90 (Laird Park), in the Central Valley, California. Permit 17913 is for two studies to be carried out by Stillwater Sciences.

The Tuolumne River fisheries monitoring project will evaluate and measure ESA-listed salmonid and non-listed fish species distribution, population abundance, habitat utilization, and habitat quality in the lower Tuolumne River in Stanislaus County, California. This project will monitor the effects of water diversion facilities maintained by the Turlock and Modesto Irrigation Districts on ESA-listed salmonids and non-listed fish species and the effects of past and ongoing habitat restoration actions to provide information and guide future habitat restoration and management actions within the Tuolumne River watershed. This study includes observational snorkel surveys as well as direct collection and handling of juvenile fall-run Chinook salmon and CCV steelhead using beach seine methods. Any captured juvenile CCV steelhead will be handled (anesthetized and measured for length and weight), placed in an aerated bucket to recover, and released.

The Tuolumne River O. mykiss temperature adaptation assessment project will examine temperature tolerances of juvenile salmonid life

stages that inhabit the lower Tuolumne River. Fish collected for this project may potentially include ESA-listed CCV steelhead. Up to 50 juvenile O. mykiss will be collected from the Tuolumne River during summer months (June-September) of each year using beach seine methods between La Grange powerhouse (RM 52.2) and Roberts Ferry Bridge (RM 39.5). Individual test fish will be placed in Brett swim tubes and tested for physiological performance, measuring both a routine, or resting (minimum) respiratory rate and a swimming (maximum) respiratory rate at a single test temperature. Test fish would be allowed to fully recover prior to release to the lower Tuolumne River.

Dated: March 25, 2013.

Angela Somma,

Chief, Endangered Species Division, Office of Protected Resources, National Marine Fisheries Service.

[FR Doc. 2013–07226 Filed 3–27–13; 8:45 am]

BILLING CODE 3510–22–P

DEPARTMENT OF COMMERCE

National Oceanic and Atmospheric Administration

RIN 0648–XC494

Takes of Marine Mammals Incidental to Specified Activities; Taking Marine Mammals Incidental to an Exploration Drilling Program in the Chukchi Sea, Alaska

AGENCY: National Marine Fisheries Service (NMFS), National Oceanic and Atmospheric Administration (NOAA), Commerce.

ACTION: Notice; proposed incidental harassment authorization; extension of comment period.

SUMMARY: On February 22, 2013, NMFS announced notice of its proposed issuance of an Incidental Harassment Authorization (IHA) to ConocoPhillips Company (COP) to take small numbers of marine mammals, by harassment, incidental to conducting offshore exploration drilling on Outer Continental Shelf (OCS) leases in the Chukchi Sea, Alaska. Written comments were due by March 25, 2013. Under the unique circumstances of the timing of the publication of the **Federal Register** notice relative to several related meetings and other Federal review processes related to this action, NMFS has decided to extend the public comment period by 45 days, to May 9, 2013.

DATES: The public comment period for this action has been extended from March 25 to May 9, 2013. Written comments and information must be received no later than May 9, 2013.

ADDRESSES: Comments on the application should be addressed to Michael Payne, Chief, Permits and Conservation Division, Office of Protected Resources, National Marine Fisheries Service, 1315 East-West Highway, Silver Spring, MD 20910. The mailbox address for providing email comments is *ITP.Nachman@noaa.gov.* NMFS is not responsible for email comments sent to addresses other than the one provided here. Comments sent via email, including all attachments, must not exceed a 25-megabyte file size.

Instructions: All comments received are a part of the public record and will generally be posted to *http://www.nmfs.noaa.gov/pr/permits/incidental.htm* without change. All Personal Identifying Information (for example, name, address, etc.) voluntarily submitted by the commenter may be publicly accessible. Do not submit Confidential Business Information or otherwise sensitive or protected information.

FOR FURTHER INFORMATION CONTACT: Candace Nachman, Office of Protected Resources, NMFS, (301) 427–8401.

SUPPLEMENTARY INFORMATION: On February 22, 2013, NMFS announced notice of its proposed issuance of an IHA to COP to take small numbers of marine mammals, by harassment, incidental to conducting offshore exploration drilling on OCS leases in the Chukchi Sea, Alaska, during the 2014 open-water season (78 FR 12542). NMFS convened its annual Open Water Meeting in Anchorage, Alaska, during the public comment period for this action, thus taking away from review time. Moreover, additional Federal agency reviews and documents are being released during this time. The request for additional time on the comment period noted having the ability to review these documents will aid in the review of this proposed IHA notice. Furthermore, this is the first time NMFS is proposing to issue an IHA in the U.S. Chukchi Sea for exploratory drilling with a jack-up rig. NMFS does not anticipate that the comment period extension will delay its decision of whether to issue an IHA.

NMFS refers the reader to the February 22, 2013, **Federal Register** notice (78 FR 12542) for background information concerning the proposed IHA. The information in the Notice of Proposed IHA is not repeated here. For additional information about the IHA application and associated documents, please visit the Web site at: *http://www.nmfs.noaa.gov/pr/permits/incidental.htm.*

Dated: March 25, 2013.

Helen M. Golde,

Acting Director, Office of Protected Resources, National Marine Fisheries Service.

[FR Doc. 2013–07176 Filed 3–27–13; 8:45 am]

BILLING CODE 3510–22–P

CONSUMER PRODUCT SAFETY COMMISSION

[Docket No. CPSC–2009–0044]

Submission for OMB Review; Comment Request: Safety Standard for Cigarette Lighters

AGENCY: Consumer Product Safety Commission.

ACTION: Notice.

SUMMARY: Pursuant to the Paperwork Reduction Act of 1995 (44 U.S.C. Chapter 35), the Consumer Product Safety Commission (Commission or CPSC) announces that it has submitted to the Office of Management and Budget (OMB) a request for extension of approval of a collection of information associated with the Commission's safety standard for cigarette lighters, 16 CFR part 1210.

DATES: Written comments on this request for extension of approval of information collection requirements should be submitted by April 29, 2013.

ADDRESSES: OMB recommends that written comments on the information collection be faxed to the Office of Information and Regulatory Affairs, OMB, Attn: CPSC Desk Officer, FAX: 202–395–6974, or emailed to *oira_submission@omb.eop.gov*. All comments should be identified by Docket No. CPSC–2009–0044. In addition, written comments also should be submitted at *http://www.regulations.gov,* under Docket No. CPSC–2009–0044, or by mail/hand delivery/courier (for paper, disk, or CD–ROM submissions), preferably in five copies, to: Office of the Secretary, U.S. Consumer Product Safety Commission, Room 820, 4330 East West Highway, Bethesda, MD 20814; telephone (301) 504–7923. For access to the docket to read background documents or comments received, go to *http://www.regulations.gov*.

FOR FURTHER INFORMATION CONTACT: Robert H. Squibb, U.S. Consumer Product Safety Commission, 4330 East West Highway, Bethesda, MD 20814; telephone: 301–504–7923 or by email to *rsquibb@cpsc.gov*.

SUPPLEMENTARY INFORMATION: In the **Federal Register** of January 14, 2013 (78 FR 2662), the CPSC published a notice in accordance with provisions of the Paperwork Reduction Act of 1995 (44 U.S.C. chapter 35) to announce the agency's intention to seek extension of approval of the collection of information required in the Safety Standard for Cigarette Lighters, 16 CFR part 1210. One comment was received in response to that notice. The commenter stated: ''The survey does not have be done every year'' and added that the new cigarette lighters coming into the market cannot be ''any different than the ones that have been manufactured for the past 100 years.'' The testing requirements, as well as the recordkeeping and reporting requirements, are set forth under the standard, 16 CFR part 1210, Subpart B. Before any manufacturer or importer of lighters distributes any lighter in commerce in the United States, new lighters and comparable models of cigarette lighters (called surrogate) must be tested to verify that all such models of lighters are resistant to the operation by children younger than 5 years of age. The burden hours estimates were based on the number of new models (13) and comparable models (132) submitted by manufacturers and importers of lighters to the CPSC in 2012. The Commission announces in this notice that CPSC has submitted to the OMB a request for extension of approval of that collection of information without change.

CPSC staff estimates that the total number of responses will be 145 per year (13 tested + 132 comparisons). The total number of hours consumed for these responses would be 1,826 hours per year, including new model tests (1,170 hours if done in-house), new model recordkeeping (260 hours), and recordkeeping for comparable models (396 hours). The Commission estimates the total cost for firms to test, and prepare, maintain, and submit records to the CPSC in compliance with the lighter regulation would be in the range of $90,379 to $278,132, depending upon the test method chosen.

The estimated total cost of this collection to the federal government is $344,618.

Dated: March 25, 2013.

Todd A. Stevenson,

Secretary, Consumer Product Safety Commission.

[FR Doc. 2013–07167 Filed 3–27–13; 8:45 am]

BILLING CODE 6355–01–P

COURT SERVICES AND OFFENDER SUPERVISION AGENCY FOR THE DISTRICT OF COLUMBIA

Publication of Fiscal Year 2012 Service Contract Inventory

AGENCY: Court Services and Offender Supervision Agency for the District of Columbia.

ACTION: Notice of Public Availability of FY 2012 Service Contract Inventory.

SUMMARY: In accordance with Section 743 of Division C of the FY2010 Consolidated Appropriations Act, the Court Services and Offender Supervision Agency (CSOSA) hereby advises the public of the availability of the FY 2012 Service Contract Inventory. This inventory provides information on service contract actions over $25,000 that were made in FY 2012. The information is organized by function to show how contracted resources are distributed throughout the agency. This inventory has been developed in accordance with guidance issued on November 5, 2010, and December 19, 2011, by the Office of Management and Budget's Office of Federal Procurement Policy. CSOSA's FY 2012 Service Contract Inventory is available on its Web site at: *http://www.csosa.gov/about/mandated-reports.aspx.*

FOR FURTHER INFORMATION CONTACT: Inventory Information: Jim Williams, Associate Director, Office of Management and Administration, Court Services and Offender Supervision Agency, 633 Indiana Avenue NW., Washington, DC 20004, (202) 220–5707, or *jim.williams@csosa.gov.*

Notice Information: Rorey Smith, Deputy General Counsel, Court Services and Offender Supervision Agency, 633 Indiana Avenue NW., Washington, DC 20004, (202) 220–5797, or *rorey.smith@csosa.gov.*

Rorey Smith,

Deputy General Counsel, Office of the General Counsel.

[FR Doc. 2013–07197 Filed 3–27–13; 8:45 am]

BILLING CODE 3129–04–P

DEPARTMENT OF DEFENSE

Department of the Air Force

[Docket ID USAF–2013–0022]

Proposed Collection; Comment Request

AGENCY: Department of Defense/Department of the Air Force/National Museum of the United States Air Force, DoD.

ACTION: Notice.

In compliance with Section 3506(c)(2)(A) of the *Paperwork Reduction Act of 1995,* the Department of the Air Force announces reinstatement of a public information collection and seeks public comment on the provisions thereof. Comments are invited on: (a) Whether the proposed collection of information is necessary for the proper performance of the functions of the agency, including whether the information shall have practical utility; (b) the accuracy of the agency's estimate of the burden of the proposed information collection; (c) ways to enhance the quality, utility, and clarity of the information to be collected; and (d) ways to minimize the burden of the information collection on respondents, including through the use of automated collection techniques or other forms of information technology.

DATES: Consideration will be given to all comments received by May 28, 2013.

ADDRESSES: You may submit comments, identified by docket number and title, by any of the following methods:

- *Federal eRulemaking Portal: http://www.regulations.gov.* Follow the instructions for submitting comments.
- *Mail:* Federal Docket Management System Office, 4800 Mark Center Drive, East Tower, Suite 02G09, Alexandria, VA 22350–3100.

Instructions: All submissions received must include the agency name, docket number and title for this **Federal Register** document. The general policy for comments and other submissions from members of the public is to make these submissions available for public viewing on the Internet at *http://www.regulations.gov* as they are received without change, including any personal identifiers or contact information.

FOR FURTHER INFORMATION CONTACT: To request more information on this proposed information collection or to obtain a copy of the proposal and associated collection instruments, please write to: The National Museum of the United States Air Force, 1100 Spaatz St., Wright-Patterson Air Force Base, OH 45433–7102, or call the Museum Volunteer Program Office at 937–255–3495.

Title; Associated Form; and OMB Number: USAF Heritage Program Volunteer Application/Registration, AF IMT 3569, V1; OMB Control Number 0701–0127.

Needs and Uses: The information collection requirement is necessary to provide (a) the general public an instrument to interface with the USAF

Heritage Program Volunteer Program; (b) the USAF Heritage Program the means with which to select respondents pursuant to the USAF Heritage Program Volunteer Program. The primary use of the information collection includes the evaluation and placement of respondents within the USAF Heritage Program Volunteer Program.

Affected Public: Business or other for profit; Not-for-profit Institutions.

Annual Burden Hours: 49.5.

Number of Respondents: 198.

Responses per Respondent: 1.

Average Burden per Response: 15 minutes.

Frequency: On occasion.

SUPPLEMENTARY INFORMATION:

Summary of Information Collection

Respondents are individuals expressing an interest in participating in the USAF Heritage Program Volunteer Program authorized by 10 U.S.C. 81, Sec 1588 and regulated by the Air Force Instruction 84–103. AFI 84–103, 3.5.3. requires the use of AF Form 3569. AF Form 3569 provides the most expedient means to secure basic personal information (*i.e.,* name, telephone number, address and experience pursuant to the USAF Heritage Program Volunteer Program requirements) to be employed solely by the USAF Heritage Volunteer Program and to recruit, evaluate and make work assignment decisions. AF Form 3569 is the only instrument that exists which facilitates this purpose. The NMUSAF Museum Volunteer Program is an integral function in the operation of the USAF Heritage Program. Volunteers provide valuable time, incalculable talent, skill, and knowledge of USAF aviation history so that all visitors to the many USAF Heritage Program facilities throughout the United States may enjoy the important contribution of USAF historical heritage.

Dated: March 22, 2013.

Aaron Siegel,

Alternate OSD Federal Liaison Officer, Department of Defense.

[FR Doc. 2013–07170 Filed 3–27–13; 8:45 am]

BILLING CODE 5001–06–P

DEPARTMENT OF DEFENSE

Department of the Navy

Meeting of the Secretary of the Navy Advisory Panel

AGENCY: Department of the Navy, DoD.

ACTION: Notice of Closed Meeting.

SUMMARY: The SECNAV Advisory Panel will meet from 8:30 a.m. to 4:00 p.m. on April 18, 2013 for a series of classified discussions on the Asia-Pacific region to include the international strategic environment and ongoing Department of the Navy efforts. These sessions will include discussions of classified material. For this reason, the meeting will be closed to the public.

DATES: The meeting will be held on April 18, 2013, from 8:30 a.m. to 4:00 p.m.

ADDRESSES: The meeting will be held in the Pentagon 4B248A Conference Room at the Pentagon.

FOR FURTHER INFORMATION CONTACT: CAPT Peter J. Brennan, SECNAV Advisory Panel, Office of the Deputy Under Secretary of the Navy (Plans, Policy, Oversight & Integration), 1000 Navy Pentagon, Washington, DC 20350–1000, 703–695–3032.

SUPPLEMENTARY INFORMATION: Pursuant to the provisions of the Federal Advisory Committee Act (5 U.S.C. App. 2), these matters constitute classified information that is specifically authorized by Executive Order to be kept secret in the interest of national defense and are, in fact, properly classified pursuant to such Executive Order. The discussion of such information cannot be adequately segregated from other topics, which precludes opening these meetings to the public. Accordingly, the Secretary of the Navy has determined in writing that the public interest requires that all sessions of this meeting be closed to the public because they will be concerned with matters listed in section 552b(c)(1) of title 5, United States Code.

Dated: March 20, 2013.

C. K. Chiappetta,

Lieutenant Commander, Office of the Judge Advocate General, U.S. Navy, Federal Register Liaison Officer.

[FR Doc. 2013–07219 Filed 3–27–13; 8:45 am]

BILLING CODE 3810–FF–P

DEPARTMENT OF ENERGY

Bonneville Power Administration

Walla Walla Basin Spring Chinook Hatchery Program

AGENCY: Bonneville Power Administration (BPA), Department of Energy (DOE).

ACTION: Notice of intent to prepare an Environmental Impact Statement (EIS) and notice of floodplain and wetlands assessment.

SUMMARY: In accordance with the National Environmental Policy Act (NEPA), BPA intends to prepare an EIS on its decision whether to fund the Confederated Tribes of the Umatilla Indian Reservation's (CTUIR) proposal to construct and operate a hatchery for spring Chinook salmon in the Walla Walla River basin. The hatchery would expand facilities at the site of the CTUIR's existing Adult Holding and Spawning Facility on the South Fork Walla Walla River near the town of Milton-Freewater in Umatilla County, Oregon, to allow production of up to 500,000 yearling spring Chinook smolts. Project operations would include collection of adult spring Chinook for broodstock at Nursery Bridge Dam downstream of the proposed hatchery, incubation and rearing of juvenile spring Chinook, and release of smolts and adults in tributaries to the Walla Walla River in both Oregon and Washington. Spring Chinook were extirpated from the Walla Walla River basin in the early to mid-1900s. The proposal would augment fish populations available for harvest and aid in establishing a naturally spawning spring Chinook population.

With this Notice of Intent, BPA is initiating the public scoping process for the EIS. BPA is requesting comments about potential environmental impacts that it should consider as it prepares the EIS.

In accordance with DOE regulations for compliance with floodplain and wetlands environmental review requirements, BPA will prepare a floodplain and wetlands assessment to avoid or minimize potential harm to or within any affected floodplains and wetlands. The assessment will be included in the EIS.

DATES: Written scoping comments are due to the address below no later than April 29, 2013. Comments may also be made at the EIS scoping meetings to be held on Tuesday, April 16, 2013, from 6 p.m. to 8 p.m. at the Milton-Freewater Community Building, 109 NE. 5th, Milton-Freewater, Oregon 97862; and on Wednesday, April 17, 2013, from 6 p.m. to 8 p.m. at the Dayton Elementary School, 302 E. Park, Dayton, Washington 99328. At these meetings, maps and other information about the project will be available, and members of the project team will give a brief overview of the proposal, answer questions, and accept oral and written comments.

Send letters with comments and suggestions on the proposed scope of the Draft EIS, and requests to be placed on the project mailing list, to Bonneville Power Administration, Public Affairs Office—DKE–7, P.O. Box 14428, Portland, OR, 97293–4428, or by fax to

503–230–4019. You also may call BPA's toll-free comment line at 1–800–622–4519 and leave a message (please include the name of this project), or submit comments online at *www.bpa.gov/comment.* BPA will post all comment letters on BPA's Web site at *www.bpa.gov/comment.*

FOR FURTHER INFORMATION CONTACT: Brenda Aguirre, Environmental Coordinator, Bonneville Power Administration—KEC–4, P.O. Box 3621, Portland, Oregon 97208–3621; toll-free telephone 1–800–282–3713; direct telephone 503–230–5928; or email *baguirre@bpa.gov.* You may also contact Jay Marcotte, Project Manager, Bonneville Power Administration—KEWU–3, P.O. Box 3621, Portland, Oregon, 97208–3621; toll-free telephone 1–800–282–3713; direct telephone 503–230–3943; or email *jgmarcotte@bpa.gov.* Additional information can be found at the project Web site: *www.bpa.gov/goto/WallaWallaHatchery*.

SUPPLEMENTARY INFORMATION: Under the Pacific Northwest Electric Power Planning and Conservation Act of 1980 (Northwest Power Act), BPA has a duty to support efforts to mitigate for effects of the Federal Columbia River Power System on fish and wildlife in the mainstem Columbia River and its tributaries. In addition to its responsibilities under the Northwest Power Act, on May 2, 2008, BPA, the Bureau of Reclamation, and the U.S. Army Corps of Engineers signed the 2008 Columbia Basin Fish Accords Memorandum of Agreement with the Three Treaty Tribes. The three tribes are the CTUIR, the Confederated Tribes and Bands of the Yakama Nation, and the Confederated Tribes of Warm Springs Reservation. The agreement includes funding for the CTUIR's Walla Walla Basin Spring Chinook Hatchery Program, subject to compliance with NEPA and other environmental review requirements.

Over the past several years, the CTUIR has worked with irrigation districts and various agencies to improve stream flow and fish habitat in the Walla Walla basin. The hatchery is proposed in order to begin a comprehensive program to reintroduce spring Chinook to this basin. The proposed program would develop a locally adapted broodstock of spring Chinook and release sufficient numbers of spring Chinook smolts in areas where they would be expected to return as adults to provide harvest and to spawn naturally. Potential additional harvest and natural production would also be encouraged by planting adults in tributaries to the Walla Walla River, such as Touchet River and Mill Creek.

The proposal would include construction activities at two existing sites; the South Fork of the Walla Walla near the town of Milton-Freewater, and the Nursery Bridge Dam trap, downstream from the site. At the South Fork Walla Walla Adult Holding and Spawning Facility, activities would include construction of the following: a 13,300 square foot hatchery building (for administrative offices, incubation and rearing, and water treatment); sixteen outdoor rearing raceways; a smolt release channel; a shop building (for vehicle, equipment, and feed storage); a septic system; and a new well (to improve water temperatures and water quality from existing water sources). In addition, an existing river intake would be modified, and existing sub-standard residences would be removed and replaced by up to four new staff residences.

At the Nursery Bridge Dam trap, improvements would be made to the fishway for trapping adult fish.

The proposal would also include the following operational activities: collection of approximately 350 adult spring Chinook annually at the Nursery Bridge Dam fishway for broodstock while still allowing up to 1,100 adults annually to pass the trap and return to key upriver habitat to spawn naturally; release of up to 500,000 spring Chinook smolts annually in the Walla Walla River basin; annual distribution of adults in excess of broodstock and natural spawning needs in Walla Walla River tributaries; and a monitoring and evaluation program.

In the EIS, BPA is considering two alternatives: funding CTUIR's proposal and a no action alternative of not funding the proposal.

Public Participation and Identification of Environmental Issues. The potential environmental issues identified so far for this project include effects of hatchery operations on water quality; the risk of competition for habitat between increasing numbers of reintroduced spring Chinook and ESA-listed fish such as bull trout or steelhead; the potential for adult spring Chinook collection activities to affect other fish; and the social, cultural, and economic effects of project construction and operations, as well as harvest.

BPA has established a 30-day scoping period during which tribes, affected landowners, concerned citizens, special interest groups, local and federal governments, and any other interested parties are invited to comment on the scope of the proposed EIS, including environmental impacts to be evaluated. Scoping will help BPA ensure that the full range of issues related to this proposal are addressed in the EIS. Scoping also will identify significant or potentially significant impacts that may result from the proposed project. When completed, the Draft EIS will be circulated for review and comment, and BPA will hold public meetings to answer questions and receive comments. BPA will consider and respond to comments received on the Draft EIS in the Final EIS. BPA's decision will be documented in a Record of Decision that will follow the Final EIS.

Issued in Portland, Oregon on March 20, 2013.

William K. Drummond,

Administrator and Chief Executive Officer.

[FR Doc. 2013–07248 Filed 3–27–13; 8:45 am]

BILLING CODE 6450–01–P

DEPARTMENT OF ENERGY

Federal Energy Regulatory Commission

[Docket No. CP13–97–000]

Natural Gas Pipeline Company of America LLC; Notice of Application

Take notice that on March 8, 2013, Natural Gas Pipeline Company of America LLC (Natural), 3250 Lacey Road, 7th Floor, Downers Grove, Illinois 60515–7918, filed an application pursuant to section 7(c) of the Natural Gas Act and part 157 of the Commission's regulations to increase the maximum inventory of its Cooks Mill gas storage field from 6.5 billion cubic feet (Bcf) to 6.75 Bcf which is located in Douglas and Coles Counties Illinois, all as more fully set forth in the application which is on file with the Commission and open to public inspection. The filing may also be viewed on the Web at *http://www.ferc.gov* using the ''eLibrary'' link. Enter the docket number excluding the last three digits in the docket number field to access the document. For assistance, contact FERC at *FERCOnlineSupport@ferc.gov* or call toll-free, (866) 208–3676 or TTY, (202) 502–8659.

Any questions regarding this application should be directed to Bruce H. Newsome, Vice President, Natural Gas Pipeline Company of America LLC, 3250 Lacey Road, 7th Floor, Downers Grove, Illinois 60515–7918, or call (630) 725–3070, or by email *bruce_newsome@kindermorgan.com.*

Pursuant to section 157.9 of the Commission's rules, 18 CFR 157.9, within 90 days of this Notice the Commission staff will either: complete

its environmental assessment (EA) and place it into the Commission's public record (eLibrary) for this proceeding; or issue a Notice of Schedule for Environmental Review. If a Notice of Schedule for Environmental Review is issued, it will indicate, among other milestones, the anticipated date for the Commission staff's issuance of the final environmental impact statement (FEIS) or EA for this proposal. The filing of the EA in the Commission's public record for this proceeding or the issuance of a Notice of Schedule for Environmental Review will serve to notify federal and state agencies of the timing for the completion of all necessary reviews, and the subsequent need to complete all federal authorizations within 90 days of the date of issuance of the Commission staff's FEIS or EA.

There are two ways to become involved in the Commission's review of this project. First, any person wishing to obtain legal status by becoming a party to the proceedings for this project should, on or before the comment date stated below file with the Federal Energy Regulatory Commission, 888 First Street NE., Washington, DC 20426, a motion to intervene in accordance with the requirements of the Commission's Rules of Practice and Procedure (18 CFR 385.214 or 385.211) and the Regulations under the NGA (18 CFR 157.10). A person obtaining party status will be placed on the service list maintained by the Secretary of the Commission and will receive copies of all documents filed by the applicant and by all other parties. A party must submit 7 copies of filings made in the proceeding with the Commission and must mail a copy to the applicant and to every other party. Only parties to the proceeding can ask for court review of Commission orders in the proceeding.

However, a person does not have to intervene in order to have comments considered. The second way to participate is by filing with the Secretary of the Commission, as soon as possible, an original and two copies of comments in support of or in opposition to this project. The Commission will consider these comments in determining the appropriate action to be taken, but the filing of a comment alone will not serve to make the filer a party to the proceeding. The Commission's rules require that persons filing comments in opposition to the project provide copies of their protests only to the party or parties directly involved in the protest.

Persons who wish to comment only on the environmental review of this project should submit an original and two copies of their comments to the Secretary of the Commission. Environmental commentors will be placed on the Commission's environmental mailing list, will receive copies of the environmental documents, and will be notified of meetings associated with the Commission's environmental review process. Environmental commentors will not be required to serve copies of filed documents on all other parties. However, the non-party commentors will not receive copies of all documents filed by other parties or issued by the Commission (except for the mailing of environmental documents issued by the Commission) and will not have the right to seek court review of the Commission's final order.

The Commission strongly encourages electronic filings of comments, protests and interventions in lieu of paper using the ''eFiling'' link at *http://www.ferc.gov.* Persons unable to file electronically should submit an original and 5 copies of the protest or intervention to the Federal Energy regulatory Commission, 888 First Street NE., Washington, DC 20426.

Comment Date: April 11, 2013.

Dated: March 21, 2013.

Kimberly D. Bose,

Secretary.

[FR Doc. 2013–07081 Filed 3–27–13; 8:45 am]

BILLING CODE 6717–01–P

DEPARTMENT OF ENERGY

Federal Energy Regulatory Commission

Combined Notice of Filings

Take notice that the Commission has received the following Natural Gas Pipeline Rate and Refund Report filings:

Filings Instituting Proceedings

Docket Numbers: RP13–692–000.
Applicants: Natural Gas Pipeline Company of America.
Description: Negotiated Rate—Tenaska LPS–RO to be effective 4/1/2013.
Filed Date: 3/19/13.
Accession Number: 20130319–5086.
Comments Due: 5 p.m. ET 4/1/13.

Docket Numbers: RP13–693–000.
Applicants: Northern Border Pipeline Company.
Description: Compressor Usage Surcharge 2013 to be effective 5/1/2013.
Filed Date: 3/20/13.
Accession Number: 20130320–5031.
Comments Due: 5 p.m. ET 4/1/13.

Docket Numbers: RP13–694–000.
Applicants: Horizon Pipeline Company, L.L.C.
Description: Penalty Revenue Crediting Report of Horizon Pipeline Company, L.L.C.
Filed Date: 3/20/13.
Accession Number: 20130320–5049.
Comments Due: 5 p.m. ET 4/1/13.

Docket Numbers: RP13–695–000.
Applicants: CenterPoint Energy Gas Transmission Comp.
Description: CEGT LLC—Revenue Crediting effective May 1, 2013 to be effective 5/1/2013.
Filed Date: 3/20/13.
Accession Number: 20130320–5070.
Comments Due: 5 p.m. ET 4/1/13.

Docket Numbers: RP13–696–000.
Applicants: East Tennessee Natural Gas, LLC, Murray I and II LLC, Oglethorpe Power Corporation.
Description: East Tennessee Natural Gas, LLC, et al. submits Joint Petition for Temporary Waivers, et al.
Filed Date: 3/20/13.
Accession Number: 20130320–5093.
Comments Due: 5 p.m. ET 3/26/13.

Any person desiring to intervene or protest in any of the above proceedings must file in accordance with Rules 211 and 214 of the Commission's Regulations (18 CFR 385.211 and 385.214) on or before 5:00 p.m. Eastern time on the specified comment date. Protests may be considered, but intervention is necessary to become a party to the proceeding.

Filings in Existing Proceedings

Docket Numbers: RP13–527–001.
Applicants: Boardwalk Storage Company, LLC.
Description: Correction Compliance Filing to be effective 3/3/2013.
Filed Date: 3/20/13.
Accession Number: 20130320–5074.
Comments Due: 5 p.m. ET 3/27/13.

Docket Numbers: RP13–683–001.
Applicants: Columbia Gulf Transmission, LLC.
Description: Non-Conforming Remediation Errata to be effective 4/15/2013.
Filed Date: 3/20/13.
Accession Number: 20130320–5089.
Comments Due: 5 p.m. ET 4/1/13.

Any person desiring to protest in any the above proceedings must file in accordance with Rule 211 of the Commission's Regulations (18 CFR 385.211) on or before 5:00 p.m. Eastern time on the specified comment date.

The filings are accessible in the Commission's eLibrary system by clicking on the links or querying the docket number.

eFiling is encouraged. More detailed information relating to filing requirements, interventions, protests, and service can be found at: *http://*

www.ferc.gov/docs-filing/efiling/filing-req.pdf. For other information, call (866) 208–3676 (toll free). For TTY, call (202) 502–8659.

Dated: March 21, 2013.

Nathaniel J. Davis, Sr.,

Deputy Secretary.

[FR Doc. 2013–07218 Filed 3–27–13; 8:45 am]

BILLING CODE 6717–01–P

DEPARTMENT OF ENERGY

Federal Energy Regulatory Commission

[Docket No. PF12–8–000]

Trunkline LNG Company, LLC; Trunkline LNG Export, LLC; Trunkline Gas Company, LLC; Supplemental Notice of Intent To Prepare an Environmental Impact Statement for the Planned Lake Charles Liquefaction Project and Request for Comments on Environmental Issues

As previously noticed on September 14, 2012, and supplemented herein, the staff of the Federal Energy Regulatory Commission (FERC or Commission) will prepare an environmental impact statement (EIS) that will discuss the environmental impacts of the Lake Charles Liquefaction Project involving construction and operation of facilities by Trunkline LNG Company, LLC; Trunkline LNG Export, LLC; and Trunkline Gas Company, LLC (collectively referred to as Trunkline) in Louisiana and Mississippi. The Commission will use this EIS in its decision-making process to determine whether the project is in the public convenience and necessity.

This Supplemental Notice of Intent (NOI) announces the opening of a second scoping period the Commission will use to gather input from the public and interested agencies on additional pipeline, compression, and metering facilities planned by Trunkline, which will be included in the EIS. Your input will help determine what issues need to be evaluated in the EIS. Please note that the scoping period will close on April 22, 2013.

This notice is being sent to the Commission's current environmental mailing list for this project, including the newly affected landowners along the pipeline routes or near the aboveground facilities. State and local government representatives should notify their constituents of this planned project and encourage them to comment on their areas of concern.

If you are a landowner receiving this notice, you may be contacted by a pipeline company representative about the acquisition of an easement to construct, operate, and maintain the proposed facilities. The company would seek to negotiate a mutually acceptable agreement. However, if the project is approved by the Commission, that approval conveys with it the right of eminent domain. Therefore, if easement negotiations fail to produce an agreement, the pipeline company could initiate condemnation proceedings in accordance with state law.

A fact sheet prepared by the FERC entitled ''An Interstate Natural Gas Facility On My Land? What Do I Need To Know?'' is available for viewing on the FERC Web site (*www.ferc.gov*). This fact sheet addresses a number of typically asked questions, including the use of eminent domain and how to participate in the Commission's proceedings.

Summary of the Planned Project

As previously noticed, Trunkline plans to expand its existing liquefied natural gas (LNG) terminal in Calcasieu Parish, Louisiana to liquefy natural gas and export the LNG. The planned facility would be capable of processing approximately 2.4 billion cubic feet per day of natural gas, and exporting approximately 15 million metric tons of LNG per year. In addition, in January 2013, Trunkline expanded its project to include plans to construct and modify certain pipeline facilities to supply natural gas to the liquefaction facility.

The Lake Charles Liquefaction Project would consist of the following:

- LNG facilities in Calcasieu Parish, Louisiana, include:
  - a new liquefaction facility including three liquefaction trains (each train contains metering and gas treatment facilities, liquefaction and refrigerant units, safety and control systems, and associated infrastructure);
  - modifications and upgrades at the existing LNG terminal; and
  - about 0.5 mile of 48-inch-diameter feed gas line in Calcasieu Parish, Louisiana to supply natural gas to the liquefaction facility from existing gas transmission pipelines.
- Pipeline facilities now included as part of the project, include:
  - an 11.6-mile-long, 36-inch-diameter greenfield natural gas pipeline (Mainline Connector) in Jefferson Davis and Calcasieu Parishes, Louisiana;
  - a 6.5-mile-long, 24-inch-diameter natural gas pipeline loop [1] (Mainline 200–3 Loop Line) in Jefferson Davis and Calcasieu Parishes, Louisiana; and
  - ancillary facilities associated with the pipeline.
- Compression and metering facilities now included as part of the project, include:
  - a new 59,840-horsepower (hp) compressor station (Compressor Station 203–A) in Calcasieu Parish, Louisiana;
  - modifications to the existing Longville Compressor Station in Beauregard Parish, Louisiana, involving retirement of an existing 3,000-hp unit and installation of a new 15,000-hp unit, as well as piping modifications to make the station bi-directional;
  - piping modifications at the existing Pollock, Epps, and Shaw Compressor Stations in Grant and West Carroll Parishes, Louisiana and Bolivar County, Mississippi, respectively, to make the stations bi-directional;
  - four new meter stations in Calcasieu, Acadia, and Richland (2) Parishes, Louisiana; and
  - modifications to six existing meter stations in Calcasieu, Jefferson Davis (2), Cameron, and Beauregard (2) Parishes, Louisiana to make the stations bi-directional.

Trunkline plans to initiate construction of the planned liquefaction facilities in August 2014, and construction of the pipelines, compressor stations, and metering facilities are planned to take place in the second and third quarters of 2017. Trunkline plans to commence operation of the planned facilities in August 2018. The general location of the project facilities is shown in appendices 1 and 2.[2]

Land Requirements for Construction

The planned liquefaction facilities would be constructed on a 268-acre site that is largely undeveloped and located immediately north of and adjacent to the existing LNG terminal. The majority of the site would be required for both construction and operation of the facility. An additional 200-acre area, at a location yet to be determined, would be required during construction of the liquefaction facilities for materials storage and contractor facilities. Modifications to take place at the

[1] A pipeline ''loop'' is a segment of pipeline that is installed adjacent to or in the vicinity of an existing pipeline and connected to the existing pipeline at both ends. A loop increases the volume of gas that can be transported through that portion of the system.

[2] The appendices referenced in this notice will not appear in the **Federal Register**. Copies of the appendices were sent to all those receiving this notice in the mail and are available at *www.ferc.gov* using the link called ''eLibrary'' or from the Commission's Public Reference Room, 888 First Street NE., Washington, DC 20426, or call (202) 502–8371. For instructions on connecting to eLibrary, refer to the last page of this notice.

existing LNG terminal would occur within the existing terminal boundaries.

Construction of the 0.5-mile-long gas feed line would occur within the LNG facility sites. Construction of the Mainline Connector and Mainline 200–3 Loop Line would disturb about 223 acres of land. Following construction, about 106 acres would be maintained for permanent operation of the pipelines. Approximately 60.0 acres of land would be disturbed to construct the new Compressor Station 203–A, including about 10 acres to be used temporarily during construction and about 50 acres to be retained for permanent operation of the facility. Modifications to be made at the existing compressor stations would take place within the existing facility sites. Construction and operation of the four new meter stations would affect about 4.0 acres of land (1.0 acre for each meter station). The modifications at the six existing meter stations would disturb a total of about 9.0 acres during construction. Following construction, operation of the modified meter stations would not require additional permanent easements. The existing meter station modification in Cameron Parish would, however, require an additional 1.1-acre permanent impact for operation.

The EIS Process

The National Environmental Policy Act (NEPA) requires the Commission to take into account the environmental impacts that could result from an action whenever it considers the issuance of a Certificate of Public Convenience and Necessity. NEPA also requires us [3] to discover and address concerns the public may have about proposals. This process is referred to as scoping. The main goal of the scoping process is to focus the analysis in the EIS on the important environmental issues. By this notice, the Commission requests public comments on the scope of the issues to address in the EIS. We will consider all filed comments during the preparation of the EIS.

In the EIS we will discuss impacts that could occur as a result of the construction and operation of the planned project under these general headings:

- geology and soils;
- land use;
- water resources and wetlands;
- cultural resources;
- vegetation, fisheries, and wildlife;
- socioeconomics;
- air quality and noise;
- endangered and threatened species; and
- public safety.

We will also evaluate possible alternatives to the planned project or portions of the project, and make recommendations on how to lessen or avoid impacts on the various resource areas.

Although no formal application has been filed, we have already initiated our NEPA review under the Commission's pre-filing process. The purpose of the pre-filing process is to encourage early involvement of interested stakeholders and to identify and resolve issues before the FERC receives an application. As part of our pre-filing review, we have begun to contact federal and state agencies to discuss their involvement in the scoping process and the preparation of the EIS. In addition, representatives from the FERC participated in the public open houses sponsored by Trunkline in Lake Charles, Louisiana on July 19, 2012; Iowa, Louisiana on February 4, 2013; and Jennings, Louisiana on February 5, 2013, to explain the environmental review process to interested stakeholders. On October 3, 2012, the FERC held a public scoping meeting in Sulphur, Louisiana, to solicit comments regarding the planned liquefaction facility.

The EIS will present our independent analysis of the issues. We will publish and distribute the draft EIS for public comment. After the comment period, we will consider all timely comments and revise the document, as necessary, before issuing a final EIS. To ensure we have the opportunity to consider and address your comments, please carefully follow the instructions in the Public Participation section beginning on page 6.

With this notice, we are asking agencies with jurisdiction by law and/or special expertise with respect to the environmental issues related to this project to formally cooperate with us in the preparation of the EIS.[4] Agencies that would like to request cooperating agency status should follow the instructions for filing comments provided under the Public Participation section of this notice. Currently, the U.S. Department of Energy, the U.S. Fish and Wildlife Service, the U.S. Army Corps of Engineers, and the U.S. Department of Transportation have expressed their intention to participate as a cooperating agency in the preparation of the EIS to satisfy their NEPA responsibilities related to this project.

Consultations Under Section 106 of the National Historic Preservation Act

In accordance with the Advisory Council on Historic Preservation's implementing regulations for section 106 of the National Historic Preservation Act, we are using this notice to initiate consultation with the Louisiana State Historic Preservation Office and the Mississippi Department of Archives and History (SHPOs), and to solicit their views and those of other government agencies, interested Indian tribes, and the public on the project's potential effects on historic properties.[5] We will define the project-specific Area of Potential Effects (APE) in consultation with the SHPOs as the project develops. On natural gas facility projects, the APE at a minimum encompasses all areas subject to ground disturbance (examples include construction right-of-way, contractor/pipe storage yards, compressor stations, and access roads). Our EIS for this project will document our findings on the impacts on historic properties and summarize the status of consultations under section 106.

Currently Identified Environmental Issues

We have already identified several issues that we think deserve attention based on a preliminary review of the planned facilities and the environmental information provided by Trunkline. This preliminary list of issues may change based on your comments and our analysis. Issued identified include:

- potential effects of construction workforce on local housing, infrastructure, public services, and economy;
- potential impacts on recreational fishing and aquatic resources in the Calcasieu Ship Channel;
- potential impacts on wetland and waterbody resources at facility locations;
- potential impacts on residences in the vicinity of the pipelines;
- potential impacts on agricultural lands crossed by the pipelines;
- potential visual effects on surrounding areas;
- potential noise impacts in the vicinity of the new compressor station; and

[3] "We," "us," and "our" refer to the environmental staff of the Commission's Office of Energy Projects.

[4] The Council on Environmental Quality regulations addressing cooperating agency responsibilities are at Title 40, Code of Federal Regulations, Part 1501.6.

[5] The Advisory Council on Historic Preservation regulations are at Title 36, Code of Federal Regulations, Part 800. Those regulations define historic properties as any prehistoric or historic district, site, building, structure, or object included in or eligible for inclusion in the National Register for Historic Places.

• public safety and hazards associated with the transport of natural gas and LNG.

Public Participation

You can make a difference by providing us with your specific comments or concerns about the project. Your comments should focus on the potential environmental effects, reasonable alternatives, and measures to avoid or lessen environmental impacts. The more specific your comments, the more useful they will be. To ensure that your comments are timely and properly recorded, please send your comments so that the Commission receives them in Washington, DC on or before April 22, 2013. This is not your only public input opportunity; please refer to the Environmental Review Process flowchart in appendix 3.

For your convenience, there are three methods you can use to submit your comments to the Commission. In all instances, please reference the project docket number (PF12–8–000) with your submission. The Commission encourages electronic filing of comments and has expert staff available to assist you at (202) 502–8258 or *efiling@ferc.gov.*

(1) You can file your comments electronically using the *eComment* feature located on the Commission's Web site (*www.ferc.gov*) under the link to *Documents and Filings.* This is an easy method for interested persons to submit brief, text-only comments on a project;

(2) You can file your comments electronically using the *eFiling* feature located on the Commission's Web site (*www.ferc.gov*) under the link to *Documents and Filings.* With eFiling, you can provide comments in a variety of formats by attaching them as a file with your submission. New eFiling users must first create an account by clicking on ''*eRegister.''* You must select the type of filing you are making. If you are filing a comment on a particular project, please select ''Comment on a Filing''; or

(3) You can file a paper copy of your comments by mailing them to the following address: Kimberly D. Bose, Secretary, Federal Energy Regulatory Commission, 888 First Street NE., Room 1A, Washington, DC 20426.

Environmental Mailing List

The environmental mailing list includes federal, state, and local government representatives and agencies; elected officials; environmental and public interest groups; Native American Tribes; other interested parties; and local libraries and newspapers. This list also includes all affected landowners (as defined in the Commission's regulations) who are potential right-of-way grantors, whose property may be used temporarily for project purposes, or who own homes within certain distances of aboveground facilities, and anyone who submits comments on the project. We will update the environmental mailing list as the analysis proceeds to ensure that we send the information related to this environmental review to all individuals, organizations, and government entities interested in and/or potentially affected by the planned project.

Copies of the completed draft EIS will be sent to the environmental mailing list for public review and comment. If you would prefer to receive a paper copy of the document instead of the CD version or would like to remove your name from the mailing list, please return the attached Information Request (appendix 4).

Becoming an Intervenor

Once Trunkline files its application with the Commission, you may want to become an ''intervenor'' which is an official party to the Commission's proceeding. Intervenors play a more formal role in the process and are able to file briefs, appear at hearings, and be heard by the courts if they choose to appeal the Commission's final ruling. An intervenor formally participates in the proceeding by filing a request to intervene. Instructions for becoming an intervenor are in the User's Guide under the ''e-filing'' link on the Commission's Web site. Please note that the Commission will not accept requests for intervenor status at this time. You must wait until the Commission receives a formal application for the project.

Additional Information

Additional information about the project is available from the Commission's Office of External Affairs, at (866) 208–FERC, or on the FERC Web site (*www.ferc.gov*) using the eLibrary link. Click on the eLibrary link, click on ''General Search'' and enter the docket number, excluding the last three digits in the Docket Number field (i.e., PF12–8). Be sure you have selected an appropriate date range. For assistance, please contact FERC Online Support at *FercOnlineSupport@ferc.gov* or toll free at (866) 208–3676, or for TTY, contact (202) 502–8659. The eLibrary link also provides access to the texts of formal documents issued by the Commission, such as orders, notices, and rulemakings.

In addition, the Commission offers a free service called eSubscription which allows you to keep track of all formal issuances and submittals in specific dockets. This can reduce the amount of time you spend researching proceedings by automatically providing you with notification of these filings, document summaries, and direct links to the documents. Go to *www.ferc.gov/esubscribenow.htm.*

Finally, public meetings or site visits will be posted on the Commission's calendar located at *www.ferc.gov/EventCalendar/EventsList.aspx* along with other related information.

Dated: March 21, 2013.

Kimberly D. Bose,

Secretary.

[FR Doc. 2013–07079 Filed 3–27–13; 8:45 am]

BILLING CODE 6717–01–P

DEPARTMENT OF ENERGY

Federal Energy Regulatory Commission

[Docket No. ER13–1150–000]

Alta Wind X, LLC; Supplemental Notice That Initial Market-Based Rate Filing Includes Request for Blanket Section 204 Authorization

This is a supplemental notice in the above-referenced proceeding, of Alta Wind X, LLC's application for market-based rate authority, with an accompanying rate schedule, noting that such application includes a request for blanket authorization, under 18 CFR part 34, of future issuances of securities and assumptions of liability.

Any person desiring to intervene or to protest should file with the Federal Energy Regulatory Commission, 888 First Street NE., Washington, DC 20426, in accordance with Rules 211 and 214 of the Commission's Rules of Practice and Procedure (18 CFR 385.211 and 385.214). Anyone filing a motion to intervene or protest must serve a copy of that document on the Applicant.

Notice is hereby given that the deadline for filing protests with regard to the applicant's request for blanket authorization, under 18 CFR part 34, of future issuances of securities and assumptions of liability is April 11, 2013.

The Commission encourages electronic submission of protests and interventions in lieu of paper, using the FERC Online links at *http://www.ferc.gov.* To facilitate electronic service, persons with Internet access who will eFile a document and/or be listed as a contact for an intervenor must create and validate an eRegistration account using the

eRegistration link. Select the eFiling link to log on and submit the intervention or protests.

Persons unable to file electronically should submit an original and 5 copies of the intervention or protest to the Federal Energy Regulatory Commission, 888 First Street NE., Washington, DC 20426.

The filings in the above-referenced proceeding(s) are accessible in the Commission's eLibrary system by clicking on the appropriate link in the above list. They are also available for review in the Commission's Public Reference Room in Washington, DC. There is an eSubscription link on the Web site that enables subscribers to receive email notification when a document is added to a subscribed docket(s). For assistance with any FERC Online service, please email *FERCOnlineSupport@ferc.gov* or call (866) 208–3676 (toll free). For TTY, call (202) 502–8659.

Dated: March 22, 2013.

Nathaniel J. Davis, Sr.,

Deputy Secretary.

[FR Doc. 2013–07220 Filed 3–27–13; 8:45 am]

BILLING CODE 6717–01–P

DEPARTMENT OF ENERGY

Federal Energy Regulatory Commission

[Docket No. ER13–1151–000]

Alta Wind XI, LLC; Supplemental Notice That Initial Market-Based Rate Filing Includes Request for Blanket Section 204 Authorization

This is a supplemental notice in the above-referenced proceeding, of Alta Wind XI, LLC's application for market-based rate authority, with an accompanying rate schedule, noting that such application includes a request for blanket authorization, under 18 CFR part 34, of future issuances of securities and assumptions of liability.

Any person desiring to intervene or to protest should file with the Federal Energy Regulatory Commission, 888 First Street NE., Washington, DC 20426, in accordance with Rules 211 and 214 of the Commission's Rules of Practice and Procedure (18 CFR 385.211 and 385.214). Anyone filing a motion to intervene or protest must serve a copy of that document on the Applicant.

Notice is hereby given that the deadline for filing protests with regard to the applicant's request for blanket authorization, under 18 CFR part 34, of future issuances of securities and assumptions of liability is April 11, 2013.

The Commission encourages electronic submission of protests and interventions in lieu of paper, using the FERC Online links at *http://www.ferc.gov* To facilitate electronic service, persons with Internet access who will eFile a document and/or be listed as a contact for an intervenor must create and validate an eRegistration account using the eRegistration link. Select the eFiling link to log on and submit the intervention or protests.

Persons unable to file electronically should submit an original and 5 copies of the intervention or protest to the Federal Energy Regulatory Commission, 888 First Street NE., Washington, DC 20426.

The filings in the above-referenced proceeding(s) are accessible in the Commission's eLibrary system by clicking on the appropriate link in the above list. They are also available for review in the Commission's Public Reference Room in Washington, DC. There is an eSubscription link on the Web site that enables subscribers to receive email notification when a document is added to a subscribed docket(s). For assistance with any FERC Online service, please email *FERCOnlineSupport@ferc.gov.* or call (866) 208–3676 (toll free). For TTY, call (202) 502–8659.

Dated: March 22, 2013.

Nathaniel J. Davis, Sr.,

Deputy Secretary.

[FR Doc. 2013–07221 Filed 3–27–13; 8:45 am]

BILLING CODE 6717–01–P

DEPARTMENT OF ENERGY

Federal Energy Regulatory Commission

[Docket No. ER13–1155–000]

DTE Stockton, LLC; Supplemental Notice That Initial Market-Based Rate Filing Includes Request for Blanket Section 204 Authorization

This is a supplemental notice in the above-referenced proceeding, of DTE Stockton, LLC's application for market-based rate authority, with an accompanying rate schedule, noting that such application includes a request for blanket authorization, under 18 CFR part 34, of future issuances of securities and assumptions of liability.

Any person desiring to intervene or to protest should file with the Federal Energy Regulatory Commission, 888 First Street NE., Washington, DC 20426, in accordance with Rules 211 and 214 of the Commission's Rules of Practice and Procedure (18 CFR 385.211 and 385.214). Anyone filing a motion to intervene or protest must serve a copy of that document on the Applicant.

Notice is hereby given that the deadline for filing protests with regard to the applicant's request for blanket authorization, under 18 CFR part 34, of future issuances of securities and assumptions of liability is April 11, 2013.

The Commission encourages electronic submission of protests and interventions in lieu of paper, using the FERC Online links at *http://www.ferc.gov*. To facilitate electronic service, persons with Internet access who will eFile a document and/or be listed as a contact for an intervenor must create and validate an eRegistration account using the eRegistration link. Select the eFiling link to log on and submit the intervention or protests.

Persons unable to file electronically should submit an original and 5 copies of the intervention or protest to the Federal Energy Regulatory Commission, 888 First Street NE., Washington, DC 20426.

The filings in the above-referenced proceeding(s) are accessible in the Commission's eLibrary system by clicking on the appropriate link in the above list. They are also available for review in the Commission's Public Reference Room in Washington, DC. There is an eSubscription link on the Web site that enables subscribers to receive email notification when a document is added to a subscribed docket(s). For assistance with any FERC Online service, please email *FERCOnlineSupport@ferc.gov* or call (866) 208–3676 (toll free). For TTY, call (202) 502–8659.

Dated: March 22, 2013.

Nathaniel J. Davis, Sr.,

Deputy Secretary.

[FR Doc. 2013–07215 Filed 3–27–13; 8:45 am]

BILLING CODE 6717–01–P

DEPARTMENT OF ENERGY

Federal Energy Regulatory Commission

[Docket No. PR13–40–000]

Bridgeline Holdings, L.P.; Notice of Petition for Rate Approval

Take notice that on February 28, 2013, as supplemented on March 12, 2013, Bridgeline Holdings, L.P. filed for approval of rates for transportation services provided pursuant to 284.123(b)(2) of the Commissions

regulations, as more fully detailed in the petition.

Any person desiring to participate in this rate filing must file in accordance with Rules 211 and 214 of the Commission's Rules of Practice and Procedure (18 CFR 385.211 and 385.214). Protests will be considered by the Commission in determining the appropriate action to be taken, but will not serve to make protestants parties to the proceeding. Any person wishing to become a party must file a notice of intervention or motion to intervene, as appropriate. Such notices, motions, or protests must be filed on or before the date as indicated below. Anyone filing an intervention or protest must serve a copy of that document on the Applicant. Anyone filing an intervention or protest on or before the intervention or protest date need not serve motions to intervene or protests on persons other than the Applicant.

The Commission encourages electronic submission of protests and interventions in lieu of paper using the ''eFiling'' link at *http://www.ferc.gov.* Persons unable to file electronically should submit an original and 5 copies of the protest or intervention to the Federal Energy Regulatory Commission, 888 First Street NE., Washington, DC 20426.

This filing is accessible online at *http://www.ferc.gov,* using the ''eLibrary'' link and is available for review in the Commission's Public Reference Room in Washington, DC. There is an ''eSubscription'' link on the Web site that enables subscribers to receive email notification when a document is added to a subscribed docket(s). For assistance with any FERC Online service, please email *FERCOnlineSupport@ferc.gov,* or call (866) 208–3676 (toll free). For TTY, call (202) 502–8659.

Comment Date: 5:00 p.m. Eastern Time on Monday, April 1, 2013.

Dated: March 21, 2013.

Kimberly D. Bose,

Secretary.

[FR Doc. 2013–07080 Filed 3–27–13; 8:45 am]

BILLING CODE 6717–01–P

DEPARTMENT OF ENERGY

Federal Energy Regulatory Commission

[Docket No. PR13–43–000]

ONEOK Texas Gas Storage, L.L.C.; Notice of Petition for Rate Approval

Take notice that on March 14, 2013, ONEOK Texas Gas Storage, L.L.C. filed a Rate Election pursuant to 284.123(b)(1) of the Commissions regulations proposing to continue its existing maximum rate for Part 284 interruptible storage service, which is based on the rate for comparable intrastate service on file with the Railroad Commission of Texas, as more fully detailed in the petition.

Any person desiring to participate in this rate filing must file in accordance with Rules 211 and 214 of the Commission's Rules of Practice and Procedure (18 CFR 385.211 and 385.214). Protests will be considered by the Commission in determining the appropriate action to be taken, but will not serve to make protestants parties to the proceeding. Any person wishing to become a party must file a notice of intervention or motion to intervene, as appropriate. Such notices, motions, or protests must be filed on or before the date as indicated below. Anyone filing an intervention or protest must serve a copy of that document on the Applicant. Anyone filing an intervention or protest on or before the intervention or protest date need not serve motions to intervene or protests on persons other than the Applicant.

The Commission encourages electronic submission of protests and interventions in lieu of paper using the ''eFiling'' link at *http://www.ferc.gov.* Persons unable to file electronically should submit an original and 5 copies of the protest or intervention to the Federal Energy Regulatory Commission, 888 First Street NE., Washington, DC 20426.

This filing is accessible on-line at *http://www.ferc.gov,* using the ''eLibrary'' link and is available for review in the Commission's Public Reference Room in Washington, DC. There is an ''eSubscription'' link on the Web site that enables subscribers to receive email notification when a document is added to a subscribed docket(s). For assistance with any FERC Online service, please email *FERCOnlineSupport@ferc.gov,* or call (866) 208–3676 (toll free). For TTY, call (202) 502–8659.

Comment Date: 5:00 p.m. Eastern Time on Monday, April 1, 2013.

Dated: March 21, 2013.

Kimberly D. Bose,

Secretary.

[FR Doc. 2013–07082 Filed 3–27–13; 8:45 am]

BILLING CODE 6717–01–P

DEPARTMENT OF ENERGY

Federal Energy Regulatory Commission

[Docket No. AD10–12–004]

Increasing Market and Planning Efficiency Through Improved Software; Notice of Technical Conference: Increasing Real-Time and Day-Ahead Market Efficiency Through Improved Software

Take notice that Commission staff will convene a technical conference on June 24, 25, and 26, 2013 to discuss opportunities for increasing real-time and day-ahead market efficiency through improved software. A detailed agenda with the list of and times for the selected speakers will be published on the Commission's Web site [1] after May 13, 2013.

This conference will bring together experts from diverse backgrounds and experiences including electric system operators, software developers, government, research centers and academia for the purposes of stimulating discussion, sharing information, and identifying fruitful avenues for research concerning the technical aspects of improved software for increasing efficiency. This conference is intended to build on the discussions initiated in the previous Commission staff technical conferences on increasing market and planning efficiency through improved software. As such, staff will be facilitating a discussion to explore research and steps needed to implement approaches to market modeling which appear to have significant promise for potential efficiency improvements in the following areas: Stochastic modeling; optimal transmission switching; AC optimal power flow modeling; and use of active and dynamic transmission ratings.

In particular we solicit proposals for presentations on topics and questions such as the following:

(1) *Stochastic modeling for unit commitment and operating reserves:* Given the difficulty in formulating and solving full-scale stochastic unit-commitment problems, what interim steps might be taken to more intelligently incorporate information about uncertainty into unit-commitment and dispatch? Specifically:

- How can uncertainty be described in a manageable set of scenarios or constraints that improve unit-commitment and dispatch while

[1] *http://www.ferc.gov/industries/electric/indus-act/market-planning.asp.*

allowing good solutions to be achieved in the required timeframe?

• If a stochastic unit-commitment model is used, how should day-ahead prices be calculated, given that the stochastic formulation no longer produces as part of its solution a single set of deterministic shadow prices for power at each location?

• How would a stochastic day-ahead unit commitment mechanism alter current market software for other processes (for example, reliability unit-commitment processes)?

• What steps toward better incorporation of uncertainty into unit-commitment might be taken over the next 5 to 10 years?

• What methods can be used to calculate requirements for contingency reserves and regulating reserves?

○ How can reserves calculations more completely capture the uncertainty and variability of the system, including forecast error?

○ How can outage probability be captured in contingency reserve calculations, and how good is the available data?

○ What methods can be used to determine reserve zones?

(2) Optimal transmission switching:

• Simple optimal DC transmission switching appears to represent a potentially solvable technical problem using existing computational resources if transmission operators optimize only a small number of transmission switch positions. It is less clear whether transmission switching model formulations that include realistic representations of reliability requirements are solvable. What is the performance of these more complex model formulations?

• What additional computational impediments, if any, exist to implementing optimal transmission switching over a small number of switches while maintaining reliability?

• Optimal AC transmission switching presents additional technical problems. What is the performance of these formulations?

• What steps toward optimal transmission switching might be taken over the next 5 to 10 years?

(3) AC optimal power flow modeling:

• What is the current state of computational capability with respect to dependably solving AC optimal power flow problems, including analysis of power system reliability?

• Discussions during previous conferences have centered on concerns that current system data quality might not allow for an AC optimal power flow model to be properly formulated and solved. What are the specific data concerns, and what needs to be done to address them? What accuracy of solutions is good enough for convergence parameters?

• What steps toward use of AC optimal power flow modeling might be taken over the next 5 to 10 years?

(4) Transmission limit modeling:

• Previous presentations examined the use of post-contingency analysis when determining transmission ratings, including consideration of availability of ramping capability. How can (or have) adaptive transmission ratings been implemented?

• Previous presentations also examined how transmission ratings might be updated in real time in response to ambient conditions. How have such dynamic transmission ratings been implemented?

• What are the data or computational challenges associated with implementing adaptive or dynamic transmission ratings?

• How can inter-temporal considerations regarding transmission line loadings and limits be incorporated into economic dispatch algorithms?

(5) Improvement in linear programs, nonlinear programs and MIPs for faster and/or better solutions.

(6) New more efficient approaches to loop flow and joint dispatch. How much inefficiency exists in the current process?

Discussion of these topics should highlight any advances made since last year's conference and provide context for any proposals or presentations on best practices, other analyses of current operations with respect to these and related topics, and provide opportunity to discuss existing practices that need improvement.

The technical conference will be held in conference rooms 3M–2, 3M–3, and 3M–4 at the Federal Energy Regulatory Commission, 888 First Street NE., Washington, DC 20426. All interested participants are invited to attend, and participants with ideas for relevant presentations are invited to nominate themselves to speak at the conference.

Speaker nominations must be submitted on or before April 26, 2013 through the Commission's Web site [2] by providing the proposed speaker's contact information along with a title, abstract, and list of contributing authors for the proposed presentation. Proposed presentations should be closely related to the topics discussed above. Speakers and presentations will be selected to ensure relevant topics and to accommodate time constraints.

Although registration is not required for general attendance by United States citizens, we encourage those planning to attend the conference to register through the Commission's Web site.[3] We will provide nametags for those who register on or before June 20, 2013.

Due to new security procedures, we strongly encourage attendees who are not citizens of the United States to register for the conference by June 1, 2013, in order to avoid any delay associated with being processed by FERC security.

The Commission will accept comments following the conference, with a deadline of July 31, 2013.

There is an ''eSubscription'' link on the Web site that enables subscribers to receive email notification when a document is added to a subscribed docket(s). For assistance with any FERC Online service, please email *FERCOnlineSupport@ferc.gov,* or call 866 208–3676 (toll free). For TTY, call 202 502–8659.

Teleconferencing and WebEx will be available. Off-site participants interested in attending via teleconference or viewing the presentations through WebEx must register at *https://www.ferc.gov/whats-new/registration/real-market-6-24-13-form.asp,* and do so by close of business on June 17, 2013. WebEx and teleconferencing may not be available to those who do not register.

FERC conferences are accessible under section 508 of the Rehabilitation Act of 1973. For accessibility accommodations please send an email to *accessibility@ferc.gov* or call toll free (866) 208–3372 (voice) or (202) 502–8659 (TTY), or send a fax to (202) 208–2106 with the required accommodations.

For further information about these conferences, please contact: Sarah McKinley (Logistical Information), Office of External Affairs, (202) 502–8004, *Sarah.McKinley@ferc.gov.* Brian Bak (Technical Information), Office of Energy Policy and Innovation, (202) 502–6574, *Brian.Bak@ferc.gov.*

Dated: March 22, 2013.

Nathaniel J. Davis, Sr.,

Deputy Secretary.

[FR Doc. 2013–07216 Filed 3–27–13; 8:45 am]

BILLING CODE 6717–01–P

[2] The speaker nomination form is located at *https://www.ferc.gov/whats-new/registration/real-market-6-24-13-speaker-form.asp.*

[3] The registration form is located at *https://www.ferc.gov/whats-new/registration/real-market-6-24-13-form.asp.*

DEPARTMENT OF ENERGY

Southeastern Power Administration

Proposed Rate Extension and Opportunities for Public Review and Comment for the Cumberland System

AGENCY: Southeastern Power Administration, DOE.

ACTION: Notice of proposed rate extension.

SUMMARY: Southeastern Power Administration (Southeastern) proposes to extend the existing schedules of rates and charges applicable to the sale of power from the Cumberland System effective for a two-year period, October 1, 2013, through September 30, 2015.

DATES: Written comments are due on or before April 29, 2013.

ADDRESSES: Written comments should be submitted to: Administrator, Southeastern Power Administration, U.S. Department of Energy, 1166 Athens Tech Road, Elberton, Georgia, 30635–6711.

FOR FURTHER INFORMATION CONTACT: Virgil Hobbs, Assistant Administrator, Finance & Marketing, Southeastern Power Administration, U.S. Department of Energy, 1166 Athens Tech Road, Elberton, Georgia, 30635, (706) 213–3800.

SUPPLEMENTARY INFORMATION: By Delegation Order No. 00–037.00, effective December 6, 2001, the Secretary of Energy delegated: (1) The authority to develop power and transmission rates to Southeastern's Administrator; (2) the authority to confirm, approve, and place such rates into effect on an interim basis to the Deputy Secretary of Energy; and (3) the authority to confirm, approve, and place into effect on a final basis, to remand or to disapprove such rates to the Federal Energy Regulatory Commission (FERC).

By order issued December 22, 2011 (137 FERC ¶ 62,249), FERC confirmed and approved on a final basis Wholesale Power Rate Schedules CBR–1–H, CSI–1–H, CEK–1–H, CM–1–H, CC–1–I, CK–1–H, CTV–1–H, CTVI–1–A, and Replacement-3 (collectively, SEPA–55 Rate Schedules) for the period from October 1, 2011, through September 30, 2013. In accordance with 10 CFR 903.23(a), Southeastern proposes to extend the SEPA–55 Rate Schedules without an adjustment.

The SEPA–55 Rate Schedules are associated with the Cumberland System (System), which consists of nine projects in the Cumberland River Basin in Tennessee and Kentucky. Under normal operating conditions, the System provides 950 MW of capacity and 2,991,000 MWh of average annual energy to 25 preference entities that serve 210 preference customers in Alabama, Georgia, Illinois, Kentucky, Mississippi, North Carolina, Tennessee and Virginia.

At present, peaking operation cannot be supported from the System due to operating restrictions on the Wolf Creek and Center Hill Projects imposed by the U. S. Army Corps of Engineers (Corps). The operating restrictions will remain in effect until earthen embankment repairs are complete to prevent the failure of these two dams. Southeastern has implemented an Interim Operating Plan to provide energy without capacity to the customers while the Wolf Creek and Center Hill dam safety repairs are finalized. The Wolf Creek Dam work is expected to be completed in December 2013 and the Center Hill earthen dam repair is scheduled to be complete early in fiscal year 2015.

The existing rate schedules are predicated upon an August 2011 repayment study and other supporting data. The current rate schedules exclude the dam safety repair costs discussed above. A repayment study prepared in January of 2013 shows existing rates are adequate to meet repayment criteria, excluding the dam safety costs. Southeastern is proposing to extend the existing rate schedules for two years. The extension of these rate schedules would extend the term to September 30, 2015.

The rate schedules Southeastern proposes to extend include three rate scenarios per rate schedule. Each of the rate scenarios has a revenue requirement of $59,600,000. The first rate scenario is currently in effect. In the event the other two rate scenarios go into effect during this proposed rate extension, they are described below.

The first rate scenario includes the rates necessary to recover costs while the Interim Operating Plan is in effect. The rate is a flat 17.69 mills per kilowatt-hour for all Cumberland energy. The customers pay a ratable share of the transmission credit provided to Tennessee Valley Authority (TVA) for delivery of capacity and energy for the benefit of other customers.

The second rate scenario would go into effect if some portion (but not all) of the System capacity can be scheduled. This scenario recovers cost from capacity and energy and would be implemented once the Corps restores the lake levels at the Wolf Creek and Center Hill Projects. When the lake level rises and capacity is available, the capacity would be allocated to the customers. Southeastern cannot predict the rates under the second scenario absent a determination concerning how much of the partial System will be brought back online.

The third rate scenario is based on the original Cumberland Marketing Policy and would go into effect once the Corps lifts all restrictions on the System. All costs are recovered from capacity and excess energy. Because the third rate scenario is more complicated than the first scenario, Southeastern provides the following table to explain how it would apply to the SEPA–55 Rate Schedules if it goes into effect:

Cumberland System Rates

Third Scenario—Return to Original Marketing Policy

Inside TVA Preference Customers (Rate Schedules CTVI–1–A, CTV–1–H)

Capacity and Base Energy: $2.779 per kW/Month

Additional Energy: 10.358 mills per kWh

Transmission: Pass-through

Outside TVA Preference Customers (Rate Schedules CBR–1–H, CSI–1–H, CM–1–H, CK–1–H)

Capacity and Base Energy: $4.245 per kW/Month

Additional Energy: 10.358 mills per kWh

Customers Served through Carolina Power & Light Company (Rate

Capacity and Base Energy: $4.832 per kW/Month

Transmission: $1.4779 per kW/Month

East Kentucky Power Cooperative (Rate Schedule CEK–1–H):

Capacity: $2.95 per kW/Month

Energy: 10.358 mills per kWh

The referenced repayment study is available for examination at 1166 Athens Tech Road, Elberton, Georgia, 30635–6711. Rate Schedules CBR–1–H, CSI–1–H, CEK–1–H, CM–1–H, CC–1–I, CK–1–H, CTV–1–H, CTVI–1–A, and Replacement-3 are also available.

After publication of this Notice and review of public comments, Southeastern will take further action on the proposed extension of rates consistent with 10 CFR part 903.

Dated: March 19, 2013.

Kenneth E. Legg,

Administrator.

[FR Doc. 2013–07241 Filed 3–27–13; 8:45 am]

BILLING CODE 6450–01–P

ENVIRONMENTAL PROTECTION AGENCY

[EPA–HQ–OECA–2012–0643; FRL–9529–7]

Agency Information Collection Activities; Submission to OMB for Review and Approval; Comment Request; NSPS for Pressure Sensitive Tape and Label Surface Coating Operations (Renewal)

AGENCY: Environmental Protection Agency (EPA).

ACTION: Notice.

SUMMARY: In compliance with the Paperwork Reduction Act (44 U.S.C. 3501 *et seq.*), this document announces that an Information Collection Request (ICR) has been forwarded to the Office of Management and Budget (OMB) for review and approval. This is a request to renew an existing approved collection. The ICR which is abstracted below describes the nature of the collection and the estimated burden and cost.

DATES: Additional comments may be submitted on or before April 29, 2013.

ADDRESSES: Submit your comments, referencing docket ID number EPA–HQ–OECA–2012–0643, to: (1) EPA online, using *www.regulations.gov* (our preferred method), or by email to: *docket.oeca@epa.gov,* or by mail to: EPA Docket Center (EPA/DC), Environmental Protection Agency, Enforcement and Compliance Docket and Information Center, mail code 28221T, 1200 Pennsylvania Avenue NW., Washington, DC 20460; and (2) OMB at: Office of Information and Regulatory Affairs, Office of Management and Budget (OMB), Attention: Desk Officer for EPA, 725 17th Street NW., Washington, DC 20503.

FOR FURTHER INFORMATION CONTACT: Learia Williams, Monitoring, Assistance, and Media Programs Division, Office of Compliance, Mail Code 2227A, Environmental Protection Agency, 1200 Pennsylvania Avenue NW., Washington, DC 20460; telephone number: (202) 564–4113; fax number: (202) 564–0050; email address: *williams.learia@epa.gov.*

SUPPLEMENTARY INFORMATION: EPA has submitted the following ICR to OMB for review and approval according to the procedures prescribed in 5 CFR 1320.12. On October 17, 2012 (77 FR 63813), EPA sought comments on this ICR pursuant to 5 CFR 1320.8(d). EPA received no comments. Any additional comments on this ICR should be submitted to both EPA and OMB within 30 days of this notice.

EPA has established a public docket for this ICR under docket ID number EPA–HQ–OECA–2012–0643, which is available for either public viewing online at *http://www.regulations.gov*, or in person viewing at the Enforcement and Compliance Docket in the EPA Docket Center (EPA/DC), EPA West, Room 3334, 1301 Constitution Avenue NW., Washington, DC. The EPA Docket Center Public Reading Room is open from 8:30 a.m. to 4:30 p.m., Monday through Friday, excluding legal holidays. The telephone number for the Reading Room is (202) 566–1744, and the telephone number for the Enforcement and Compliance Docket is (202) 566–1752.

Use EPA's electronic docket and comment system at *http://www.regulations.gov*, either to either submit or view public comments, access the index listing of the contents of the docket, and to access those documents in the docket that are available electronically. Once in the system, select ''docket search,'' then key in the docket ID number identified above. Please note that EPA's policy is that public comments, whether submitted electronically or in paper, will be made available for public viewing at *http://www.regulations.gov* as EPA receives them and without change, unless the comment contains copyrighted material, Confidentiality of Business Information (CBI), or other information whose public disclosure is restricted by statute. For further information about the electronic docket, go to *www.regulations.gov.*

Title: NSPS for Pressure Sensitive Tape and Label Surface Coating Operations (Renewal).

ICR Numbers: EPA ICR Number 0658.11, OMB Control Number 2060–0004.

ICR Status: This ICR is scheduled to expire on June 30, 2013. Under OMB regulations, the Agency may continue to either conduct or sponsor the collection of information while this submission is pending at OMB.

Abstract: The affected entities are subject to the General Provisions of the NSPS at 40 CFR part 60, subpart A, and any changes, or additions to the Provisions specified at 40 CFR part 60, subpart RR. Owners or operators of the affected facilities must submit an initial notification report, performance tests, and periodic reports and results. Owners or operators are also required to maintain records of the occurrence and duration of any startup, shutdown, or malfunction in the operation of an affected facility, or any period during which the monitoring system is inoperative. Reports are required semiannually at a minimum.

Burden Statement: The annual public reporting and recordkeeping burden for this collection of information is estimated to average 26 hours per response. ''Burden'' means the total time, effort, or financial resources expended by persons to generate, maintain, retain, or disclose or provide information to or for a Federal agency. This includes the time needed to review instructions; develop, acquire, install, and utilize technology and systems for the purposes of collecting, validating, and verifying information, processing and maintaining information, and disclosing and providing information; adjust the existing ways to comply with any previously- applicable instructions and requirements which have subsequently changed; train personnel to be able to respond to a collection of information; search data sources; complete and review the collection of information; and transmit or otherwise disclose the information.

Respondents/Affected Entities: Owners or operators of pressure sensitive tape and label surface coating operations.

Estimated Number of Respondents: 39.

Frequency of Response: Initially, occasionally, and semiannually.

Estimated Total Annual Hour Burden: 3,652.

Estimated Total Annual Cost: $427,962, which includes $350,762 in labor costs, $7,000 in capital/startup costs, and $70,200 in operation and maintenance (O&M) costs.

Changes in the Estimates: There is an adjustment increase in the total estimated burden as currently identified in the OMB Inventory of Approved Burdens. This increase is not due to any program changes. The adjustment increase in burden from the most recently approved ICR is due to an increase in the number of sources and an increase in labor rates. The increase in the number of sources subject to the standard also results in an increase in the total operation and maintenance (O&M) costs as calculated in section 6(b)(iii) since the previous ICR.

There is an adjustment decrease in the total Agency burden costs. The reason for the change in Agency burden is related to a mathematical error in the calculations, which led to double counting of Agency costs in the previous ICR.

John Moses,

Director, Collection Strategies Division.

[FR Doc. 2013–07208 Filed 3–27–13; 8:45 am]

BILLING CODE 6560–50–P

ENVIRONMENTAL PROTECTION AGENCY

[EPA–HQ–ORD–2013–0115; FRL 9794–8]

Human Studies Review Board; Notification of a Public Webinar/ Teleconference

AGENCY: U. S. Environmental Protection Agency (EPA).

ACTION: Notice.

SUMMARY: The EPA Office of the Science Advisor announces a public Webinar/ teleconference of the Human Studies Review Board (HSRB) to discuss its draft report on the HSRB meeting held January 17, 2013.

DATES: The Webinar/teleconference will be held on Friday, April 12, 2013, from approximately 11:00 a.m. to approximately 12:30 p.m. Eastern Time. Comments may be submitted on or before Friday, April 5, 2013. Information regarding the HSRB final meeting report will be found at *http://www.epa.gov/osa/hsrb* and *http://www.regulations.gov* or from the persons listed under **FOR FURTHER INFORMATION CONTACT**.

Webcast: This meeting may be webcast. Please refer to the HSRB Web site *http://www.epa.gov/osa/hsrb* for information on how to access the webcast. If difficulties arise resulting in webcasting outages, the meeting will continue as planned.

ADDRESSES: Submit your written comments, identified by Docket ID No. EPA–HQ–ORD–2013–0115, by one of the following methods:

Internet: http://www.regulations.gov: Follow the Web site instructions for submitting comments.

Email: ORD.Docket@epa.gov.

Mail: Environmental Protection Agency, EPA Docket Center EPA/DC, ORD Docket, Mail Code 28221T, 1200 Pennsylvania Avenue NW., Washington, DC 20460.

Hand Delivery: The EPA/DC Public Reading Room is located in the EPA Headquarters Library, Room Number 3334 in the EPA West Building, located at 1301 Constitution Avenue NW., Washington, DC 20460. The Reading Room's hours of operation are 8:30 a.m. to 4:30 p.m. Eastern Time, Monday through Friday, excluding Federal holidays. Please call (202)566–1744 or email the ORD Docket at *ord.docket@epa.gov* for instructions. Updates to Public Reading Room access are available online at *http://www.epa.gov/epahome/dockets.htm.*

Instructions: Direct your comments to Docket ID No. EPA–HQ–ORD–2013–0115. The Agency's policy is that all comments received will be included in the public docket without change and may be made available online at *http://www.regulations.gov,* including any personal information provided, unless the comment includes information claimed to be Confidential Business Information or other information the disclosure of which is restricted by statute. Do not submit information that you consider to be CBI or otherwise protected through *http://www.regulations.gov* or email. The *http://www.regulations.gov* Web site is an ''anonymous access'' system, which means the EPA will not know your identity or contact information unless you provide it in the body of your comment. If you send an email comment directly to the EPA without going through *http://www.regulations.gov,* your email address will be automatically captured and included as part of the comment that is placed in the public docket and made available on the Internet. If you submit an electronic comment, the EPA recommends that you include your name and other contact information in the body of your comments and with any disk or CD–ROM you submit. If the EPA cannot read your comment due to technical difficulties and cannot contact you for clarification, the EPA may not be able to consider your comment. Electronic files should avoid the use of special characters, any form of encryption, and be free of any defects or viruses.

FOR FURTHER INFORMATION CONTACT: Any members of the public who wish to receive further information about this Webinar/Teleconference should contact Jim Downing at telephone number (202)564–2468; fax (202)564–2070; email address *downing.jim@epa.gov* or Lu-Ann Kleibacker on telephone number (202)564–7189; fax: (202)564–2070; email address *kleibacker.lu-ann@epa.gov;* mailing address Environmental Protection Agency, Office of the Science Advisor, Mail Code 8105R, 1200 Pennsylvania Avenue NW., Washington, DC 20460. General information concerning the HSRB can be found on the EPA Web site at *http://www.epa.gov/osa/hsrb.*

SUPPLEMENTARY INFORMATION:

Location: The meeting will take place via the Internet and telephone only. Access information can be found on the HSRB Web site: *http://www.epa.gov/osa/hsrb/* or by contacting the persons listed under the **FOR FURTHER INFORMATION CONTACT** section of this Notice.

Meeting access: For detailed information on access or services for individuals with disabilities, please contact Lu-Ann Kleibacker at least ten business days prior to the meeting using the information under **FOR FURTHER INFORMATION CONTACT,** so that appropriate arrangements can be made.

Procedures for providing public input: Interested members of the public may submit relevant written or oral comments for the HSRB to consider during the advisory process. Additional information concerning submission of relevant written or oral comments is provided in Section I, ''Public Meeting,'' under subsection D, ''How May I Participate in this Meeting?'' of this notice.

I. Public Meeting

A. Does this action apply to me?

This action is directed to the public in general. This action may, however, be of particular interest to persons who conduct or assess human studies, especially studies on substances regulated by the EPA, or to persons who are, or may be required to conduct testing of chemical substances under the Federal Food, Drug, and Cosmetic Act or the Federal Insecticide, Fungicide, and Rodenticide Act. Since other entities may also be interested, the EPA has not attempted to describe all the specific entities that may be affected by this action. If you have any questions regarding the applicability of this action to a particular entity, consult Jim Downing or Lu-Ann Kleibacker listed under **FOR FURTHER INFORMATION CONTACT**.

B. How can I access electronic copies of this document and other related information?

You may use *http://www.regulations.gov,* or you may access this **Federal Register** document via the EPA's Internet site under the ''**Federal Register**'' listings at *http://www.epa.gov/fedrgstr.*

Docket: All documents in the docket are listed in the *http://www.regulations.gov* index. Although listed in the index, some information is not publicly available, e.g., CBI or other information whose disclosure is restricted by statute. Certain other material, such as copyrighted material, will be publicly available only in hard copy. Publicly available docket materials are available either electronically at *http://www.regulations.gov* or in hard copy at the ORD Docket, EPA/DC Public Reading Room. The EPA/DC Public Reading Room is located in the EPA Headquarters Library, Room Number 3334 in the EPA West Building, located

at 1301 Constitution Avenue NW., Washington, DC 20460; its hours of operation are 8:30 a.m. to 4:30 p.m. Eastern Time, Monday through Friday, excluding federal holidays. Please call (202)566–1744, or email the ORD Docket at *ord.docket@epa.gov* for instructions. Updates regarding the Public Reading Room access are available at *http://www.epa.gov/epahome/dockets.htm.*

C. What should I consider as I prepare my comments for the EPA?

You may find the following suggestions helpful for preparing your comments:

1. Explain your views as clearly as possible.
2. Describe any assumptions that you used.
3. Provide copies of any technical information and/or data used that support your views.
4. Provide specific examples to illustrate your concerns and suggest alternatives.
5. To ensure proper receipt by the EPA, be sure to identify the docket ID number assigned to this action in the subject line on the first page of your response. You may also provide the name, date and **Federal Register** citation.

D. How may I participate in this meeting?

You may participate by providing comments in this meeting by following the instructions in this section. To ensure proper receipt of your comments by the EPA, it is imperative that you identify Docket ID No. EPA–HQ–ORD–2013–0115 in the subject line on the first page of your request.

1. *Oral comments.* Requests to present oral comments will be accepted up to and including Friday, April 5, 2013. To the extent that time permits, interested persons who have not pre-registered may be permitted by the Chair of the HSRB to present oral comments during the meeting. Each individual or group wishing to make brief oral comments to the HSRB is strongly advised to submit their request (preferably via email) to Jim Downing or Lu-Ann Kleibacker under **FOR FURTHER INFORMATION CONTACT** no later than noon, Eastern Time, Friday, April 5, 2013, in order to be included on the meeting agenda and to provide sufficient time for the HSRB Chair and HSRB Designated Federal Official to review the meeting agenda to provide an appropriate public comment period. The request should identify the name of the individual making the presentation and the organization (if any) the individual will represent. Oral comments before the HSRB are generally limited to five minutes per individual or organization. Please note that this includes all individuals appearing either as part of, or on behalf of, an organization. While it is our intent to hear a full range of oral comments on the science and ethics issues under discussion, it is not our intent to permit organizations to expand the time limitations by having numerous individuals sign up separately to speak on their behalf. If additional time is available, further public comments may be possible.

2. *Written comments.* Please submit written comments prior to the meeting. For the HSRB to have the best opportunity to review and consider your comments as it deliberates on its report, you should submit your comments at least five business days prior to the beginning of this teleconference. If you submit comments after this date, those comments will be provided to the Board members, but you should recognize that the Board members may not have adequate time to consider those comments prior to making a decision. Thus, if you plan to submit written comments, the Agency strongly encourages you to submit such comments no later than noon, Eastern Time, Friday, April 5, 2013. You should submit your comments using the instructions in Section I, under subsection C, ''What Should I Consider as I Prepare My Comments for the EPA?'' In addition, the EPA also requests that persons submitting comments directly to the docket also provide a copy of their comments to Jim Downing or Lu-Ann Kleibacker listed under **FOR FURTHER INFORMATION CONTACT.** There is no limit on the length of written comments for consideration by the HSRB.

E. Background

The HSRB is a Federal advisory committee operating in accordance with the Federal Advisory Committee Act 5 U.S.C. App. 2 Section 9. The HSRB provides advice, information, and recommendations to the EPA on issues related to scientific and ethical aspects of human subjects research. The major objectives of the HSRB are to provide advice and recommendations on: (1) Research proposals and protocols; (2) reports of completed research with human subjects; and (3) how to strengthen the EPA's programs for protection of human subjects of research. The HSRB reports to the EPA Administrator through the EPA Science Advisor.

1. *Topics for Discussion.* The HSRB will be reviewing its draft report from the January 17, 2013, HSRB meeting. The HSRB may also discuss planning for future HSRB meetings. Background on the January 17, 2013 HSRB meeting can be found at the HSRB Web site: *http://www.epa.gov/osa/hsrb.* The January 17, 2013 meeting draft report is available. You may obtain electronic copies of this document, and certain other related documents that might be available electronically, from regulations.gov and the HSRB Web site at *http://www.epa.gov/osa/hsrb.* For questions on document availability or if you do not have internet access, consult the persons listed under **FOR FURTHER INFORMATION.**

2. *Meeting minutes and reports.* Minutes of the meeting, summarizing the matters discussed and recommendations, if any, made by the advisory committee regarding such matters, will be released within 90 calendar days of the meeting. Such minutes will be available at *http://www.epa.gov/osa/hsrb/* and *http://www.regulations.gov.* In addition, information regarding the HSRB final meeting report will be found at *http://www.epa.gov/osa/hsrb* and *http://www.regulations.gov* or from the persons listed under **FOR FURTHER INFORMATION CONTACT.**

Dated: March 20, 2013.

Glenn Paulson,

Science Advisor.

[FR Doc. 2013–07263 Filed 3–27–13; 8:45 am]

BILLING CODE 6560–50–P

ENVIRONMENTAL PROTECTION AGENCY

[FRL 9794–9]

Proposed Settlement Agreement, Clean Air Act Citizen Suit

AGENCY: Environmental Protection Agency (EPA).

ACTION: Notice of Proposed Settlement Agreement; Request for Public Comment

SUMMARY: In accordance with section 113(g) of the Clean Air Act, as amended (''CAA'' or the ''Act''), 42 U.S.C. 7413(g), notice is hereby given of a proposed settlement agreement to settle a lawsuit filed by Louisiana Environmental Action Network and Sierra Club in the United States District Court for the District of Columbia: *Louisiana Environmental Action Network and Sierra Club* v. *Jackson,* Case No. 12–1096 (D.D.C.) (''*LEAN* v. *Jackson''*). Plaintiffs filed this suit to compel the Administrator to respond to two administrative petitions (the ''June 2010 petition'' and the ''May 2011

petition'') requesting, among other things, that EPA object to CAA Title V operating permits issued by the Louisiana Department of Environmental Quality to Consolidated Environmental Management, Inc.—Nucor Steel Louisiana for a pig iron manufacturing process and for a direct reduced iron manufacturing process in St. James Parish, Louisiana. Under the terms of the proposed settlement agreement, EPA would agree to sign an order granting or denying one objection (''Specific Objection I'') in the May 2011 petition under 42 U.S.C. 7661d(b)(2) by April 29, 2013, and to sign an order or orders granting or denying the June 2010 petition and May 2011 petition (except for Specific Objection I) under 42 U.S.C. 7661d(b)(2) by October 17, 2013.

DATES: Written comments on the proposed settlement agreement must be received by *April 29, 2013.*

ADDRESSES: Submit your comments, identified by Docket ID number EPA–HQ–OGC–2013–0212, online at *www.regulations.gov* (EPA's preferred method); by email to *oei.docket@epa.gov;* by mail to EPA Docket Center, Environmental Protection Agency, Mailcode: 2822T, 1200 Pennsylvania Ave. NW., Washington, DC 20460–0001; or by hand delivery or courier to EPA Docket Center, EPA West, Room 3334, 1301 Constitution Ave. NW., Washington, DC, between 8:30 a.m. and 4:30 p.m. Monday through Friday, excluding legal holidays. Comments on a disk or CD–ROM should be formatted in Word or ASCII file, avoiding the use of special characters and any form of encryption, and may be mailed to the mailing address above.

FOR FURTHER INFORMATION CONTACT: Melina Williams, Air and Radiation Law Office (2344A), Office of General Counsel, U.S. Environmental Protection Agency, 1200 Pennsylvania Ave. NW., Washington, DC 20460; telephone: (202) 564–3406; fax number (202) 564–5603; email address: *williams.melina@epa.gov.*

SUPPLEMENTARY INFORMATION:

I. Additional Information About the Proposed Settlement Agreement

This proposed settlement agreement would resolve a lawsuit alleging that the Administrator failed to perform a nondiscretionary duty to grant or deny, within 60 days of submission, two administrative petitions to object to CAA Title V operating permits issued by the Louisiana Department of Environmental Quality to Consolidated Environmental Management, Inc.—Nucor Steel Louisiana for a pig iron manufacturing process and for a direct reduced iron manufacturing process in St. James Parish, Louisiana. Under the terms of the proposed settlement agreement, EPA would agree to sign an order granting or denying one objection (''Specific Objection I'') in the May 2011 petition under 42 U.S.C. 7661d(b)(2) by April 29, 2013, and to sign an order or orders granting or denying the June 2010 petition and May 2011 petition (except for Specific Objection I) under 42 U.S.C. 7661d(b)(2) by October 17, 2013. Once EPA has signed such orders, EPA would be required to promptly provide written notice to Plaintiffs. If the proposed settlement agreement becomes final and EPA has provided Plaintiffs notice of the signed orders as required in Paragraphs 1 and 2 of the proposed settlement agreement, Plaintiffs would be required to file a motion for voluntary dismissal of the First Amended Complaint with prejudice in *LEAN* v. *Jackson.* In addition, the proposed settlement agreement contains provisions relating to the publication of notice of the signed orders in the **Federal Register** and relating to the settlement of Plaintiffs' claims for attorneys' fees and costs.

For a period of thirty (30) days following the date of publication of this notice, the Agency will accept written comments relating to the proposed settlement agreement from persons who were not named as parties or intervenors to the litigation in question. EPA or the Department of Justice may withdraw or withhold consent to the proposed settlement agreement if the comments disclose facts or considerations that indicate that such consent is inappropriate, improper, inadequate, or inconsistent with the requirements of the Act. Unless EPA or the Department of Justice determines that consent to this settlement agreement should be withdrawn, the terms of the agreement will be affirmed.

II. Additional Information About Commenting on the Proposed Settlement Agreement

A. How Can I Get A Copy Of the Settlement Agreement?

The official public docket for this action (identified by Docket ID No. EPA–HQ–OGC–2013–0212) contains a copy of the proposed settlement agreement. The official public docket is available for public viewing at the Office of Environmental Information (OEI) Docket in the EPA Docket Center, EPA West, Room 3334, 1301 Constitution Ave. NW., Washington, DC. The EPA Docket Center Public Reading Room is open from 8:30 a.m. to 4:30 p.m., Monday through Friday, excluding legal holidays. The telephone number for the Public Reading Room is (202) 566–1744, and the telephone number for the OEI Docket is (202) 566–1752.

An electronic version of the public docket is available through *www.regulations.gov.* You may use the *www.regulations.gov* to submit or view public comments, access the index listing of the contents of the official public docket, and to access those documents in the public docket that are available electronically. Once in the system, select ''search,'' then key in the appropriate docket identification number.

It is important to note that EPA's policy is that public comments, whether submitted electronically or in paper, will be made available for public viewing online at *www.regulations.gov* without change, unless the comment contains copyrighted material, CBI, or other information whose disclosure is restricted by statute. Information claimed as CBI and other information whose disclosure is restricted by statute is not included in the official public docket or in the electronic public docket. EPA's policy is that copyrighted material, including copyrighted material contained in a public comment, will not be placed in EPA's electronic public docket but will be available only in printed, paper form in the official public docket. Although not all docket materials may be available electronically, you may still access any of the publicly available docket materials through the EPA Docket Center.

B. How and to whom do I submit comments?

You may submit comments as provided in the **ADDRESSES** section. Please ensure that your comments are submitted within the specified comment period. Comments received after the close of the comment period will be marked ''late.'' EPA is not required to consider these late comments.

If you submit an electronic comment, EPA recommends that you include your name, mailing address, and an email address or other contact information in the body of your comment and with any disk or CD ROM you submit. This ensures that you can be identified as the submitter of the comment and allows EPA to contact you in case EPA cannot read your comment due to technical difficulties or needs further information on the substance of your comment. Any identifying or contact information provided in the body of a comment will be included as part of the comment that

is placed in the official public docket, and made available in EPA's electronic public docket. If EPA cannot read your comment due to technical difficulties and cannot contact you for clarification, EPA may not be able to consider your comment.

Use of the *www.regulations.gov* Web site to submit comments to EPA electronically is EPA's preferred method for receiving comments. The electronic public docket system is an ''anonymous access'' system, which means EPA will not know your identity, email address, or other contact information unless you provide it in the body of your comment. In contrast to EPA's electronic public docket, EPA's electronic mail (email) system is not an ''anonymous access'' system. If you send an email comment directly to the Docket without going through *www.regulations.gov,* your email address is automatically captured and included as part of the comment that is placed in the official public docket, and made available in EPA's electronic public docket.

Dated: March 20, 2013.

Lorie J. Schmidt,

Associate General Counsel.

[FR Doc. 2013–07262 Filed 3–27–13; 8:45 am]

BILLING CODE 6560–50–P

GENERAL SERVICES ADMINISTRATION

[OMB Control No. 3090–0086; Docket 2012–0001; Sequence 18]

General Services Administration Acquisition Regulation; Submission for OMB Review; Proposal to Lease Space, GSA Forms 1364A, 1364A–1, 1364B, 1364C, 1364D

AGENCY: Office of the Chief Acquisition Officer, General Services Administration (GSA).

ACTION: Notice of request for comments regarding an extension of an information collection requirement for an existing OMB clearance.

SUMMARY: Under the provisions of the Paperwork Reduction Act, the General Services Administration will be submitting to the Office of Management and Budget (OMB) a request to review and approve an extension of a previously approved information collection requirement for Proposal to Lease Space, GSA Form 1364. The approval is requested for 5 versions of the form, GSA Forms 1364A, 1364A–1, 1364B, 1364C, and 1364D. These forms are used to obtain information for offer evaluation and lease award purposes regarding property being offered for lease to house Federal agencies. This includes financial aspects of offers for analysis and negotiation, such as real estate taxes, adjustments for vacant space, and offerors' construction overhead fees.

DATES: Submit comments on or before: April 29, 2013.

ADDRESSES: Submit comments identified by Information Collection 3090–0086, Proposal to Lease Space, GSA Forms 1364A, 1364A–1, 1364B, 1364C and 1364D (Not Required by Regulation) by any of the following methods:

- *Regulations.gov: http://www.regulations.gov.* Submit comments via the Federal eRulemaking portal by searching for ''Information Collection 3090–0086, Proposal to Lease Space'' under the heading ''Enter Keyword or ID'' and selecting ''Search''. Select the link ''Submit a Comment'' that corresponds with ''Information Collection 3090–0086, Proposal to Lease Space''. Follow the instructions provided at the ''Submit a Comment'' screen. Please include your name, company name (if any), and ''Information Collection 3090–0086, Proposal to Lease Space'' on your attached document.
- *Fax:* 202–501–4067.
- *Mail:* General Services Administration, Regulatory Secretariat (MVCB), 1275 First Street, NE., Washington, DC 20417. ATTN: Hada Flowers/IC 3090–0086, Proposal to Lease Space.

Instructions: Please submit comments only and cite Information Collection 3090–0086, Proposal to Lease Space, in all correspondence related to this collection. All comments received will be posted without change to *http://www.regulations.gov,* including any personal and/or business confidential information provided.

FOR FURTHER INFORMATION CONTACT: Ms. Kathy Rifkin, Procurement Analyst, General Services Acquisition Policy Division, GSA (816) 823–2170 or via email at *kathy.rifkin@gsa.gov.*

SUPPLEMENTARY INFORMATION:

A. Purpose

The General Services Administration (GSA) has various mission responsibilities related to the acquisition and provision of real property management, and disposal of real and personal property. These mission responsibilities generate requirements that are realized through the solicitation and award of leasing contracts. Individual solicitations and resulting contracts may impose unique information collection/reporting requirements on contractors, not required by regulation, but necessary to (1) evaluate whether the physical attributes of offered properties meet the Government's requirements and (2) compare the owner/offeror's price proposal against competing offers.

These Form 1364 versions are products of a GSA Lease Reform Initiative to improve the lease acquisition process for GSA, client agencies, and the private sector. Process reform over the past 2 years has brought reform to GSA leasing by implementing a variety of enhancements and improvements to the methods by which GSA procures space. As a direct result of the reform, five new lease contract models have been developed that are targeted to meet the needs of the national leased portfolio. Four of the lease models require offerors to complete a GSA Form 1364. The new versions of GSA Form 1364 require the submission of information specifically aligned with the leasing models and avoid mandating submission of information that is not required for use in evaluation and award under each model.

The Simplified Lease Model uses GSA Forms 1364A and 1364A–1. This model obtains a firm, fixed price for rent, which includes the cost of tenant improvement construction. Therefore, leases using the Simplified model do not include post-award tenant improvement cost information on the form. The 1364A includes rental rate components and cost data that becomes part of the lease contract and that is necessary to satisfy GSA pricing policy requirements.

The 1364A–1 is a checklist that addresses technical requirements as referenced in the Request for Lease Proposals. The 1364A–1 is separate from the proposal itself and maintained in the lease file; it does not become an exhibit to the lease. The 1364A–1 may contain proprietary offeror information that cannot be released under the Freedom of Information Act.

The Streamlined Lease Model uses GSA Form 1364B. The Streamlined Lease model is a unique model that was designed to support small to mid-size leases up to $500,000 average net annual rent and occupancies that fall under Interagency Security Committee Security Levels I, II, and III. The Streamlined Lease model is not used for projects requiring lease construction or leases employing the best value trade-off evaluation process.

The Standard Lease Model, which relies on an allowance instead of firm fixed pricing for initial tenant improvements, uses GSA Form 1364C.

The 1364C captures an offeror's proposed interest rate and amortization period for the tenant improvements, in addition to the lessor's overhead fees.

The Succeeding and Superseding Lease Model uses GSA Form 1364D. These leases are negotiated with the existing lessor after advertisements and cost benefit analyses result in a determination that such a lease is in the best interests of the government. The form has less data input required than for a Standard lease; it also includes current rental rate information, supplied by the Government.

The 1364A–1, 1364B, and 1364C summarize an offeror's technical compliance with some important statutory and regulatory requirements to make the overall offer process easier for offerors to understand (e.g., accessibility and seismic standards, flood plain compliance, asbestos). The 1364C also limits the collection of tenant improvement overhead fees to the architect/engineering fees and lessor's project management fees. A notice was published in the **Federal Register** at 78 FR 303, on January 3, 2013. No comments were received.

B. Annual Reporting Burden

Respondents: 3565.

Responses per Respondent: 1.

Total Responses: 3565.

Hours per Response: 2.4238 (average).

Total Burden Hours: 8641.

Obtaining Copies of Proposals: Requesters may obtain a copy of the information collection documents from the General Services Administration, Regulatory Secretariat, 1275 First Street NE., Washington, DC 20417, telephone (202) 501–4755. Please cite OMB Control No. 3090–0086, GSA Form 1364, Proposal to Lease Space, in all correspondence.

Dated: March 20, 2013.

Joseph A. Neurauter,

Director, Office of Acquisition Policy & Senior Procurement Executive (MV).

[FR Doc. 2013–07249 Filed 3–27–13; 8:45 am]

BILLING CODE 6820–61–P

GENERAL SERVICES ADMINISTRATION

[Notice-FTR 2013–01; Docket 2013–0002; Sequence 7]

Maximum Per Diem Rates for the States of Oklahoma and Texas

AGENCY: Office of Governmentwide Policy (OGP), General Services Administration (GSA).

ACTION: Notice of Per Diem Bulletin 13–04, revised continental United States (CONUS) per diem rates.

SUMMARY: The General Services Administration (GSA) has conducted its mid-year review and has determined that the per diem rates for certain locations in the States of Oklahoma and Texas are inadequate.

DATES: *Effective date:* This notice is effective April 1, 2013 and applies to travel performed on or after April 1, 2013.

FOR FURTHER INFORMATION CONTACT: For clarification of content, please contact Ms. Jill Denning, Office of Governmentwide Policy, Office of Asset and Transportation Management, at 202–208–7642, or by email at *travelpolicy@gsa.gov.* Please cite Notice of FTR Bulletin 13–04.

SUPPLEMENTARY INFORMATION:

A. Background

After an analysis of the per diem rates established for FY 2013 (see the **Federal Register** notice at 77 FR 54578, September 5, 2012, and FTR Bulletin 13–01), non-standard area per diem rates are being established for the following locations:

State of Oklahoma

- Garfield County

State of Texas

- Midland County

CONUS per diem rates are published as FTR per diem bulletins available on the Internet at *www.gsa.gov/perdiem* and *www.gsa.gov/bulletins.* This process ensures timely notice of increases or decreases in per diem rates established by GSA for Federal employees on official travel within CONUS. Notices published periodically in the **Federal Register**, such as this one, now constitute the only notification of revisions in CONUS per diem rates to agencies.

Dated: March 22, 2013.

Craig J. Flynn,

Acting Deputy Director, Office of Asset and Transportation Management, Office of Governmentwide Policy.

[FR Doc. 2013–07243 Filed 3–27–13; 8:45 am]

BILLING CODE 6820–14–P

DEPARTMENT OF HEALTH AND HUMAN SERVICES

Office of the Secretary

[Document Identifier HHS–OS–19158–60D]

Agency Information Collection Activities; Proposed Collection; Public Comment Request

AGENCY: Office of the Secretary, HHS.

ACTION: Notice.

SUMMARY: In compliance with section 3506(c)(2)(A) of the Paperwork Reduction Act of 1995, the Office of the Secretary (OS), Department of Health and Human Services, announces plans to submit a new Information Collection Request (ICR), described below, to the Office of Management and Budget (OMB). Prior to submitting that ICR to OMB, OS seeks comments from the public regarding the burden estimate, below, or any other aspect of the ICR.

DATES: Comments on the ICR must be received on or before May 28, 2013.

ADDRESSES: Submit your comments to *Information.CollectionClearance@hhs.gov* or by calling (202) 690–6162.

FOR FURTHER INFORMATION CONTACT: Information Collection Clearance staff, *Information.CollectionClearance@hhs.gov* or (202) 690–6162.

SUPPLEMENTARY INFORMATION: When submitting comments or requesting information, please include the document identifier HHS–OS–19158–60D for reference.

Information Collection Request Title: Doing It For Ourselves (DIFO) Program.

Abstract: The Office of Women's Health (OWH) and the Department of Health and Human Services (HHS) Coordinating Committee on Lesbian, Gay, Bi-sexual and Transgender (LGBT) Issues have prioritized the collection of health data on LGBT populations. In response, OWH funded an initiative to identify and test effective and innovative ways of reducing obesity in lesbian and bisexual women. The DIFO intervention has been developed in San Francisco to address what is known about local LB women's community norms, common barriers to health, patterns of physical and mental health access, and preferences for health services and health outcomes. The evaluation of the DIFO program will address the following research question: Does an intervention based on an ecological model of LB women's health result in improved health, as defined by: quality of life, decreased weight, improved nutrition, and increased physical activity? The project is scheduled for one year.

Need and Proposed Use of the Information: Addresses barriers to health for the LB community, and promotes overall health and wellbeing. The intervention will incorporate community-identified weight loss/risk reduction needs of this population. Following the completion of the surveys and interventions, collected data will be used to develop increased health-related services and activities for LB women, web-based tools and materials for LB women, increased community recreation resources inclusive of sexual minority women.

Likely Respondents: Lesbian and bi-sexual women forty years of age and older.

Burden Statement: Burden in this context means the time expended by persons to generate, maintain, retain, disclose or provide the information requested. This includes the time needed to review instructions, to develop, acquire, install and utilize technology and systems for the purpose of collecting, validating and verifying information, processing and maintaining information, and disclosing and providing information, to train personnel and to be able to respond to a collection of information, to search data sources, to complete and review the collection of information, and to transmit or otherwise disclose the information. The total annual burden hours estimated for this ICR are summarized in the table below.

TOTAL ESTIMATED ANNUALIZED BURDEN—HOURS

Forms	Number of respondents	Number of responses per respondent	Average burden hours per response	Total burden hours
Screening Tool	300	1	5/60	25
Informed Consent Form	256	1	5/60	21
Baseline Survey	128	1	5/60	11
Baseline Comparison Survey	128	1	5/60	11
9 Month Follow-up Survey	128	1	5/60	11
9- Month Follow-Up Comparison Survey	128	1	5/60	11
End-of-Program Focus Group	128	1	1	128
Total				218

OS specifically requests comments on (1) the necessity and utility of the proposed information collection for the proper performance of the agency's functions, (2) the accuracy of the estimated burden, (3) ways to enhance the quality, utility, and clarity of the information to be collected, and (4) the use of automated collection techniques or other forms of information technology to minimize the information collection burden.

Keith A. Tucker,

Information Collection Clearance Officer.

[FR Doc. 2013–07144 Filed 3–27–13; 8:45 am]

BILLING CODE 4150–33–P

DEPARTMENT OF HEALTH AND HUMAN SERVICES

Centers for Disease Control and Prevention

[60Day-13–13OE]

Proposed Data Collections Submitted for Public Comment and Recommendations

In compliance with the requirement of Section 3506(c)(2)(A) of the Paperwork Reduction Act of 1995 for opportunity for public comment on proposed data collection projects, the Centers for Disease Control and Prevention (CDC) will publish periodic summaries of proposed projects. To request more information on the proposed projects or to obtain a copy of the data collection plans and instruments, call 404–639–7570 or send comments to Ron Otten, 1600 Clifton Road, MS–D74, Atlanta, GA 30333 or send an email to *omb@cdc.gov.*

Comments are invited on: (a) Whether the proposed collection of information is necessary for the proper performance of the functions of the agency, including whether the information shall have practical utility; (b) the accuracy of the agency's estimate of the burden of the proposed collection of information; (c) ways to enhance the quality, utility, and clarity of the information to be collected; and (d) ways to minimize the burden of the collection of information on respondents, including through the use of automated collection techniques or other forms of information technology. Written comments should be received within 60 days of this notice.

Proposed Project

Cytology Workload Assessment and Measure—New—Office of Surveillance, Epidemiology and Laboratory (OSELS), Centers for Disease Control and Prevention (CDC).

Background and Brief Description

CDC provides technical guidance to the Department of Health and Human Services (HHS) in coordination with the Centers for Medicare & Medicaid Services (CMS) and the Food and Drug Administration (FDA) for the implementation of the Clinical Laboratory Improvement Amendments (CLIA). The Clinical Laboratory Improvement Amendments of 1988 directed the Secretary of Health and Human Services to establish the maximum number of cytology slides that any individual may screen in a 24 hour period; to establish certain quality assurance standards; to set personnel standards; and to provide for periodic proficiency testing of cytotechnologists and pathologists involved in screening and interpreting cytological preparations. The regulations implementing CLIA, published in the **Federal Register** of February 28, 1992, established that the maximum number of slides examined by an individual in each 24 hour period was not to exceed 100 slides and could not be examined in less than an eight-hour day. The regulation further established that the technical supervisor is required to evaluate the performance of cytotechnologists at least every six months and determine their individual maximum daily workload limit. CDC requests OMB approval to collect information on cytology workload practice assessment through a survey on workflow and performance practices of cytotechnologists. Clearance is being requested for one year.

In 1992, when the regulation was published, all Pap slides were conventional ''Pap smears.'' In a conventional Pap smear, samples are smeared directly onto a glass

microscope slide after collection. The cells are often obscured by blood or the smear may be too thick and contain contaminating artifacts. Today, almost all Pap tests in the U.S. are collected with a liquid-based method. Instead of ''smearing'' cervical cells directly onto a glass microscope slide, the cells are sent to the laboratory in a liquid preservative and processed by an automated processor. This processor disperses a uniform thickness representative sample on the slide that is free of obscuring blood, mucus, and non-diagnostic debris in a circle that covers less than one half of the slide.

The Federal Advisory Committee for CLIA, the Clinical Laboratory Improvement Advisory Committee (CLIAC) has discussed cytology workload on numerous occasions from 1996 until present. The first workgroup was convened in July 1999 to provide input on how to determine workload for liquid-based Pap slides. The workgroup suggested it would be impossible to select one number that would be appropriate for all technology since automated and semi-automated screening devices were in development and approval by FDA might occur in the near future. In 2003, the CLIA requirements were amended to require the manufacturer of a semi-automated screening device to include a maximum workload number in the product insert, rather than set a number in the CLIA regulations.

The same year the amended regulations were made final, the first semi-automated device was approved which further reduced the area of screening by the cytotechnologist by using an automated review microscope to present the cytotechnologist with a set number of fields of view (FOV). This further complicated workload counting since it should take less time to review the FOVS than it would take to manually review the entire circle of the liquid-based preparation. Currently, two systems are FDA-approved, the Hologic ThinPrep® Imaging System and Becton Dickinson's Focal Point™ Guided Screening System. The product insert for both devices includes a method of counting slides where slides screened on the automated review microscope will be counted as half (0.5) and a full manual review of the entire circle will be counted as one (1) slide. CMS and FDA conducted an investigation into problems reported by surveyors of cytology laboratories regarding the two FDA-approved semi-automated screening devices. The investigation led to a different method for calculation of workload than the methods reported in the product inserts. This information was presented at the September 2010 CLIAC meeting and FDA issued an alert—*How Laboratorians Can Safely Calculate Workload for FDA-Approved Semi-Automated Gynecologic Cytology Screening Devices.* In this alert, it stated laboratories should have a clear standard operation procedure documenting the method of workload counting and explaining how the Technical Supervisor should establish workload limits for each individual. Also, the alert clarified how workload should be calculated when using either the Hologic's ThinPrep® Imaging System or Becton Dickinson's Focal Point™ Guided Screening System:

- All slides with full manual review (FMR) count as 1 slide (as mandated by CLIA's requirements for manual screening)
- All slides with only field of view (FOV) review count as 0.5 or ½ slide
- Then, slides with both FOV and FMR count as 1.5 or 1½ slides
- Use these values to count workload, which should not exceed the CLIA maximum limit of 100 slides in no less than an 8-hour day.

On August 29, 2011 the American Society of Cytopathology's (ASC) Executive Board approved an ASC task force recommendation that the average laboratory cytotechnologist productivity should not exceed 70 slides and that an individual's screening time should not exceed seven (7) hours in a 24 hour period. This recommendation was presented at the ASC 2011 annual meeting and was endorsed unanimously by the Cytology Education and Technology Consortium member organizations: American Society for Clinical Pathology, American Society for Cytotechnology, American Society of Cytopathology, and Papanicolaou Society of Cytopathology. The College of American Pathologists also acknowledged that the current workload limits for image assisted screening devices may be set too high for the average cytotechnologist, but that further study was needed to define best practices for semi-automated gynecologic workload limits.

The ASC Taskforce recommendation was presented at the February 2012 CLIAC meeting along with presentations describing workload studies and use of the workload limit as a target. The committee issued a recommendation that CLIAC supports the use of data from operational studies, such as those presented to CLIAC, to determine if the maximum workload limit using semi-automated screening instruments is appropriate and to discourage the use of regulatory maximum workload limits as productivity targets. CLIAC recommended that standardized criteria be developed for use in determining workload limits for each individual performing screening.

Due to ongoing concerns regarding the appropriateness of the regulatory 100-slide maximum workload limit and lack of a standardized method for counting slides using the semi-automated screening devices, a study is needed to directly assess actual practice. The study needs to include a survey of laboratory practices related to setting individual workload limits. The survey will include questions regarding the maximum workload number of slides for each cytotechnologist employed in the cytology laboratory and how the slides are counted for workload purposes. Since the technical supervisor is required by CLIA to reevaluate the maximum workload number for each individual every six months and to determine policies for workflow and performance practices reporting this information, it is anticipated that the survey may be completed in 30 minutes.

The results of this practice assessment will be used by DLSS/CDC to assist in the development of protocols for a time measurement study to determine the actual time spent screening slides. The results of this practice assessment and the time measure study may be used by HHS agencies responsible for CLIA to determine appropriate gynecologic screening workload maximums using semi-automated devices.

Each laboratory will receive an advance request to participate in the survey from a DLSS contractor that has been selected to collect the survey data and conduct the time measure study. Respondents will be from the 1,245 cytology laboratories in the United States. Since a response to this survey is voluntary, we would expect an 80% response rate or approximately 996 laboratories. Responses would be submitted using an electronic web-based interface or in written format. The estimated burden per response is thirty minutes.

CDC expects that information collection will begin in November 2013 and end February 2014.

There are no costs to respondents other than their time.

ESTIMATED ANNUALIZED BURDEN HOURS

Type of respondents	Form name	No. of respondents	No. of responses per respondent	Avg. burden per response (in hrs.)	Total burden (in hrs.)
Cytology laboratories	Cytology Workload Assessment	996	1	30/60	498
Total					498

Dated: March 21, 2013.

Ron A. Otten,

Director, Office of Scientific Integrity, Office of the Associate Director for Science, Office of the Director, Centers for Disease Control and Prevention.

[FR Doc. 2013–07233 Filed 3–27–13; 8:45 am]

BILLING CODE 4163–18–P

DEPARTMENT OF HEALTH AND HUMAN SERVICES

Centers for Disease Control and Prevention

[60-Day-13–0861]

Proposed Data Collections Submitted for Public Comment and Recommendations

In compliance with the requirement of Section 3506(c)(2)(A) of the Paperwork Reduction Act of 1995 for opportunity for public comment on proposed data collection projects, the Centers for Disease Control and Prevention (CDC) will publish periodic summaries of proposed projects. To request more information on the proposed projects or to obtain a copy of the data collection plans and instruments, call 404–639–7570 or send comments to Ron Otten, 1600 Clifton Road, MS–D74, Atlanta, GA 30333 or send an email to *omb@cdc.gov*.

Comments are invited on: (a) Whether the proposed collection of information is necessary for the proper performance of the functions of the agency, including whether the information shall have practical utility; (b) the accuracy of the agency's estimate of the burden of the proposed collection of information; (c) ways to enhance the quality, utility, and clarity of the information to be collected; and (d) ways to minimize the burden of the collection of information on respondents, including through the use of automated collection techniques or other forms of information technology. Written comments should be received within 60 days of this notice.

Proposed Project

A Controlled Evaluation of Expect Respect Support Groups (ERSG): Preventing and Interrupting Teen Dating Violence among At-Risk Middle and High School Students (OMB No. 0920–0861, Expiration 8/31/2013)—Extension—National Center for Injury Prevention and Control (NCIPC), Centers for Disease Control and Prevention (CDC).

Background and Brief Description

The purpose of this request is to obtain Office of Management and Budget (OMB) approval to extend the data collection for A Controlled Evaluation of Expect Respect Support Groups (ERSG): Preventing and Interrupting Teen Dating Violence among At-Risk Middle and High School Students (OMB No.0920–0861, Expiration 8/31/2013). CDC seeks a three-year extension in order to continue: 1) evaluating the effectiveness of Expect Respect Support Groups (ERSG) in preventing and reducing teen dating violence and 2) comparing whether there are increased healthy conflict resolution skills reported by at-risk male and female middle and high school students participating in ERSG, compared to at-risk students in control schools who do not receive ERSG.

The prevalence and consequences of teen dating violence make it a public health concern that requires early and effective prevention. To date, only three prevention strategies—Safe Dates, the Youth Relationships Project, and 4th R—have demonstrated reductions in dating violence behaviors in rigorous, controlled evaluations. In order to protect young people and build an evidence-base of effective prevention strategies, evaluation of additional programs is needed, including those programs currently in the field. The Expect Respect Support Groups (ERSG; provided by SafePlace) program is currently being implemented in the Austin Independent School District and demonstrated promising results in an uncontrolled program evaluation, suggesting a controlled evaluation is warranted to more rigorously examine program effects.

The extension request to the controlled evaluation of ERSG, which began in September 2010, has one primary aim and two exploratory aims. The primary aim is to evaluate the effectiveness of ERSG to prevent and reduce teen dating violence and increase healthy conflict resolution skills reported by at-risk male and female middle and high school students compared to at-risk students in control schools who do not receive ERSG. The exploratory aims are: (1) To evaluate whether or not the effectiveness of ERSG is enhanced by the presence of a universal, school-wide prevention programs, and (2) To examine moderators and mediators of targeted and universal teen dating violence interventions, such as biological sex and history of abuse at intake. Completion of this study and examination of the primary and exploratory aims associated with it will help to fill a research gap by adding results to the evidence base regarding whether ERSG is a promising program for reducing the prevalence of teen dating violence and increasing knowledge of healthy relationship skills.

The ongoing evaluation employs a quasi-experimental/non-randomized design in which a convenience sample of participants in schools receiving universal and/or targeted prevention services are compared to students in control schools in which no dating violence prevention services are available.

Based on the previous two years of data collection for the ERSG evaluation, we anticipate that in the Austin Independent School District, 800 middle and high school students will undergo an intake assessment, of whom 600 at-risk students (i.e., students who indicate they have been exposed to violence in the home, community, or in dating or peer relationships) will be eligible for ERSG, of whom 400 will complete the baseline and completion assessments. Therefore, we will recruit 1,800 students (300 per year from intervention schools and 300 per year from control schools) over three waves of data collection. Of the 1,800 students recruited, we anticipate 1200 will have complete data at the end of the study period. Control schools have been selected that have characteristics (e.g., risk status, socio-economic status) similar to the Austin Independent School District intervention schools.

Survey items collect information about emotional, physical, and sexual peer and dating violence victimization and perpetration, use of healthy relationship skills, relationships characteristics, peer relationships, demographics, use of other teen dating violence prevention services, social desirability, and attitudes toward dating violence. These measures were developed in collaboration with scientists at the Centers for Disease Control and Prevention and (1) are adapted from validated measures of teen dating violence, and (2) reflect the behaviors of interest and theory of change of Expect Respect. The Reactive Proactive Questionnaire (Raine et al., 2006) has also been included in the instrument packet and will be used to determine if subtype of aggression moderates response to intervention.

Participation in this study is voluntary and intrusions to the participants' sense of privacy will be minimized by only using data collected from students who have agreed for us to do so (through student assent and signed distribution of passive parental consent forms) and having the data coded in such a way to protect subjects' confidentiality.

There are no costs to respondents other than their time.

Type of respondent	Form name	No. of respondents	No. of responses per respondent	Response burden (in hours)	Total burden hours
Control Schools (School districts surrounding Austin.	Intake assessment	400	1	15/60	100
	Baseline Survey	300	1	1	300
	Completion Survey	200	1	1	200
Independent School District)	Follow-up Survey 1 (12 month)	200	1	1	200
Intervention Schools (Austin Independent School District).	Intake assessment	400	1	15/60	100
	Baseline Survey	300	1	1	300
	Completion Survey	200	1	1	200
	Follow-up Survey 1 (12 month)	200	1	1	200
ERSG Facilitator	ERSG Facilitator Program Implementation Fidelity Measure.	8	2	15/60	4
ERSG Facilitator Supervisor	ERSG Observational Program Implementation Fidelity Measure.	1	16	15/60	4
ERSG Facilitator	Mid-Year Qualitative Interview with ERSG Facilitators.	8	1	45/60	6
ERSG Facilitator	End of Year Qualitative Interview with ERSG Facilitators.	8	1	1	8
Total					1622

Dated: March 21, 2013.

Ron A. Otten,

Director, Office of Scientific Integrity, Office of the Associate Director for Science, Office of the Director, Centers for Disease Control and Prevention.

[FR Doc. 2013–07232 Filed 3–27–13; 8:45 am]

BILLING CODE 4163–18–P

DEPARTMENT OF HEALTH AND HUMAN SERVICES

Centers for Disease Control and Prevention

[60Day-13–0733]

Proposed Data Collections Submitted for Public Comment and Recommendations

In compliance with the requirement of Section 3506(c)(2)(A) of the Paperwork Reduction Act of 1995 for opportunity for public comment on proposed data collection projects, the Centers for Disease Control and Prevention (CDC) will publish periodic summaries of proposed projects. To request more information on the proposed projects or to obtain a copy of the data collection plans and instruments, call 404–639–7570 or send comments to Ron Otten, at 1600 Clifton Road, MS–D74, Atlanta, GA 30333 or send an email to *omb@cdc.gov.*

Comments are invited on: (a) Whether the proposed collection of information is necessary for the proper performance of the functions of the agency, including whether the information shall have practical utility; (b) the accuracy of the agency's estimate of the burden of the proposed collection of information; (c) ways to enhance the quality, utility, and clarity of the information to be collected; and (d) ways to minimize the burden of the collection of information on respondents, including through the use of automated collection techniques or other forms of information technology. Written comments should be received within 60 days of this notice.

Proposed Project

CDC Early Hearing Detection and Intervention Hearing Screening and Follow-up Survey (OMB No. 0920–0733, Expiration 06/30/2013)—Reinstatement with Change—National Center on Birth Defects and Developmental Disabilities (NCBDDD), Centers for Disease Control and Prevention (CDC).

Background and Brief Description

The National Center on Birth Defects and Developmental Disabilities at CDC promotes the health of babies, children, and adults with disabilities. As part of these efforts the Center is actively involved in addressing hearing loss (HL) among newborns and infants. HL is a common birth defect that affects approximately 12,000 infants each year and, when left undetected, can result in developmental delays. As awareness about infant HL increases, so does the demand for accurate information about rates of screening, referral, loss to follow-up, and prevalence. This information is important for helping to ensure infants and children are receiving recommended screening and follow-up services, documenting the occurrence of differing degrees of HL among infants, and assessing progress towards national goals. These data will also assist state Early Hearing Detection and Intervention (EHDI) programs with quality improvement activities and provide information that will be helpful in assessing the impact of federal initiatives. The public will be able to

access this information via the CDC EHDI Web site (*www.cdc.gov/ncbddd/hearingloss/ehdi-data.html*).

Given the lack of a standardized and readily accessible source of data, the CDC EHDI program developed a survey to be used annually that utilizes uniform definitions to collect aggregate, standardized EHDI data from states and territories. The request to complete this survey is planned to be disseminated to respondents via an email, which will include a summary of the request and other relevant information. Minor changes to this survey, based on respondent feedback, are planned in order to make the survey easier to complete and further improve data quality. These changes include splitting the previously combined question about the number of infants that were non-residents or moved out jurisdiction into two separate questions and adding new questions. These include questions about how many infants were in a neonatal intensive care unit for more than 5 days, transferred without any documentation of a hearing screening, unable to be screened or receive diagnostic testing due to a medical reason, number of cases where a primary care physician did not refer an infant for diagnostic testing, and cases of permanent hearing loss among non-resident infants. The table for reporting type and severity of hearing loss data has also been updated so this data can be reported using either the classification system from the American Speech and Hearing Association or the current system from the Directors of Speech and Language Programs in State Health and Welfare Agencies.

A total of 59 respondents will be asked to complete the updated data request each year during the 3-year requested data collection approval timeframe. Based on findings from the previous information collection, it is estimated that the burden for individuals to read through the survey and decide whether or not to complete it is 10 minutes per person. The 10 minute calculation was based on feedback received in pre-tests with 5 individuals and confirmed by the experience with the survey since the original Office of Management and Budget (OMB) approval.

It is expected that 55 of the 59 potential respondents will complete the survey and therefore incur an additional burden of up to 4 hours per respondent. However, based on feedback from consulted experts about the length of time required to complete the original information collection it is anticipated that it will only take some respondents a few minutes to complete the revised data request. This is because jurisdictions often have already gathered and compiled the requested data for their own internal uses. Nevertheless, the more conservative time estimate of 4 hours per response from each of the 55 anticipated participants is shown in the table below. The estimated annualized burden is 230 hours. This estimate is identical to the time estimate for the reinstated OMB approved estimate from 2010; the only change is the estimated number of respondents. There are no costs to the respondents other than their time.

ESTIMATED ANNUALIZED BURDEN HOURS

Respondents	Form name	No. of respondents	No. of responses per respondent	Average burden per response (in hours)	Total burden (in hours)
State and territory EHDI Program Coordinators.	Survey Directions	59	1	10/60	10
EHDI Program State Program Coordinators.	Survey	55	1	4	220
TOTAL					230

Dated: March 21, 2013.

Ron A. Otten,

Director, Office of Scientific Integrity, Office of the Associate Director for Science, Office of the Director, Centers for Disease Control and Prevention.

[FR Doc. 2013–07230 Filed 3–27–13; 8:45 am]

BILLING CODE 4163–18–P

DEPARTMENT OF HEALTH AND HUMAN SERVICES

Centers for Disease Control and Prevention

Statement of Organization, Functions, and Delegations of Authority

Part C (Centers for Disease Control and Prevention) of the Statement of Organization, Functions, and Delegations of Authority of the Department of Health and Human Services (45 FR 67772–76, dated October 14, 1980, and corrected at 45 FR 69296, October 20, 1980, as amended most recently at 78 FR 5812, dated January 28, 2013) is amended to reflect the reorganization of the Office of the Associate Director for Science, Office of the Director, Centers for Disease Control and Prevention.

Section C–B, Organization and Functions, is hereby amended as follows:

Revise the functional statement for the Office of Science Quality (CASH), as follows:

After item (11), insert the following: (12) Plans, develops, coordinates, and manages policies and/or activities that assure CDC intellectual property transfer, scientific training and technical assistance, critical external laboratory partnerships and the provision of essential laboratory services; (13) transfers and translates research findings, technologies, and information from CDC's laboratory and science in practice recommendations; and (14) manages CDC's intellectual property (e.g., patents, trademarks, copyrights) and promotes the transfer of new technology from CDC research to the private sector to facilitate and enhance the development of diagnostic products, vaccines, and products to improve occupational safety

Dated: March 7, 2013.

Sherri A. Berger,

Chief Operating Officer, Centers for Disease Control and Prevention.

[FR Doc. 2013–07102 Filed 3–27–13; 8:45 am]

BILLING CODE 4160–18–M

DEPARTMENT OF HEALTH AND HUMAN SERVICES

Food and Drug Administration

[Docket No. FDA–2010–D–0636]

Establishing the Performance Characteristics of In Vitro Diagnostic Devices for the Detection of Antibodies to Borrelia burgdorferi; Guidance for Industry and Food and Drug Administration Staff; Availability

AGENCY: Food and Drug Administration, HHS.

ACTION: Notice.

SUMMARY: The Food and Drug Administration (FDA) is announcing the availability of the guidance entitled ''Establishing the Performance Characteristics of In Vitro Diagnostic Devices for the Detection of Antibodies to *Borrelia burgdorferi.''* FDA is issuing this guidance to provide industry and Agency staff with recommendations for studies to establish the analytical and clinical performance of in vitro diagnostic devices (IVDs) intended for the detection of antibodies to *B. burgdorferi.* These devices are used to aid in the diagnosis of Lyme disease.

DATES: Submit either electronic or written comments on this guidance at any time. General comments on Agency guidance documents are welcome at any time.

ADDRESSES: Submit written requests for single copies of the guidance document entitled ''Establishing the Performance Characteristics of In Vitro Diagnostic Devices for the Detection of Antibodies to *Borrelia burgdorferi''* to the Division of Small Manufacturers, International and Consumer Assistance, Center for Devices and Radiological Health, Food and Drug Administration, 10903 New Hampshire Ave., Bldg. 66, Rm. 4613, Silver Spring, MD 20993–0002. Send one self-addressed adhesive label to assist that office in processing your request, or fax your request to 301–847–8149. See the **SUPPLEMENTARY INFORMATION** section for information on electronic access to the guidance.

Submit electronic comments on the guidance to *http://www.regulations.gov.* Submit written comments to the Division of Dockets Management (HFA–305), Food and Drug Administration, 5630 Fishers Lane, Rm. 1061, Rockville, MD 20852. Identify comments with the docket number found in brackets in the heading of this document.

FOR FURTHER INFORMATION CONTACT: Prasad Rao, Center for Devices and Radiological Health, Food and Drug Administration, 10903 New Hampshire Ave., Bldg. 66, Rm. 5508, Silver Spring, MD 20993, 301–796–6203.

SUPPLEMENTARY INFORMATION:

I. Background

This guidance recommends studies for establishing the performance characteristics of in vitro diagnostic devices for the detection of antibodies to *B. burgdorferi* in human serum, plasma, and blood. These devices are used to aid in the diagnosis of Lyme disease. This document does not apply to *B. burgdorferi* nucleic acid amplification assays. A manufacturer who intends to market an in vitro device for the detection of antibodies to *B. burgdorferi* must conform to the general controls of the Federal Food, Drug, and Cosmetic Act and, unless exempt, obtain premarket clearance or approval prior to marketing the device.

The draft guidance was announced in the **Federal Register** of January 5, 2011 (76 FR 570), and the comment period closed on April 5, 2011. No comments were received during the comment period.

II. Significance of Guidance

This guidance is being issued consistent with FDA's good guidance practices regulation (21 CFR 10.115). The guidance represents the Agency's current thinking on establishing the performance characteristics of in vitro diagnostic devices for the detection of antibodies to *B. burgdorferi.* It does not create or confer any rights for or on any person and does not operate to bind FDA or the public. An alternative approach may be used if such approach satisfies the requirements of the applicable statute and regulations.

III. Electronic Access

Persons interested in obtaining a copy of the guidance may do so by using the Internet. A search capability for all CDRH guidance documents is available at *http://www.fda.gov/MedicalDevices/DeviceRegulationandGuidance/GuidanceDocuments/default.htm.* Guidance documents are also available at *http://www.regulations.gov.* To receive ''Establishing the Performance Characteristics of In Vitro Diagnostic Devices for the Detection of Antibodies to *Borrelia burgdorferi,''* you may either send an email request to *dsmica@fda.hhs.gov* to receive an electronic copy of the document or send a fax request to 301–847–8149 to receive a hard copy. Please use the document number 1721 to identify the guidance you are requesting.

IV. Paperwork Reduction Act of 1995

This guidance refers to previously approved collections of information found in FDA regulations. These collections of information are subject to review by the Office of Management and Budget (OMB) under the Paperwork Reduction Act of 1995 (44 U.S.C. 3501–3520). The collections of information in 21 CFR part 807, subpart E, have been approved under OMB control number 0910–0120; the collections of information in 21 CFR part 801 and 21 CFR 809.10 have been approved under OMB control number 0910–0485; the collections of information in 21 CFR part 812 have been approved under OMB control number 0910–0078; the collections of information in 42 CFR 493.15 have been approved under OMB control number 0910–0598; the collections of information 21 CFR 50.23 have been approved under OMB control number 0910–0586; and the collections of information in 21 CFR 56.115 have been approved under OMB control number 0910–0130.

V. Comments

Interested persons may submit either electronic comments regarding this document to *http://www.regulations.gov* or written comments to the Division of Dockets Management (see **ADDRESSES**). It is only necessary to send one set of comments. Identify comments with the docket number found in brackets in the heading of this document. Received comments may be seen in the Division of Dockets Management between 9 a.m. and 4 p.m., Monday through Friday, and will be posted to the docket at *http://www.regulations.gov.*

Dated: March 22, 2013.

Leslie Kux,

Assistant Commissioner for Policy.

[FR Doc. 2013–07085 Filed 3–27–13; 8:45 am]

BILLING CODE 4160–01–P

DEPARTMENT OF HEALTH AND HUMAN SERVICES

Health Resources and Services Administration

Agency Information Collection Activities; Proposed Collection; Comment Request

ACTION: Notice.

SUMMARY: In compliance with the requirement for opportunity for public comment on proposed data collection projects (Section 3506(c)(2)(A) of Title 44, United States Code, as amended by the Paperwork Reduction Act of 1995, Pub. L. 104–13), the Health Resources

and Services Administration (HRSA) publishes periodic summaries of proposed projects being developed for submission to the Office of Management and Budget (OMB) under the Paperwork Reduction Act of 1995. To request more information on the proposed project or to obtain a copy of the data collection plans and draft instruments, email *paperwork@hrsa.gov* or call the HRSA Reports Clearance Officer at (301) 443–1984.

HRSA especially requests comments on: (1) The necessity and utility of the proposed information collection for the proper performance of the agency's functions, (2) the accuracy of the estimated burden, (3) ways to enhance the quality, utility, and clarity of the information to be collected, and (4) the use of automated collection techniques or other forms of information technology to minimize the information collection burden.

Information Collection Request Title: The Health Education Assistance Loan (HEAL) Program: Physician's Certification of Borrower's Total and Permanent Disability Form (OMB No. 0915–0204)–Extension

Abstract: The Health Education Assistance Loan (HEAL) program provided federally-insured loans to students in schools of allopathic medicine, osteopathic medicine, dentistry, veterinary medicine, optometry, podiatric medicine, pharmacy, public health, allied health, or chiropractic, and graduate students in health administration or clinical psychology through September 30, 1998. Eligible lenders, such as banks, savings and loan associations, credit unions, pension funds, state agencies, HEAL schools, and insurance companies, made new refinanced HEAL loans which are insured by the federal government against loss due to borrower's death, disability, bankruptcy, and default. The basic purpose of the program was to assure the availability of funds for loans to eligible students who needed to borrow money to pay for their educational loans. Currently, the program monitors the federal liability and assists in default prevention activities.

The HEAL borrower, the borrower's physician, and the holder of the loan complete the Physician's Certification form to certify that the HEAL borrower meets the total and permanent disability provisions. The Department uses this form to obtain detailed information about disability claims which includes the following: (1) The borrower's consent to release medical records to the Department of Health and Human Services and to the holder of the borrower's HEAL loans; (2) pertinent information supplied by the certifying physician; (3) the physician's certification that the borrower is unable to engage in any substantial gainful activity because of a medically determinable impairment that is expected to continue for a long and indefinite period of time or to result in death; and (4) information from the lender on the unpaid balance. Failure to submit the required documentation will result in disapproval of a disability claim. No changes have been made to the current form.

Burden Statement: Burden in this context means the time expended by persons to generate, maintain, retain, disclose or provide the information requested. This includes the time needed to review instructions, to develop, acquire, install and utilize technology and systems for the purpose of collecting, validating and verifying information, processing and maintaining information, and disclosing and providing information, to train personnel and to be able to respond to a collection of information, to search data sources, to complete and review the collection of information, and to transmit or otherwise disclose the information. The total annual burden hours estimated for this Information Collection Request are summarized in the table below.

The annual estimate of burden is as follows:

Type of respondent	Number of respondents	Number of responses per respondent	Total responses	Average burden per response (in hours)	Total burden hours
Borrower	75	1	75	.08	6
Physician	75	1	75	.5	38
Holder of Loan	13	6	78	.17	13
Total	163		228		57

ADDRESSES: Submit your comments to *paperwork@hrsa.gov* or mail the HRSA Reports Clearance Officer, Room 10–29, Parklawn Building, 5600 Fishers Lane, Rockville, MD 20857.

Deadline: Comments on this Information Collection Request must be received within 60 days of this notice.

Dated: March 20, 2013.

Bahar Niakan,

Director, Division of Policy and Information Coordination.

[FR Doc. 2013–07190 Filed 3–27–13; 8:45 am]

BILLING CODE 4165–15–P

DEPARTMENT OF HEALTH AND HUMAN SERVICES

Health Resources and Services Administration

Ryan White HIV/AIDS Program, Part C Early Intervention Services Grant Under the Ryan White HIV/AIDS Program

AGENCY: Health Resources and Services Administration (HRSA), Department of Health and Human Services.

ACTION: Notice of Ryan White HIV/AIDS Program Part C Early Intervention Services One-Time Noncompetitive Award to Ensure Continued HIV Primary Medical Care.

SUMMARY: To prevent a lapse in comprehensive primary care services for persons living with HIV/AIDS, HRSA will provide a one-time noncompetitive Part C funds award to the University of Alabama at Birmingham (UAB).

SUPPLEMENTARY INFORMATION: The amount of the award to ensure ongoing HIV medical services is $1,283,907.

Authority: Section 2651 of the Public Health Service Act, 42 U.S.C. 300ff–51

CFDA Number: 93.918.

Project period: The period of support for this award is 17 months, explained below in further detail.

Justification for the Exception To Competition: The Jefferson County Commission, Birmingham, AL (Grant Number: H76HA00098) announced the relinquishment of their Part C grant on January 31, 2013. To prevent a lapse in HIV medical care to the service area covered by that grant, grant funds of

$1,283,907 are to be awarded to UAB to provide interim HIV medical care. UAB is a Ryan White HIV/AIDS Part C funded organization (H76HA00578), which offers HIV medical primary care. The Jefferson County Commission has identified UAB as a successor for the Part C grant. The $1,283,907 represents a proportional share of the last award to the Jefferson County Commission to cover 17 months of HIV medical primary care services until the service area is competed by July 1, 2014.

FOR FURTHER INFORMATION CONTACT: John Fanning, by email at *jfanning@hrsa.gov,* or by phone at 301–443–0493.

Dated: March 22, 2013.

Mary K. Wakefield,

Administrator.

[FR Doc. 2013–07189 Filed 3–27–13; 8:45 am]

BILLING CODE 4165–15–P

DEPARTMENT OF HEALTH AND HUMAN SERVICES

Indian Health Service

Medical Professionals Recruitment and Continuing Education Programs

Announcement Type: New Limited Competition Cooperative Agreement.

Funding Announcement Number: HHS–2013–IHS–HPR–0001.

Catalog of Federal Domestic Assistance Number: 93.970.

Key Dates

Application Deadline Date: April 30, 2013.

Review Date: May 13, 2013.

Earliest Anticipated Start Date: May 30, 2013.

Proof of Non-Profit Status Due Date: April 30, 2013.

I. Funding Opportunity Description

Statutory Authority

The Indian Health Service (IHS) Office of Clinical and Preventive Services (OCPS) is accepting competitive cooperative agreement applications for support for medical professionals' recruitment and continuing education programs. This program is authorized under the Snyder Act, 25 U.S.C. 13. This program is described in the Catalog of Federal Domestic Assistance under 93.970.

Background

The mission of the IHS is to raise the physical, mental, social, and spiritual health of American Indians and Alaska Natives (AI/AN) to the highest level. The IHS, an agency within the Department of Health and Human Services (HHS), is responsible for providing Federal health services to AI/AN. The provision of health services to members of Federally-recognized Tribes grew out of the special government-to-government relationship between the Federal Government and Indian Tribes. The IHS is the principal Federal health care provider and health advocate for Indian people and its mission is to raise their health status to the highest possible level. The IHS provides a comprehensive health service delivery system for approximately 1.9 million AI/AN who belong to 566 Federally recognized Tribes in 35 states.

Purpose

The purpose of this IHS cooperative agreement is to enhance medical professional recruitment and continuing education programs, services and activities for AI/AN people. The agency wants to facilitate continuing medical education for AI/AN physicians through annual meetings and other venues that are culturally competent and sensitive. Another purpose is to recruit AI/AN health professionals to pursue jobs that serve AI/AN people and improve the health care delivery system. A third purpose is to provide opportunities for AI/AN youth to learn about the various Federal agencies and possible careers within the Federal Government that will result in a national mentoring program and creation of a pipeline for AI/AN youth into health careers. These activities should result in more AI/AN youth pursuing careers in the health professions thereby increasing the number of AI/AN medical professionals in the workforce.

Limited Competition Justification

Competition is limited to organizations with expertise in advancing the health of AI/AN people. This limitation is necessary in order for IHS to ensure that the training, education, and outreach provided through this award are provided in a culturally competent manner. Additionally, applicants must have experience hosting healthcare forums and meetings combining modern medicine and traditional healing practices to enhance health care delivery to AI/AN communities. Through such experience, applicants should have existing relationships with stakeholders that will encourage attendance at the meeting funded through this award. Applicants must offer educational programs, services and activities specifically tailored to motivating AI/AN students to remain in the academic pipeline and to pursue a career in the health professions and/or biomedical research. Finally, applicants must have experience in providing leadership and programs in various care arenas affecting AI/AN, such as diabetes mellitus, human immunodeficiency virus/acquired immunodeficiency syndrome (HIV/AIDS), domestic violence and methamphetamine use, in order to address the most pressing healthcare needs of AI/AN communities.

II. Award Information

Type of Award

Cooperative Agreement.

Estimated Funds Available

The total amount of funding identified for the current fiscal year, FY 2013, is approximately $25,000. The award is for three years with $25,000 available for each year for a total funding amount of $75,000 for the three-year project period. All competing and continuation awards issued under this announcement are subject to the availability of funds. In the absence of funding, the IHS is under no obligation to make any awards selected for funding under this announcement.

Anticipated Number of Awards

One limited competition award will be issued under this program announcement.

Project Period

The project period will be for 3 years from March 1, 2013 to February 29, 2016.

Cooperative Agreement

In HHS, a cooperative agreement is administered under the same policies as a grant. The funding agency (IHS) is required to have substantial programmatic involvement in the project during the entire award segment. Below is a detailed description of the level of involvement required for both IHS and the grantee. IHS will be responsible for activities listed under section A and the grantee will be responsible for activities listed under section B as stated:

Substantial Involvement Description for Cooperative Agreement

A. IHS Programmatic Involvement

(1) The IHS would like to support an annual meeting of AI/AN physicians and other health professionals. At least two IHS staff will be part of the planning committee for any meetings or training. They will work closely with the planning staff on all aspects of the meeting and training including development of the agenda, keynote

speakers, and special educational sessions, etc. The IHS staff is familiar with AI/AN physicians and other health professionals throughout Indian country. The IHS will also provide links to the applicant's Web site from the IHS Web site.

(2) IHS staff will also participate in any Federal meetings within the HHS and AI/AN youth to help facilitate information about the various agencies and to encourage youth to consider careers within HHS. This will help youth be more knowledgeable about Federal programs and resources available to AI/AN communities.

(3) IHS Clinical Support Center (CSC) will provide a process for offering continuing education (CE) credits for the annual meeting participants. The CSC is accredited as a sponsor of CE by various medical professional organizations.

(4) IHS Division of Health Professions Support will share information on recruitment strategies and current program information with applicant's staff and members. This sharing and dialogue will enhance communication and improve efforts to reach out to more AI/AN physicians and medical professionals.

B. Grantee Cooperative Agreement Award Activities

(1) Overall coordination and management of the annual meeting of AI/AN physicians and other health professionals including hosting the planning committee and setting up conference calls and meetings in preparation of the annual meeting.

(2) Manage registration and logistics for annual meeting.

(3) Distribute flyers and brochures to promote the annual meeting.

(4) Finalize the agenda and all materials.

(5) Provide meeting information on applicant's Web site with links to IHS Web site.

(6) Develop a mentoring program for AI/AN youth and young adults. This mentoring program will help support youth that are interested in pursuing a career in the medical professions.

(7) Provide opportunities for AI/AN youth to learn more about Federal programs and resources available especially for educational opportunities in the field of medicine. This effort will result in a more informed youth population that better understands the relationships between the Federal and Tribal governments.

III. Eligibility Information

1. Eligibility

This funding opportunity is limited to 501(c)(3) non-profit organizations. Proof of 501(c)(3) status must be provided. In addition, applicant organizations must meet the following criteria:

- Have as a core goal improving the health of AI/AN.
- Be committed to pursuing excellence in Native American health care by promoting education in the medical disciplines, honoring traditional healing principles and restoring the balance of mind, body and spirit.
- Offer educational programs, services and activities that motivate AI/AN students to remain in the academic pipeline and to pursue a career in the health professions and/or biomedical research.
- Foster forums where modern medicine combines with traditional healing to enhance health care delivery to AI/AN communities.
- Provide leadership in various care arenas affecting AI/AN such as diabetes mellitus, HIV/AIDS, domestic violence and methamphetamine use.

Note: Please refer to Section IV.2 (Application and Submission Information/ Subsection 2, Content and Form of Application Submission) for additional poof of applicant status documents required such as Tribal resolutions, proof of non-profit status, etc.

2. Cost Sharing or Matching

The IHS does not require matching funds or cost sharing for grants or cooperative agreements.

3. Other Requirements

If application budgets exceed the highest dollar amount outlined under the ''Estimated Funds Available'' section within this funding announcement, the application will be considered ineligible and will not be reviewed for further consideration. If deemed ineligible, IHS will not return the application. The applicant will be notified by email by the Division of Grants Management (DGM) of this decision.

Proof of Non-Profit Status

Organizations claiming non-profit status must submit proof. A copy of the 501(c)(3) Certificate must be received with your application submission by the Application Deadline Date listed under the Key Dates section on page one of this announcement.

Applicants submitting any of the above additional documentation after the initial application submission due date are required to ensure the information was received by the IHS by obtaining documentation confirming delivery (i.e. FedEx tracking, postal return receipt, etc.).

IV. Application and Submission Information

1. Obtaining Application Materials

The application package and detailed instructions for this announcement can be found at *http://www.Grants.gov* or *http://www.ihs.gov/NonMedicalPrograms/gogp/index.cfm?module=gogp_funding.* Questions regarding the electronic application process may be directed to Paul Gettys at (301) 443–2114.

2. Content and Form Application Submission

The applicant must include the project narrative as an attachment to the application package. Mandatory documents for all applicants include:

- Table of contents.
- Abstract (one page) summarizing the project.
- Application forms:
  - SF–424, Application for Federal Assistance.
  - SF–424A, Budget Information—Non-Construction Programs.
  - SF–424B, Assurances—Non-Construction Programs.
- Budget Justification and Narrative (must be single-spaced and not exceed five pages).
- Project Narrative (must not exceed ten pages).
  - Background information on the organization.
  - Proposed scope of work, objectives, and activities that provide a description of what will be accomplished, including a one-page Timeframe Chart.
- Disclosure of Lobbying Activities (SF–LLL).
- Certification Regarding Lobbying (GG-LobbyingForm).
- Copy of current Negotiated Indirect Cost rate (IDC) agreement (required) in order to receive IDC.
- Documentation of current OMB A–133 required Financial Audit (if applicable).

Acceptable forms of documentation include:

- Email confirmation from Federal Audit Clearinghouse (FAC) that audits were submitted; or
- Face sheets from audit reports. These can be found on the FAC Web site: *http://harvester.census.gov/sac/dissem/accessoptions.html?submit=Go+To+Database.*

Public Policy Requirements

All Federal-wide public policies apply to IHS grants with exception of the Discrimination policy.

Requirements for Project and Budget Narratives

A. *Project Narrative:* This narrative should be a separate Word document that is no longer than ten pages and must: Be single-spaced, be type written, have consecutively numbered pages, use black type not smaller than 12 characters per one inch, and be printed on one side only of standard size 8–½″ x 11″ paper.

Be sure to succinctly answer all questions listed under the evaluation criteria (refer to Section V.1, Evaluation criteria in this announcement) and place all responses and required information in the correct section (noted below), or they will not be considered or scored. These narratives will assist the Objective Review Committee (ORC) in becoming more familiar with the grantee's activities and accomplishments prior to this possible grant award. If the narrative exceeds the page limit, only the first ten pages will be reviewed. The 10-page limit for the narrative does not include the work plan, standard forms, table of contents, budget, budget justifications, narratives, and/or other appendix items.

There are three parts to the narrative: Part A—Program Information; Part B—Program Planning and Evaluation; and Part C—Program Report. See below for additional details about what must be included in the narrative.

Part A: Program Information (3 Page Limitation)

Section 1: Needs

Describe the applicant's organizational commitment and administrative infrastructure to support this agreement. Explain previous planning activities for any conferences, annual meetings and other forums or programs for AI/AN physicians and other health professionals. Describe the relationship with the IHS and the capacity to support this work.

Part B: Program Planning and Evaluation (3 Page Limitation)

Section 1: Program Plans

Describe any conferences, annual meetings and other forums or program plans for AI/AN physicians and health professionals in clear detail including the proposed timelines and activities. The purpose of the meeting would be to provide continuing education for physicians and other health professionals on topics to improve the health of AI/AN patients, families and communities. Describe the anticipated impact of the meeting as it relates to improving the health services for AI/AN. In addition, describe plans to develop a mentoring program and pipeline for recruiting more AI/AN youth into the medical professions. Describe the target audience and goals of such programs to increase the number of AI/ANs physicians and health care professionals providing health services to the Native American population.

Section 2: Program Evaluation

Describe fully and clearly the plans for evaluating the impact of an annual meeting of AI/AN physicians and other health care professionals with anticipated results. Describe the plans for mentoring programs and preparing more AI/AN youth to enter the medical professionals in the workforce.

Part C: Program Report (3 Page Limitation)

Section 1: Describe major Accomplishments over the last 24 months.

Describe major accomplishments by the applicant over the last 24 months as it relates to recruiting more AI/AN youth into the medical professions and continuing to provide continuing education opportunities (meetings, conferences) for AI/AN physicians and other medical professionals.

Please identify and describe significant program achievements associated with improving the health of the AI/AN population. Provide a comparison of the actual accomplishments to the goals established for the project.

B. *Budget Narrative:* This narrative must describe the budget requested and match the scope of work described in the project narrative. The page limitation should not exceed five pages.

3. Submission Dates and Times

Applications must be submitted electronically through Grants.gov by 12:00 a.m., midnight Eastern Standard Time (EST) on the Application Deadline Date listed in the Key Dates section on page one of this announcement. Any application received after the application deadline will not be accepted for processing, nor will it be given further consideration for funding. The applicant will be notified by the DGM via email of this decision.

If technical challenges arise and assistance is required with the electronic application process, contact Grants.gov Customer Support via email to *support@grants.gov* or at (800) 518–4726. Customer Support is available to address questions 24 hours a day, 7 days a week (except on Federal holidays). If problems persist, contact Paul Gettys, DGM (*Paul.Gettys@ihs.gov*) at (301) 443–2114. Please be sure to contact Mr. Gettys at least ten days prior to the application deadline. Please do not contact the DGM until you have received a Grants.gov tracking number. In the event you are not able to obtain a tracking number, call the DGM as soon as possible.

If the applicant needs to submit a paper application instead of submitting electronically via Grants.gov, prior approval must be requested and obtained (see Section IV.6 below for additional information). The waiver must be documented in writing (emails are acceptable), *before* submitting a paper application. A copy of the written approval must be submitted with the hardcopy that is mailed to the DGM. Once the waiver request has been approved, the applicant will receive a confirmation of approval and the mailing address to submit the application. Paper applications that are submitted without a waiver from the Acting Director of DGM will not be reviewed or considered further for funding. The applicant will be notified via email of this decision by the Grants Management Officer of DGM. Paper applications must be received by the DGM no later than 5:00 p.m., EST, on the Application Deadline Date listed in the Key Dates section on page one of this announcement. Late applications will not be accepted for processing or considered for funding.

4. Intergovernmental Review

Executive Order 12372 requiring intergovernmental review is not applicable to this program.

5. Funding Restrictions

- Pre-award costs are not allowable.
- The available funds are inclusive of direct and appropriate indirect costs.
- Only one grant/cooperative agreement will be awarded per applicant.
- IHS will not acknowledge receipt of applications.

6. Electronic Submission Requirements

All applications must be submitted electronically. Please use the *http://www.Grants.gov* Web site to submit an application electronically and select the ''Find Grant Opportunities'' link on the homepage. Download a copy of the application package, complete it offline, and then upload and submit the completed application via the *http://www.Grants.gov* Web site. Electronic copies of the application may not be

submitted as attachments to email messages addressed to IHS employees or offices.

If the applicant receives a waiver to submit paper application documents, they must follow the rules and timelines that are noted below. The applicant must seek assistance at least ten days prior to the Application Deadline Date listed in the Key Dates section on page one of this announcement.

Applicants that do not adhere to the timelines for System for Award Management (SAM) and/or *http://www.Grants.gov* registration or that fail to request timely assistance with technical issues will not be considered for a waiver to submit a paper application.

Please be aware of the following:

• Please search for the application package in *http://www.Grants.gov* by entering the CFDA number or the Funding Opportunity Number. Both numbers are located in the header of this announcement.

• If you experience technical challenges while submitting your application electronically, please contact Grants.gov Support directly at: *support@grants.gov* or (800) 518–4726. Customer Support is available to address questions 24 hours a day, 7 days a week (except on Federal holidays).

• Upon contacting Grants.gov, obtain a tracking number as proof of contact. The tracking number is helpful if there are technical issues that cannot be resolved and waiver from the agency must be obtained.

• If it is determined that a waiver is needed, the applicant must submit a request in writing (emails are acceptable) to *GrantsPolicy@ihs.gov* with a copy to *Tammy.Bagley@ihs.gov.* Please include a clear justification for the need to deviate from the standard electronic submission process.

• If the waiver is approved, the application should be sent directly to the DGM by the Application Deadline Date listed in the Key Dates section on page one of this announcement.

• Applicants are strongly encouraged not to wait until the deadline date to begin the application process through Grants.gov as the registration process for SAM and Grants.gov could take up to fifteen working days.

• Please use the optional attachment feature in Grants.gov to attach additional documentation that may be requested by the DGM.

• All applicants must comply with any page limitation requirements described in this Funding Announcement.

• After electronically submitting the application, the applicant will receive an automatic acknowledgment from Grants.gov that contains a Grants.gov tracking number. The DGM will download the application from Grants.gov and provide necessary copies to the appropriate agency officials. Neither the DGM nor the OCPS will notify the applicant that the application has been received.

• Email applications will not be accepted under this announcement.

Dun and Bradstreet (D&B) Data Universal Numbering System (DUNS)

All IHS applicants and grantee organizations are required to obtain a DUNS number and maintain an active registration in the SAM database. The DUNS number is a unique 9-digit identification number provided by D&B which uniquely identifies each entity. The DUNS number is site specific; therefore, each distinct performance site may be assigned a DUNS number. Obtaining a DUNS number is easy, and there is no charge. To obtain a DUNS number, please access it through *http://fedgov.dnb.com/webform,* or to expedite the process, call (866) 705–5711.

All HHS recipients are required by the Federal Funding Accountability and Transparency Act of 2006, as amended (''Transparency Act''), to report information on subawards. Accordingly, all IHS grantees must notify potential first-tier subrecipients that no entity may receive a first-tier subaward unless the entity has provided its DUNS number to the prime grantee organization. This requirement ensures the use of a universal identifier to enhance the quality of information available to the public pursuant to the ''Transparency Act.''

System for Award Management (SAM)

Organizations that were not registered with Central Contractor Registration (CCR) and have not registered with SAM will need to obtain a DUNS number first and then access the SAM online registration through the SAM home page at *https://www.sam.gov* (U.S. organizations will also need to provide an Employer Identification Number from the Internal Revenue Service that may take an additional 2–5 weeks to become active). Completing and submitting the registration takes approximately one hour to complete and SAM registration will take 3–5 business days to process. Registration with the SAM is free of charge. Applicants may register online at *https://www.sam.gov.*

Additional information on implementing the Transparency Act, including the specific requirements for DUNS and SAM, can be found on the IHS Grants Management, Grants Policy Web site: *http://www.ihs.gov/NonMedicalPrograms/gogp/index.cfm?module=gogp_policy_topics.*

V. Application Review Information

The instructions for preparing the application narrative also constitute the evaluation criteria for reviewing and scoring the application. Weights assigned to each section are noted in parentheses. The 10-page narrative should include only the first year of activities; information for multi-year projects should be included as an appendix. See ''Multi-year Project Requirements'' at the end of this section for more information. The narrative section should be written in a manner that is clear to outside reviewers unfamiliar with prior related activities of the applicant. It should be well organized, succinct, and contain all information necessary for reviewers to understand the project fully. Points will be assigned to each evaluation criteria adding up to a total of 100 points. A minimum score of 75 points is required for funding. Points are assigned as follows:

1. Criteria

A. Introduction and Need for Assistance (30 points)

This section should include an understanding of the need for assistance and collaboration for any meetings or trainings. Applicant should demonstrate demographic and health status of the AI/AN people; geographic and social factors including availability of health providers and access to care; funding streams and available resources and partners that can support this work; and organizational structure of the Indian health system. Applicant should also describe the current and projected demand for AI/AN providers.

B. Project Objective(s), Work Plan and Approach (40 points)

This section should demonstrate the soundness and effectiveness of the applicant's proposal. Describe how the planning will be managed and the role of all organizations.

C. Program Evaluation (10 points)

This section should show how the progress on this project will be assessed and how the success of the recruitment program will be evaluated. Specifically, list and describe the outcomes by which the program will be evaluated. Identify the individuals responsible for evaluation of the annual meeting and their qualifications.

D. Organizational Capabilities, Key Personnel and Qualifications (10 points)

This section outlines the broader capacity of the organization to complete the project outlined in the work plan. It includes the identification of personnel responsible for completing tasks and the chain of responsibility for successful completion of the program outlined in the work plan.

(1) Describe the structure of the organization.

(2) Describe the ability of the organization to manage the proposed projects.

(3) List key personnel who will work on the projects and annual meeting. In the appendix, include position descriptions and resumes of key staff and their duties and experience. Describe who will be writing progress reports.

E. Categorical Budget and Budget Justification (10 points)

This section should provide a clear estimate of the program costs and justification for expenses for the cooperative agreement period. The budget and budget justification should be consistent with the tasks identified in the work plan. If indirect costs are claimed, indicate and apply the current negotiated rate to the budget. Include a copy of the rate agreement in the appendix. Categorical budget (Form SF 424A) should be completed for each of the budget periods requested.

Multi-Year Project Requirements (if applicable)

Projects requiring second, third, fourth, and/or fifth year must include a brief project narrative and budget (one additional page per year) addressing the developmental plans for each additional year of the project.

Appendix Items

- Work plan, logic model and/or time line for proposed objectives.
- Consultant or contractor proposed scope of work and letter of commitment (if applicable).
- Current Indirect Cost Agreement.
- Additional documents to support narrative (i.e. data tables, key news articles, etc.).

2. Review and Selection

Each application will be prescreened by the DGM staff for eligibility and completeness as outlined in the funding announcement. Incomplete applications and applications that are non-responsive to the eligibility criteria will not be referred to the ORC. Applicants will be notified by DGM, via email, to outline minor missing components (i.e., signature on the SF–424, audit documentation, key contact form) needed for an otherwise complete application. All missing documents must be sent to DGM on or before the due date listed in the email of notification of missing documents required.

To obtain a minimum score for funding by the ORC, applicants must address all program requirements and provide all required documentation. If an applicant receives less than a minimum score, it will be considered to be ''Disapproved'' and will be informed via email by the IHS Program Office of their application's deficiencies. A summary statement outlining the strengths and weaknesses of the application will be provided to each disapproved applicant. The summary statement will be sent to the Authorized Organizational Representative (AOR) that is identified on the face page (SF–424) of the application within 30 days of the completion of the Objective Review.

VI. Award Administration Information

1. Award Notices

The Notice of Award (NoA) is a legally binding document signed by the Grants Management Officer and serves as the official notification of the grant award. The NoA will be initiated by the DGM in the grant system, GrantSolutions (*https://www.grantsolutions.gov*). Each entity that is approved for funding under this announcement will need to request or have a user account in GrantSolutions in order to retrieve their NoA. The NoA is the authorizing document for which funds are dispersed to the approved entities and reflects the amount of Federal funds awarded, the purpose of the grant, the terms and conditions of the award, the effective date of the award, and the budget/project period.

Disapproved Applicants

Applicants who received a score less than the recommended funding level for approval (75) and were deemed to be disapproved by the ORC will receive an Executive Summary Statement from the IHS program office within 30 days of the conclusion of the ORC outlining the weaknesses and strengths of the submitted application. The IHS program office will also provide additional contact information as needed to address questions and concerns as well as provide technical assistance if desired.

Approved But Unfunded Applicants

Approved but unfunded applicants that met the minimum scoring range and were deemed by the ORC to be ''Approved'', but were not funded due to lack of funding, will have their applications held by DGM for a period of one year. If additional funding becomes available during the course of FY 2013, the approved applications may be re-considered by the awarding program office for possible funding. The applicant will also receive an Executive Summary Statement from the IHS program office within 30 days of the conclusion of the ORC.

Note: Any correspondence other than the official NoA issued by an IHS Grants Management Official announcing to the Project Director that an award has been made to their organization is not an authorization to implement their program on behalf of IHS.

2. Administrative Requirements

Cooperative agreements are administered in accordance with the following regulations, policies, and Office of Management and Budget (OMB) cost principles:

A. The criteria as outlined in this Program Announcement.

B. Administrative Regulations for Grants:

- 45 CFR Part 92, Uniform Administrative Requirements for Grants and Cooperative Agreements to State, Local and Tribal Governments.
- 45 CFR Part 74, Uniform Administrative Requirements for Awards and Subawards to Institutions of Higher Education, Hospitals, and other Non-profit Organizations.

C. Grants Policy:

- HHS Grants Policy Statement, Revised 01/07.

D. Cost Principles:

- 2 CFR Part 225—Cost Principles for State, Local, and Indian Tribal Governments (OMB Circular A–87).
- 2 CFR Part 230—Cost Principles for Non-Profit Organizations (OMB Circular A–122).

E. Audit Requirements:

- OMB Circular A–133, Audits of States, Local Governments, and Non-profit Organizations.

3. Indirect Costs

This section applies to all grant recipients that request reimbursement of indirect costs (IDC) in their grant application. In accordance with HHS Grants Policy Statement, Part II–27, IHS requires applicants to obtain a current IDC rate agreement prior to award. The rate agreement must be prepared in accordance with the applicable cost principles and guidance as provided by

the cognizant agency or office. A current rate covers the applicable grant activities under the current award's budget period. If the current rate is not on file with the DGM at the time of award, the IDC portion of the budget will be restricted. The restrictions remain in place until the current rate is provided to the DGM.

Generally, IDC rates for IHS grantees are negotiated with the Division of Cost Allocation (DCA) *https://rates.psc.gov/* and the Department of Interior (Interior Business Center) *http://www.doi.gov/ibc/services/Indirect_Cost_Services/index.cfm.* For questions regarding the indirect cost policy, please call (301) 443–5204 to request assistance.

4. Reporting Requirements

The grantee must submit required reports consistent with the applicable deadlines. Failure to submit required reports within the time allowed may result in suspension or termination of an active grant, withholding of additional awards for the project, or other enforcement actions such as withholding of payments or converting to the reimbursement method of payment. Continued failure to submit required reports may result in one or both of the following: (1) The imposition of special award provisions; and (2) the non-funding or non-award of other eligible projects or activities. This requirement applies whether the delinquency is attributable to the failure of the grantee organization or the individual responsible for preparation of the reports. Reports must be submitted electronically via GrantSolutions. Personnel responsible for submitting reports will be required to obtain a login and password for GrantSolutions. Please see the Agency Contacts list in section VII for the systems contact information.

The reporting requirements for this program are noted below.

A. Progress Reports

Program progress reports are required semiannually, within 30 days after the budget period ends. These reports must include a brief comparison of actual accomplishments to the goals established for the period, or, if applicable, provide sound justification for the lack of progress, and other pertinent information as required. A final report must be submitted within 90 days of expiration of the budget/project period.

B. Financial Reports

Federal Financial Report FFR (SF–425), Cash Transaction Reports are due 30 days after the close of every calendar quarter to the Division of Payment Management, HHS at: *http://www.dpm.psc.gov.* It is recommended that the applicant also send a copy of the FFR (SF–425) report to the Grants Management Specialist. Failure to submit timely reports may cause a disruption in timely payments to the applicant's organization.

Grantees are responsible and accountable for accurate information being reported on all required reports: the Progress Reports and FFR.

C. Federal Subaward Reporting System (FSRS)

This award may be subject to the Transparency Act subaward and executive compensation reporting requirements of 2 CFR Part 170.

The Transparency Act requires the OMB to establish a single searchable database, accessible to the public, with information on financial assistance awards made by Federal agencies. The Transparency Act also includes a requirement for recipients of Federal grants to report information about first-tier subawards and executive compensation under Federal assistance awards.

IHS has implemented a Term of Award into all IHS Standard Terms and Conditions, NoAs and funding announcements regarding the FSRS reporting requirement. This IHS Term of Award is applicable to all IHS grant and cooperative agreements issued on or after October 1, 2010, with a $25,000 subaward obligation dollar threshold met for any specific reporting period. Additionally, all new (discretionary) IHS awards (where the project period is made up of more than one budget period) and where: 1) the project period start date was October 1, 2010 or after and 2) the primary awardee will have a $25,000 subaward obligation dollar threshold during any specific reporting period will be required to address the FSRS reporting. For the full IHS award term implementing this requirement and additional award applicability information, visit the Grants Management Grants Policy Web site at: *http://www.ihs.gov/NonMedicalPrograms/gogp/index.cfm?module=gogp_policy_topics.*

Telecommunication for the hearing impaired is available at: TTY (301) 443–6394.

VII. Agency Contacts

1. Questions on the programmatic issues may be directed to: Susan Karol, MD, Chief Medical Officer, 801 Thompson Avenue, TMP Suite 400, Rockville, MD 20852, Phone: 301–443–1083, Fax: 301–443–4794, Email: *Susan.Karol@ihs.gov.*

2. Questions on grants management and fiscal matters may be directed to: Ms. Cherron Smith, Grants Management Specialist, 801 Thompson Avenue, TMP Suite 360, Rockville, MD 20852, Phone: 301–443–5204, Fax: 301–443–9602, Email: *Cherron.Smith@ihs.gtov.*

3. Questions on systems matters may be directed to: Paul Gettys, Grant Systems Coordinator, 801 Thompson Avenue, TMP Suite 360, Rockville, MD 20852, Phone: 301–443–2114; or the DGM main line 301–443–5204, Fax: 301–443–9602, email: *Paul.Gettys@ihs.gov.*

VIII. Other Information

The Public Health Service strongly encourages all cooperative agreement and contract recipients to provide a smoke-free workplace and promote the non-use of all tobacco products. In addition, Pub. L. 103–227, the Pro-Children Act of 1994, prohibits smoking in certain facilities (or in some cases, any portion of the facility) in which regular or routine education, library, day care, health care, or early childhood development services are provided to children. This is consistent with the HHS mission to protect and advance the physical and mental health of the American people.

Dated: March 13, 2013.

Yvette Roubideaux,

Director, Indian Health Service.

[FR Doc. 2013–07117 Filed 3–27–13; 8:45 am]

BILLING CODE 4165–16–P

DEPARTMENT OF HEALTH AND HUMAN SERVICES

National Institutes of Health

National Heart, Lung, and Blood Institute; Notice of Closed Meetings

Pursuant to section 10(d) of the Federal Advisory Committee Act, as amended (5 U.S.C. App.), notice is hereby given of the following meetings.

The meetings will be closed to the public in accordance with the provisions set forth in sections 552b(c)(4) and 552b(c)(6), Title 5 U.S.C., as amended. The grant applications and the discussions could disclose confidential trade secrets or commercial property such as patentable material, and personal information concerning individuals associated with the grant applications, the disclosure of which would constitute a clearly unwarranted invasion of personal privacy.

Name of Committee: National Heart, Lung, and Blood Institute Special Emphasis Panel, Research Dissemination and Implementation.

Date: April 22, 2013.

Time: 1:00 p.m. to 3:00 p.m.

Agenda: To review and evaluate grant applications.

Place: Crystal City Marriott, 1999 Jefferson Davis Highway, Arlington, VA 22202.

Contact Person: Keith A. Mintzer, Ph.D., Scientific Review Officer, Review Branch/DERA, National Heart, Lung, and Blood Institute, 6701 Rockledge Drive, Room 7186, Bethesda, MD 20892–7924, 301–594–7947, *mintzerk@nhlbi.nih.gov.*

Name of Committee: National Heart, Lung, and Blood Institute Special Emphasis Panel, Ancillary Studies.

Date: April 23, 2013.

Time: 8:00 a.m. to 4:00 p.m.

Agenda: To review and evaluate grant applications.

Place: Hyatt Regency Bethesda, One Bethesda Metro Center, 7400 Wisconsin Avenue, Bethesda, MD 20814.

Contact Person: Kristen Page, Ph.D., Scientific Review Officer, Office of Scientific Review/DERA, National Heart, Lung, and Blood Institute, 6701 Rockledge Drive, Room 7185, Bethesda, MD 20892, 301–435–0725, kristen.page@nih.gov.

(Catalogue of Federal Domestic Assistance Program Nos. 93.233, National Center for Sleep Disorders Research; 93.837, Heart and Vascular Diseases Research; 93.838, Lung Diseases Research; 93.839, Blood Diseases and Resources Research, National Institutes of Health, HHS)

Dated: March 22, 2013.

Michelle Trout,

Program Analyst, Office of Federal Advisory Committee Policy.

[FR Doc. 2013–07119 Filed 3–27–13; 8:45 am]

BILLING CODE 4140–01–P

DEPARTMENT OF HEALTH AND HUMAN SERVICES

National Institutes of Health

National Institute of Allergy and Infectious Diseases; Notice of Closed Meeting

Pursuant to section 10(d) of the Federal Advisory Committee Act, as amended (5 U.S.C. App.), notice is hereby given of the following meeting.

The meeting will be closed to the public in accordance with the provisions set forth in sections 552b(c)(4) and 552b(c)(6), Title 5 U.S.C., as amended. The grant applications and the discussions could disclose confidential trade secrets or commercial property such as patentable material, and personal information concerning individuals associated with the grant applications, the disclosure of which would constitute a clearly unwarranted invasion of personal privacy.

Name of Committee: National Institute of Allergy and Infectious Diseases Special Emphasis Panel, NIAID Peer Review Meeting.

Date: April 4, 2013.

Time: 1:00 p.m. to 5:00 p.m.

Agenda: To review and evaluate contract proposals.

Place: National Institutes of Health, Rockledge 6700, 6700B Rockledge Drive, Bethesda, MD 20817, (Telephone Conference Call).

Contact Person: Yong Gao, Ph.D., Scientific Review Officer, Scientific Review Program, National Institutes of Health/NIAID, 6700B Rockledge Drive, Room 3127, Bethesda, MD 20892, 301–443–8115, *gaol2@niaid.nih.gov.*

This notice is being published less than 15 days prior to the meeting due to the timing limitations imposed by the review and funding cycle.

(Catalogue of Federal Domestic Assistance Program Nos. 93.855, Allergy, Immunology, and Transplantation Research; 93.856, Microbiology and Infectious Diseases Research, National Institutes of Health, HHS)

Dated: March 21, 2013.

David Clary,

Program Analyst, Office of Federal Advisory Committee Policy.

[FR Doc. 2013–07120 Filed 3–27–13; 8:45 am]

BILLING CODE 4140–01–P

DEPARTMENT OF HEALTH AND HUMAN SERVICES

National Institutes of Health

Eunice Kennedy Shriver National Institute of Child Health & Human Development; Notice of Closed Meeting

Pursuant to section 10(d) of the Federal Advisory Committee Act, as amended (5 U.S.C. App.), notice is hereby given of the following meeting.

The meeting will be closed to the public in accordance with the provisions set forth in sections 552b(c)(4) and 552b(c)(6), Title 5 U.S.C., as amended. The grant applications and the discussions could disclose confidential trade secrets or commercial property such as patentable material, and personal information concerning individuals associated with the grant applications, the disclosure of which would constitute a clearly unwarranted invasion of personal privacy.

Name of Committee: National Institute of Child Health and Human Development Special Emphasis Panel, Alexander Disease; Mechanisms, Modifiers and Therapeutics.

Date: April 23, 2013.

Time: 1:00 p.m. to 6:00 p.m.

Agenda: To review and evaluate grant applications.

Place: National Institutes of Health, 6100 Executive Boulevard, Rockville, MD 20852 (Telephone Conference Call).

Contact Person: Sathasiva B. Kandasamy, Ph.D., Scientific Review Officer, Division of Scientific Review, National Institute of Child Health And Human Development, 6100 Executive Boulevard, Rockville, MD 20892–9304, (301) 435–6680, *skandasa@mail.nih.gov.*

(Catalogue of Federal Domestic Assistance Program Nos. 93.864, Population Research; 93.865, Research for Mothers and Children; 93.929, Center for Medical Rehabilitation Research; 93.209, Contraception and Infertility Loan Repayment Program, National Institutes of Health, HHS)

Dated: March 22, 2013.

Michelle Trout,

Program Analyst, Office of Federal Advisory Committee Policy.

[FR Doc. 2013–07125 Filed 3–27–13; 8:45 am]

BILLING CODE 4140–01–P

DEPARTMENT OF HEALTH AND HUMAN SERVICES

National Institutes of Health

National Institute of Neurological Disorders and Stroke; Notice of Closed Meeting

Pursuant to section 10(d) of the Federal Advisory Committee Act, as amended (5 U.S.C. App.), notice is hereby given of the following meeting.

The meeting will be closed to the public in accordance with the provisions set forth in sections 552b(c)(4) and 552b(c)(6), Title 5 U.S.C., as amended. The grant applications and the discussions could disclose confidential trade secrets or commercial property such as patentable materials, and personal information concerning individuals associated with the grant applications, the disclosure of which would constitute a clearly unwarranted invasion of personal privacy.

Name of Committee: National Institute of Neurological Disorders and Stroke Special Emphasis Panel; Huntington's Disease SEP.

Date: April 15, 2013.

Time: 9:00 a.m. to 1:00 p.m.

Agenda: To review and evaluate grant applications.

Place: National Institutes of Health, Neuroscience Center, 6001 Executive Boulevard, Rockville, MD 20852, (Telephone Conference Call).

Contact Person: Shanta Rajaram, Ph.D., Scientific Review Officer, Scientific Review Branch, Division of Extramural Research, NINDS, NIH, NSC, 6001 Executive Blvd., Suite 3208, MSC 9529, Bethesda, MD 20892–9529, 301–435–6033, *rajarams@mail.nih.gov.*

(Catalogue of Federal Domestic Assistance Program Nos. 93.853, Clinical Research Related to Neurological Disorders; 93.854, Biological Basis Research in the Neurosciences, National Institutes of Health, HHS)

Dated: March 21, 2013.

Carolyn Baum,

Program Analyst, Office of Federal Advisory Committee Policy.

[FR Doc. 2013–07128 Filed 3–27–13; 8:45 am]

BILLING CODE 4140–01–P

DEPARTMENT OF HEALTH AND HUMAN SERVICES

National Institutes of Health

National Institute of Environmental Health Sciences; Notice of Meeting

Pursuant to section 10(d) of the Federal Advisory Committee Act, as amended (5 U.S.C. App.), notice is hereby given of a meeting of the Board of Scientific Counselors, NIEHS.

The meeting will be open to the public as indicated below, with attendance limited to space available. Individuals who plan to attend and need special assistance, such as sign language interpretation or other reasonable accommodations, should notify the Contact Person listed below in advance of the meeting.

The meeting will be closed to the public as indicated below in accordance with the provisions set forth in section 552b(c)(6), Title 5 U.S.C., as amended for the review, discussion, and evaluation of individual intramural programs and projects conducted by the National Institute of Environmental Health Sciences, including consideration of personnel qualifications and performance, and the competence of individual investigators, the disclosure of which would constitute a clearly unwarranted invasion of personal privacy.

Name of Committee: Board of Scientific Counselors, NIEHS.

Date: April 14–16, 2013.

Closed: April 14, 2013, 7:00 p.m. to 10:00 p.m.

Agenda: To review and evaluate programmatic and personnel issues.

Place: Doubletree Guest Suites, 2515 Meridian Suites, Research Triangle Park, NC 27713.

Open: April 15, 2013, 8:30 a.m. to 11:50 a.m.

Agenda: An overview of the Laboratory of Toxicology and Pharmacology, Intracellular Regulation, Neuropharmacology and Human Metabolism Groups.

Place: Nat. Inst. of Environmental Health Sciences, Building 101, Rodbell Auditorium, 111 T. W. Alexander Drive, Research Triangle Park, NC 27709.

Closed: April 15, 2013, 11:50 a.m. to 12:35 a.m.

Agenda: To review and evaluate programmatic and personnel issues.

Place: Nat. Inst. of Environmental Health Sciences, Building 101, Rodbell Auditorium, 111 T. W. Alexander Drive, Research Triangle Park, NC 27709.

Open: April 15, 2013, 1:30 p.m. to 3:00 p.m.

Agenda: Poster Sessions.

Place: Nat. Inst. of Environmental Health Sciences, Building 101, Rodbell Auditorium, 111 T. W. Alexander Drive, Research Triangle Park, NC 27709.

Closed: April 15, 2013, 3:15 p.m. to 3:45 p.m.

Agenda: To review and evaluate programmatic and personnel issues.

Place: Nat. Inst. of Environmental Health Sciences, Building 101, Rodbell Auditorium, 111 T. W. Alexander Drive, Research Triangle Park, NC 27709.

Open: April 15, 2013, 3:45 p.m. to 5:25 p.m.

Agenda: An overview of the Environmental Stress & Cancer Group and Free Radical Metabolism Group.

Place: Nat. Inst. of Environmental Health Sciences, Building 101, Rodbell Auditorium, 111 T. W. Alexander Drive, Research Triangle Park, NC 27709.

Closed: April 15, 2013, 5:30 p.m. to 6:00 p.m.

Agenda: To review and evaluate programmatic and personnel issues.

Place: Nat. Inst. of Environmental Health Sciences, Building 101, Rodbell Auditorium, 111 T. W. Alexander Drive, Research Triangle Park, NC 27709.

Closed: April 15, 2013, 8:00 p.m. to 10:00 p.m.

Agenda: To review and evaluate programmatic and personnel issues.

Place: Nat. Inst. of Environmental Health Sciences, Building 101, Rodbell Auditorium, 111 T. W. Alexander Drive, Research Triangle Park, NC 27709.

Open: April 16, 2013, 8:30 a.m. to 10:10 a.m.

Agenda: An overview of the Comparative Genomics Group and Metabolism, Genes, and Environment Group.

Place: Nat. Inst. of Environmental Health Sciences, Building 101, Rodbell Auditorium, 111 T. W. Alexander Drive, Research Triangle Park, NC 27709.

Closed: April 16, 2013, 10:25 a.m. to 12:00 p.m.

Agenda: To review and evaluate programmatic and personnel issues.

Place: Nat. Inst. of Environmental Health Sciences, Building 101, Rodbell Auditorium, 111 T. W. Alexander Drive, Research Triangle Park, NC 27709.

Closed: April 16, 2013, 1:00 p.m. to 3:30 p.m.

Agenda: To review and evaluate programmatic and personnel issues.

Place: Nat. Inst. of Environmental Health Sciences, Building 101, Rodbell Auditorium, 111 T. W. Alexander Drive, Research Triangle Park, NC 27709.

Contact Person: Darryl C. Zeldin, M.D., Scientific Director & Principal Investigator, Division of Intramural Research, National Institute of Environmental Health Sciences, NIH, 111 TW Alexander Drive, Maildrop A2–09, Research Triangle Park, NC 27709, 919–541–1169, *zeldin@niehs.nih.gov.*

Any interested person may file written comments with the committee by forwarding the statement to the Contact Person listed on this notice. The statement should include the name, address, telephone number and when applicable, the business or professional affiliation of the interested person.

(Catalogue of Federal Domestic Assistance Program Nos. 93.115, Biometry and Risk Estimation—Health Risks from Environmental Exposures; 93.142, NIEHS Hazardous Waste Worker Health and Safety Training; 93.143, NIEHS Superfund Hazardous Substances—Basic Research and Education; 93.894, Resources and Manpower Development in the Environmental Health Sciences; 93.113, Biological Response to Environmental Health Hazards; 93.114, Applied Toxicological Research and Testing, National Institutes of Health, HHS)

Dated: March 22, 2013.

Carolyn Baum,

Program Analyst, Office of Federal Advisory Committee Policy.

[FR Doc. 2013–07118 Filed 3–27–13; 8:45 am]

BILLING CODE 4140–01–P

DEPARTMENT OF HEALTH AND HUMAN SERVICES

National Institutes of Health

Eunice Kennedy Shriver National Institute of Child Health & Human Development; Notice of Closed Meeting

Pursuant to section 10(d) of the Federal Advisory Committee Act, as amended (5 U.S.C. App.), notice is hereby given of the following meeting.

The meeting will be closed to the public in accordance with the provisions set forth in sections 552b(c)(4) and 552b(c)(6), Title 5 U.S.C., as amended. The grant applications and the discussions could disclose confidential trade secrets or commercial property such as patentable material, and personal information concerning individuals associated with the grant applications, the disclosure of which would constitute a clearly unwarranted invasion of personal privacy.

Name of Committee: National Institute of Child Health and Human Development Special Emphasis Panel, Social-Cognitive Skill Intervention for Disadvantaged Youth.

Date: April 22, 2013.

Time: 1:30 p.m. to 4:00 p.m.

Agenda: To review and evaluate grant applications.

Place: National Institutes of Health, 6100 Executive Boulevard, Rockville, MD 20852, (Telephone Conference Call).

Contact Person: Carla T. Walls, Ph.D., Scientific Review Officer, Division of Scientific Review, Eunice Kennedy Shriver National Institute of Child Health and Human Development, NIH, 6100 Executive Boulevard, Room 5b01, Bethesda, MD 20892–7510, 301–435–6898, *wallsc@mail.nih.gov.*

(Catalogue of Federal Domestic Assistance Program Nos. 93.864, Population Research; 93.865, Research for Mothers and Children; 93.929, Center for Medical Rehabilitation Research; 93.209, Contraception and Infertility Loan Repayment Program, National Institutes of Health, HHS)

Dated: March 22, 2013.

Michelle Trout,

Program Analyst, Office of Federal Advisory Committee Policy.

[FR Doc. 2013–07124 Filed 3–27–13; 8:45 am]

BILLING CODE 4140–01–P

DEPARTMENT OF HEALTH AND HUMAN SERVICES

National Institutes of Health

Eunice Kennedy Shriver National Institute of Child Health & Human Development; Notice of Meeting

Pursuant to section 10(d) of the Federal Advisory Committee Act, as amended (5 U.S.C. App.), notice is hereby given of the following meeting.

The meeting will be open to the public, with attendance limited to space available. Individuals who plan to attend and need special assistance, such as sign language interpretation or other reasonable accommodations, should notify the contact person listed below in advance of the meeting.

Name of Committee: National Institute of Child Health and Human Development Special Emphasis Panel, Diet, Obesity, and Weight Change in Pregnancy: Biobehavioral Influences and Intervention Approaches.

Date: April 25, 2013.

Time: 1:00 p.m. to 2:00 p.m.

Agenda: To provide concept review of proposed concept review.

Place: National Institutes of Health, 6100 Executive Boulevard, Rockville, MD 20852.

Contact Person: Sathasiva B. Kandasamy, Ph.D., Scientific Review Officer, Division of Scientific Review, National Institute of Child Health and Human Development, 6100 Executive Boulevard, Rockville, MD 20892–9304, (301) 435–6680, *skandasa@mail.nih.gov.*

(Catalogue of Federal Domestic Assistance Program Nos. 93.864, Population Research; 93.865, Research for Mothers and Children; 93.929, Center for Medical Rehabilitation Research; 93.209, Contraception and Infertility Loan Repayment Program, National Institutes of Health, HHS).

Dated: March 22, 2013.

Michelle Trout,

Program Analyst, Office of Federal Advisory Committee Policy.

[FR Doc. 2013–07127 Filed 3–27–13; 8:45 am]

BILLING CODE 4140–01–P

DEPARTMENT OF HEALTH AND HUMAN SERVICES

National Institutes of Health

Eunice Kennedy Shriver National Institute of Child Health & Human Development; Notice of Closed Meeting

Pursuant to section 10(d) of the Federal Advisory Committee Act, as amended (5 U.S.C. App.), notice is hereby given of the following meeting.

The meeting will be closed to the public in accordance with the provisions set forth in sections 552b(c)(4) and 552b(c)(6), Title 5 U.S.C., as amended. The grant applications and the discussions could disclose confidential trade secrets or commercial property such as patentable material, and personal information concerning individuals associated with the grant applications, the disclosure of which would constitute a clearly unwarranted invasion of personal privacy.

Name of Committee: National Institute of Child Health and Human Development Special Emphasis Panel; ZHD1 DSR–H MR 1.

Date: April 23, 2013.

Time: 2:00 p.m. to 5:00 p.m.

Agenda: To review and evaluate grant applications.

Place: National Institutes of Health, 6100 Executive Boulevard, Rockville, MD 20852, (Telephone Conference Call).

Contact Person: Marita R. Hopmann, Ph.D., Scientific Review Officer, Division Of Scientific Review, Eunice Kennedy Shriver National Institute of Child Health and Human Development, NIH, 6100 Executive Blvd., Room 5b01, Bethesda, MD 20892, 301–435–6911, *hopmannm@mail.nih.gov.*

(Catalogue of Federal Domestic Assistance Program Nos. 93.864, Population Research; 93.865, Research for Mothers and Children; 93.929, Center for Medical Rehabilitation Research; 93.209, Contraception and Infertility Loan Repayment Program, National Institutes of Health, HHS)

Dated: March 22, 2013.

Michelle Trout,

Program Analyst, Office of Federal Advisory Committee Policy.

[FR Doc. 2013–07126 Filed 3–27–13; 8:45 am]

BILLING CODE 4140–01–P

DEPARTMENT OF HEALTH AND HUMAN SERVICES

National Institutes of Health

Eunice Kennedy Shriver National Institute of Child Health & Human Development; Notice of Closed Meeting

Pursuant to section 10(d) of the Federal Advisory Committee Act, as amended (5 U.S.C. App.), notice is hereby given of the following meeting.

The meeting will be closed to the public in accordance with the provisions set forth in sections 552b(c)(4) and 552b(c)(6), Title 5 U.S.C., as amended. The grant applications and the discussions could disclose confidential trade secrets or commercial property such as patentable material, and personal information concerning individuals associated with the grant applications, the disclosure of which would constitute a clearly unwarranted invasion of personal privacy.

Name of Committee: National Institute of Child Health and Human Development Special Emphasis Panel, ZHD1 DRG (RL).

Date: April 12, 2013.

Time: 1:00 p.m. to 2:00 p.m.

Agenda: To review and evaluate grant applications.

Place: National Institute of Health, 6100 Executive Boulevard, Rockville, MD 20852, (Telephone Conference Call).

Contact Person: Sherry L. Dupere, Ph.D., Director, Division Of Scientific Review, Division Of Scientific Review, Eunice Kennedy Shriver National Institute of Child Health And Human Development, NIH, 6100 Executive Blvd., Room 5b01, Bethesda, MD 20892, 301–451–3415, *duperes@mail.nih.gov.*

(Catalogue of Federal Domestic Assistance Program Nos. 93.864, Population Research; 93.865, Research for Mothers and Children; 93.929, Center for Medical Rehabilitation Research; 93.209, Contraception and Infertility Loan Repayment Program, National Institutes of Health, HHS)

Dated: March 22, 2013.

Michelle Trout,

Program Analyst, Office of Federal Advisory Committee Policy.

[FR Doc. 2013–07121 Filed 3–27–13; 8:45 am]

BILLING CODE 4140–01–P

DEPARTMENT OF HEALTH AND HUMAN SERVICES

National Institutes of Health

Eunice Kennedy Shriver National Institute of Child Health & Human Development; Notice of Closed Meeting

Pursuant to section 10(d) of the Federal Advisory Committee Act, as amended (5 U.S.C. App.), notice is hereby given of the following meeting.

The meeting will be closed to the public in accordance with the provisions set forth in sections 552b(c)(4) and 552b(c)(6), Title 5 U.S.C., as amended. The contract proposals and the discussions could disclose confidential trade secrets or commercial property such as patentable material, and personal information concerning individuals associated with the contract

proposals, the disclosure of which would constitute a clearly unwarranted invasion of personal privacy.

Name of Committee: National Institute of Child Health and Human Development Special Emphasis Panel, Loan Repayment Program.

Date: April 22, 2013.

Time: 1:00 p.m. to 4:00 p.m.

Agenda: To review and evaluate contract proposals.

Place: National Institutes of Health, 6100 Executive Boulevard, Rockville, MD 20852 (Telephone Conference Call).

Contact Person: Sathasiva B. Kandasamy, Ph.D., Scientific Review Officer, Division Of Scientific Review, National Institute Of Child Health And Human Development, 6100 Executive Boulevard, Rockville, Md 20892–9304, (301) 435–6680, *skandasa@mail.nih.gov.*

(Catalogue of Federal Domestic Assistance Program Nos. 93.864, Population Research; 93.865, Research for Mothers and Children; 93.929, Center for Medical Rehabilitation Research; 93.209, Contraception and Infertility Loan Repayment Program, National Institutes of Health, HHS)

Dated: March 22, 2013.

Michelle Trout,

Program Analyst, Office of Federal Advisory Committee Policy.

[FR Doc. 2013–07123 Filed 3–27–13; 8:45 am]

BILLING CODE 4140–01–P

DEPARTMENT OF HEALTH AND HUMAN SERVICES

National Institutes of Health

Prospective Grant of Start-Up Exclusive License: Photosensitizing Antibody-Fluorophore Conjugates for Photoimmunotherapy

AGENCY: National Institutes of Health, Public Health Service, HHS.

ACTION: Notice.

SUMMARY: This is notice, in accordance with 35 U.S.C. 209(c)(1) and 37 CFR 404.7(a)(1)(i), that the National Institutes of Health (NIH), Department of Health and Human Services (HHS), is contemplating the grant of a worldwide exclusive patent license, to practice the inventions embodied in PCT patent application PCT/US2012/044421, filed June 27, 2012 (HHS Reference# E–205–2010/2–PCT–01), which is a continuation-in-part of U.S. Application No. 13/180,111 (E–205–2010/1–US–01) which claims priority to U.S. provisional application No. 61/363,079 (E–205–2010/0–US–01), and entitled ''Photosensitizing Antibody-Fluorophore Conjugates,'' to Aspyrian Therapeutics, Inc., a company incorporated under the laws of the State of Delaware, having its headquarters in San Diego, California.

The United States of America is the assignee of the rights of the above invention.

The field of use may be limited to ''use of photosensitizing antibody-fluorophore conjugate by itself for Photoimmunotherapy (PIT), or in combination with cancer therapeutic agents, to treat cancer or pre-cancerous hyperplasia'', and may be further limited to certain types of cancer and/or specific platforms.

The license will include the priority case US 13/180,111, which is currently licensed to Aspyrian under an exclusive evaluation option license. The exclusive commercialization license proposed in this notice will supersede and replace the exclusive evaluation option license.

DATES: Only written comments and/or applications for a license received by the NIH Office of Technology Transfer on or before April 12, 2013 will be considered.

ADDRESSES: Requests for a copy of the patent application, inquiries, comments and other materials relating to the contemplated license should be directed to: Uri Reichman, Ph.D., M.B.A, Office of Technology Transfer, National Institutes of Health, 6011 Executive Boulevard, Suite 325, Rockville, MD 20852–3804; Telephone: (301) 435–4616; Facsimile: (301) 402–0220; Email: *Reichmau@mail.nih.gov.* A signed confidentiality nondisclosure agreement will be required to receive copies of any patent applications that have not been published or issued by the United States Patent and Trademark Office or the World Intellectual Property Organization.

SUPPLEMENTARY INFORMATION: The invention is in the field of Photoimmunotherapy (PIT). More specifically, the invention relates to antibody-fluorophore conjugates where the antibody is specific for cancer cells and the fluorophore is IR700 dye. Binding of such conjugates to targeted cancer cells followed by irradiation with near infrared light (NIR) was shown to kill cancer cells in a highly specific manner. Furthermore, the invention discloses that the therapeutic effect of the PIT conjugate is significantly enhanced by the administration of one or more anti-cancer agents following the irradiation step. This is achieved by the markedly rapid accumulation of the therapeutic agent in the PIT-treated tissue. Also provided in the invention are wearable devices that incorporate NIR light emitting diodes (LEDs) and can be used to activate the PIT conjugates.

The prospective exclusive license will comply with the terms and conditions of 35 U.S.C. 209 and 37 CFR 404.7. The prospective exclusive license may be granted unless, within fifteen (15) days from the date of this published notice, NIH receives written evidence and argument that establishes that the grant of the license would not be consistent with the requirements of 35 U.S.C. 209 and 37 CFR 404.7.

Properly filed competing applications for a license filed in response to this notice will be treated as objections to the contemplated license. Comments and objections submitted in response to this notice will not be made available for public inspection, and, to the extent permitted by law, will not be released under the Freedom of Information Act, 5 U.S.C. 552.

Dated: March 22, 2013.

Richard U. Rodriguez,

Director, Division of Technology Development and Transfer, Office of Technology Transfer, National Institutes of Health.

[FR Doc. 2013–07166 Filed 3–27–13; 8:45 am]

BILLING CODE 4140–01–P

DEPARTMENT OF HOMELAND SECURITY

U.S. Customs and Border Protection

Accreditation and Approval of SGS North America, Inc., as a Commercial Gauger and Laboratory

AGENCY: U.S. Customs and Border Protection, Department of Homeland Security.

ACTION: Notice of accreditation and approval of SGS North America, Inc., as a commercial gauger and laboratory.

SUMMARY: Notice is hereby given, pursuant to CBP regulations, that SGS North America, Inc., has been approved to gauge and accredited to test petroleum and petroleum products, organic chemicals and vegetable oils for customs purposes for the next three years as of November 1, 2012.

DATES: *Effective Dates:* The accreditation and approval of SGS North America, Inc., as commercial gauger and laboratory became effective on November 1, 2012. The next triennial inspection date will be scheduled for November 2015.

FOR FURTHER INFORMATION CONTACT: Approved Gauger and Accredited Laboratories Manager, Laboratories and Scientific Services, U.S. Customs and Border Protection, 1300 Pennsylvania Avenue NW., Suite 1500N, Washington, DC 20229, tel. 202–344–1060.

SUPPLEMENTARY INFORMATION: Notice is hereby given pursuant to 19 CFR 151.12 and 19 CFR 151.13, that SGS North America, Inc., 1084 West Lathrop Ave., Savannah, GA 31415, has been approved to gauge and accredited to test petroleum and petroleum products, organic chemicals and vegetable oils for customs purposes, in accordance with the provisions of 19 CFR 151.12 and 19 CFR 151.13. Anyone wishing to employ this entity to conduct laboratory analyses and gauger services should request and receive written assurances from the entity that it is accredited or approved by the U.S. Customs and Border Protection to conduct the specific test or gauger service requested. Alternatively, inquiries regarding the specific test or gauger service this entity is accredited or approved to perform may be directed to the U.S. Customs and Border Protection by calling (202) 344–1060. The inquiry may also be sent to *cbp.labhq@dhs.gov.* Please reference the Web site listed below for a complete listing of CBP approved gaugers and accredited laboratories. *http://cbp.gov/linkhandler/cgov/trade/basic_trade/labs_scientific_svcs/commercial_gaugers/gaulist.ctt/gaulist.pdf.*

Dated: March 19, 2013.

Ira S. Reese,

Executive Director, Laboratories and Scientific Services.

[FR Doc. 2013–07075 Filed 3–27–13; 8:45 am]

BILLING CODE 9111–14–P

DEPARTMENT OF HOMELAND SECURITY

U.S. Customs and Border Protection

Accreditation and Approval of SGS North America, Inc., as a Commercial Gauger and Laboratory

AGENCY: U.S. Customs and Border Protection, Department of Homeland Security.

ACTION: Notice of accreditation and approval of SGS North America, Inc., as a commercial gauger and laboratory.

SUMMARY: Notice is hereby given, pursuant to CBP regulations, that SGS North America, Inc., has been approved to gauge and accredited to test petroleum and petroleum products, organic chemicals and vegetable oils for customs purposes for the next three years as of August 30, 2012.

DATES: *Effective Dates:* The accreditation and approval of SGS North America, Inc., as commercial gauger and laboratory became effective on August 30, 2012. The next triennial inspection date will be scheduled for August 2015.

FOR FURTHER INFORMATION CONTACT: Approved Gauger and Accredited Laboratories Manager, Laboratories and Scientific Services, U.S. Customs and Border Protection, 1300 Pennsylvania Avenue NW., Suite 1500N, Washington, DC 20229, tel. 202–344–1060.

SUPPLEMENTARY INFORMATION: Notice is hereby given pursuant to 19 CFR 151.12 and 19 CFR 151.13, that SGS North America, Inc., 11729 Port Road, Seabrook, TX 77586, has been approved to gauge and accredited to test petroleum and petroleum products, organic chemicals and vegetable oils for customs purposes, in accordance with the provisions of 19 CFR 151.12 and 19 CFR 151.13. Anyone wishing to employ this entity to conduct laboratory analyses and gauger services should request and receive written assurances from the entity that it is accredited or approved by the U.S. Customs and Border Protection to conduct the specific test or gauger service requested. Alternatively, inquiries regarding the specific test or gauger service this entity is accredited or approved to perform may be directed to the U.S. Customs and Border Protection by calling (202) 344–1060. The inquiry may also be sent to *cbp.labhq@dhs.gov.* Please reference the Web site listed below for a complete listing of CBP approved gaugers and accredited laboratories. *http://cbp.gov/linkhandler/cgov/trade/basic_trade/labs_scientific_svcs/commercial_gaugers/gaulist.ctt/gaulist.pdf.*

Dated: March 19, 2013.

Ira S. Reese,

Executive Director, Laboratories and Scientific Services.

[FR Doc. 2013–07077 Filed 3–27–13; 8:45 am]

BILLING CODE 9111–14–P

DEPARTMENT OF THE INTERIOR

Fish and Wildlife Service

[FWS–R5–R–2012–N170; BAC–4311–K9–S3]

Montezuma National Wildlife Refuge, Cayuga, Seneca, and Wayne Counties, NY; Final Comprehensive Conservation Plan and Finding of No Significant Impact for Environmental Assessment

AGENCY: Fish and Wildlife Service, Interior.

ACTION: Notice of availability.

SUMMARY: We, the U.S. Fish and Wildlife Service (Service), announce the availability of a final comprehensive conservation plan (CCP) and finding of no significant impact (FONSI) for the environmental assessment (EA) for Montezuma National Wildlife Refuge (NWR), located in Cayuga, Seneca, and Wayne Counties, New York. In this final CCP, we describe how we will manage the refuge for the next 15 years.

ADDRESSES: You may view or obtain copies by any of the following methods. You may request a hard copy or a CD–ROM of the document.

Agency Web site: Download a copy of the document at *http://www.fws.gov/northeast/planning/Montezuma/ccphome.html.*

Email: Send requests to *northeastplanning@fws.gov.* Please include ''Montezuma NWR Final CCP'' in the subject line of the message.

Mail: Lia McLaughlin, Natural Resource Planner, U.S. Fish and Wildlife Service, 300 Westgate Center Drive, Hadley, MA 01035.

Fax: Attention: Lia McLaughlin, 413–253–8468.

In-Person Viewing or Pickup: Call 315–568–5987 to make an appointment (necessary for view/pickup only) during regular business hours at 3395 Route 5/20 East, Seneca Falls, NY 13148–9778.

FOR FURTHER INFORMATION CONTACT: Tom Jasikoff, Refuge Manager, 315–568–5987 (phone), or Lia McLaughlin, Planning Team Leader, 413–253–8575 (phone); email: *northeastplanning@fws.gov.*

SUPPLEMENTARY INFORMATION:

Introduction

With this notice, we finalize the CCP process for Montezuma NWR. We started this process through a notice in the **Federal Register** (75 FR 25286; May 7, 2010). We released the draft CCP and EA to the public, announcing and requesting comments in a notice of availability in the **Federal Register** (75 FR 25286; May 22, 2012).

Montezuma NWR was established in 1938 to provide nesting, feeding, and resting habitat for waterfowl and other migratory birds. Situated in Seneca, Wayne, and Cayuga Counties, the refuge currently encompasses 9,809 acres. Refuge habitats include emergent marshes and shallow water mudflats, open water, bottomland floodplain forest, old fields, shrublands, croplands, grassland, and successional forest. The refuge is part of the Montezuma Wetlands Complex, an area identified by the Service, the New York State Department of Environmental Conservation (NYSDEC), and other partners for its role in the conservation of migratory birds, particularly waterfowl. The refuge's public use program provides wildlife-oriented

educational and recreational opportunities compatible with refuge management objectives. Public use facilities and programs include several trails, a visitor center, observation towers and platforms, fishing access sites, a hunting program, educational programs and materials, guided tours, and other special programs.

We announce our decision and the availability of the FONSI for the final CCP for Montezuma NWR in accordance with National Environmental Policy Act (NEPA) (42 U.S.C. 4321 *et seq.)* requirements. We completed a thorough analysis of impacts on the human environment, which we included in the draft CCP and EA.

The CCP will guide us in managing and administering Montezuma NWR for the next 15 years. Alternative B, as described in the refuge's draft CCP and EA, and with the modifications described below, is the foundation for the final CCP.

Background

The National Wildlife Refuge System Administration Act of 1966 (16 U.S.C. 668dd–668ee) (Refuge Administration Act), as amended by the National Wildlife Refuge System Improvement Act of 1997, requires us to develop a CCP for each national wildlife refuge. The purpose for developing a CCP is to provide refuge managers with a 15-year plan for achieving refuge purposes and contributing toward the mission of the National Wildlife Refuge System, consistent with sound principles of fish and wildlife management, conservation, legal mandates, and our policies. In addition to outlining broad management direction on conserving wildlife and their habitats, CCPs identify wildlife-dependent recreational opportunities available to the public, including opportunities for hunting, fishing, wildlife observation and photography, and environmental education and interpretation. We will review and update the CCP at least every 15 years in accordance with the Refuge Administration Act.

CCP Alternatives, Including the Selected Alternative

During the public scoping process, we, the NYSDEC, other governmental partners, and the public raised several issues. To address these issues, we developed and evaluated three alternatives in the draft CCP and EA. Here we present a brief summary of each of the alternatives; a full description of each alternative is in the draft CCP and EA.

Management Alternatives

Alternative A (Current Management)

Alternative A satisfies the NEPA requirement of a ''No Action'' alternative, which we define as ''continuing current management.'' It describes our existing management priorities and activities, and serves as a baseline for comparing and contrasting alternatives B and C. It would maintain our present levels of approved refuge staffing and the biological and visitor programs now in place. We would continue to focus on managing impoundments to provide emergent marsh and open water habitats for migrating and nesting wading birds, marshbirds, waterfowl, shorebirds, and other wildlife. We would also continue to actively control invasive species, manage grassland habitats, and improve riparian and other forested habitats. We would continue to provide opportunities for all six priority public uses: hunting, fishing, wildlife observation, photography, environmental education, and interpretation.

Alternative B (Service-preferred Alternative)

This alternative is the Service-preferred alternative. It combines the actions we believe would most effectively achieve the refuge's purposes, vision, and goals, and respond to the issues raised during the scoping period. Under alternative B, emergent marsh management would remain a priority on the refuge. We would focus efforts on improving existing emergent wetland habitat and restoring additional acres, and re-establishing wetland and riparian forests, where feasible. More upland forest would be promoted through succession or planting native species. Additionally, we would continue to manage about 400 acres of shrublands, and grassland management would focus on creating larger patches with less edge, resulting in fewer grassland acres overall. Opportunities for visitors to participate in priority public uses would increase. Added trails, viewing areas, and photography blinds would support additional opportunities for wildlife observation and photography. We would develop a formal, curriculum-based environmental education program. Environmental interpretation would be enhanced through updated interpretive displays and associated services. The refuge would be opened to new hunting opportunities, and we would provide more accessible sites. Fishing opportunities would be increased by providing additional access to canal waters for anglers.

Alternative C (Less Active Habitat Management)

Under alternative C, most emergent marsh habitat on the refuge would be allowed to convert to bottomland floodplain forest. Only the Main Pool, Tschache Pool, and Visitor Center Wetland impoundments would be maintained. Newly acquired lands would not be converted to impoundments. Natural succession would play a larger role in shaping vegetative communities on the refuge compared to alternatives A and B. We would allow most early successional habitats in the uplands to revert to forests. Compared to alternative A, opportunities for visitors to participate in priority public uses would increase under this alternative, but not to the extent proposed under alternative B. We would develop a few additional sites to support wildlife observation and photography. Interpretation would be somewhat increased with the expansion of the visitor contact station. Interpretive messages would be changed, reflecting the different focus of refuge management. Hunting opportunities would increase, similar to alternative B; however, waterfowl hunting would remain unchanged. Fishing opportunities would be the same as alternative B.

Comments

We solicited comments on the draft CCP and EA for Montezuma NWR from May 22 to June 21, 2012 (77 FR 25286). During the comment period, we received 36 sets of responses, including comments from public meetings, a phone call, email, and letters. We evaluated all of the substantive comments we received, and include a summary of those comments, and our responses to them, as appendix K in the final CCP.

Selected Alternative

We have selected alternative B for implementation, with the following modifications:

- We increased the amount of shrubland we intend to maintain to 396 acres (similar to alternative A), which is about 100 acres more than originally proposed under alternative B of the draft CCP and EA.
- We included additional information in chapter 4, under ''Protecting Land and Proposed Land Expansion,'' to explain that we will evaluate newly acquired lands for their potential for habitat restoration (i.e., emergent marsh, forest, shrubland, grassland).

• We have added estimates of hazard abatement surveys to table 4.1, and have revised the cost estimates for demolition.

• We added a section titled ''Alternatives Considered but not Fully Developed'' to the final hunt program EA (appendix E), which includes a discussion on closing the refuge to hunting.

• We modified the land protection plan (appendix F) to incorporate climate change information from the CCP and estimated numbers of migratory birds and breeding marshbirds that could use emergent marsh habitats, once lands have been acquired and restored. We also revised the land protection plan and final CCP to clarify which parcels are existing refuge lands, which have been previously added to the refuge's approved acquisition boundary but not purchased, and which would be included in the refuge expansion.

• We corrected the final fire management plan EA to show that alternative B is both the current management (the no action alternative) and the preferred-alternative.

We have selected alternative B to implement for Montezuma NWR, with these minor changes, for several reasons. Alternative B incorporates a combination of actions that, in our professional judgment, work best towards achieving the refuge's purposes, vision, and goals, Service policies, and the goals of other State and regional conservation plans. We also believe that alternative B most effectively addresses key issues raised during the planning process. The basis of our decision is detailed in the FONSI (appendix L in the final CCP).

Public Availability of Documents

You can view or obtain the final CCP, including the FONSI, as indicated under **ADDRESSES**, and at the following location:

• Public Library: the Seneca Falls Library, located at 47 Cayuga Street, Seneca Falls, NY 13148, during regular library hours.

Dated: February 21, 2013.

Deborah Rocque,

Acting Regional Director, Northeast Region.

[FR Doc. 2013–07237 Filed 3–27–13; 8:45 am]

BILLING CODE 4310–55–P

DEPARTMENT OF THE INTERIOR

Fish and Wildlife Service

[Docket No. FWS–R4–ES–2012–0081; FF04EF1000 123 FX.ES11130400000D2]

Marine Mammal Protection Act; Draft Revised Stock Assessment Reports for Two Stocks of West Indian Manatee

AGENCY: Fish and Wildlife Service, Interior.

ACTION: Notice of availability; request for comments.

SUMMARY: In accordance with the Marine Mammal Protection Act of 1972, as amended (MMPA), and its implementing regulations, we, the U.S. Fish and Wildlife Service (Service) have developed draft revised marine mammal stock assessment reports (SAR) for two West Indian manatee stocks: the Puerto Rico stock of Antillean manatees and the Florida manatee stock. We now make the SARs available for public review and comment.

DATES: Comments must be received by June 26, 2013.

ADDRESSES: *Document Availability:* You may view the draft revised stock assessment reports on *http://www.regulations.gov* under Docket No. FWS–R4–ES–2012–0081. You may also view them in Adobe Acrobat format at *http://www.fws.gov/caribbean/es/manatee.html* (Puerto Rico stock) or at *http://www.fws.gov/northflorida/* (Florida stock). Alternatively, you may contact the Field Supervisor, U.S. Fish and Wildlife Service, Caribbean Ecological Services Office, P.O. Box 491, Boquerón, PR 00622; telephone: 787–851–7297 (Puerto Rico stock) or the Field Supervisor, U.S. Fish and Wildlife Service, North Florida Ecological Services Office, 7915 Baymeadows Way, Suite 200, Jacksonville, FL 32256–7517; telephone: 904–731–3336 (Florida stock).

Written Comments: You may submit comments on the draft revised stock assessment reports by one of the following methods:

• *U.S. mail or hand-delivery:* Public Comments Processing, Attn: Docket No. FWS–R4–ES–2012–0081; Division of Policy and Directives Management; U.S. Fish and Wildlife Service; 4401 N. Fairfax Drive, MS 2042–PDM; Arlington, VA 22203; or

• *Federal eRulemaking Portal: http://www.regulations.gov.* Follow the instructions for submitting comments to Docket No. FWS–R4–ES–2012–0081.

Please indicate to which revised stock assessment report(s)—the Antillean manatee or Florida manatee—your comments apply. We will not accept email or faxes. We will post all comments on *http://www.regulations.gov.* This generally means that we will post any personal information you provide us.

FOR FURTHER INFORMATION CONTACT: Jan Zegarra, Caribbean Ecological Services Field Office, 787–851–7297, ext. 220 (telephone), for information about the draft revised SAR for the Puerto Rico stock of Antillean manatees, and Jim Valade, North Florida Ecological Services Office, 904–731–3116 (telephone), for information about the draft revised SAR for the Florida manatee. Persons who use a telecommunications device for the deaf may call the Federal Information Relay Service at 800–877–8339.

SUPPLEMENTARY INFORMATION:

Background

We announce for review and comment the availability of draft revised marine mammal stock assessment reports (SAR) for the Puerto Rico stock of Antillean manatees (*Trichechus manatus manatus*) and the Florida manatee stock (*Trichechus manatus latirostris*).

Under the MMPA (16 U.S.C. 1361 et seq.) and its implementing regulations in the Code of Federal Regulations (CFR) at 50 CFR part 18, we regulate the taking, possession, transportation, purchasing, selling, offering for sale, exporting, and importing of marine mammals. One of the goals of the MMPA is to ensure that stocks of marine mammals occurring in waters under U.S. jurisdiction do not experience a level of human-caused mortality and serious injury that is likely to cause the stock to be reduced below its *optimum sustainable population level* (OSP). OSP is defined under the MMPA as '' * * * the number of animals which will result in the maximum productivity of the population or the species, keeping in mind the carrying capacity of the habitat and the health of the ecosystem of which they form a constituent element'' (16 U.S.C. 1362(3)(9)).

To help accomplish the goal of maintaining marine mammal stocks at their OSPs, section 117 of the MMPA requires the Service and the National Marine Fisheries Service (NMFS) to prepare a SAR for each marine mammal stock that occurs in waters under U.S. jurisdiction. Each SAR must include:

1. A description of the stock and its geographic range;

2. A minimum population estimate, maximum net productivity rate, and current population trend;

3. An estimate of human-caused mortality and serious injury;

4. A description of commercial fishery interactions;

5. A categorization of the status of the stock; and

6. An estimate of the *potential biological removal* (PBR) level.

The MMPA defines the PBR as ''the maximum number of animals, not including natural mortalities, that may be removed from a marine mammal stock while allowing that stock to reach or maintain its OSP'' (16 U.S.C. 1362(3)(20)). The PBR is the product of the minimum population estimate of the stock (N_{min}); one-half the maximum theoretical or estimated net productivity rate of the stock at a small population size (R_{max}); and a recovery factor (F_r) of between 0.1 and 1.0. This can be written as:

$PBR = (N_{min})(½ \text{ of the } R_{max})(F_r)$

Section 117 of the MMPA requires the Service and NMFS to review the SARs (a) at least annually for stocks that are specified as strategic stocks, (b) at least annually for stocks for which significant new information is available, and (c) at least once every 3 years for all other stocks. If our review of the status of a stock indicates that it has changed or may be more accurately determined, the SAR must be revised accordingly.

A *strategic stock* is defined in the MMPA as a marine mammal stock ''(a) for which the level of direct human-caused mortality exceeds the PBR level; (b) which, based on the best available scientific information, is declining and is likely to be listed as a threatened species under the Endangered Species Act of 1973, as amended (16 U.S.C. 1531 *et seq.*) [the ''ESA''], within the foreseeable future; or (c) which is listed as a threatened or endangered species under the ESA, or is designated as depleted under [the MMPA]'' (16 U.S.C. 1362(3)(19)).

SARs for both the Puerto Rico stock of Antillean manatees and the Florida manatee were last revised on December 30, 2009. Both are classified as strategic stocks by virtue of their listing as an endangered species under the ESA. The Service reviewed the SARs in 2010 and concluded that a revision of these SARs was not warranted at that time because the status of these stocks had not changed since 2009, nor could they be more accurately determined. Upon subsequent review in 2011, the Service determined that revision was warranted for both stocks. These draft revised SARs have been written in consideration of the best scientific information available with advice from the Atlantic Scientific Review Group.

The following table summarizes the information we are now making available in the draft revised stock assessment reports for the Puerto Rico stock of Antillean manatees and Florida manatees, which lists the stock's N_{min}, R_{max}, F_r, PBR, annual estimated human-caused mortality and serious injury, and status. After consideration of any public comments we receive, the Service will revise and finalize the SARs as appropriate for these stocks. We will publish a notice of availability and summary of the final SARs, including responses to submitted comments.

SUMMARY: DRAFT REVISED STOCK ASSESSMENT REPORTS FOR THE ANTILLEAN AND FLORIDA MANATEE

West Indian manatee stocks	N_{min}	R_{max}	F_r	PBR	Annual estimated human-caused mortality (5-year average)	Stock status
Antillean manatees (Puerto Rico)	178	0.04	0.1	0	3	Strategic.
Florida manatees	4,834	0.062	0.1	14	94	Strategic.

Public Availability of Comments

Before including your address, phone number, email address, or other personal identifying information in your comment, you should be aware that your entire comment—including your personal identifying information—may be made publicly available at any time. While you can ask us in your comment to withhold your personal identifying information from public review, we cannot guarantee that we will be able to do so.

References

In accordance with section 117(b)(1) of the MMPA, we include in this notice a list of the sources of information or published reports upon which we based the draft revised SAR. The Service consulted technical reports, conference proceedings, refereed journal publications, and scientific studies prepared or issued by Federal agencies, nongovernmental organizations, and individuals with expertise in the fields of marine mammal biology and ecology, population dynamics, modeling, and commercial fishing practices.

These agencies and organizations include: The Service, the U.S. Geological Survey, the National Oceanic and Atmospheric Administration, the Puerto Rico Department of Natural and Environmental Resources, the Georgia Department of Natural Resources, the Florida Fish and Wildlife Conservation Commission, Hubbs Sea World Research Institute, the Gulf and Caribbean Fisheries Institute, the Caribbean Stranding Network, and Mote Marine Laboratory. In addition, the Service consulted publications such as the Journal of Wildlife Management, Marine Mammal Science, Marine Pollution Bulletin, Marine Technology Society Journal, Wildlife Monographs, Gulf and Caribbean Research, Journal of Zoo and Wildlife Medicine, Molecular Ecology, and Molecular Ecology Notes, as well as other refereed journal literature, technical reports, and data sources in the development of these SARs.

A complete list of citations to the scientific literature relied on for each of these SARs is available on the Federal eRulemaking portal (*http://www.regulations.gov*) under Docket No. FWS–R4–ES–2012–0081. The list can also be viewed in Adobe Acrobat format at *http://www.fws.gov/caribbean/es/manatee.html* or at *http://www.fws.gov/northflorida/.*

In the past the Service has published a complete list of citations to each technical report, scientific paper, and journal publication upon which the draft revised SAR is based at the end of the notice of availability. However, in order for the public to more easily understand how the agency has used and interpreted the sources relied upon in the draft revised SARs, the Service is making the complete list of literature citations available at the end of each of the draft revised SARs. In recognition that the public typically reviews our draft SARs, or any revision thereof, in conjunction with the list of supporting literature citations found at the end of draft SARs, the Service believes it is unnecessary to additionally publish the complete list of references in this notice

of availability. Instead, we are only including the complete list of references at the end of the draft revised SARs, which is available to the public through the Government's regulations portal and our own Web pages (see **ADDRESSES** section above).

Authority

The authority for this action is the Marine Mammal Protection Act of 1972, as amended (16 U.S.C. 1361 et al.).

Dated: March 14, 2013.

Stephen Guertin,

Deputy Director, Fish and Wildlife Service.

[FR Doc. 2013–07157 Filed 3–27–13; 8:45 am]

BILLING CODE 4310–55–P

DEPARTMENT OF THE INTERIOR

U.S. Geological Survey

[GX13GG009950000]

Scientific Earthquake Studies Advisory Committee

AGENCY: U.S. Geological Survey.

ACTION: Notice of meeting.

SUMMARY: Pursuant to Public Law 106–503, the Scientific Earthquake Studies Advisory Committee (SESAC) will hold its next meeting at the Incorporated Research Institutions for Seismology, 1200 New York Avenue, Suite 400, Washington, DC 20005. The Committee is comprised of members from academia, industry, and State government. The Committee shall advise the Director of the U.S. Geological Survey (USGS) on matters relating to the USGS's participation in the National Earthquake Hazards Reduction Program.

The Committee will receive reports on the status of activities of the Program and progress toward Program goals and objectives. The Committee will assess this information and provide guidance on the future undertakings and direction of the Earthquake Hazards Program. Focus topics for this meeting include induced seismicity, earthquake early warning and international activities.

Meetings of the Scientific Earthquake Studies Advisory Committee are open to the public.

DATES: April 4–5, 2013, commencing at 8:30 a.m. on the first day and adjourning at Noon on April 5, 2013.

Contact: Dr. William Leith, U.S. Geological Survey, MS 905, 12201 Sunrise Valley Drive, Reston, Virginia 20192, (703) 648–6786, *wleith@usgs.gov.*

Dated: March 22, 2013.

David J. Newman,

U.S. Geological Survey Federal Register Liaison.

[FR Doc. 2013–07133 Filed 3–27–13; 8:45 am]

BILLING CODE 4311–AM–P

DEPARTMENT OF THE INTERIOR

Bureau of Indian Affairs

Renewal of Agency Information Collection for Acquisition of Trust Land

AGENCY: Bureau of Indian Affairs, Interior.

ACTION: Notice of request for comments.

SUMMARY: In compliance with the Paperwork Reduction Act of 1995, the Bureau of Indian Affairs is seeking comments on the renewal of Office of Management and Budget (OMB) approval for the collection of information for Acquisition of Trust Land authorized by OMB Control Number 1076–0100. This information collection expires July 31, 2013.

DATES: Submit comments on or before May 28, 2013.

ADDRESSES: You may submit comments on the information collection to Matthew Kirkland, Bureau of Indian Affairs, Division of Real Estate Services, MS–4639–MIB, 1849 C Street NW., Washington, DC 20240; facsimile: (202) 219–1065; email: *Matthew.Kirkland@bia.gov.*

FOR FURTHER INFORMATION CONTACT: Matthew Kirkland, (202) 208–3615.

SUPPLEMENTARY INFORMATION:

I. Abstract

The Bureau of Indian Affairs (BIA) is seeking renewal of the approval for the information collection conducted under 25 CFR 151, Land Acquisitions, for the United States to take land into trust for individual Indians and Indian tribes. This information collection allows BIA to review applications for compliance with regulatory and statutory requirements. No specific form is used. No third party notification or public disclosure burden is associated with this collection.

II. Request for Comments

The Bureau of Indian Affairs requests your comments on this collection concerning: (a) The necessity of this information collection for the proper performance of the functions of the agency, including whether the information will have practical utility; (b) The accuracy of the agency's estimate of the burden (hours and cost) of the collection of information, including the validity of the methodology and assumptions used; (c) Ways we could enhance the quality, utility, and clarity of the information to be collected; and (d) Ways we could minimize the burden of the collection of the information on the respondents.

Please note that an agency may not conduct or sponsor, and an individual need not respond to, a collection of information unless it has a valid OMB Control Number.

It is our policy to make all comments available to the public for review at the location listed in the **ADDRESSES** section. Before including your address, phone number, email address or other personal identifying information in your comment, you should be aware that your entire comment—including your personal identifying information—may be made publicly available at any time. While you can ask us in your comment to withhold your personal identifying information from public review, we cannot guarantee that we will be able to do so.

III. Data

OMB Control Number: 1076–0100.

Title: Acquisition of Trust Land, 25 CFR 151.

Brief Description of Collection: Submission of this information allows Bureau of Indian Affairs (BIA) to review applications for the acquisition of land into trust status by the United States on behalf of individual Indians and Indian tribes, pursuant to 25 CFR 151. The information also allows the Secretary to comply with the National Environmental Policy Act and to determine if title to the subject property is marketable and unencumbered. No specific form is used, but respondents supply information and data in accordance with 25 CFR 151, so that BIA may make an evaluation and determination on the application. Response is required to obtain a benefit.

Type of Review: Extension without change of currently approved collection.

Respondents: Individual Indians and Indian tribes seeking acquisition of land into trust status.

Number of Respondents: 1,000.

Number of Responses: 1,000.

Frequency of Response: Once per each tract of land to be acquired.

Estimated Time per Response: Ranges from 60 to 110 hours.

Estimated Total Annual Hour Burden: 67,800 hours.

Dated: March 20, 2013.

Christine Cho,

Acting Assistant Director for Information Resources.

[FR Doc. 2013–07217 Filed 3–27–13; 8:45 am]

BILLING CODE 4310–4J–P

DEPARTMENT OF THE INTERIOR

Bureau of Indian Affairs

Renewal of Agency Information Collection for Tribal Energy Resource Agreements

AGENCY: Bureau of Indian Affairs, Interior.

ACTION: Notice of request for comments.

SUMMARY: In compliance with the Paperwork Reduction Act of 1995, the Assistant Secretary—Indian Affairs is seeking comments on the renewal of Office of Management and Budget (OMB) approval for the collection of information titled ''Tribal Energy Resource Agreements'' (TERAs) under the Office of Indian Energy and Economic Development Office (IEED) authorized by OMB Control Number 1076–0167. This information collection expires June 30, 2013.

DATES: Submit comments on or before May 28, 2013.

ADDRESSES: You may submit comments on the information collection to David Johnson, Office of Indian Energy and Economic Development, 1951 Constitution Avenue NW., Room 20–SIB, Washington, DC 20240; email *DavidB.Johnson@bia.gov;* or facsimile: (202) 208–4564.

FOR FURTHER INFORMATION CONTACT: David Johnson, (202) 208–3026.

SUPPLEMENTARY INFORMATION:

I. Abstract

The Energy Policy Act of 2005, 25 U.S.C. 3503 authorizes the Secretary of the Interior to approve individual Tribal Energy Resource Agreements (TERAs). The intent of these agreements is to promote tribal oversight and management of energy and mineral resource development on tribal lands and further the goal of Indian self-determination. A TERA offers a tribe an alternative for developing energy-related business agreements and awarding leases and granting rights-of-way for energy facilities without having to obtain further approval from the Secretary.

This information collection conducted under TERA regulations at 25 CFR 224 will allow IEED to determine the capacity of tribes to manage the development of energy resources on tribal lands. Information collection:

- Enables IEED to engage in a consultation process with tribes that is designed to foster optimal pre-planning of development proposals and speed up the review and approval process for TERA agreements;
- Provides wide public notice and opportunity for review of TERA agreements by the public, industry, and government agencies;
- Ensures that the public has an avenue for review of the performance of tribes in implementing a TERA;
- Creates a process for preventing damage to sensitive resources as well as ensuring that the public has fully communicated with the tribe in the petition process;
- Ensures that a tribe is fully aware of any attempt by the Department of the Interior to resume management authority over energy resources on tribal lands; and
- Ensures that the tribal government fully endorses any relinquishment of a TERA.

II. Request for Comments

The Assistant Secretary—Indian Affairs requests your comments on this collection concerning: (a) The necessity of this information collection for the proper performance of the functions of the agency, including whether the information will have practical utility; (b) The accuracy of the agency's estimate of the burden (hours and cost) of the collection of information, including the validity of the methodology and assumptions used; (c) Ways we could enhance the quality, utility, and clarity of the information to be collected; and (d) Ways we could minimize the burden of the collection of the information on the respondents.

Please note that an agency may not conduct or sponsor, and an individual need not respond to, a collection of information unless it has a valid OMB Control Number.

It is our policy to make all comments available to the public for review at the location listed in the **ADDRESSES** section. Before including your address, phone number, email address or other personal identifying information in your comment, you should be aware that your entire comment—including your personal identifying information—may be made publicly available at any time. While you can ask us in your comment to withhold your personal identifying information from public review, we cannot guarantee that we will be able to do so.

III. Data

OMB Control Number: 1076–0167.

Title: Tribal Energy Resource Agreements, 25 CFR 224.

Brief Description of Collection: Submission of this information is required for Indian tribes to apply for, implement, reassume, or rescind a TERA that has been entered into in accordance with the Energy Policy Act of 2005 and 25 CFR 224. This collection also requires the tribe to notify the public of certain actions. A response is required to obtain a benefit.

Type of Review: Extension without change of currently approved collection.

Respondents: Federally recognized Indian tribes.

Number of Respondents: 14.

Frequency of Response: On occasion.

Estimated Time per Response: Ranges from 32 hours to 1,080 hours.

Estimated Total Annual Hour Burden: 10,752 hours.

Estimated Total Non-hour Cost Burden: $48,200.

Dated: March 20, 2013.

Christine Cho,

Acting Assistant Director for Information Resources.

[FR Doc. 2013–07212 Filed 3–27–13; 8:45 am]

BILLING CODE 4310–4M–P

DEPARTMENT OF THE INTERIOR

Bureau of Indian Affairs

Notice of Service Area Designation

AGENCY: Bureau of Indian Affairs, Interior.

ACTION: Notice.

SUMMARY: This notice is published to exercise the authority delegated by the Secretary of the Interior to the Assistant Secretary—Indian Affairs to provide notice, under the regulations, of the service area designation for the Pit River Tribe that is recognized and eligible to receive services from the Bureau of Indian Affairs (BIA).

DATES: This service area designation is effective as of March 28, 2013.

FOR FURTHER INFORMATION CONTACT: Sue Settles, Office of Indian Services, Bureau of Indian Affairs, Telephone (202) 208–5113, email address: *Sue.Settles@bia.gov*.

SUPPLEMENTARY INFORMATION: In accordance with 25 CFR part 20, Financial Assistance and Social Services Programs, the Assistant Secretary—Indian Affairs designates the following locale as a service area appropriate for the extension of BIA financial assistance and/or social

services. The part 20 regulations have full force and effect when extending the BIA financial assistance and/or social services into the service area location. Without officially designated service areas, such services are provided only to Indian people who live within the reservation boundaries. Under 25 CFR 20.201, the Pit River Tribe is now authorized to extend financial assistance and social services to eligible tribal members (and their family members who are Indian) who reside outside the boundaries of the federally recognized tribe's reservation within the areas designated below:

Tribe: Pit River Tribe.

Service Area Location: The 100 square mile area of Pit River Tribe jurisdiction, as stated in the Pit River Tribe constitution, in the counties of Shasta, Siskiyou, Modoc, and Lassen in the State of California.

Dated: March 20, 2013.

Kevin K. Washburn,

Assistant Secretary—Indian Affairs.

[FR Doc. 2013–07207 Filed 3–27–13; 8:45 am]

BILLING CODE 4310–4J–P

DEPARTMENT OF THE INTERIOR

National Park Service

[NPS–WASO–CR–HPS–12019; PPWOCRADI0, PCU00RP14.R50000]

Information Collection Request Sent to the Office of Management and Budget (OMB) for Approval; Historic Preservation Certifications

AGENCY: National Park Service, Interior.

ACTION: Notice; request for comments.

SUMMARY: We (National Park Service, NPS) have sent an Information Collection Request (ICR) to OMB for review and approval. We summarize the ICR below and describe the nature of the collection and the estimated burden and cost. This information collection is scheduled to expire on March 31, 2013. We may not conduct or sponsor and a person is not required to respond to a collection of information unless it displays a currently valid OMB control number. However, under OMB regulations, we may continue to conduct or sponsor this information collection while it is pending at OMB.

DATES: You must submit comments on or before April 29, 2013.

ADDRESSES: Send your comments and suggestions on this information collection to the Desk Officer for the Department of the Interior at OMB–OIRA at (202) 395–5806 (fax) or *OIRA_Submission@omb.eop.gov* (email). Please provide a copy of your comments to the Information Collection Clearance Officer, National Park Service, 1201 I Street NW., MS 1237, Washington, DC 20005 (mail); or *madonna_baucum@nps.gov* (email). Please reference OMB Control Number 1024–0009 in the subject line of your comments.

FOR FURTHER INFORMATION CONTACT: To request additional information about this ICR, contact Michael J. Auer at (202) 354–2031 or *michael_auer@nps.gov* (email). You may review the ICR online at *http://www.reginfo.gov.* Follow the instructions to review Department of the Interior collections under review by OMB.

SUPPLEMENTARY INFORMATION:

OMB Control Number: 1024–0009.

Title: Historic Preservation Certifications, 36 CFR Part 67.

Form Numbers: 10–168, 10–168a, 10–168b, 10–168c, 10–168d, and 10–168e.

Type of Request: Revision of a currently approved collection.

Estimated Number of Annual Respondents: 3,300.

Description of Respondents: Individuals; businesses; and State, local, or tribal governments.

Respondent's Obligation: Required to obtain or retain a benefit.

Frequency of Collection: On occasion.

Activity	Number of responses	Completion time per response*	Total annual burden hours
Part 1—Form 10–168:			
Nonconsultants	558	27	15,066
Consultants	559	0	
Part 2—Form 10–168a:			
Nonconsultants	590	51	30,090
Consultants	591	0	
Amendment—Form 10–168b:			
Nonconsultants	908	17	15,436
Consultants	909	0	
Part 3—Form 10–168c:			
Nonconsultants	395	14	5,530
Consultants	395	0	
State Review:			
Form 10–168d	1,117	2.5	2,793
Form 10–168e (for Part 2s)	1,181	5	5,905
Form 10–168e (for Part 3s)	790	3.5	2,765
Form 10–168e (for Amds.)	1,817	2.5	4,543
Certification of Statutes	2	5	10
Certification of Historic Districts	2	60	120
Appeals:			
Nonconsultants	4	40	160
Consultants	30	0	
TOTALS	9,848	.....	82,418

* Burden for consultants is included in nonhour burden costs.

Estimated Annual Nonhour Burden Cost: $11,497,474, for application fees, consultant costs, and other costs such as printing photographs and architectural drawings.

Abstract: We administer the Federal Historic Preservation Tax Incentives program with the Internal Revenue Service in partnership with State Historic Preservation Offices. The tax incentives promote the rehabilitation of income-producing historic structures of every period, size, style and type. Through this program, underutilized or vacant schools, warehouses, factories, retail stores, apartments, hotels, houses, offices, and other buildings throughout the country have been returned to useful life in a manner that maintains their historic character.

Owners of historic buildings use the Historic Preservation Certification Application (Forms 10–168, 10–168a, 10–168b, and 10–168c) to apply for Federal tax incentives. Sections 47 and 170 of the Internal Revenue Code require the Secretary of the Interior to make certain ''certifications'' for owners of historic buildings seeking Federal tax incentives for historic preservation. Department of the Interior regulations (36 CFR 67) require an owner of an historic building to complete an application form to receive these certifications for the Federal tax incentives. These incentives include a 20% Federal income tax credit for the rehabilitation of historic buildings and an income tax deduction for the donation of easements on historic properties. The Internal Revenue Code also provides a 10% Federal income tax credit for the rehabilitation of nonhistoric buildings built before 1936. Owners of nonhistoric buildings in historic districts must use the application to obtain a certification from the Secretary of the Interior that their building does *not* contribute to the significance of the historic district before they can claim the lesser tax credit for rehabilitation.

In accordance with 36 CFR 67, we also collect information for: (1) Certifications of State and local statutes (§ 67.8), (2) certifications of State or local historic districts (§ 67.9), and (3) appeals (§ 67.10).

State Historic Preservation Offices (SHPOs) are the first point of contact for property owners wishing to use the rehabilitation tax credit. They help applicants determine if an historic building is eligible for Federal or State historic preservation tax incentives, provide guidance on an application before or after the project begins, and provide advice on appropriate preservation work. SHPOs use Forms 10–168d and 10–168e to make recommendations to NPS.

Comments: On August 30, 2012, we published in the **Federal Register** (77 FR 52757) a notice of our intent to request that OMB renew approval for this information collection. In that notice, we solicited comments for 60 days, ending on October 29, 2012. We received one comment in response to this notice. The commenter suggested: (1) That the application form be modified to include a mechanism for applicants to include relevant information regarding economic and technical feasibility considerations and the application of the Secretary of the Interior's Standards for Rehabilitation, the standards used to evaluate applications under the program, and (2) that the application instructions clearly state that the economic and technical feasibility are important and required considerations pursuant to 36 CFR 67.7(b). We did not modify the information collection in response to this comment. We already collect this information as part of the application (Detailed Description of Rehabilitation Work). Economic and technical feasibility is not a separate consideration, but one of several considerations identified in 36 CFR 67.7(b) as part of the agency's review of proposed rehabilitation work. The application instructions are not meant to supersede the regulations governing the program or replace other guidance and materials. The instructions specifically refer to the regulations and state that these regulations take precedence over the application instructions.

We again invite comments concerning this information collection on:

- Whether or not the collection of information is necessary, including whether or not the information will have practical utility;
- The accuracy of our estimate of the burden for this collection of information;
- Ways to enhance the quality, utility, and clarity of the information to be collected; and
- Ways to minimize the burden of the collection of information on respondents.

Comments that you submit in response to this notice are a matter of public record. Before including your address, phone number, email address, or other personal identifying information in your comment, you should be aware that your entire comment, including your personal identifying information, may be made publicly available at anytime. While you can ask OMB in your comment to withhold your personal identifying information from public review, we cannot guarantee that it will be done.

Dated: March 22, 2013.

Madonna L. Baucum,

Information Collection Clearance Officer, National Park Service.

[FR Doc. 2013–07137 Filed 3–27–13; 8:45 am]

BILLING CODE 4312–EH–P

INTERNATIONAL TRADE COMMISSION

[Investigation No. 337–TA–874]

Certain Products Having Laminated Packaging, Laminated Packaging, and Components Thereof; Institution of Investigation Pursuant to United States Code

AGENCY: U.S. International Trade Commission.

ACTION: Notice.

SUMMARY: Notice is hereby given that a complaint was filed with the U.S. International Trade Commission on February 20, 2013, under section 337 of the Tariff Act of 1930, as amended, 19 U.S.C. 1337, on behalf of Lamina Packaging Innovations LLC of Longview, Texas. An amended complaint was filed on March 12, 2013. The amended complaint alleges violations of section 337 based upon the importation into the United States, the sale for importation, and the sale within the United States after importation of certain products having laminated packaging, laminated packaging, and components thereof by reason of infringement of certain claims of U.S. Patent No. 6,207,242 (''the '242 patent'') and U.S. Patent No. 7,348,067 (''the '067 patent''). The amended complaint further alleges that an industry in the United States exists or is in the process of being established as required by subsection (a)(2) of section 337.

The complainant requests that the Commission institute an investigation and, after the investigation, issue an exclusion order and cease and desist orders.

ADDRESSES: The amended complaint, except for any confidential information contained therein, is available for inspection during official business hours (8:45 a.m. to 5:15 p.m.) in the Office of the Secretary, U.S. International Trade Commission, 500 E Street SW., Room 112, Washington, DC 20436, telephone (202) 205–2000. Hearing impaired individuals are advised that information on this matter can be obtained by contacting the Commission's TDD terminal on (202) 205–1810. Persons with mobility impairments who will need special assistance in gaining access to the

Commission should contact the Office of the Secretary at (202) 205–2000. General information concerning the Commission may also be obtained by accessing its internet server at *http://www.usitc.gov.* The public record for this investigation may be viewed on the Commission's electronic docket (EDIS) at *http://edis.usitc.gov.*

FOR FURTHER INFORMATION CONTACT: The Office of Unfair Import Investigations, U.S. International Trade Commission, telephone (202) 205–2560.

Authority: The authority for institution of this investigation is contained in section 337 of the Tariff Act of 1930, as amended, and in section 210.10 of the Commission's Rules of Practice and Procedure, 19 CFR 210.10 (2012).

Scope Of Investigation: Having considered the complaint, the U.S. International Trade Commission, on March 22, 2013, ORDERED THAT—

(1) Pursuant to subsection (b) of section 337 of the Tariff Act of 1930, as amended, an investigation be instituted to determine whether there is a violation of subsection (a)(1)(B) of section 337 in the importation into the United States, the sale for importation, or the sale within the United States after importation of certain products having laminated packaging, laminated packaging, and components thereof by reason of infringement of one or more of claims 1, 17, and 25 of the '242 patent and claims 1 and 19 of the '067 patent, and whether an industry in the United States exists or is in the process of being established as required by subsection (a)(2) of section 337;

(2) Notwithstanding any Commission Rules that would otherwise apply, the presiding Administrative Law Judge shall hold an early evidentiary hearing, find facts, and issue an early decision, as to whether the complainant has satisfied the economic prong of the domestic industry requirement. Any such decision shall be in the form of an initial determination (ID). Petitions for review of such an ID shall be due five calendar days after service of the ID; any replies shall be due three business days after service of a petition. The ID will become the Commission's final determination 30 days after the date of service of the ID unless the Commission determines to review the ID. Any such review will be conducted in accordance with Commission Rules 210.43, 210.44, and 210.45, 19 CFR 210.43, 210.44, and 210.45. The Commission expects the issuance of an early ID relating to the economic prong of the domestic industry requirement within 100 days of institution, except that the presiding ALJ may grant a limited extension of the ID for good cause shown. The issuance of an early ID finding that the economic prong of the domestic industry requirement is not satisfied shall stay the investigation unless the Commission orders otherwise; any other decision shall not stay the investigation or delay the issuance of a final ID covering the other issues of the investigation.

(3) For the purpose of the investigation so instituted, the following are hereby named as parties upon which this notice of investigation shall be served:

(a) The complainant is: Lamina Packaging Innovations LLC, 3301 W. Marshal Avenue, Suite 303, Longview, TX 75604.

(b) The respondents are the following entities alleged to be in violation of section 337, and are the parties upon which the complaint is to be served:

Remy Cointreau USA, Inc., 1290 Avenue of the Americas, 10th Floor, New York, NY 10104.

Pernod Ricard USA LLC, 250 Park Avenue, New York, NY 10177.

John Jameson Import Company, 100 Manhattanville Road, Purchase, NY 10577.

Moet Hennessy USA, 85 Tenth Avenue, New York, NY 10011.

Champagne Louis Roederer, 21 Boulevard Lundy, 51100 Reims, France.

Maisons Marques & Domaines USA Inc., 383 Fourth Street, Suite 400, Oakland, CA 94607.

Freixenet USA, 967 Broadway, Sonoma, CA 95476.

L'Oreal USA, Inc., 575 Fifth Avenue, New York, NY 10017.

Hasbro, Inc., 1027 Newport Avenue, Pawtucket, RI 02861.

Cognac Ferrand USA, Inc., 454 5th Avenue, Suite 640, New York, NY 10018.

WJ Deutsch & Son, 709 Westchester Avenue, Suite 300, White Plains, NY 10604.

Diageo North America, Inc., 801 Main Avenue, Norwalk, CT 06851.

Sidney Frank Importing Co., Inc., 20 Cedar Street, New Rochelle, NY 10801.

Beats Electronics LLC, 1601 Cloverfield Boulevard, Suite 5000N, Santa Monica, CA 90404.

Camus Wines & Spirits Group, 29 Rue Marguerite de Navarre, 16100 Cognac, France.

(c) The Office of Unfair Import Investigations, U.S. International Trade Commission, 500 E Street SW., Suite 401, Washington, DC 20436; and

(4) For the investigation so instituted, the Chief Administrative Law Judge, U.S. International Trade Commission, shall designate the presiding Administrative Law Judge.

Responses to the amended complaint and the notice of investigation must be submitted by the named respondents in accordance with section 210.13 of the Commission's Rules of Practice and Procedure, 19 CFR 210.13. Pursuant to 19 CFR 201.16(d)–(e) and 210.13(a), such responses will be considered by the Commission if received not later than 20 days after the date of service by the Commission of the amended complaint and the notice of investigation. Extensions of time for submitting responses to the amended complaint and the notice of investigation will not be granted unless good cause therefor is shown.

Failure of a respondent to file a timely response to each allegation in the amended complaint and in this notice may be deemed to constitute a waiver of the right to appear and contest the allegations of the amended complaint and this notice, and to authorize the administrative law judge and the Commission, without further notice to the respondent, to find the facts to be as alleged in the amended complaint and this notice and to enter an initial determination and a final determination containing such findings, and may result in the issuance of an exclusion order or a cease and desist order or both directed against the respondent.

Issued: March 22, 2013.

By order of the Commission.

Lisa R. Barton,

Acting Secretary to the Commission.

[FR Doc. 2013–07130 Filed 3–27–13; 8:45 am]

BILLING CODE 7020–02–P

JOINT BOARD FOR THE ENROLLMENT OF ACTUARIES

Meeting of the Advisory Committee; Meeting

AGENCY: Joint Board for the Enrollment of Actuaries.

ACTION: Notice of Federal Advisory Committee meeting.

SUMMARY: The Executive Director of the Joint Board for the Enrollment of Actuaries gives notice of a closed meeting of the Advisory Committee on Actuarial Examinations.

DATES: The meeting will be held on April 26, 2013, from 8:30 a.m. to 5:00 p.m.

ADDRESSES: The meeting will be held at The Segal Company, 333 W. 34th Street, New York, NY 10001.

FOR FURTHER INFORMATION CONTACT: Patrick W. McDonough, Executive Director of the Joint Board for the Enrollment of Actuaries, 202–622–8225.

SUPPLEMENTARY INFORMATION: Notice is hereby given that the Advisory Committee on Actuarial Examinations will meet at The Segal Company, 333 W. 34th Street, New York, NY, on April 26, 2013, from 8:30 a.m. to 5:00 p.m.

The purpose of the meeting is to discuss topics and questions that may be recommended for inclusion on future Joint Board examinations in actuarial mathematics, pension law and methodology referred to in 29 U.S.C. 1242(a)(1)(B).

A determination has been made as required by section 10(d) of the Federal Advisory Committee Act, 5 U.S.C. App., that the subject of the meeting falls within the exception to the open meeting requirement set forth in Title 5 U.S.C. 552b(c)(9)(B), and that the public interest requires that such meeting be closed to public participation.

Dated: March 21, 2013.

Patrick W. McDonough,

Executive Director, Joint Board for the Enrollment of Actuaries.

[FR Doc. 2013–07160 Filed 3–27–13; 8:45 am]

BILLING CODE 4830–01–P

DEPARTMENT OF JUSTICE

Antitrust Division

Notice Pursuant to the National Cooperative Research and Production Act of 1993—International Association of Plumbing and Mechanical Officials

Notice is hereby given that, on March 11, 2013, pursuant to Section 6(a) of the National Cooperative Research and Production Act of 1993, 15 U.S.C. 4301 *et seq.* (''the Act''), International Association of Plumbing and Mechanical Officials (''IAPMO'') has filed written notifications simultaneously with the Attorney General and the Federal Trade Commission disclosing additions or changes to its standards development activities. The notifications were filed for the purpose of extending the Act's provisions limiting the recovery of antitrust plaintiffs to actual damages under specified circumstances. Specifically, the nature and scope of IAPMO's standards development activities are to provide for the erection, installation, alteration, repair, relocation, replacement, addition to, use, or maintenance of solar energy, geothermal, and hydronic systems including but not limited to equipment and appliances intended for space heating or cooling; water heating; swimming pool heating or process heating; and snow and ice melt systems.

On September 14, 2004, IAPMO filed its original notification pursuant to Section 6(a) of the Act. The Department of Justice published a notice in the **Federal Register** pursuant to Section 6(b) of the Act on November 29, 2004 (69 FR 69396).

The last notification was filed with the Department on December 10, 2004. A notice was published in the **Federal Register** pursuant to Section 6(b) of the Act on February 2, 2005 (70 FR 5485).

Patricia A. Brink,

Director of Civil Enforcement, Antitrust Division.

[FR Doc. 2013–07134 Filed 3–27–13; 8:45 am]

BILLING CODE 4410–11–P

DEPARTMENT OF JUSTICE

Antitrust Division

Notice Pursuant To the National Cooperative Research and Production Act of 1993—Sematech, Inc. D/B/A International Sematech

Notice is hereby given that, on March 7, 2013, pursuant to Section 6(a) of the National Cooperative Research and Production Act of 1993, 15 U.S.C. 4301 *et seq.* (''the Act''), Sematech, Inc. d/b/a International Sematech (''SEMATECH'') has filed written notifications simultaneously with the Attorney General and the Federal Trade Commission disclosing changes in its membership. The notifications were filed for the purpose of extending the Act's provisions limiting the recovery of antitrust plaintiffs to actual damages under specified circumstances. Specifically, Poongsan, Seoul, REPUBLIC OF KOREA; Advantest, Tokyo, JAPAN; and Air Products, Allentown, PA, have been added as parties to this venture.

Also, Micron, Boise, ID, has withdrawn as a party to this venture.

No other changes have been made in either the membership or planned activity of the group research project. Membership in this group research project remains open, and SEMATECH intends to file additional written notifications disclosing all changes in membership.

On April 22, 1988, SEMATECH filed its original notification pursuant to Section 6(a) of the Act. The Department of Justice published a notice in the **Federal Register** pursuant to Section 6(b) of the Act on May 19, 1988 (53 FR 17987).

The last notification was filed with the Department on January 16, 2013. A notice was published in the **Federal Register** pursuant to Section 6(b) of the Act on February 12, 2013 (78 FR 9939).

Patricia A. Brink,

Director of Civil Enforcement, Antitrust Division.

[FR Doc. 2013–07136 Filed 3–27–13; 8:45 am]

BILLING CODE 4410–11–P

DEPARTMENT OF JUSTICE

Drug Enforcement Administration

[Docket No. 13–7]

Gary Alfred Shearer, M.D.; Decision And Order

On February 4, 2013, Administrative Law Judge (ALJ) Christopher B. McNeil issued the attached recommended decision. Neither party filed exceptions to the decision.

Having reviewed the record in its entirety, including the ALJ's recommended decision, I have decided to adopt the ALJ's rulings, findings of fact, conclusions of law,[1] and

[1] In opposing the Government's Motion for Summary Disposition, Respondent argues that the Kentucky Board of Medical Licensure's Order is based upon information provided by law enforcement which ''is seriously flawed, misconstrued, unverified, unsupported, or simply, untrue.'' Resp. Reply to Govt's Mot. for Summ. Disp., at 2. Respondent raises a plethora of contentions, including that the conduct of the investigators ''was highly prejudicial and, frankly, inept,'' *id.;* that the Board ''cherry-picked'' the charts its consultant reviewed and that the consultant's conclusion that Respondent ''violated the standard of care was wrong—because *there was no standard of care* in Kentucky regarding what a physician should do in the face of inconsistent [urine drug screens] at the time these patients were being treated,'' *id.* at 4; and that the Board ignored the consultant's recommendations that his prescribing issues could be addressed by educating [him] about proper follow up.'' *Id.* at 8. He then concludes by arguing that ''DEA created the case against [him] that led to his suspension[,]'' that ''[t]he agency now wants to bootstrap the suspension it caused as a reason to revoke [his] license to write controls'' [sic], and that the Board ''most likely would never have suspended [his] medical license without the DEA's biased, unfairly prejudicial input.'' *Id.* at 26–27. As relief, Respondent seeks a hearing and a stay of the matter until after the Board's hearing.

The fact remains that the Board's Order of Emergency Suspension remains in effect, and ''DEA has held repeatedly that a registrant cannot collaterally attack the result of a state criminal or administrative proceeding in a proceeding under section 304, 21 U.S.C. 824, of the CSA.'' *Zhiwei Lin,* 77 FR 18862, 18864 (2012) (citing cases). As I held in *Lin,* ''Respondent's various challenges to the validity of the [Board's] Suspension Order must be litigated in the forums provided by the State,'' and his ''contentions regarding the validity of the [Board's] Suspension Order are therefore not material to this Agency's resolution of whether he is entitled to maintain his DEA registration in''

Continued

recommended Order.[2]

Order

Pursuant to the authority vested in me by 21 U.S.C. 823(f) and 824(a), as well as 28 CFR 0.100(b), I order that DEA Certificate of Registration AS6213172, issued to Gary Alfred Shearer, M.D., be, and it hereby is, revoked. I further order that any pending application of Gary Alfred Shearer, M.D., to renew or modify his registration, be, and it hereby is, denied. This Order is effective immediately.[3]

Dated: March 21, 2013.

Michele M. Leonhart,

Administrator.

Anthony Yim, Esq., for the Government
Robert T. Core, Esq., for the Respondent

Recommended Ruling, Findings of Fact, Conclusions of Law, and Decision of the Administrative Law Judge

Procedural History

Christopher B. McNeil, Administrative Law Judge. On November 28, 2012, the Deputy Administrator of the Drug Enforcement Administration, Office of Diversion Control, filed an Order to Show Cause proposing to revoke the DEA Certificate of Registration, Number AS6213172, issued to Gary Alfred Shearer, M.D. (''Respondent''), pursuant to 21 U.S.C. 824(a)(3),(4) and 21 U.S.C. 823(f). As grounds for revocation, the Government alleges that Respondent is ''without authority to handle controlled substances in the State of Kentucky.'' [1]

On December 26, 2012, Respondent, through counsel, filed a timely request for hearing. Respondent does not dispute that his state license was suspended by the Kentucky Board of Medical Licensure. He argues, however, that the suspension was imposed ''without any due process hearing'' and ''is temporary in nature and is not permanent.'' [2]

On January 2, 2013, the Government was ordered to provide evidence to support the allegation that Respondent lacks state authority to handle controlled substances. Its Motion for Summary Disposition was received on January 8, 2013, with proof of service upon the Respondent. Accompanying the Motion was an affidavit by Stephanie Burkhart, dated January 3, 2013, and a photocopy of a document entitled ''Emergency Order of Suspension,'' appearing to be filed on September 24, 2012, with the Commonwealth of Kentucky Board of Medical Licensure. This Order states that the Board suspended the medical license it issued to the Respondent, Gary A. Shearer, M.D., effective upon the Respondent's receipt of the Order.

In my Order dated January 2, 2013, I provided to Respondent the opportunity to respond to the Government's Motion for Summary Disposition. I received that response on January 22, 2013. In his Reply to the Government's Motion for Summary Disposition, Respondent, through counsel, requests that I overrule the Government's motion, that a hearing be held prior to the disposition of this administrative charge, that these proceedings be held in abeyance until at least May 7, 2013, at which time Respondent anticipates presenting evidence to the Kentucky Medical Board, and that he be given an opportunity ''to prove that he has violated no law and adhered to the standards of care of his profession.'' [3]

Accompanying the Respondent's Reply was a compact disk, the contents of which were described within the Reply. Summarized, the contents include records that Respondent avers are relevant to his assertion that he has violated no law and has adhered to the standards of care of his profession. I have not read all of the pages contained on the disk. I have, however, examined portions of the 7,000 or so pages contained therein. Coupled with the factual and legal premises Respondent's counsel presented in his Reply, I believe I have a sufficient understanding of the contents of the disk to proceed. (For reasons set forth below, the disk has not been admitted as an exhibit, nor are its contents evidence in this proceeding. The disk remains in the record strictly as a proffer.)

Contained on the disk are medical records reflecting treatment provided by Respondent and other medical professionals. The records provide information about the treatment of patients whose circumstances were examined by the Kentucky Medical Board. In his Reply brief, Respondent states that the Motion for Summary Disposition now before me is based on the judgment of the Kentucky Medical Board, but that the Board's judgment was not predicated on evidence gathered during a Board hearing, and that in fact Respondent has not yet been permitted to present evidence to that Board. He stated he expects to make such a presentation during a due process hearing currently scheduled to take place before the Kentucky Medical Board on May 7, 8, and 9, 2013.[4]

Issue

The substantial issue raised by Respondent concerns this set of circumstances. Respondent correctly contends that the Government's Motion for Summary Disposition is based on the determination by the Kentucky Medical Board that his license to practice medicine in the Commonwealth should be suspended. He states that he currently is not practicing medicine and is not prescribing any controlled substances. He states that because of the temporary suspension of his license, his medical practice is now idled.[5]

Beyond his contention that the Medical Board's action has been taken without the opportunity to present evidence or respond to the same, Respondent makes a pointed claim regarding the role of the United States Department of Justice and the Drug Enforcement Administration. Respondent contends that the Medical Board's action is predicated wholly on action by investigators of the Drug Enforcement Administration, averring that ''the suspension was imposed by the Board because of information furnished to it by Diversion and Task Force Investigators of the DEA.'' [6] He then asserts that DEA Diversion personnel ''approached the [Medical Board] and loaded the [B]oard up with misinformation [].'' [7] He contends that ''much of the alleged information the DEA Diversion Investigators provided the [Medical Board] is seriously flawed, misconstrued, unverified, unsupported, or, simply, untrue.'' [8] According to Respondent, the evidence presented to the Medical Board ''was highly prejudicial and, frankly, inept.'' [9] The

Kentucky. *Id.* As explained by the ALJ, because Respondent no longer meets the CSA's threshold requirement for holding a practitioner's registration, *see* U.S.C. 802(21) and 823(f), he is not entitled to maintain his registration and I decline his request to stay the matter until the State concludes its proceeding.

[2] While the ALJ ''order[ed] that this case be forwarded to the Deputy Assistant Administrator for final disposition,'' Order Granting Govt's Motion for Summ. Disp., at 9; under Department of Justice regulations, that official has not been delegated the authority to issue ''final orders in connection with [the] suspension, denial or revocation of [a] registration.'' 28 CFR 0.104, Appendix to Subpart R of Part 0, § 7.

[3] Based on the findings set forth by the Kentucky Board of Medical Licensure in the Emergency Order of Suspension, I conclude that the public interest necessitates that this Order be effective immediately. *See* 21 CFR 1316.67.

[1] Order to Show Cause Nov. 28, 2012 at 1.

[2] Request for Hearing Dec. 26, 2012 at 1.

[3] Reply to the Government's Motion for Summary Disposition Jan. 22, 2013 at 1.

[4] *Id.*

[5] *Id.* at 1–2.

[6] *Id.* at 2.

[7] *Id.*

[8] *Id.*

[9] *Id.*

sum and substance of this feature of Respondent's Reply is that the Diversion investigators ''ought not be permitted to engineer a state licensure suspension, then bootstrap that questionable conduct into a DEA summary revocation.'' [10]

The Respondent's Contentions

There are thus two legal bases upon which Respondent relies in his argument against summary disposition. First, he challenges the propriety of the Kentucky Medical Board's decision to summarily suspend his medical license without first giving him the opportunity to confront evidence against him and introduce evidence in support of his own cause. Second, he challenges the propriety (and the fairness) of conditions that permit the DEA to force the revocation of his DEA Certificate without ever having the opportunity to present evidence in his own behalf and without the chance to challenge evidence that has been presented against him.

Missing from the otherwise thorough iteration of his premises is any reference to authority, legal or otherwise, that would permit me to enter into the weighing of the evidence Respondent has presented in this Reply. The scope and focus of the proceedings now before me are relatively concrete and highly circumscribed. They also are accurately set forth by the Government in its Motion for Summary Disposition, an analysis I am endorsing here.

Scope of Authority

The case before me is presented under a grant of authority to either suspend or revoke a registration ''upon a finding'' that a registrant ''has had his State license or registration suspended, revoked, or denied by competent State authority and is no longer authorized by State law to engage in the * * * dispensing of controlled substances.'' [11] My authority in this case arises because the DEA has jurisdiction over, and can register, ''practitioners.'' Federal statutory authority describes a ''practitioner'' as ''a physician * * * or other person licensed, registered, or otherwise permitted, by the United States or the jurisdiction in which he practices * * * to distribute, dispense, * * * [or] administer * * * a controlled substance in the course of professional practice * * *.'' [12] In addition, Congress provided that the Attorney General, through the DEA's Administrator, ''shall register practitioners * * * if the applicant is authorized to dispense * * * controlled substances under the laws of the State in which he practices.'' [13] These two provisions are internally consistent and are unambiguous. They also support the core premise set forth in the Government's Motion: that upon suspension or revocation of his medical license in Kentucky, Respondent no longer meets the statutory definition of a ''practitioner,'' which is a mandatory condition to continuing as a Registrant.[14] This construction of statutory authority has been endorsed and applied by the Administration and by courts on appeal.[15]

Facts

Given this body of law, the material fact here, indeed the sole fact of consequence, is whether the Kentucky Medical Board has suspended Respondent's medical license. Where, as here, no material fact is in dispute, there is no need for an evidentiary hearing and summary disposition is appropriate.[16] The sole question of fact before me can be addressed, and has been addressed, by stipulation. Our record includes a declaration under penalty of perjury [17] by Stephanie Burkhart.[18] Ms. Burkhart is the Lead Diversion Investigator associated with this case. In her declaration, Ms. Burkhart avers that the Kentucky Medical Board suspended Respondent's medical license on September 24, 2012.[19] She further states that this license is currently suspended, and that Respondent is not authorized to prescribe or dispense controlled substances in the Commonwealth.[20] (Although I note that, while the Government attributes Board action to that of the Florida Department of Health,[21] its citation to Appendix B establishes that such action was by the Board in Kentucky, not Florida.)

Also accompanying the Government's Motion is a photocopy of the Commonwealth's Emergency Order of Suspension issued by Board of Medical Licensure.[22] This document appears to confirm the factual contentions presented in D.I. Burkhart's Declaration, in that it declares it to be an Emergency Order and orders the suspension of Respondent's medical license, effective ''upon receipt by the licensee.'' [23] There is a certificate of service accompanying the Board's Order, indicating that a copy was sent by certified mail on September 24, 2012.

In order to establish the factual predicate necessary to determine this issue, I issued a procedural order dated January 23, 2013, directing the Respondent to indicate whether the following four facts are in dispute:

1. Respondent is registered with the Drug Enforcement Administration as a practitioner in Schedules II through V pursuant to DEA registration AS6213172, with a registered location of 7210 Turfway Road, Suite B, Florence, Kentucky 41042. This registration expires by its terms on February 28, 2015.
2. On September 24, 2012, the Kentucky Board of Medical Licensure, in case number 1433, issued an Emergency Order of Suspension, suspending the Respondent's license to practice medicine and prescribe controlled substances in Kentucky.
3. The Order of Suspension described above is admitted as ALJ Exhibit 1.
4. The Order of Suspension is currently in effect, and has been in effect continuously since the date Dr. Shearer received a copy of that Order.

On January 31, 2013, I received Respondent's Response to this procedural order, in which he stipulated to these four statements as being true. Also noted in the procedural order was the fact that the record did not establish when the Kentucky Board's Emergency Order of Suspension was received by Respondent. The evidence otherwise establishes that, indeed, Respondent has received the Board's Order, and receipt is deemed to have been effective as of September 28, 2012.

Analysis

In determining whether to grant the Government's motion for summary disposition, I am required to apply the principle of law that holds such a motion may be granted in an administrative proceeding if no material question of fact exists:

> It is settled law that when no fact question is involved or the facts are agreed, a plenary, adversary administrative proceeding involving evidence, cross-examination of witnesses, etc., is not obligatory—even though a pertinent statute prescribes a hearing. In such situations, the rationale is that Congress does not intend administrative agencies to perform meaningless tasks (citations omitted).[24]

[10] *Id.*

[11] 21 U.S.C. 824(a)(3).

[12] 21 U.S.C. 802(21).

[13] 21 U.S.C. 823(f).

[14] Government's Motion for Summary Disposition Jan. 8, 2013 at 4.

[15] *See Id.*

[16] *See Michael G. Dolin, M.D.,* 65 FR 5661 (2000); *see also Philip E. Kirk, M.D.,* 48 FR 32887 (1983), *aff'd sub nom. Kirk* v. *Mullen,* 749 F.2d 297 (6th Cir. 1984).

[17] *See* 28 U.S.C. 1746.

[18] Government's Motion for Summary Disposition Jan. 8, 2013 at Appendix A.

[19] *Id.* at 1.

[20] *Id.*

[21] *Id.* at 2.

[22] *Id.* at Appendix B.

[23] *Id.* at 13–14.

[24] *NLRB v. International Assoc. of Bridge,* 549 F.2d 634, 638 (9th Cir. 1977) (quoting *United States*

Continued

In this context, I am further guided by prior decisions before the DEA involving certificate holders whose state medical licenses have been revoked or suspended. On the issue of whether an evidentiary hearing is required, ''it is well settled that when there is no question of material fact involved, there is no need for a plenary, administrative hearing.'' [25] Under this guidance, the Government's motion must be sustained unless a material fact question has been presented.

The Government argues that the sole determinative fact now before me is that Respondent's medical license has been suspended by the Kentucky Medical Board. I agree. In order for a medical doctor to be authorized to administer controlled substances, he or she must meet the definition of ''practitioner'' as found in the Controlled Substances Act.[26] Such a person must be ''licensed, registered, or otherwise permitted by * * * the jurisdiction in which he practices * * * to distribute, dispense, [or] administer * * * a controlled substance in the course of professional practice.'' [27] Delegating to the Attorney General the authority to determine who may or may not be registered to perform these duties, Congress permitted such registration only ''if the applicant is authorized to dispense * * * controlled substances under the laws of the state in which he practices.'' [28]

These two sources of authority complement the provision that is triggered when a registrant loses his or her state license to practice: where, as here, a registrant ''has had his State license or registration suspended, revoked, or denied by competent State authority and is no longer authorized by State law to engage in the * * * dispensing of controlled substances,'' [29] the registrant is no longer entitled to registration by the DEA. As cited by the Government in its Motion for Summary Disposition, there is substantial authority both through agency precedent and through decisions of courts in review of that precedent, holding that a petitioner's DEA registration is dependent upon his or her license to practice medicine.[30] Under the doctrine before me, the Government meets its burden of establishing grounds to revoke a registration upon sufficient proof establishing the registrant's medical license has been suspended or revoked. That proof is in the record before me, and it warrants the summary revocation of Respondent's DEA certificate.

I am mindful of the arguments raised by Respondent in his Reply to the Government's Motion for Summary Disposition. At the outset, Respondent noted that he has not yet had an opportunity to present evidence to the Kentucky Medical Board, and urges that action by the DEA to revoke his registration wait until that process has run its course.[31] Emphasizing the temporary nature of the Medical Board's emergency order, Respondent asserts that the Board acted on the basis of evidence which, according to Respondent, is of questionable weight.[32] Beyond the concerns raised about not having been permitted to challenge this evidence and about the accuracy or sufficiency of the evidence, Respondent criticizes the DEA investigation and complains about its undue influence on the Medical Board, all occurring without benefit of a hearing.[33]

Some care should be taken to assure the parties that the actions taken in this administrative proceeding conform to constitutional requirements. Although he cites no authority in support of his claim, I have examined the parties' contentions with an eye towards ensuring all tenets of due process have been adhered to. There is, however, no authority for me to evaluate the facts that underlie Respondent's contentions. Those contentions are summarized in his Reply to the Government's Motion for Summary Disposition. These generally describe his meritorious service as a physician and the extenuating circumstances that may have led to adverse outcomes for some of his patients.[34] While the details of these circumstances may well be of interest to the Kentucky Medical Board, the facts or allegations presented in his Reply are not material in the administrative proceedings now before the DEA. In the proceedings now before me, the only material question is answered by the stipulation that establishes the suspension of Respondent's license. Further, and as is sufficiently set forth in the Government's Motion for Summary Disposition, revocation of the DEA certificate is warranted ''even where a practitioner's state authority has been summarily suspended and the State has yet to provide the practitioner with a hearing to challenge the State's action at which he may ultimately prevail.'' [35]

Conclusion, Order, and Recommendation

I find there is no genuine dispute regarding the action taken by the Kentucky Medical Board, and that because of that action the Respondent's medical license in Kentucky has been and remains suspended. I find no other material facts at issue, for the reasons set forth in the Government's Motion for Summary Disposition. Accordingly, I *grant* the Government's Motion for Summary Disposition.

Upon this finding, I *order* that this case be forwarded to the Deputy Assistant Administrator for final disposition. I *recommend* the Respondent's DEA Certificate of Registration, Number AS6213172, be revoked.

Dated: February 4, 2013.

Christopher B. Mcneil,

Administrative Law Judge.

[FR Doc. 2013–07194 Filed 3–27–13; 8:45 am]

BILLING CODE 4410–09–P

v. *Consolidated Mines & Smelting Co., Ltd.,* 455 F.2d 432, 453 (9th Cir. 1971)).

[25] *See Michael G. Dolin, M.D.,* 65 FR 5661 (2000); *Jesus R. Juarez, M.D.,* 62 FR 14945 (1997); *see also Philip E. Kirk, M.D.,* 48 FR 32887 (1983), *aff'd sub nom. Kirk* v. *Mullen,* 749 F.2d 297 (6th Cir. 1984).

[26] 21 U.S.C. 802(21).

[27] *Id.*

[28] 21 U.S.C. 823(f).

[29] 21 U.S.C. 824(a)(3).

[30] Government's Motion for Summary Disposition Jan. 8, 2013 at 4, and cases cited therein.

[31] Reply to the Government's Motion for Summary Disposition Jan. 22, 2013 at 1.

[32] *Id.* at 2.

[33] *Id.*

[34] *Id.* at 3–9 and 10–17.

[35] Government's Motion for Summary Disposition Jan. 8, 2013 at 4 (quoting *Kamal Tiwari, M.D.,* 76 FR 71604, 71606 (2011)).

DEPARTMENT OF JUSTICE

Drug Enforcement Administration

[Docket No. 13–13]

Pawan Kumar Jain, M.D.; Decision And Order

On February 12, 2013, Administrative Law Judge (ALJ) Gail A. Randall issued the attached recommended decision. Neither party filed exceptions to the decision. Having reviewed the entire record, I have decided to adopt the ALJ's rulings, findings of fact, conclusions of law, and recommended Order.

Order

Pursuant to the authority vested in me by 21 U.S.C. 823(f) and 824(a), as well as 28 CFR 0.100(b), I order that DEA Certificate of Registration BJ5128067, issued to Pawan Kumar Jain, M.D., be, and it hereby is, revoked. I further order that any pending application of Pawan Kumar Jain, M.D., to renew or modify his registration, be, and it hereby is, denied. This Order is effective immediately.

Dated: March 21, 2013.

Michele M. Leonhart,

Administrator.

Dedra S. Curteman, Esq., for the Government

Jeffrey C. Grass, Esq., for the Respondent

Recommended Rulings, Findings of Fact, Conclusions of Law, and Decision of the Administrative Law Judge

I. Facts

Gail A. Randall, Administrative Law Judge. The Deputy Assistant Administrator, Drug Enforcement Administration (''DEA'' or ''Government''), issued an Order to Show Cause (''Order'') dated December 13, 2012,[1] proposing to revoke the DEA Certificate of Registration, Number BJ5128067, of Pawan Kumar Jain, M.D., (''Dr. Jain'' or ''Respondent''), as a practitioner, pursuant to 21 U.S.C. 824(a)(3)–(4) (2006), and deny any pending applications for renewal or modification of such registration because the Respondent does ''not have authority to practice medicine or handle controlled substances in the State of New Mexico'' and Respondent's ''continued registration is inconsistent with the public interest.'' [Order at 1].

Specifically, the Order alleged that the New Mexico State Medical Board took action against the Respondent on June 28, 2012. [*Id.*]. The Order further alleged that as a result of the action by the New Mexico State Medical Board, the Respondent is without authority to handle controlled substances in the state of New Mexico, the state in which the Respondent is registered with the DEA. [*Id.*] Thus, the DEA must revoke Respondent's DEA registration based on his lack of authority to handle controlled substances in the state of New Mexico. [*Id.*]. Additionally, the Order alleged that on April 3, 2012, during the execution of a federal search warrant, DEA personnel located controlled substances and prescription bottles at the Respondent's premises after the Respondent had previously stated on February 22, 2012, that he ''did not order controlled substances for dispensing or administering at [his] registered location'' nor did he maintain controlled substances on his premises. [*Id.* at 1–2]. In relation to this allegation, the Order asserted that the Respondent did not maintain an inventory log for the controlled substances located at his registered location and thus, he violated 21 CFR 1304.11(a). Lastly, the Order alleged that from June 2008 through September 2011 at least twenty-one of the Respondent's patients died as a result of 'multiple drug toxicity.' [*Id.* at 2]. Moreover, the Order alleged that a medical expert reviewed ten of the Respondent's patient records, seven of which were deceased patients, and determined that the Respondent's care deviated from the standard of care, and in some cases resulted in the death of the Respondent's patients. [*Id.*]. In relation to this allegation, the Order stated that the Respondent provided strong and dangerous controlled substances to patients who posed a risk of diversion, the Respondent post-dated prescriptions, the Respondent failed to properly complete prescriptions, and the Respondent did not issue prescriptions for a legitimate medical purpose in the usual course of professional practice. [*Id.*].

On January 16, 2013, the Respondent, through counsel, filed a request for a hearing in the above-captioned matter. Concurrently with his request for hearing, Respondent filed a Motion for Stay of the Order to Show Cause Hearing (''Respondent's Motion''). Therein, Respondent moved to stay the scheduled hearing in this matter pending the resolution of Respondent's ''Petition for Judicial Review of the New Mexico State Medical Board's revocation of his medical license.'' [Respondent's Motion at 1]. Respondent argued that a stay of the administrative hearing will not harm the public interest because Dr. Jain is currently unable to handle controlled substances. [*Id.*].

On January 22, 2013, the Court issued an Order directing the Government to respond to Respondent's Request for Hearing and Motion for Stay of the Hearing on or before January 29, 2013.

On January 28, 2013, the Government filed its Motion for Summary Disposition and Response to Respondent's Request for Hearing and Motion for Stay of the Hearing (Government's Motion'').[2] Therein, the Government opposed the Respondent's Motion for Stay of the Hearing and moved this Court to summarily dismiss the above-captioned matter. [Government's Motion at 1].

The Government argued that summary disposition is warranted in this case because the Respondent currently lacks authority to handle controlled substances in the State of New Mexico and thus lacks authority to possess a DEA registration. [*Id.* at 2–3]. The Government attached to its motion, a Decision and Order from the New Mexico Medical Board, dated December 17, 2012, in which the New Mexico Medical Board revoked the Respondent's medical license.[3] [*Id.* at Exhibit C]. The Government argues, therefore, that in accordance with Agency precedent, the DEA is barred by statute from continuing the Respondent's registration because his state medical license has been revoked. [*Id.* at 2–3]. In addition, the Government argues that summary disposition is appropriate even though the Respondent intends to contest the New Mexico Board's decision to revoke his authority to practice medicine or handle controlled substances in the state of New Mexico. [*Id.* at 3–5]. The Government argues that summary disposition is warranted, even though the Respondent's privileges may be reinstated at a later date, because Agency precedent allows for the revocation of a registrant's registration when a state license has been suspended. [*Id.*]. Therefore, the Government requested that this Court grant its Motion for Summary Disposition and recommend that the Respondent's DEA registration be revoked because the Respondent lacks state authority to handle controlled substances. [*Id.* at 5]. In addition, the Government requested that this Court deny Respondent's Motion for Stay of the Hearing. [*Id.*].

On January 29, 2013, the Court issued an Order directing the Respondent to respond to Government's Motion for Summary Disposition on or before February 5, 2013. The Respondent failed to respond to the Government's Motion for Summary Disposition by the Court's set date of February 5, 2013.

For the reasons set forth below, I will grant the Government's Motion and recommend that the Administrator revoke the Respondent's DEA Certificate of Registration. But, I note that, pursuant to 21 CFR1301.13(a) (2012), the Respondent may apply for a new DEA Certificate of Registration at any time.

I will also deny the Respondent's Motion for a Stay.

[1] The Order to Show Cause was served on the Respondent on December 17, 2012. *See* Government's Notice of Service.

[2] Government concurrently filed its Notice of Service, which stated that the December 13, 2012 Order to Show Cause was served on Respondent on December 17, 2012 by DEA investigators. *See* Government's Notice of Service. Thus, the Respondent's January 16, 2013 Request for Hearing was timely filed. *See* 21 CFR 1301.43(a) (2012).

[3] In addition, the Government provided a June 28, 2012 Summary Suspension Order of the Respondent's New Mexico license to practice as a ''physician assistant'' [*sic*] from the New Mexico Medical Board, *see* Government Motion at Exh. A, a July 6, 2012 Amended Summary Suspension Order of the Respondent's New Mexico license to practice as a physician from the New Mexico Medical Board, *see* Government Motion at Exh. B, and a November 5, 2012 Hearing Officers Report from the New Mexico Medical Board, *see* Government Motion at Exh. D.

II. Discussion

A. Respondent Currently Lacks Authority To Handle Controlled Substances In New Mexico

The DEA will not maintain a controlled substances registration if the registrant is without state authority to handle controlled substances in the state in which the registrant practices. The Controlled Substances Act (''CSA'') provides that obtaining a DEA registration is conditional on holding a state license to handle controlled substances. *See* 21 U.S.C. 802(21) (2006) (defining ''practitioner'' as ''a physician * * * licensed, registered, or otherwise permitted, by * * * the jurisdiction in which he practices * * * to distribute, dispense, [or] administer * * * a controlled substance in the course of professional practice''); 21 U.S.C. 823(f) (2006) (''the Attorney General shall register practitioners * * * if the applicant is authorized to dispense * * * controlled substances under the laws of the State in which he practices''). The DEA, therefore, has consistently held that the CSA requires the DEA to revoke the registration of a practitioner who no longer possesses a state license to handle controlled substances. *See* 21 U.S.C. 824(a)(3) (2006) (stating ''a registration may be suspended or revoked by the Attorney General upon a finding that the registrant has had his State license or registration suspended, revoked or denied by competent State authority''); *Beverley P. Edwards, M.D.,* 75 FR 49,991 (DEA 2010); *Joseph Baumstarck, M.D.,* 74 FR 17,525 (DEA 2009).

In this case, the Government has provided adequate documentation that the Respondent's New Mexico medical license was suspended on July 6, 2012, and further revoked on December 17, 2012. *See* Government's Motion at Exh. B and C. Furthermore, although the Respondent failed to file a response to the Government's Motion for Summary Disposition, the Respondent admitted in his January 16, 2013 Request for Hearing that ''Dr. Jain does not have authority to practice medicine or handle controlled substances in the State of New Mexico.'' [Respondent's Request for Hearing at 1]. Although the Respondent is seeking review of the New Mexico Medical Board's decision to revoke his medical license,[4] this is not a sufficient reason to stay these proceedings. The law is clear that when the Respondent is without state authority to practice medicine, his DEA registration must be revoked. *See* 21 U.S.C. 824(a)(3); *Edwards,* 75 FR 49,991; *Baumstarck,* 74 FR 17,525.

Although it is not disputed that the Respondent currently lacks state authority to practice medicine and handle controlled substances, the Respondent contends that his continued DEA registration is within the public interest. *See* Respondent's Request for Hearing at 2–4. Respondent argues that even though his state medical license has been revoked, a decision which he is appealing, he is entitled to a hearing in this matter because there are ''genuine issues of material fact'' that will be introduced through expert testimony, records, and other documents that demonstrate ''that given the totality of the facts and circumstances in the record, revoking his DEA COR registration would not be appropriate or justified.'' [*Id.* at 3]. Additionally, the Respondent contends that he has over 40 years of experience in the medical field and ''has never been the subject of any allegations that his medical practice is inconsistent with the public interest.'' [*Id.*]. The Respondent also asserts that he has no conviction record and has always complied with federal and state laws relating to controlled substances. [*Id.* at 3–4]. Lastly, the Respondent asserts that the allegations in the Order to Show Cause are ''in dispute and not accurate.'' [*Id.* at 4]. Moreover, the Respondent argues that his expert witness will be able to prove that the Respondent's practices were for a legitimate medical purpose and ''within acceptable limits of the recognized standard of care in the field of pain management.'' [*Id.*].

While the Respondent may have raised genuine disputes of fact concerning the allegations in the Government's Order to Show Cause, those disputes are immaterial in light of the Respondent's current lack of state registration. Indeed, the CSA and Agency precedent make clear that as a prerequisite to DEA registration the Respondent must have state authority to handle controlled substances, and that without such authority all other issues before this forum are moot. *See* 21 U.S.C. 802(21); 21 U.S.C. 823(f); *Joseph Baumstarck, M.D.,* 74 FR at 17,527 (DEA 2009). Thus, because there is no dispute that the Respondent lacks state authority to practice medicine and handle controlled substances, the Respondent's registration must be revoked.

Moreover, because there is no genuine dispute as to any material fact and substantial evidence shows that Respondent is presently without state authority to practice medicine and handle controlled substances in New Mexico, summary disposition is warranted. It is well settled that when there is no question of material fact involved, there is no need for a plenary administrative hearing and that summary disposition is appropriate. *See Layfe Robert Anthony, M.D.,* 67 FR 35,582 (DEA 2002); *Michael G. Dolin, M.D.,* 65 FR 5,661 (DEA 2000); *Jesus R. Juarez, M.D.,* 62 FR 14,945 (DEA 1997). Accordingly, both the plain language of the CSA and Agency interpretive precedent dictate that summary disposition is appropriate and the Respondent's DEA registration must be revoked because Respondent is without state authority to practice medicine and handle controlled substances.

B. Respondent Is Entitled To Reapply for Registration With the DEA

Any person who is required to register with the DEA may apply for registration at any time. 21 CFR 1301.13(a) (2012) (''Any person who is required and who is not registered may apply for registration at any time. No person required to be registered shall engage in any activity for which registration is required until the application for registration is granted and a Certificate of Registration is issued by the Administrator to such person'').

The Respondent is permitted to reapply for a Certificate of Registration with the DEA at any time in the future. 21 CFR 1301.13(a). However, the Respondent will not be permitted to engage in activity for which a registration is required until his application is granted by the DEA. *Id.*

III. Conclusion, Order, and Recommendation

Consequently, there is no genuine dispute of material fact regarding the Respondent's lack of state authority to practice medicine and handle controlled substances. Thus, summary disposition for the Government is appropriate. It is well settled that when there is no question of material fact involved, there is no need for a plenary, administrative hearing. *See Dolin,* 65 FR 5,661. Here, there is no genuine dispute that the Respondent currently lacks state authority to practice medicine and to handle controlled substances in New Mexico.

Accordingly, I hereby

Deny the Respondent's Motion for a Stay; further I

Grant the Government's Motion for Summary Disposition.

I also forward this case to the Deputy Administrator for final disposition. I

[4] In Respondent's January 16, 2012 Request for Hearing, he contends that he has a pending request before the New Mexico Medical Board to reopen his case and that this request ''will be heard and ruled on by the Board within 60 days of the date of this letter.'' [Respondent's Request for Hearing at 2].

recommend that the Respondent's DEA Certificate of Registration, Number BJ5128067, be revoked.[5]

Dated: February 12, 2013.

Gail A. Randall,

Administrative Law Judge.

[FR Doc. 2013–07195 Filed 3–27–13; 8:45 am]

BILLING CODE 4410–09–P

[5] The sole basis of my recommendation is the loss of Respondent's state licensure. I make no findings or conclusions concerning the other allegations asserted in the Order to Show Cause.

DEPARTMENT OF JUSTICE

Drug Enforcement Administration

Importer of Controlled Substances; Notice of Application; Stepan Company

This is notice that on February 6, 2013, Stepan Company, Natural Products Department, 100 W. Hunter Avenue, Maywood, New Jersey 07607, made application by renewal to the Drug Enforcement Administration (DEA) for registration as an importer of Coca Leaves (9040), a basic class of controlled substance listed in schedule II.

The company plans to import the listed controlled substance to manufacture bulk controlled substance for distribution to its customer.

Comments and requests for hearings on applications to import narcotic raw material are not appropriate. 72 FR 3417 (2007).

As noted in a previous notice published in the **Federal Register** on September 23, 1975, 40 FR 43745, all applicants for registration to import a basic class of any controlled substance in schedules I or II are, and will continue to be, required to demonstrate to the Deputy Assistant Administrator, Office of Diversion Control, Drug Enforcement Administration, that the requirements for such registration pursuant to 21 U.S.C. 958(a); 21 U.S.C. 823(a); and 21 CFR 1301.34(b), (c), (d), (e), and (f) are satisfied.

Dated: March 19, 2013.

Joseph T. Rannazzisi,

Deputy Assistant Administrator, Office of Diversion Control, Drug Enforcement Administration.

[FR Doc. 2013–07147 Filed 3–27–13; 8:45 am]

BILLING CODE 4410–09–P

DEPARTMENT OF JUSTICE

Drug Enforcement Administration

Importer of Controlled Substances; Notice of Application; SA INTL GMBH C/O., Sigma Aldrich Co. LLC

Pursuant to Title 21 Code of Federal Regulations 1301.34 (a), this is notice that on February 1, 2013, SA INTL GMBH C/O., Sigma Aldrich Co. LLC., 3500 Dekalb Street, St. Louis, Missouri 63118, made application by renewal to the Drug Enforcement Administration (DEA) for registration as an importer of the following basic classes of controlled substances:

Drug	Schedule
Cathinone (1235)	I
Methcathinone (1237)	I
N-Ethylamphetamine (1475)	I
Aminorex (1585)	I
Gamma Hydroxybutyric Acid (2010).	I
Methaqualone (2565)	I
Alpha-ethyltryptamine (7249)	I
Ibogaine (7260)	I
Lysergic acid diethylamide (7315)	I
Marihuana (7360)	I
Tetrahydrocannabinols (7370)	I
Mescaline (7381)	I
4-Bromo-2,5-dimethoxyamphetamine (7391).	I
4-Bromo-2,5-dimethoxyphenethylamine (7392).	I
4-Methyl-2,5-dimethoxyamphetamine (7395).	I
2,5-Dimethoxyamphetamine (7396).	I
3,4-Methylenedioxyamphetamine (7400).	I
N-Hydroxy-3,4-methylenedioxyamphetamine (7402).	I
3,4-Methylenedioxy-N-ethylamphetamine (7404).	I
3,4-Methylenedioxymethamphetamine (MDMA) (7405).	I
4-Methoxyamphetamine (7411)	I
Bufotenine (7433)	I
Diethyltryptamine (7434)	I
Dimethyltryptamine (7435)	I
Psilocybin (7437)	I
Psilocyn (7438)	I
1-[1-(2-Thienyl)cyclohexyl]piperidine (7470).	I
N-Benzylpiperazine (7493)	I
Heroin (9200)	I
Normorphine (9313)	I
Etonitazene (9624)	I
Amphetamine (1100)	II
Methamphetamine (1105)	II
Methylphenidate (1724)	II
Amobarbital (2125)	II
Pentobarbital (2270)	II
Secobarbital (2315)	II
Glutethimide (2550)	II
Nabilone (7379)	II
Phencyclidine (7471)	II
Cocaine (9041)	II
Codeine (9050)	II
Oxycodone (9143)	II
Hydromorphone (9150)	II
Diphenoxylate (9170)	II
Ecgonine (9180)	II
Ethylmorphine (9190)	II
Hydrocodone (9193)	II
Levorphanol (9220)	II
Meperidine (9230)	II
Methadone (9250)	II
Morphine (9300)	II
Thebaine (9333)	II
Opium, powdered (9639)	II
Levo-alphacetylmethadol (9648)	II
Oxymorphone (9652)	II
Fentanyl (9801)	II

The company plans to import the listed controlled substances for sale to research facilities for drug testing and analysis.

In reference to drug codes 7360 and 7370, the company plans to import a synthetic cannabidiol and a synthetic Tetrahydrocannabinol. No other activity for this drug code is authorized for this registration.

Comments and requests for hearings on applications to import narcotic raw material are not appropriate. 72 FR 3417(2007).

In regard to the non-narcotic raw material, any bulk manufacturer who is presently, or is applying to be, registered with DEA to manufacture such basic classes of controlled substances listed in schedules I or II, which fall under the authority of section 1002(a)(2)(B) of the Act (21 U.S.C. 952(a)(2)(B)) may, in the circumstances set forth in 21 U.S.C. 958(i), file comments or objections to the issuance of the proposed registration and may, at the same time, file a written request for a hearing on such application pursuant to 21 CFR 1301.43 and in such form as prescribed by 21 CFR 1316.47.

Any such written comments or objections should be addressed, in quintuplicate, to the Drug Enforcement Administration, Office of Diversion Control, **Federal Register** Representative (ODL), 8701 Morrissette Drive, Springfield, Virginia 22152; and must be filed no later than April 29, 2013.

This procedure is to be conducted simultaneously with, and independent of, the procedures described in 21 CFR 1301.34(b), (c), (d), (e), and (f). As noted in a previous notice published in the Federal Register on September 23, 1975, 40 FR 43745–46, all applicants for registration to import basic classes of any controlled substance in schedules I or II are, and will continue to be, required to demonstrate to the Deputy Assistant Administrator, Office of

Diversion Control, Drug Enforcement Administration, that the requirements for such registration pursuant to 21 U.S.C. 958(a); 21 U.S.C. 823(a); and 21 CFR 1301.34(b), (c), (d), (e), and (f) are satisfied.

Dated: March 20, 2013.

Joseph T. Rannazzisi,

Deputy Assistant Administrator, Office of Diversion Control, Drug Enforcement Administration.

[FR Doc. 2013–07152 Filed 3–27–13; 8:45 am]

BILLING CODE 4410–09–P

DEPARTMENT OF JUSTICE

Drug Enforcement Administration

Importer of Controlled Substances; Notice of Registration; Johnson Matthey, Inc.

By Notice dated November 19, 2012, and published in the **Federal Register** on November 27, 2012, 77 FR 70824, Johnson Matthey, Inc., Pharmaceutical Materials, 2003 Nolte Drive, West Deptford, New Jersey 08066–1742, made application by renewal to the Drug Enforcement Administration (DEA) to be registered as an importer of the following basic classes of controlled substances:

Drug	Schedule
Coca Leaves (9040)	II
Thebaine (9333)	II
Opium, raw (9600)	II
Noroxymorphone (9668)	II
Poppy Straw Concentrate (9670)	II

The company plans to import the listed controlled substances as raw materials, to be used in the manufacture of bulk controlled substances, for distribution to its customers.

No comments or objections have been received. DEA has considered the factors in 21 U.S.C. 823(a) and 952(a), and determined that the registration of Johnson Matthey, Inc., to import the basic classes of controlled substances is consistent with the public interest, and with United States obligations under international treaties, conventions, or protocols in effect on May 1, 1971, at this time. DEA has investigated Johnson Matthey, Inc., to ensure that the company's registration is consistent with the public interest. The investigation has included inspection and testing of the company's physical security systems, verification of the company's compliance with state and local laws, and a review of the company's background and history. Therefore, pursuant to 21 U.S.C. 952(a) and 958(a), and in accordance with 21 CFR § 1301.34, the above named company is granted registration as an importer of the basic classes of controlled substances listed.

Dated: March 20, 2013.

Joseph T. Rannazzisi,

Deputy Assistant Administrator, Office of Diversion Control, Drug Enforcement Administration.

[FR Doc. 2013–07150 Filed 3–27–13; 8:45 am]

BILLING CODE 4410–09–P

DEPARTMENT OF JUSTICE

Drug Enforcement Administration

Importer of Controlled Substances; Notice of Registration; Mylan Pharmaceuticals, Inc.

By Notice dated November 27, 2012, and published in the **Federal Register** on December 5, 2012, 77 FR 72409, Mylan Pharmaceuticals, Inc., 781 Chestnut Ridge Road, Morgantown, West Virginia 26505, made application by renewal to the Drug Enforcement Administration (DEA) to be registered as an importer of the following basic classes of controlled substances:

Drug	Schedule
Amphetamine (1100)	II
Methylphenidate (1724)	II
Oxycodone (9143)	II
Hydromorphone (9150)	II
Methadone (9250)	II
Morphine (9300)	II
Fentanyl (9801)	II

The company plans to import the listed controlled substances in finished dosage form (FDF) from foreign sources for analytical testing and clinical trials in which the foreign FDF will be compared to the company's own domestically-manufactured FDF. This analysis is required to allow the company to export domestically-manufactured FDF to foreign markets.

No comments or objections have been received. DEA has considered the factors in 21 U.S.C. 823(a) and 952(a), and determined that the registration of Mylan Pharmaceuticals, Inc. to import the basic classes of controlled substances is consistent with the public interest, and with United States obligations under international treaties, conventions, or protocols in effect on May 1, 1971. DEA has investigated Mylan Pharmaceuticals, Inc. to ensure that the company's registration is consistent with the public interest. The investigation has included inspection and testing of the company's physical security systems, verification of the company's compliance with state and local laws, and a review of the company's background and history.

Therefore, pursuant to 21 U.S.C. 952(a) and 958(a), and in accordance with 21 CFR 1301.34, the above named company is granted registration as an importer of the basic classes of controlled substances listed.

Dated: March 20, 2013.

Joseph T. Rannazzisi,

Deputy Assistant Administrator, Office of Diversion Control, Drug Enforcement Administration.

[FR Doc. 2013–07143 Filed 3–27–13; 8:45 am]

BILLING CODE 4410–09–P

DEPARTMENT OF JUSTICE

Drug Enforcement Administration

Manufacturer of Controlled Substances; Notice of Application; Patheon Pharmaceuticals, Inc.

Pursuant to § 1301.33(a), Title 21 of the Code of Federal Regulations (CFR), this is notice that on February 22, 2013, Patheon Pharmaceuticals, Inc., 2110 E. Galbraith Road, Cincinnati, Ohio 45237, made application by renewal to the Drug Enforcement Administration (DEA) to be registered as a bulk manufacturer of Gamma Hydroxybutyric Acid (2010), a basic class of controlled substance listed in schedule I.

The company plans to manufacture the listed controlled substance for distribution to its customers.

Any other such applicant, and any person who is presently registered with DEA to manufacture such substance, may file comments or objections to the issuance of the proposed registration pursuant to 21 CFR 1301.33(a).

Any such written comments or objections should be addressed, in quintuplicate, to the Drug Enforcement Administration, Office of Diversion Control, Federal Register Representative (ODL), 8701 Morrissette Drive, Springfield, Virginia 22152; and must be filed no later than May 28, 2013.

Dated: March 20, 2013.

Joseph T. Rannazzisi,

Deputy Assistant Administrator, Office of Diversion Control, Drug Enforcement Administration.

[FR Doc. 2013–07138 Filed 3–27–13; 8:45 am]

BILLING CODE 4410–09–P

DEPARTMENT OF JUSTICE

Drug Enforcement Administration

Manufacturer of Controlled Substances; Notice of Application; Johnson Matthey Pharmaceutical Materials, Inc.

Pursuant to § 1301.33(a), Title 21 of the Code of Federal Regulations (CFR), this is notice that on November 15, 2012, Johnson Matthey Pharmaceutical Materials, Inc., Pharmaceutical Service, 25 Patton Road, Devens, Massachusetts 01434, made application by renewal to the Drug Enforcement Administration (DEA) to be registered as a bulk manufacturer of the following basic classes of controlled substances:

Drug	Schedule
Amphetamine (1100)	II
Methylphenidate (1724)	II
Nabilone (7379)	II
Hydrocodone (9193)	II
Alfentanil (9737)	II
Remifentanil (9739)	II
Sufentanil (9740)	II

The company plans to utilize this facility to manufacture small quantities of the listed controlled substances in bulk and to conduct analytical testing in support of the company's primary manufacturing facility in West Deptford, New Jersey. The controlled substances manufactured in bulk at this facility will be distributed to the company's customers.

Any other such applicant, and any person who is presently registered with DEA to manufacture such substances, may file comments or objections to the issuance of the proposed registration pursuant to 21 CFR 1301.33(a).

Any such written comments or objections should be addressed, in quintuplicate, to the Drug Enforcement Administration, Office of Diversion Control, Federal Register Representative (ODL), 8701 Morrissette Drive, Springfield, Virginia 22152; and must be filed no later than May 28, 2013.

Dated: March 20, 2013.

Joseph T. Rannazzisi,

Deputy Assistant Administrator, Office of Diversion Control, Drug Enforcement Administration.

[FR Doc. 2013–07140 Filed 3–27–13; 8:45 am]

BILLING CODE 4410–09–P

DEPARTMENT OF JUSTICE

Drug Enforcement Administration

Manufacturer of Controlled Substances; Notice of Registration; Siemens Healthcare Diagnostics, Inc.

By Notice dated November 27, 2012, and published in the **Federal Register** on December 5, 2012, 77 FR 72409, Siemens Healthcare Diagnostics Inc., Attn: RA, 100 GBC Drive, Mail Stop 514, Newark, Delaware 19702, made application by renewal to the Drug Enforcement Administration (DEA) to be registered as a bulk manufacturer of the following basic classes of controlled substances:

Drug	Schedule
Tetrahydrocannabinols (7370)	I
Ecgonine (9180)	II
Morphine (9300)	II

The company plans to produce the listed controlled substances in bulk to be used in the manufacture of reagents and drug calibrator controls which are DEA exempt products.

No comments or objections have been received. DEA has considered the factors in 21 U.S.C. 823(a) and determined that the registration of Siemens Healthcare Diagnostics Inc., to manufacture the listed basic classes of controlled substances is consistent with the public interest at this time. DEA has investigated Siemens Healthcare Diagnostics Inc., to ensure that the company's registration is consistent with the public interest. The investigation has included inspection and testing of the company's physical security systems, verification of the company's compliance with state and local laws, and a review of the company's background and history. Therefore, pursuant to 21 U.S.C. 823(a), and in accordance with 21 CFR 1301.33, the above named company is granted registration as a bulk manufacturer of the basic classes of controlled substances listed.

Dated: March 20, 2013.

Joseph T. Rannazzisi,

Deputy Assistant Administrator, Office of Diversion Control, Drug Enforcement Administration.

[FR Doc. 2013–07141 Filed 3–27–13; 8:45 am]

BILLING CODE 4410–09–P

DEPARTMENT OF LABOR

Office of the Secretary

Agency Information Collection Activities; Submission for OMB Review; Comment Request; Annual Funding Notice for Defined Benefit Pension Plans

ACTION: Notice.

SUMMARY: The Department of Labor (DOL) has submitted the Employee Benefits Security Administration (EBSA) sponsored information collection request (ICR) revision titled, ''Annual Funding Notice for Defined Benefit Pension Plans,'' to the Office of Management and Budget (OMB) for review and approval utilizing emergency review procedures, in accordance with the Paperwork Reduction Act of 1995, Public Law 104–13, 44 U.S.C. chapter 35 (PRA) and 5 CFR 1320.13.

DATES: OMB approval of the revised ICR has been requested by April 29, 2013. Submit comments on or before April 26, 2013.

ADDRESSES: A copy of this ICR, with applicable supporting documentation; including a description of the likely respondents, proposed frequency of response, and estimated total burden may be obtained from the RegInfo.gov Web site, *http://www.reginfo.gov/public/do/PRAMain*, or by contacting G. Christopher Cosby at, Department of Labor-EBSA, Room N–5718, 200 Constitution Avenue NW., Washington, DC 20210, telephone, (202) 693–8410; FAX, (202) 219–4745 (these are not toll-free numbers); email, *cosby.chris@dol.gov.*

Submit comments about this request to the Office of Information and Regulatory Affairs, Attn: OMB Desk Officer for the Department of Labor-EBSA, Office of Management and Budget, Room 10235, 725 17th Street NW., Washington, DC 20503, Fax: 202–395–6881 (these are not toll-free numbers), email: *OIRA_submission@omb.eop.gov*; and G. Christopher Cosby Department of Labor-EBSA, Room N–5718, 200 Constitution Avenue NW., Washington, DC 20210, telephone, (202) 693–8410; FAX, (202) 219–4745 (these are not toll-free numbers); email, *cosby.chris@dol.gov.*

SUPPLEMENTARY INFORMATION: On July 6, 2012, President Barrack Obama signed the Moving Ahead for Progress in the 21st Century Act (MAP–21). The new law provides funding interest-rate stabilization for single employer defined benefit (DB) plans, effective for plan years beginning on and after January 1,

2012. To counter the current low interest rates that are triggering significantly larger pension contributions for many plan sponsors, the MAP–21 sets a floor (or ceiling) for the interest rates that single employer DB plan administrators generally are required to use to calculate contributions. Under the new rules, the generally required interest rates are limited to rates that are within a specified range, or corridor, above or below a 25-year average for the rates.

Employee Retirement Income Security Act of 1974 (ERISA) section 101(f) sets forth the requirements for plan administrators of most single-employer DB plans to furnish annual funding notices to the PBGC, plan participants and beneficiaries, and each labor organization representing such participants or beneficiaries. MAP–21 section 40211(b)(2)(A) has amended ERISA section 101(f)(2), by adding a new subparagraph (D), to require single-employer DB plan administrators to disclose additional information in the annual funding notice for a plan year beginning after December 31, 2011, and before January 1, 2015, regarding the effect of the MAP–21 segment rate stabilization rules on plan liabilities and the plan sponsor's minimum required contributions to the plan. MAP–21 section 40211(b)(2)(B) requires the DOL to modify the model annual funding notice required under Pension Protection Act of 2006 (PPA) section 501(c) to include, prominently, the supplemental information required under new ERISA section 101(f)(2)(D).

On March 8, 2013, the DOL released EBSA Field Assistance Bulletin (FAB) 2013–01 concerning the new disclosure requirements mandated the MAP–21. The FAB addresses a need for interim guidance pending the adoption of regulations or other guidance under ERISA section 101(f), as amended by the MAP–21. The FAB sets forth technical questions and answers and provides a model supplement that plan administrators may use to discharge their MAP–21 disclosure obligations and provides that, pending further guidance and as a matter of enforcement policy, the DOL will treat a single employer DB plan administrator as satisfying MAP–21 requirements if the plan administrator complies with the guidance in the memorandum and otherwise acts in accordance with a good faith and reasonable interpretation of those requirements.

The DOL is requesting emergency processing, because guidance provided in the FAB is necessary for plan administrators to satisfy the annual funding notice requirements. The first annual funding notices reflecting the MAP–21 revisions for large calendar year plans must be sent out no later than April 30, 2013 (120 days after the close of the 2012 plan year). Therefore, use of the normal PRA clearance procedures is likely to cause public harm, because the statutory deadline would be missed and beneficiaries would not have access to information to which they are entitled by law.

This information collection is subject to the PRA. A Federal agency generally cannot conduct or sponsor a collection of information, and the public is generally not required to respond to an information collection, unless it is approved by the OMB under the PRA and displays a currently valid OMB Control Number. In addition, notwithstanding any other provisions of law, no person shall generally be subject to penalty for failing to comply with a collection of information if the collection of information does not display a valid OMB Control Number. *See* 5 CFR 1320.5(a) and 1320.6. The DOL obtains OMB approval for this information collection under OMB Control Number 1210–0126, and the FAB revises the ICR.

Interested parties are encouraged to send comments to the OMB, Office of Information and Regulatory Affairs and the DOL at the addresses shown in the **ADDRESSES** section by April 26, 2013. In order to help ensure appropriate consideration, comments should reference OMB Control Number 1210–0126. The OMB and DOL are particularly interested in comments that:

- Evaluate whether the proposed collection of information is necessary for the proper performance of the functions of the agency, including whether the information will have practical utility;
- Evaluate the accuracy of the agency's estimate of the burden of the proposed collection of information, including the validity of the methodology and assumptions used;
- Enhance the quality, utility, and clarity of the information to be collected; and
- Minimize the burden of the collection of information on those who are to respond, including through the use of appropriate automated, electronic, mechanical, or other technological collection techniques or other forms of information technology, e.g., permitting electronic submission of responses.

Agency: DOL–EBSA.

Title of Collection: Annual Funding Notice for Defined Benefit Pension Plans.

OMB Control Number: 1210–0126.

Requested Duration of Authorization: Six months.

Affected Public: Private Sector—businesses or other for-profits and not-for-profit institutions.

Total Estimated Number of Respondents: 27,534.

Frequency of Collection: Annual.

Total Estimated Number of Responses: 77,989,123.

Total Estimated Annual Burden Hours: 977,000.

Total Estimated Annual Other Costs Burden: $26,845,755.

Dated: March 21, 2013.

Michel Smyth,

Departmental Clearance Officer.

[FR Doc. 2013–07236 Filed 3–27–13; 8:45 am]

BILLING CODE 4510–29–P

DEPARTMENT OF LABOR

Employment and Training Administration

Comment Request for Information Collection: Program Reporting and Performance Standards System for Indian and Native American Programs Under the Workforce Investment Act (WIA); Extension With Revisions

AGENCY: Employment and Training Administration (ETA), Labor.

ACTION: Notice.

SUMMARY: The Department of Labor (Department), as part of its continuing effort to reduce paperwork and respondent burden, conducts a preclearance consultation program to provide the public and Federal agencies with an opportunity to comment on proposed and/or continuing collections of information in accordance with the Paperwork Reduction Act of 1995 [44 U.S.C. 3506(c)(2)(A)]. This program helps ensure that requested data can be provided in the desired format, reporting burden (time and financial resources) is minimized, collection instruments are clearly understood, and the impact of collection requirements on respondents can be properly assessed. Currently, ETA is soliciting comments concerning the continued collection of data to comply with program reporting and recordkeeping requirements of the Indian and Native American programs as authorized under Public Law 105–220, Workforce Investment Act of 1998 (WIA), section 166. Each grantee administering funds under the Indian and Native American programs is required to submit a Comprehensive Services Program (CSP) Report (ETA 9084), the Standardized Participant

Information Record (SPIR), and a Supplemental Youth Services (SYS) Program Report (ETA 9085). The ETA 9085 will collect information on the number of youth served between the ages of 14–21 rather than between the ages of 14–24. Also, the ETA 9084 and 9085 will now reflect the number of eligible veterans and spouses served. The current expiration date for this data collection is May 31, 2013.

DATES: Written comments must be submitted to the office listed in the addresses section below on or before May 28, 2013.

ADDRESSES: Submit written comments to Evangeline M. Campbell, Division of Indian and Native American Programs, Room S4209, Employment and Training Administration, U.S. Department of Labor, 200 Constitution Avenue NW., Washington, DC 20210. Telephone number: 202–693–3737 (this is not a toll-free number). Individuals with hearing or speech impairments may access the telephone number above via TTY by calling the toll-free Federal Information Relay Service at 1–877–889–5627 (TTY/TDD). Fax: 202–693–3817. Email: *Campbell.evangeline@dol.gov.* A copy of the proposed information collection request (ICR) can be obtained by contacting the office listed above.

SUPPLEMENTARY INFORMATION:

I. Background

Each Indian and Native American (INA) grantee receiving WIA, Section 166 funds (excluding Pub. L. 102–477 grantees) to administer the Comprehensive Services Program (CSP) is required to submit a CSP Report (ETA Form 9084) on a quarterly basis. Grantees receiving WIA Section 166 Supplemental Youth Services Program (SYSP) funds (excluding Pub. L. 102–477 grantees) currently submit a SYSP Report (ETA Form 9085) quarterly. This request to modify and extend the existing ETA Form 9084 and 9085 reports submitted each quarter by INA grantees is based on the following:

1. The Employment and Training Administration (ETA) requires the collection and reporting of data on eligible persons served under the WIA, Section 166 CSP and SYSP to assess the performance and delivery of services.

2. In addition, ETA requests a reporting enhancement for both the ETA 9084 and 9085 program reporting forms to comply with 2002 Jobs For Veterans Act (JVA) (Pub. L. 107–288), and its regulations, Priority of Service for Covered Persons (20 CFR 1010), and ETA policy (TEGL No. 10–09). The inclusion of reporting on JVA and veterans and eligible spouses to the reporting system allows the WIA, Section 166 grantee community, and ETA, an improved mechanism to track the provision of services provided by the WIA CSP and SYSP to the Native American veteran and eligible spouse population. This additional change is an enhancement to the reporting system on demographics and is not a performance-related element.

3. Finally, the American Recovery and Reinvestment Act of 2009 (ARRA) expanded the youth eligibility age to 14–24. ETA 9085 will now collect the number of youth served between the ages of 14–21, per WIA section 101(13).

II. Review Focus

The Department is particularly interested in comments which:

- Evaluate whether the proposed collection of information is necessary for the proper performance of the functions of the agency, including whether the information will have practical utility;
- evaluate the accuracy of the agency's estimate of the burden of the proposed collection of information, including the validity of the methodology and assumptions used;
- enhance the quality, utility, and clarity of the information to be collected; and
- minimize the burden of the collection of information on those who are to respond, including through the use of appropriate automated, electronic, mechanical, or other technological collection techniques or other forms of information technology, e.g., permitting electronic submissions of responses.

III. Current Actions

Type of Review: Extension with revisions.

Title: Program Reporting and Performance Standards System for Indian and Native American Programs.

OMB Number: 1205–0422.

Affected Public: Tribal Governments and Non-Profits.

Form(s): ETA 9084, ETA 9085.

Total Annual Responses: 19,908.

Annual Frequency: Quarterly.

Total Annual Respondents: 122 and 81.

Average Time per Response: 24 hours for ETA 9084; 24 hours for ETA 9085; 2.5 hours for the SPIR.

Estimated Total Annual Burden Hours: 20,908.

Total Annual Burden Cost for Respondents: $1,465,725.

Comments submitted in response to this comment request will be summarized and/or included in the request for OMB approval of the ICR and will also become a matter of public record.

Dated: Signed in Washington, DC, on this 22nd day of March, 2013.

Jane Oates,

Assistant Secretary for Employment and Training, Labor.

[FR Doc. 2013–07200 Filed 3–27–13; 8:45 am]

BILLING CODE 4510–FN–P

DEPARTMENT OF LABOR

Employment and Training Administration

Labor Certification Process for the Temporary Employment of Aliens in Agriculture in the United States: Prevailing Wage Rates for Certain Occupations Processed Under H–2A Special Procedures; Correction and Rescission

AGENCY: Employment and Training Administration, Labor.

ACTION: Correction to Notice; Rescission of Certain Wages for Specified States in Notice.

SUMMARY: The Department of Labor (we or the Department) is issuing this notice to correct a previous announcement of prevailing wage rates covering the employment of certain temporary or seasonal nonimmigrant foreign workers (H–2A workers) and certain domestic workers engaged in open range production of livestock in Texas, Wyoming, Idaho, Montana, North Dakota, South Dakota, and Oklahoma. In addition, the Department is rescinding the wage determinations listed in the January 8, 2013, **Federal Register** notice covering the employment of H–2A workers and certain domestic workers engaged in sheepherding and goatherding occupations in Arizona, Nevada, Oregon and Washington.

DATE: This notice is effective March 28, 2013.

FOR FURTHER INFORMATION CONTACT: For further information, contact William L. Carlson, Ph.D., Administrator, Office of Foreign Labor Certification, Employment and Training Administration, U.S. Department of Labor, 200 Constitution Avenue NW., Room C–4312, Washington, DC 20210; Telephone (202) 693–3010 (this is not a toll-free number). Individuals with hearing or speech impairments may access the telephone number above via TTY by calling the toll-free Federal Information Relay Service at 1–800–877–8339.

SUPPLEMENTARY INFORMATION: The H–2A nonimmigrant worker visa program

enables United States (U.S.) agricultural employers to employ foreign workers on a temporary basis to perform agricultural labor or services. Section 101(a)(15)(H)(ii)(a) of the Immigration and Nationality Act (INA or the Act), 8 U.S.C. 1101(a)(15)(H)(ii)(a); see also 8 U.S.C. 1184(c)(1) and 1188. The Department's H–2A regulations at 20 CFR 655.120(a) provide that employers must pay their H–2A workers and domestic workers in corresponding employment at least the highest of: (i) The Adverse Effect Wage Rate for the position; (ii) the prevailing hourly wage or piece rate; (iii) the agreed-upon collective bargaining wage, if applicable; or (iv) the Federal or State minimum wage, in effect at the time the work is performed, except where a special procedure has been approved for use in an occupation or specific class of agricultural employment.

On June 14, 2011, the Department issued a Training and Employment Guidance Letter (TEGL) revising special procedures for, among others, occupations involved in the open range production of livestock, which clarified the process for establishing the annual prevailing wage rates for those occupations. TEGL No. 15–06, Change 1, *Special Procedures: Labor Certification Process for Occupations Involved in the Open Range Production of Livestock under the H–2A Program* (the ''Open Range TEGL'').[1] On the same date, the Department also issued a TEGL revising special procedures for occupations involved in sheepherding and goatherding occupations, which clarified the process for establishing the annual prevailing wages for those occupations. TEGL No. 32–10, *Special Procedures: Labor Certification Process for Employers Engaged in Sheepherding and Goatherding Occupations under the H–2A Program* (the ''Sheepherding/Goatherding TEGL'').[2] Both documents were subsequently published in the **Federal Register**. 76 FR 47243 and 76 FR 47256 (Aug. 4, 2011).

For occupations involving the open range production of livestock and sheepherding and goatherding, where the SWA survey results were insufficient to establish a prevailing wage rate for an occupation due to inadequate sample size or another valid reason, both TEGLs' wage setting procedures allow the Department to issue a prevailing wage or piece rate for that State based on the wage rate findings submitted by an adjoining or proximate SWA for the same or similar agricultural activity. 76 FR at 47245 (open range livestock); 76 FR at 47258 (sheepherding and goatherding). In the event that the Department cannot establish a prevailing wage rate by using comparable survey data from an adjoining or proximate SWA, the Department will consider aggregating survey data across regions used by the U.S. Department of Agriculture. *Id.*

Correction of Certain Wages for Open Range Production of Livestock

On January 8, 2013, the Department published the special procedures wages in the **Federal Register**, which included wages for open range production of livestock, itinerant animal shearing, sheepherding, goatherding, and custom combine operations. 78 FR 1260 (Jan. 8, 2013) (''January 8 Notice''). These wages were issued with an immediate effective date. *Id.* The wage findings for open range production of livestock in Texas and Wyoming in the January 8 Notice were reported in error. Because the SWA surveys for Texas and Wyoming resulted in a ''no finding'' for open range production of livestock, the prevailing wage for those States should have been based on the wage rate findings submitted by an adjoining or proximate SWA for the same or similar agricultural activity, in accordance with the TEGL's wage setting guidance. Therefore, in the case of Texas and Wyoming, the prevailing wage for open range production of livestock will be based on the wage finding from Colorado, which adjoins Wyoming and is proximate to Texas, within the meaning of the TEGL.

In addition, the January 8 notice based the wage for open range production of livestock in Idaho, Montana, North Dakota, and South Dakota on Wyoming, the proximate State with a wage finding, and based the wage for the same occupation in Oklahoma on Texas, the adjoining State with a wage finding. Because we are correcting Texas and Wyoming wages in this notice, we therefore must also correct the wages for Idaho, Montana, North Dakota, South Dakota, and Oklahoma. The wage for Idaho, Montana, North Dakota, and South Dakota will be based on Colorado, a State proximate to those States, and the wage for Oklahoma will be based on Colorado, which directly borders Oklahoma. The wage table below, which we have reproduced in its entirety for ease of reference, reflects the corrected wages for Texas, Wyoming, Idaho, Montana, North Dakota, South Dakota and Oklahoma.

TABLE 1—PREVAILING WAGE RATES FOR THE OPEN RANGE PRODUCTION OF LIVESTOCK OCCUPATIONS

State	Prevailing wage rates for open range cattlehand/calver
Colorado	$875.00 Per Month Plus Room and Board.
Idaho	$875.00 Per Month Plus Room and Board.
Montana	$875.00 Per Month Plus Room and Board.
North Dakota	$875.00 Per Month Plus Room and Board.
Oklahoma	$875.00 Per Month Plus Room and Board.
South Dakota	$875.00 Per Month Plus Room and Board.
Texas:	
Region 1	$875.00 Per Month Plus Room and Board.
Region 2	$875.00 Per Month Plus Room and Board.
Region 3	$875.00 Per Month Plus Room and Board.
Region 4	$875.00 Per Month Plus Room and Board.
Utah	$875.00 Per Month Plus Room and Board.
Wyoming	$875.00 Per Month Plus Room and Board.

Rescission of Certain Wages for Sheepherding and Goatherding

In addition to the corrections above, the Department is rescinding the January 8 Notice for sheepherding and goatherding occupations in Arizona, Nevada, Oregon and Washington. The Department is taking this action because of issues regarding the wage finding process in these states. New data for these occupations will be collected by the SWAs in the near future, and the Department will review the data to ensure compliance with applicable law.

This rescission is effective as of January 8, 2013. The wages in these States for these occupations to be paid as of January 8, 2013 are based upon the previous prevailing wage findings issued by the Department for Arizona, Nevada, Oregon and Washington. The prevailing wage rates for sheepherding and goatherding in these states that are effective as of January 8, 2013 are listed below. The wage rate in California remains unchanged. Although the wage rates in the other jurisdictions have not changed, for ease of reference we reproduce the entire wage table as amended below.

[1] *http://wdr.doleta.gov/directives/corr_doc.cfm?DOCN=3044.*

[2] *http://wdr.doleta.gov/directives/corr_doc.cfm?docn=3042.*

TABLE 2—PREVAILING WAGE RATES FOR SHEEPHERDING AND GOATHERDING OCCUPATIONS

State	Prevailing wage rates for sheep/goat herder
Arizona	$750 Per Month Plus Room and Board.
California	$1,422.52 Per Month Plus Room and Board.
Colorado	$750.00 Per Month Plus Room and Board.
Idaho	$750.00 Per Month Plus Room and Board.
Montana	$750.00 Per Month Plus Room and Board.
Nevada	$800.00 Per Month Plus Room and Board.
New Mexico	$750.00 Per Month Plus Room and Board.
North Dakota	$750.00 Per Month Plus Room and Board.
Oklahoma	$750.00 Per Month Plus Room and Board.
Oregon	$1,227.67 Per Month Plus Room and Board.
Texas	$750.00 Per Month Plus Room and Board.
Utah	$750.00 Per Month Plus Room and Board.
Washington	$750.00 Per Month Plus Room and Board.
Wyoming	$750.00 Per Month Plus Room and Board.

Authority: 8 U.S.C. 1101(a)(15)(H)(ii)(a); 8 U.S.C. 1184(c)(1) and 1188.

Signed in Washington this 14th day of March 2013.

Jane Oates,

Assistant Secretary, Employment and Training Administration.

[FR Doc. 2013–07201 Filed 3–27–13; 8:45 am]

BILLING CODE 4510–FP–P

DEPARTMENT OF LABOR

Mine Safety and Health Administration

Petitions for Modification of Application of Existing Mandatory Safety Standards

AGENCY: Mine Safety and Health Administration, Labor.

ACTION: Notice.

SUMMARY: Section 101(c) of the Federal Mine Safety and Health Act of 1977 and 30 CFR Part 44 govern the application, processing, and disposition of petitions for modification. This notice is a summary of petitions for modification submitted to the Mine Safety and Health Administration (MSHA) by the parties listed below to modify the application of existing mandatory safety standards codified in Title 30 of the Code of Federal Regulations.

DATES: All comments on the petitions must be received by the Office of Standards, Regulations and Variances on or before April 29, 2013.

ADDRESSES: You may submit your comments, identified by ''docket number'' on the subject line, by any of the following methods:

1. *Electronic Mail: zzMSHA-comments@dol.gov.* Include the docket number of the petition in the subject line of the message.

2. *Facsimile:* 202–693–9441.

3. *Regular Mail or Hand Delivery:* MSHA, Office of Standards, Regulations and Variances, 1100 Wilson Boulevard, Room 2350, Arlington, Virginia 22209–3939, Attention: George F. Triebsch, Director, Office of Standards, Regulations and Variances. Persons delivering documents are required to check in at the receptionist's desk on the 21st floor. Individuals may inspect copies of the petitions and comments during normal business hours at the address listed above.

MSHA will consider only comments postmarked by the U.S. Postal Service or proof of delivery from another delivery service such as UPS or Federal Express on or before the deadline for comments.

FOR FURTHER INFORMATION CONTACT: Barbara Barron, Office of Standards, Regulations and Variances at 202–693–9447 (Voice), *barron.barbara@dol.gov* (Email), or 202–693–9441 (Facsimile). [These are not toll-free numbers.]

SUPPLEMENTARY INFORMATION:

I. Background

Section 101(c) of the Federal Mine Safety and Health Act of 1977 (Mine Act) allows the mine operator or representative of miners to file a petition to modify the application of any mandatory safety standard to a coal or other mine if the Secretary of Labor determines that:

1. An alternative method of achieving the result of such standard exists which will at all times guarantee no less than the same measure of protection afforded the miners of such mine by such standard; or

2. That the application of such standard to such mine will result in a diminution of safety to the miners in such mine.

In addition, the regulations at 30 CFR 44.10 and 44.11 establish the requirements and procedures for filing petitions for modification.

II. Petitions for Modification

Docket Number: M–2013–014–C.

Petitioner: Gibson County Coal, LLC, 3455 S 700 W, Owensville, Indiana 47665.

Mine: South Mine, MSHA I.D. No. 12–02388, located in Gibson County, Indiana.

Regulation Affected: 30 CFR 75.1700 (Oil and gas wells).

Modification Request: The petitioner requests a modification of the existing standard to permit oil and gas wells to be plugged using proven techniques described in this petition and then to mine in close proximity or through such plugged wells. The petitioner states that:

The following techniques and procedures will be used to plug the wellbore:

(1) A diligent effort will be made to clean the borehole to a depth which would permit the placement of at least 200 feet of expanding cement below the base of the Indiana #5 coal seam.

(2) When cleaning the borehole, a diligent effort will be made to remove all the casing in the borehole. If it is not possible to remove all casing, the casing which remains will be perforated, or ripped, at intervals spaced close enough to permit expanding cement slurry to infiltrate the annulus between the casing and the borehole wall for a distance of at least 200 feet below the base of the Indiana #5 coal seam.

(3) If the cleaned out borehole produces gas, a mechanical bridge plug will be placed in the borehole in a competent stratum at least 200 feet below the base of the Indiana #5 coal seam, but above the top of the uppermost hydrocarbon producing stratum. If it is not possible to set a mechanical bridge plug, a substantial brush plug may be used.

(4) Unless indicated by the individual well log for that particular hole or by borehole logs taken nearby, a log(s) will be made to determine the top and bottom of the Indiana #5 coal seam and potential hydrocarbon producing strata and the location of the bridge plug.

(5) If the uppermost hydrocarbon producing stratum is within 200 feet of the base of the Indiana #5 coal seam, properly placed mechanical bridge plugs or a suitable brush plug will be used to isolate the hydrocarbon producing stratum from the expanding cement plug. Nevertheless, a minimum of 200 feet of expanding cement will be placed below the Indiana #5 coal seam.

(6) The wellbore will be completely filled and circulated with a gel that inhibits any flow of gas, supports the walls of the borehole, and densifies the expanding cement. This gel will be pumped through open-end tubing run to a point approximately 20 feet above the bottom of the cleaned out area of the borehole or bridge plug.

The following procedures will be used when plugging gas or oil wells to the surface:

(1) A cement plug will be set in the wellbore by pumping expanding cement slurry down the tubing to displace the gel and fill the borehole to the surface. As an alternative, the cement slurry may be pumped down the tubing so that the borehole is filled with Portland cement or a Portland cement-fly ash mixture from a point approximately 100 feet above the top of the lowest mineable coal bed to the surface with an expanding cement plug extending from at least 200 feet below the lowest mineable coal bed to the bottom of the Portland cement. There will be at least 200 feet of expanding cement below the base of the Indiana #5 coal seam.

(2) A surface casing or a small quantity of steel turnings, or other small magnetic particles, will be embedded in the top of the cement near the surface to serve as a permanent magnetic monument of the borehole, if a steel surface casing is not present. As an alternative, a steel rod may be driven into the ground next to the borehole.

The following procedures will be used when plugging oil and gas wells for subsequent use as degasification boreholes:

(1) A cement plug will be set in the wellbore by pumping expanding cement slurry down the tubing to displace the gel and provide at least 200 feet of expanding cement below the Indiana #5 coal seam. The top of the expanding cement will extend upward to a point above the top of the coal bed being mined. This distance will be based on the average height of the roof strata breakage for the mine.

(2) To facilitate methane drainage, degasification casing of suitable diameter, slotted or perforated throughout its lower 150 to 200 feet, will be set in the borehole to a point 10 to 30 feet above the top of the expanding cement.

(3) The annulus between the degasification casing and the borehole wall will be cemented from a point immediately above the slots or perforations to the surface.

(4) The degasification casing will be cleaned out for its total length.

(5) The top of the degasification casing will be fitted with a wellhead equipped as required by the District Manager. Such equipment may include check valves, shut-in valves, sampling port, flame arrestor equipment, and security fencing.

The following procedures will apply to mining through a plugged oil and gas well:

(1) The operator will notify the District Manager (DM) or designee prior to mining within 300 feet of the well, and when a specific plan is developed for mining through each well.

(2) Mining in close proximity to or through a plugged well will be done on a shift approved by the DM or designee.

(3) The DM or designee and the appropriate State agency will be notified by the operator in sufficient time prior to the mining through operation in order to have an opportunity to have representatives present.

(4) When using continuous mining methods, drivage sights will be installed at the last open crosscut near the place to be mined to ensure intersection of the well. The drivage sights will not be more than 80 feet from the well.

(5) Firefighting equipment, including fire extinguishers, rock dust and enough fire hose to reach the working face will be available near the working place.

(6) Sufficient supplies of roof support and ventilation materials will be available near the working places.

(7) The quantity of air required by the approved ventilation system and methane and dust control plan, but not less than 9,000 cubic feet of air per minute, will be used to ventilate the working face during the mining through operation.

(8) Equipment will be checked for permissibility and serviced on the shift prior to mining through the well.

(9) The methane monitor on the continuous mining machine will be calibrated on the shift prior to mining through the well.

(10) When mining is in progress, tests for methane will be made with a hand-held methane detector at least every 10 minutes from the time mining with the continuous mining machine is within 30 feet of the well until the well is intersected and immediately prior to mining through.

(11) The working place will be free from accumulations of coal dust and coal spillages, and rock dust will be placed on the roof, rib, and floor to within 20 feet of the face when mining through the well.

(12) When the wellbore is intersected all equipment will be de-energized and the place thoroughly examined and determined safe before mining is resumed. Any well casing will be removed and no open flame will be permitted in the area until adequate ventilation has been established around the wellbore.

(13) After a well has been intersected and the working place determined safe, mining will continue inby the well a sufficient distance to permit adequate ventilation around the area of the wellbore.

(14) No person will be permitted in the area of the mining through operation except those actually engaged in the operation, company personnel, personnel from MSHA, and personnel from the appropriate State agency.

(15) The mining through operation will be under the direct supervision of a certified individual. Instruction concerning the mining through operation will be issued only by the certified individual in charge.

The petitioner further states that room and pillar mining methods employing continuous miners are currently used.

The petitioner asserts that the proposed alternate method will at all times provide no less than or a greater measure of safety than is intended by the existing standard due to the elimination of possible gas flow, the simplification of the mine ventilation system, and a more efficient flow of air throughout the mine.

Docket Number: M–2013–005–M.

Petitioner: Newmont USA Limited, 1655 Mountain City Highway, Elko, Nevada 89801.

Mine: Twin Creeks Mine, MSHA I.D. No. 26–01942, located in Humboldt County, Nevada.

Regulation Affected: 30 CFR 56.6309 (Fuel oil requirements for ANFO).

Modification Request: The petitioner requests a modification of the existing standard to permit the use of recycled oil with diesel fuel to manufacture a mixture of ammonium nitrate and fuel oil ANFO for blasting. The petitioner states that:

(1) Only filtered petroleum-based recycled oils from equipment at the Twin Creeks Mine will be used for the purpose of blending with diesel fuel to create a blasting agent from a mixture of ANFO. The oil will not contain any hazardous waste material listed in Subpart D, Title 40 CFR Part 261.

(2) The used oil will be recycled by filtering and then stored in tanks used exclusively for this purpose. The contents of each storage tank will have no additional oil or other products, with the exception of diesel fuel (#2) or more tested used oil, added until the contents of each tank have been depleted.

(3) The used oil will be filtered using two filters, 60 mesh and 100 mesh arranged in series to ensure the oil has no larger particle size than 147 microns. These filters will be cleaned/replaced on a regularly scheduled basis, or whenever the filter becomes clogged to the extent that a pressure differential of 70 PSI exists across the filter tank.

(4) Analyses will be conducted on each batch load of oil after the entire

contents of the tank is thoroughly mixed and filtered to ensure that the oil meets the following specifications derived from Table 1 in 40 CFR 279.11:

(1) Arsenic 5 ppm maximum
(2) Cadmium 2 ppm maximum
(3) Chromium 10 ppm maximum
(4) Lead 100 ppm maximum
(5) Total Halogens 1,000 ppm maximum
(6) Flash Point 100–135 Degrees F Minimum

Flash point will be derived using an open cup ASTM test. The frequency of testing and analyses for these specifications may be reduced upon the adequate submittal of records to the District Manager (DM) showing a demonstrated record of meeting the specifications, and a written authorization from the DM allowing the reduction in testing frequency.

(5) Oil not meeting specifications will be resampled and retested immediately. Any load failing two consecutive tests will be rejected and placed in a designated storage tank and will be removed for proper disposal by a licensed recycling company.

(6) Recycled oil will be stored in a tank used exclusively for this purpose. The oil will be further checked for water and ethylene glycol in shop storage tanks prior to blending with diesel fuel. If either is observed, the water and or ethylene glycol will be drained prior to blending and disposed of in an approved manner.

(7) High viscosity oils of 90W or above will be restricted to less than 10 percent of the total quantity of recycled oil in the storage tank.

(8) Clean diesel fuel will be added to recycled oil to create blended fuel oil. The blend of recycled oil and diesel fuel will not exceed 50 percent recycled oil, a 1:1 ratio. The recycled oil will be introduced with diesel fuel using a blending facility manufactured for the purpose of this process. The blending facility will pull diesel fuel from one tank and recycled oil from another tank blending the two ingredients prior to dispensing into the blasting agent delivery truck. Mixing will ensure recirculation of at least three times the total volume of diesel fuel and recycled oil. The blending facility will be provided with a locking system to prevent unauthorized personnel from tampering with the settings of the facility to ensure the proper blend of recycled oil and diesel fuel is achieved.

(9) Absorption testing will be conducted initially on the blended oil to verify the proper mixing ratio. Records of viscosity tests, absorption tests and temperature will be maintained. Analysis of the data will determine if the ratio of diesel fuel to recycled oil needs to be adjusted seasonally to ensure proper viscosity and absorption. Written procedures will be developed to ensure the optimum blending ratio is being used. Should low temperatures cause the blended oil to become too viscous for proper absorption (at least 6 percent fuel by weight) in the ammonium nitrate prills, the ratio of recycled oil diesel fuel blend will be adjusted to increase the volume of the diesel fuel.

(10) Each new batch of blended fuel oil will be tested for sensitivity by combining the blended fuel oil and the appropriate volume of ammonium nitrate prills. This ANFO mixture will be subjected to the detonation of a No. 8 blasting cap. For each new batch of blended fuel oil, this test will be performed on at least 3 samples, each having minimum dimension of 3–3/8 inches in diameter and 6–3/8 inches long. Each detonator will be placed near the center of each sample. Each sample container must be non-rigid, such as paper products, to minimize confining effects upon initiation. If detonation occurs on any sample, the batch of blended fuel oil will not be used to produce ANFO. Records of whether or not each sample detonated will be maintained on the mine property and made available for MSHA review on request for at least a year.

(11) The recycled oil will be transferred as needed from the shop ''used oil'' storage tank to the recycled oil storage/distribution tank at the prill silo storage area in batches. Each batch will be sampled and tested during this portion of the handling process prior to dispensing for use through the blending facility. Bulk ANFO delivery-mixing vehicles will draw blended fuel oil from this blending facility tank.

(12) The use of blended fuel oil will be suspended when low temperatures cause the mixture to become too viscous for proper absorption by ammonium nitrate prill. Additional fuel may be added to the blended fuel oil to reduce the viscosity and allow its use. Any fuel added in this circumstance will be noted in the blending log. The blending facility will have the capability to adjust the ''blend'' to 30, 40, or 50 percent recycled oil depending on availability of recycled oil and or viscosity concerns.

(13) The recycled oil will be transported and used in a closed system which prevents skin contact, inhalation of vapors and ingestion. Personal Protective Equipment as required by 30 CFR 56.15006 will be provided.

(14) Records will be maintained with the following oil transfer, recycling and testing information. Each truck load of recycled oil from the shop storage tank will be assigned a unique control number for tracking. A log will be maintained with the name of the operator, date, oil source (shop storage tank), gallons transferred, verification of filtering, oil sample number, and pass/fail test results for Items listed in paragraph number 4.

(15) Records will also include the dates of all filter cleaning/replacing activities.

(16) Blasting records for each shot employing the blended oil will be maintained and identified as a shot using blended fuel oil. The records will include the date of loading and blasting, type of initiation system, primer type and size, size and depth of all boreholes, number and location within the shot of all boreholes, quantities of blended oil and what percent of blend, quantities of ANFO used in the shot, and quantities as well as type of emulsions (heavy ANFO) employed in the shot. The use of any plastic hole-liners will also be recorded. The records will be maintained on the mine property and made available to MSHA on request for at least one year.

(17) Emulsions (heavy ANFO) will not be used with the blended oil unless the manufacturer of the emulsion certifies compatibility. Certification will be maintained on the mine property and made available to MSHA on request.

(18) Misfires will be reported to mine management by the end of the shift as required in 30 CFR 56.6311.

(19) The blended fuel oil mixture will be used only on the mine property. Mixing of the blended oil and ammonium nitrate prill is intended for immediate use and will not be stored as a mixed product. The blended fuel oil ANFO mixture will be used in minimum hole-diameters of six inches.

(20) A lockout system will be provided on all oil transfer, recycled oil, and blending facilities to prevent unauthorized use or tampering. Only properly trained and authorized personnel will have keys to operate the lockout system.

(21) All storage tanks will be equipped with a secondary containment system to prevent spillage and accidental discharge of oil or diesel fuel oil.

(22) The blended oil will not be used in blasting operations in confined spaces or underground.

The petitioner asserts that the proposed alternative method will guarantee the miners no less than the same method of protection as that afforded by the existing standard.

Docket Number: M–2013–006–M.

Petitioner: The Doe Run Company, 6854 Hwy KK, Bunker, Missouri 63629.

Mine: Fletcher Mine, MSHA I.D. No. 23–00409, located in Reynolds County, Missouri.

Regulation Affected: 30 CFR 57.11052(d) (Refuge areas).

Modification Request: The petitioner requests a modification of the existing standard to permit the use of an alternative method of compliance to maintain compressed air cylinders in lieu of compressed air lines in refuge chambers. The petitioner states that:

(1) The refuge chamber would be provided with compressed air cylinders and a suitable regulator as well as always remain in the fresh air circuit of the mine's ventilation.

(2) Bottled water will be maintained in the refuge chamber in lieu of waterlines as required by the standard.

(3) The refuge chambers are provided as a safety precaution in the event miners are unable to escape from the mine in an emergency.

(4) Three compressed air cylinders and bottled water for the refuge chamber will be available if needed during the mine emergency.

(5) The chamber will always remain in the fresh air, maintaining an acceptable air quality for an indefinite time period. Air and water lines may be damaged in the event of a mine emergency.

The petitioner asserts that having compressed air cylinders, the refuge chamber in the fresh air circuit of mine's ventilation, and bottled water in the chamber, will always guarantee the miners affected no less than the same measure of protection afforded by the standard.

Dated: March 22, 2013.

George F. Triebsch,

Director, Office of Standards, Regulations and Variances.

[FR Doc. 2013–07163 Filed 3–27–13; 8:45 am]

BILLING CODE 4510–43–P

NATIONAL TRANSPORTATION SAFETY BOARD

Lithium Ion Batteries in Transportation Public Forum

On Thursday and Friday, April 11–12, 2013, the National Transportation Safety Board (NTSB) will convene a forum titled, ''Lithium Ion Batteries in Transportation.'' The forum will begin at 9:00 a.m. on both days and is open to all. Attendance is free, and no registration is required. The NTSB Chairman Deborah A.P. Hersman will serve as the presiding officer of the forum, and all five NTSB Board Members will serve as members of the Board of Inquiry. The forum is organized into three topic areas:

- Lithium ion battery design, development, and use;
- Lithium ion battery regulations and standards; and
- Lithium ion battery applications and safety in transportation.

The NTSB has previously expressed concerns regarding the safe transportation of lithium batteries on aircraft. The presence of and use of lithium ion batteries in transportation is not, however, limited to aviation. Through this forum, the NTSB will highlight the role of lithium ion batteries across all modes of transportation, manufacturing processes, design standards, failure rates, and regulations and other standards associated with their use and shipping.

Expert panelists will include representatives from government agencies, industry suppliers, safety experts, and the research community. Below is the preliminary agenda:

Thursday, April 11 (9:00 a.m.–4:30 p.m.)

1. Opening Statement by Chairman Hersman
2. Introduction of the Officers, technical panel, and panelists
3. Presentations from Panels One and Two and questions from the Officers and Technical Panel
4. Closing statement by Chairman Hersman

Friday, April 12 (9:00 a.m.–12:30 p.m.)

1. Opening Statement by Chairman Hersman
2. Presentations from Panel Three and questions from the Officers and Technical Panel
3. Closing statement by Chairman Hersman

Panel topics will include the following:

Panel 1—Design, Development, and Use of Lithium Ion Battery Technology

Panel 2—Regulations and Standards for Lithium Ion Batteries; and

Panel 3—Lithium Ion Battery Applications and Safety in Transportation.

The full agenda and a list of participants can be found at: *www.ntsb.gov/BatteryForum.*

The forum will be held in the NTSB Board Room and Conference Center, located at 429 L'Enfant Plaza E SW., Washington, DC. The public can view the forum in person or by live Webcast at *www.ntsb.gov.* Webcast archives are generally available by the end of the next day following the forum, and Webcasts are archived for a period of 3 months from after the date of the event.

Individuals requesting specific accommodations should contact Rochelle Hall at *Rochelle.hall@ntsb.gov* or by phone at (202) 314–6305 by Monday, April 8, 2013.

NTSB Media Contact: *Peter Knudson—peter.knudson@ntsb.gov.*

NTSB Forum Manager: *Michael E. Hiller—michael.hiller@ntsb.gov.*

NTSB Forum Coordinator: *Jennifer Cheek—jennifer.cheek@ntsb.gov.*

Dated: March 22, 2013.

Candi R. Bing,

Federal Register Liaison Officer.

[FR Doc. 2013–07101 Filed 3–27–13; 8:45 am]

BILLING CODE 7533–01–P

OFFICE OF PERSONNEL MANAGEMENT

Submission for Review: It's Time to Sign Up for Direct Deposit or Direct Express, RI 38–128

AGENCY: U.S. Office of Personnel Management.

ACTION: 30-Day Notice and request for comments.

SUMMARY: The Retirement Services, Office of Personnel Management (OPM), offers the general public and other Federal agencies the opportunity to comment on revised information collection request (ICR) 3206–0226, It's Time to Sign Up for Direct Deposit or Direct Express. As required by the Paperwork Reduction Act of 1995, (Pub. L. 104–13, 44 U.S.C. chapter 35) as amended by the Clinger-Cohen Act (Pub. L. 104–106), OPM is soliciting comments for this collection. The information collection was previously published in the **Federal Register** on November 2, 2012, at Volume 77 FR 66190, allowing for a 60-day public comment period. No comments were received for this information collection. The purpose of this notice is to allow an additional 30 days for public comments. The Office of Management and Budget is particularly interested in comments that:

1. Evaluate whether the proposed collection of information is necessary for the proper performance of functions of OPM, including whether the information will have practical utility;

2. Evaluate the accuracy of OPM's estimate of the burden of the proposed collection of information, including the validity of the methodology and assumptions used;

3. Enhance the quality, utility, and clarity of the information to be collected; and

4. Minimize the burden of the collection of information on those who

are to respond, including through the use of appropriate automated, electronic, mechanical, or other technological collection techniques or other forms of information technology, e.g., permitting electronic submissions of responses.

DATES: Comments are encouraged and will be accepted until April 29, 2013. This process is conducted in accordance with 5 CFR 1320.1.

ADDRESSES: Interested persons are invited to submit written comments on the proposed information collection by mail to the Office of Information and Regulatory Affairs, Office of Management and Budget, 725 17th Street NW., Washington, DC 20503, Attention: Desk Officer for the Office of Personnel Management, by email to *oira_submission@omb.eop.gov,* or by fax to (202) 395–6974.

FOR FURTHER INFORMATION CONTACT: A copy of this ICR, with applicable supporting documentation, may be obtained by contacting the Office of Information and Regulatory Affairs, Office of Management and Budget, 725 17th Street NW., Washington, DC 20503, Attention: Desk Officer for the Office of Personnel Management, by email to *oira_submission@omb.eop.gov,* or by fax to (202) 395–6974.

SUPPLEMENTARY INFORMATION: RI 38–128 is primarily used by OPM to give recent retirees the opportunity to waive Direct Deposit of their annuity payments. The form is sent only if the separating agency did not give the retiring employee this election opportunity. This form may also be used to enroll in Direct Deposit, which was its primary use before Public Law 104–134 was passed. This law requires OPM to make all recurring benefits payments electronically to beneficiaries who live where Direct Deposit is available. Beneficiaries who do not enroll in the Direct Deposit Program will be enrolled in Direct Express.

Analysis

Agency: Retirement Operations, Retirement Services, Office of Personnel Management.

Title: It's Time to Sign Up for Direct Deposit or Direct Express.

OMB Number: 3206–0226.

Frequency: On occasion.

Affected Public: Individuals or households.

Number of Respondents: 20,000.

Estimated Time per Respondent: 30 minutes.

Total Burden Hours: 10,000 hours.

U.S. Office of Personnel Management.

John Berry,

Director.

[FR Doc. 2013–07199 Filed 3–27–13; 8:45 am]

BILLING CODE 6325–38–P

OFFICE OF PERSONNEL MANAGEMENT

Submission for Review; New Information Collection: Freedom of Information/Privacy Act Record Request Form (INV 100)

AGENCY: U.S. Office of Personnel Management.

ACTION: 30-Day Notice and request for comments.

SUMMARY: Federal Investigative Services (FIS), U.S. Office of Personnel Management (OPM) offers the general public and other Federal agencies the opportunity to comment on a new information collection request (ICR), Office of Management and Budget (OMB) Control No. 3206–NEW, for the Freedom of Information/Privacy Act Record Request Form (INV 100). As required by the Paperwork Reduction Act of 1995, (Pub. L. 104–13, 44 U.S.C. chapter 35) as amended by the Clinger-Cohen Act (Pub. L. 104–106), OPM is soliciting comments for this collection. The Office of Management and Budget (OMB) is particularly interested in comments that:

1. Evaluate whether the proposed collection of information is necessary for the proper performance of the functions of OPM, including whether the information will have practical utility;
2. Evaluate the accuracy of OPM's estimate of the burden of the proposed collection of information, including the validity of the methodology and assumptions used;
3. Enhance the quality, utility, and clarity of the information to be collected; and
4. Minimize the burden of the collection of information on those who are to respond, including through the use of appropriate automated, electronic, mechanical, or other technological collection techniques or other forms of information technology, e.g., permitting electronic submissions of responses.

DATES: Comments are encouraged and will be accepted until April 29, 2013. This process is conducted in accordance with 5 CFR 1320.1.

ADDRESSES: Interested persons are invited to submit written comments on the proposed information collection to the Office of Information and Regulatory Affairs, Office of Management and Budget, 725 17th Street NW., Washington, DC 20503, Attention: Desk Officer for the Office of Personnel Management, by email to *oira_submission@opm.eop.gov* or by fax to (202) 395–6974; and Federal Investigative Service, U.S Office of Personnel Management, 1900 E Street NW., Washington, DC 20415, Attention: Laura Eury or sent via email to *FISFormsComments@opm.gov.*

FOR FURTHER INFORMATION CONTACT: A copy of this ICR, with applicable supporting documentation, may be obtained by contacting OPM by mail at Federal Investigative Services, U.S. Office of Personnel Management, 1900 E Street NW., Washington, DC 20415, Attention: Laura Eury, or by email to *FISFormsComments@opm.gov.*

SUPPLEMENTARY INFORMATION: OPM's Federal Investigative Services (FIS), Freedom of Information and Privacy Act (FOI/PA) office proposes use of this optional form (INV 100) to standardize collection of data elements specific to FOIA and Privacy Act record requests submitted to FIS. Current FOIA and Privacy Act record requests are submitted to FIS–FOI/PA in a format chosen by the requester, yet consistent with the published regulations at 5 CFR 294 and 5 CFR 297, respectively. Often the requests are missing data elements that require contact with the requester by mail, thereby adding time to the process. Standardization of the access process will increase the volume of perfected requests received. This will strike an appropriate balance between the public's burden in submitting requests and FIS–FOI/PA's ability to accurately identify sought records and to verify the identity of the Privacy Act requester, ensuring that protected records are not inappropriately released to third parties. It is estimated that 16,626 individuals will respond annually. The INV 100 takes approximately 5 minutes to complete. The estimated annual burden is 1,386 hours.

The 60-day **Federal Register** Notice was published in the **Federal Register** on August 31, 2012, (**Federal Register** Notices/Vol. 77, Number 170, pages 53237–53238) as required by 5 CFR 1320, affording the public an opportunity to comment on the form. Four comments were received from the National Archives and Records Administration's (NARA) Office of Government Information Services (OGIS), recommending verbiage clarity in Section 5–7. OGIS recommended that in Section 5, which is optional, OPM should provide an example of an

instance where the requester would want to complete this section. OPM added the OGIS suggested verbiage ''By completing this section, you authorize information relating to you to be released to another person, such as a family member or legal counsel.'' OGIS recommended that in Section 6, Verification of Requester's Identity, OPM should change the verbiage, for clarity, from ''the person named above'' to ''the person named in Section 2.'' OPM accepted the comment and changed the verbiage. OGIS recommended that in Section 7, because a requester is generally not required to state the purpose of his or her request, OPM replace the introductory sentence to state, ''In the box below, you may wish to provide information about yourself and the purpose of your request to help us determine your fee category. While FOIA does not require a requester to state the purpose of a request, fees may be reduced based on the nature of the requester or purpose of the request.'' OPM accepted the comment and changed the verbiage. OGIS further recommended a rewrite in Section 7 to state, ''I request a waiver or reduction of fees because I am (check one of the three options listed below):'' so requesters may check all of the options that apply. This will provide clarity because fee waivers are different from fee categories, and the two are not mutually exclusive. OPM accepted the comment and changed the verbiage to state, ''I request a waiver or reduction of fees because I am (check all options listed below that apply):''.

U.S. Office of Personnel Management.

John Berry,

Director.

[FR Doc. 2013–07202 Filed 3–27–13; 8:45 am]

BILLING CODE 6325–53–P

OFFICE OF PERSONNEL MANAGEMENT

Submission for Review: CSRS/FERS Documentation in Support of Disability Retirement Application, SF 3112

AGENCY: U.S. Office of Personnel Management.

ACTION: 30-Day Notice and request for comments.

SUMMARY: The Retirement Services, Office of Personnel Management (OPM) offers the general public and other Federal agencies the opportunity to comment on an extension, without change, of currently approved information collection request (ICR) 3206–0228, CSRS/FERS Documentation in Support of Disability Retirement Application, SF 3112. As required by the Paperwork Reduction Act of 1995 (Pub. L. 104–13, 44 U.S.C. chapter 35) as amended by the Clinger-Cohen Act (Pub. L. 104–106), OPM is soliciting comments for this collection. This information collection was previously published in the **Federal Register** on November 2, 2012, at Volume 77 FR 66189, allowing for a 60-day public comment period. No comments were received for this information collection. The purpose of this notice is to allow an additional 30 days for public comments. The Office of Management and Budget is particularly interested in comments that:

1. Evaluate whether the proposed collection of information is necessary for the proper performance of functions of OPM, including whether the information will have practical utility;
2. Evaluate the accuracy of OPM's estimate of the burden of the proposed collection of information, including the validity of the methodology and assumptions used;
3. Enhance the quality, utility, and clarity of the information to be collected; and
4. Minimize the burden of the collection of information on those who are to respond, including through the use of appropriate automated, electronic, mechanical, or other technological collection techniques or other forms of information technology, e.g., permitting electronic submissions of responses.

DATES: Comments are encouraged and will be accepted until April 29, 2013. This process is conducted in accordance with 5 CFR 1320.1.

ADDRESSES: Interested persons are invited to submit written comments on the proposed information collection by mail to the Office of Information and Regulatory Affairs, Office of Management and Budget, 725 17th Street NW., Washington, DC 20503, Attention: Desk Officer for the Office of Personnel Management, by email to *oira_submission@omb.eop.gov,* or by fax to (202) 395–6974.

FOR FURTHER INFORMATION CONTACT: A copy of this ICR, with applicable supporting documentation, may be obtained by contacting the Office of Information and Regulatory Affairs, Office of Management and Budget, 725 17th Street NW., Washington, DC 20503, Attention: Desk Officer for the Office of Personnel Management, by email to o*ira_submission@omb.eop.gov,* or by fax to (202) 395–6974.

SUPPLEMENTARY INFORMATION: SF 3112 collects information from an applicant for disability retirement so that OPM can determine whether to approve a disability retirement. The applicant will only complete Standard Forms 3112A and 3112C. Standard Forms 3112B, 3112D and 3112E will be completed by the immediate supervisor and the employing agency of the applicant.

Analysis

Agency: Retirement Operations, Retirement Services, Office of Personnel Management.

Title: CSRS/FERS Documentation in Support of Disability Retirement Application.

OMB Number: 3206–0228.

Frequency: On occasion.

Affected Public: Individuals or households.

Number of Respondents: SF 3112A = 1,350; SF 3112C = 12,100.

Estimated Time per Respondent: SF 3112A = 30 minutes; SF 3112C = 60 minutes.

Total Burden Hours: 12,775.

U.S. Office of Personnel Management.

John Berry,

Director.

[FR Doc. 2013–07156 Filed 3–27–13; 8:45 am]

BILLING CODE 6325–38–P

OFFICE OF PERSONNEL MANAGEMENT

Submission for Review: Request to Disability Annuitant for Information on Physical Condition and Employment, RI 30–1

AGENCY: U.S. Office of Personnel Management.

ACTION: 30-Day Notice and request for comments.

SUMMARY: The Retirement Services, Office of Personnel Management (OPM) offers the general public and other Federal agencies the opportunity to comment on revised information collection request (ICR) 3206–0143, Request to Disability Annuitant for Information on Physical Condition and Employment, RI 30–1. As required by the Paperwork Reduction Act of 1995, (Pub. L. 104–13, 44 U.S.C. chapter 35) as amended by the Clinger-Cohen Act (Pub. L. 104–106), OPM is soliciting comments for this collection. The information collection was previously published in the **Federal Register** on November 2, 2012, at Volume 77 FR 66188, allowing for a 60-day public comment period. No comments were received for this information collection. The purpose of this notice is to allow an additional 30 days for public comments. The Office of Management and Budget

is particularly interested in comments that:

1. Evaluate whether the proposed collection of information is necessary for the proper performance of functions of OPM, including whether the information will have practical utility;

2. Evaluate the accuracy of OPM's estimate of the burden of the proposed collection of information, including the validity of the methodology and assumptions used;

3. Enhance the quality, utility, and clarity of the information to be collected; and

4. Minimize the burden of the collection of information on those who are to respond, including through the use of appropriate automated, electronic, mechanical, or other technological collection techniques or other forms of information technology, e.g., permitting electronic submissions of responses.

DATES: Comments are encouraged and will be accepted until April 29, 2013. This process is conducted in accordance with 5 CFR 1320.1.

ADDRESSES: Interested persons are invited to submit written comments on the proposed information collection by mail to the Office of Information and Regulatory Affairs, Office of Management and Budget, 725 17th Street NW., Washington, DC 20503, Attention: Desk Officer for the Office of Personnel Management, by email to *oira_submission@omb.eop.gov,* or by fax to (202) 395–6974.

FOR FURTHER INFORMATION CONTACT: A copy of this ICR, with applicable supporting documentation, may be obtained by contacting the Office of Information and Regulatory Affairs, Office of Management and Budget, 725 17th Street NW., Washington, DC 20503, Attention: Desk Officer for the Office of Personnel Management or sent via email to *oira_submission@omb.eop.gov* or faxed to (202) 395–6974.

SUPPLEMENTARY INFORMATION: RI 30–1 is used by persons under age 60 who are receiving a disability annuity and are subject to inquiry regarding their medical condition as OPM deems reasonably necessary. RI 30–1 collects information as to whether the disabling condition has changed.

Analysis

Agency: Retirement Operations, Retirement Services, Office of Personnel Management.

Title: Request to Disability Annuitant for Information on Physical Condition and Employment.

OMB Number: 3206–0143.

Frequency: On occasion.

Affected Public: Individuals or households.

Number of Respondents: 8,000.

Estimated Time per Respondent: 60 minutes.

Total Burden Hours: 8,000 hours.

U.S. Office of Personnel Management.

John Berry,

Director.

[FR Doc. 2013–07154 Filed 3–27–13; 8:45 am]

BILLING CODE 6325–38–P

OFFICE OF PERSONNEL MANAGEMENT

Submission for Review: Application to Make Deposit or Redeposit (CSRS), SF 2803, and Application to Make Service Credit Payment for Civilian Service (FERS), SF 3108

AGENCY: U.S. Office of Personnel Management.

ACTION: 30-Day Notice and request for comments.

SUMMARY: The Retirement Services, Office of Personnel Management (OPM), offers the general public and other Federal agencies the opportunity to comment on a revised information collection request (ICR) 3206–0134 on two forms: Application to Make Deposit or Redeposit (CSRS) and Application to Make Service Credit Payment for Civilian Service (FERS). As required by the Paperwork Reduction Act of 1995 (Pub. L. 104–13, 44 U.S.C. chapter 35) as amended by the Clinger-Cohen Act (Pub. L. 104–106), OPM is soliciting comments for this collection. This information collection was previously published in the **Federal Register** on December 7, 2012, at Volume 77 FR 73061, allowing for a 60-day public comment period. No comments were received for this information collection. The purpose of this notice is to allow an additional 30 days for public comments. The Office of Management and Budget is particularly interested in comments that:

1. Evaluate whether the proposed collection of information is necessary for the proper performance of functions of OPM, including whether the information will have practical utility;

2. Evaluate the accuracy of OPM's estimate of the burden of the proposed collection of information, including the validity of the methodology and assumptions used;

3. Enhance the quality, utility, and clarity of the information to be collected; and

4. Minimize the burden of the collection of information on those who are to respond, including through the use of appropriate automated, electronic, mechanical, or other technological collection techniques or other forms of information technology, e.g., permitting electronic submissions of responses.

DATES: Comments are encouraged and will be accepted until April 29, 2013. This process is conducted in accordance with 5 CFR 1320.1.

ADDRESSES: Interested persons are invited to submit written comments on the proposed information collection by mail to the Office of Information and Regulatory Affairs, Office of Management and Budget, 725 17th Street NW., Washington, DC 20503, Attention: Desk Officer for the Office of Personnel Management, by email to *oira_submission@omb.eop.gov,* or by fax to (202) 395–6974.

FOR FURTHER INFORMATION CONTACT: A copy of this ICR, with applicable supporting documentation, may be obtained by contacting the Office of Information and Regulatory Affairs, Office of Management and Budget, 725 17th Street NW., Washington, DC 20503, Attention: Desk Officer for the Office of Personnel Management, by email to *oira_submission@omb.eop.gov,* by fax to (202) 395–6974.

SUPPLEMENTARY INFORMATION: SF 2803, Application to Make Deposit or Redeposit (CSRS), and SF 3108, Application to Make Service Credit Payment for Civilian Service (FERS), are applications to make payment by persons who are eligible to pay for Federal service not subject to retirement deductions and/or for Federal service not subject to retirement deductions that were subsequently refunded to the applicant.

Analysis

Agency: Retirement Operations, Retirement Services, Office of Personnel Management.

Title: Application to Make Deposit or Redeposit (CSRS), and Application to Make Service Credit Payment for Civilian Service (FERS).

OMB Number: 3206–0134.

Frequency: On occasion.

Affected Public: Individuals or Households.

Number of Respondents: 150.

Estimated Time per Respondent: 30 minutes.

Total Burden Hours: 75.

U.S. Office of Personnel Management.

John Berry,

Director.

[FR Doc. 2013–07158 Filed 3–27–13; 8:45 am]

BILLING CODE 6325–38–P

POSTAL REGULATORY COMMISSION

[Docket No. CP2013–54; Order No. 1681]

Negotiated Service Agreement

AGENCY: Postal Regulatory Commission.

ACTION: Notice

SUMMARY: The Commission is noticing a recent Postal Service filing concerning a promotional program involving a temporary change in rates of general applicability for Global Express Guaranteed. This notice informs the public of the filing, invites public comment, and takes other administrative steps.

DATES: *Comments are due:* April 1, 2013.

ADDRESSES: Submit comments electronically via the Commission's Filing Online system at *http://www.prc.gov.* Those who cannot submit comments electronically should contact the person identified in the **FOR FURTHER INFORMATION CONTACT** section by telephone for advice on filing alternatives.

FOR FURTHER INFORMATION CONTACT: Stephen L. Sharfman, General Counsel, at 202–789–6820.

SUPPLEMENTARY INFORMATION: *Introduction.* On March 20, 2013, the Postal Service, pursuant to 39 CFR 3015.2, filed notice with the Commission addressing a promotional program involving a temporary change in rates of general applicability for Global Express Guaranteed (2013 GXG Promotion).[1]

The Notice, in conformance with Commission rules 3015.2(b) and 3015.3(b), includes an explanation and justification for the change; identifies the effective date and duration of the 2013 GXG Promotion; and presents a schedule of the changed rates. *Id.* at 2. Attachment 1 presents proposed Mail Classification Schedule language addressing the 2013 GXG Promotion. *Id.* Attachment 1. Attachment 2 is the certified statement regarding prices required by Commission rule 3015.3(c)(3). *Id.* Attachment 2. Attachment 3 is an Application for Non-Public Treatment of Materials filed under seal. *Id.* Attachment 3. The sealed materials include the discounted promotional rates for GXG and additional supporting documentation, including financial workpapers that detail resulting revenue effects. *Id.* at 3. The Postal Service also filed redacted versions of the sealed materials. *Id.*

Authority to offer discounts. The Postal Service states that Governors' Decision No. 12–02, issued September 13, 2012, provides that the Postal Service may offer one or more promotions in the form of a discount or rebate on certain GXG and EMI (Express Mail International) items, during an established promotional period, to mailers that comply with the promotional program's eligibility requirements. Notice at 2. (Footnote omitted.) It further states that the Commission has acknowledged that the Postal Service would be filing potential promotions and that appropriate language will be added to the draft MCS once the Commission reviews and approves particular promotions. *Id.* (Footnote omitted.)

Description and justification. In Docket No. CP2013–3, the Postal Service provided notice of changes in rates of general applicability and of corresponding classification changes for competitive products, including GXG. *Id.* at 1–2. The 2013 GXG Promotion will provide certain eligible mailers with a discount on GXG during the promotional period, which begins April 29, 2013 and extends, at the latest, to June 1, 2013, through a decrease off the applicable Commercial Base or Commercial Plus price for GXG items for existing customers using Global Shipping Software (GSS). *Id.* at 3. The Postal Service states that the purpose is to increase interest in GXG service among businesses by offering a promotional sale, and that it is designed to stimulate volume growth and provide customers with an incentive to use GXG. *Id.*

Additional terms. The following terms and conditions also apply:

- the promotion is only applicable to Postal Service customers with a GSS account during the promotion period;
- no registration is required;
- the promotion is not valid with any other USPS promotion, and excludes GSS customers that have a Global Expedited Package Services Contract, a Global Plus Contract, a Global Reseller Expedited Package Contract, or a Global Expedited Package Services–Non-Published Rates Contract;
- all other standards in International Mail Manual section 210 apply;
- the discount does not apply to optional insurance coverage in excess of $100;
- the promotional discount is limited to the equivalent of $10,000 in total discounts for Commercial Base and Commercial Plus postage for Global Express Guaranteed items per GSS account holder during the promotion period;
- customers may opt out of the promotion by contacting GSS customer support directly; and
- the Postal Service reserves the right, without prior notice, to end the promotion before June 1, 2013 and to make changes to the promotion (except for changes that affect the percentage discount offered under the promotion).

Id. at 3–4.

Customer notification. The Postal Service states that once the Commission completes its review of the 2013 GXG Promotion, eligible customers will be notified about the promotion, participation, and applicable terms and conditions by email. *Id.* at 4–5.

Revenue effects and reporting. The Postal Service states that financial workpapers provide estimates of the financial impact of the 2013 GXG Promotion. *Id.* at 5. It further states that GXG prices combined with the rates in the 2013 GXG Promotion are in compliance with 39 U.S.C. 3633. *Id.* The Postal Service states that it intends to report revenue for GXG published rates through the Annual Compliance Report, and therefore proposes that the Commission create no special report requirement concerning the 2013 GXG Promotion. *Id.*

Initial Commission action. The Commission hereby provides notice of the Postal Service's filing concerning the 2013 GXG Promotion and the establishment of related Docket No. CP2013–54. The Commission invites interested persons to express views and offer comments on whether the planned changes are consistent with 39 U.S.C. 3633. Comments are due no later than April 1, 2013.

Pursuant to 39 U.S.C. 505, the Commission appoints Kenneth R. Moeller to serve as officer of the Commission (Public Representative) to represent the interests of the general public in the above-captioned docket.

It is ordered:

1. The Commission establishes Docket No. CP2013–54 to provide interested persons an opportunity to express views and offer comments on whether the planned changes are consistent with the policies of 39 U.S.C. 3633 or 3642.

2. Comments are due no later than April 1, 2013.

3. The Commission appoints Kenneth R. Moeller as Public Representative to represent the interests of the general public in this proceeding.

4. The Secretary shall arrange for publication of this Notice in the **Federal Register**.

[1] United States Postal Service Notice of Promotional Rates for Global Express Guaranteed Service, March 20, 2013 (Notice).

By the Commission.

Shoshana M. Grove,

Secretary.

[FR Doc. 2013–07223 Filed 3–27–13; 8:45 am]

BILLING CODE 7710–FW–P

POSTAL REGULATORY COMMISSION

[Docket No. CP2013–6; Order No. 1680]

Negotiated Service Agreement

AGENCY: Postal Regulatory Commission.

ACTION: Notice.

SUMMARY: The Commission is noticing a recent Postal Service filing concerning an amendment to Priority Mail Contract 46. This notice informs the public of the filing, invites public comment, and takes other administrative steps.

DATES: *Comments are due:* March 29, 2013.

ADDRESSES: Submit comments electronically via the Commission's Filing Online system at *http://www.prc.gov.* Those who cannot submit comments electronically should contact the person identified in the **FOR FURTHER INFORMATION CONTACT** section by telephone for advice on filing alternatives.

FOR FURTHER INFORMATION CONTACT: Stephen L. Sharfman, General Counsel, at 202–789–6820.

SUPPLEMENTARY INFORMATION:

Table of Contents

I. Introduction
II. Notice of Filings
III. Ordering Paragraphs

I. Introduction

On March 21, 2013, the Postal Service filed notice that it has agreed to an amendment to the existing Priority Mail Contract 46 (Amendment), which was added to the competitive product list in this docket.[1] In its Notice, the Postal Service includes Attachment A, a redacted copy of the Amendment. It also filed the unredacted Amendment under seal.

The Postal Service asserts that the ''supporting financial documentation and financial certification initially provided in this docket remain applicable,'' and that the Amendment ''will not materially affect the cost coverage'' of the agreement. *Id.* at 1. It also seeks to incorporate by reference the Application for Non-Public Treatment originally filed in this docket for the protection of customer-identifying information that it has filed under seal. *Id.*

The Amendment changes the annual adjustment mechanism for the second and third years of the contract. *Id.* Attachment A at 1. In particular, it bases the price increases for the second and third years of the agreement on the average increase in prices of general applicability for ''Priority Mail Commercial Plus'' rather than the average increase in prices of general applicability for ''Priority Mail Retail.'' *Id.* The Postal Service intends for the Amendment to become effective on the first business day after the date that the Commission completes its review of the Notice. *Id.*

II. Notice of Filings

Interested persons may submit comments on whether the changes presented in the Postal Service's Notice are consistent with the policies of 39 U.S.C. 3632, 3633, or 3642, 39 CFR 3015.5, and 39 CFR part 3020, subpart B. Comments are due no later than March 29, 2013. The public portions of these filings can be accessed via the Commission's Web site (*http://www.prc.gov*).

The Commission appoints Lawrence Fenster to serve as Public Representative in this docket.

III. Ordering Paragraphs

It is ordered:

1. The Commission shall reopen Docket No. CP2013–6 to consider the amendment to Priority Mail Contract 46.

2. Pursuant to 39 U.S.C. 505, Lawrence Fenster is appointed to serve as an officer of the Commission (Public Representative) to represent the interests of the general public in these proceedings.

3. Comments by interested persons in these proceedings are due no later than March 29, 2013.

4. The Secretary shall arrange for publication of this Order in the **Federal Register**.

By the Commission.

Shoshana M. Grove,

Secretary.

[FR Doc. 2013–07129 Filed 3–27–13; 8:45 am]

BILLING CODE 7710–FW–P

[1] Notice of United States Postal Service of Amendment to Priority Mail Contract 46, With Portions Filed Under Seal, March 21, 2013 (Notice).

SECURITIES AND EXCHANGE COMMISSION

[Release No. 34–69215; File No. S7–24–89]

Joint Industry Plan; Notice of Filing and Immediate Effectiveness of Amendment No. 27 to the Joint Self-Regulatory Organization Plan Governing the Collection, Consolidation and Dissemination of Quotation and Transaction Information for Nasdaq-Listed Securities Traded on Exchanges on an Unlisted Trading Privileges Basis Submitted by the BATS Exchange, Inc., BATS Y-Exchange, Inc., Chicago Board Options Exchange, Incorporated, Chicago Stock Exchange, Inc., EDGA Exchange, Inc., EDGX Exchange, Inc., Financial Industry Regulatory Authority, Inc., International Securities Exchange LLC, NASDAQ OMX BX, Inc., NASDAQ OMX PHLX LLC, Nasdaq Stock Market LLC, National Stock Exchange, Inc., New York Stock Exchange LLC, NYSE MKT LLC, and NYSE Arca, Inc.

March 22, 2013.

Pursuant to Section 11A of the Securities Exchange Act of 1934 (''Act''),[1] and Rule 608 thereunder,[2] notice is hereby given that on March 22, 2013, the operating committee (''Operating Committee'' or ''Committee'') [3] of the Joint Self-Regulatory Organization Plan Governing the Collection, Consolidation, and Dissemination of Quotation and Transaction Information for Nasdaq-Listed Securities Traded on Exchanges on an Unlisted Trading Privilege Basis (''Nasdaq/UTP Plan'' or ''Plan'') filed with the Securities and Exchange Commission (''Commission'') an amendment to the Plan.[4] This

[1] 15 U.S.C. 78k–1.

[2] 17 CFR 242.608.

[3] The Plan Participants (collectively, ''Participants'') are the: BATS Exchange, Inc.; BATS Y-Exchange, Inc.; Chicago Board Options Exchange, Incorporated; Chicago Stock Exchange, Inc.; EDGA Exchange, Inc.; EDGX Exchange, Inc.; Financial Industry Regulatory Authority, Inc.; International Securities Exchange LLC; NASDAQ OMX BX, Inc.; NASDAQ OMX PHLX LLC; Nasdaq Stock Market LLC; National Stock Exchange, Inc.; New York Stock Exchange LLC; NYSE MKT LLC; and NYSE Arca, Inc.

[4] The Plan governs the collection, processing, and dissemination on a consolidated basis of quotation information and transaction reports in Eligible Securities for each of its Participants. This consolidated information informs investors of the current quotation and recent trade prices of Nasdaq securities. It enables investors to ascertain from one data source the current prices in all the markets trading Nasdaq securities. The Plan serves as the required transaction reporting plan for its Participants, which is a prerequisite for their trading Eligible Securities. *See* Securities Exchange

Continued

amendment represents Amendment No. 27 (''Amendment'') to the Plan and proposes to revise the metric by which the Participants calculate the annual increase in the Enterprise Maximum. Pursuant to Rule 608(b)(3)(i) under the Act, the Participants designated the Amendment as establishing or changing a fee or other charge collected on behalf of all of the Participants in connection with access to, or use of, the facilities contemplated by the Amendment. As a result, the Amendment has been put into effect upon filing with the Commission. At any time within 60 days of the filing of the Amendment, the Commission may summarily abrogate the Amendment and require that the Amendment be refiled in accordance with paragraph (a)(1) of Rule 608 and reviewed in accordance with paragraph (b)(2) of Rule 608, if it appears to the Commission that such action is necessary or appropriate in the public interest, for the protection of investors, or the maintenance of fair and orderly markets, to remove impediments to, and perfect the mechanisms of, a national market system or otherwise in furtherance of the purposes of the Act. The Commission is publishing this notice to solicit comments from interested persons.

I. Rule 608(a)

A. Purpose of the Amendments

The Participants propose to revise the metric by which the Participants calculate the annual increase in the Enterprise Maximum.

Paragraph (e) of Exhibit 2 to the Plan provides that an entity that is registered as a broker/dealer under the Securities Exchange Act of 1934 is not required to pay more than the ''Enterprise Maximum'' for any month for each entitlement system. The ''Enterprise Maximum'' equals the aggregate amount of fees payable for distribution of UTP Level 1 Service to nonprofessional subscribers that are brokerage account customers of the broker/dealer. Paragraph (e) provides that the Enterprise Maximum shall increase by the ''Annual Increase Amount'' each year.

Currently, the ''Annual Increase Amount'' for any calendar year equals the percentage increase in the annual composite share volume for the preceding calendar year, subject to a maximum annual increase of five percent; provided, however, that the Participants may determine to waive the ''Annual Increase Amount'' for any calendar year.

In this amendment, the Participants propose to change the methodology for calculating the ''Annual Increase Amount.'' For each calendar year, the proposed formulation would permit an increase in the monthly enterprise maximum provided that no such annual increase could exceed four percent of the then current Enterprise Maximum amount.

This proposed means for determining the increase in the broker-dealer Enterprise Maximum would reduce the amount of any one year's permissible increase from five percent to four percent and would better reflect inflation than does the current means. The maximum four percent increase is consistent with the average cost of living adjustment (''COLA'') as published by the Social Security Administration for the past 38 years.

The Participants adopted the Enterprise Maximum in 2010 and set it at $600,000 for that year. It currently remains at $600,000. They propose to increase the amount of the Enterprise Maximum by four percent to $624,000, effective April 1, 2013. The number of firms reaching the enterprise caps is minimal.

B. Governing or Constituent Documents

Not applicable.

C. Implementation of Amendment

All of the Participants have manifested their approval of the proposed Amendment by means of their execution of the Amendment. The Participants propose to make the rate changes effective as of April 1, 2013.

D. Development and Implementation Phases

Not applicable.

E. Analysis of Impact on Competition

The proposed Amendment does not impose any burden on competition that is not necessary or appropriate in furtherance of the purposes of the Exchange Act.

The Participants in the NASDAQ/UTP Plan have not raised the amount of the Enterprise Maximum since they first adopted it in 2010. The change would affect a very small number of broker-dealers, as few firms take advantage of the Enterprise Maximum.

In addition, the proposed change to the metric for calculating the annual increase in the Enterprise Maximum is identical to the metric that the Participants in the CTA and CQ Plans have adopted for their enterprise maximums. As a result, this Amendment promotes consistency in price structures among the national market system plans and would make market data fees easier to administer.

In the Participants' view, the proposed fee schedule would allow broker-dealers with large numbers of nonprofessional subscriber brokerage account customers to contribute an appropriate amount for their receipt and use of market data under the Plan. The proposed fee change would provide for an equitable allocation of dues, fees, and other charges among broker-dealers, vendors, end users and others receiving and using market data made available under the Plans.

The Participants would apply the revised metric uniformly to all broker-dealers qualifying for the Enterprise Maximum and do not believe that the proposed change introduces terms that are unreasonably discriminatory.

F. Written Understanding or Agreements Relating to Interpretation of, or Participation in, Plan

The Participants have no written understandings or agreements relating to interpretation of the Plan as a result of the Amendment.

G. Approval by Sponsors in Accordance With Plan

Each of the Plan's Participants has executed a written Amendment to the Plan.

H. Description of Operation of Facility Contemplated by the Proposed Amendment

Not applicable.

I. Terms and Conditions of Access

See Item A(1) above.

J. Method of Determination and Imposition, and Amount of, Fees and Charges

The Participants believe that the proposed change to the metric for calculating the annual increase in the Enterprise Maximum provides a fair basis for taking inflation into account for the Enterprise Maximum. They believe it is fair and reasonable and provides for an equitable allocation of dues, fees, and other charges among vendors, data recipients and other persons using the Participants' facilities.

K. Method and Frequency of Processor Evaluation

Not applicable.

L. Dispute Resolution

Not applicable.

Act Release No. 55647 (April 19, 2007) 72 FR 20891 (April 26, 2007).

II. Rule 601(a)

A. Equity Securities for Which Transaction Reports Shall Be Required by the Plan

Not applicable.

B. Reporting Requirements

Not applicable.

C. Manner of Collecting, Processing, Sequencing, Making Available and Disseminating Last Sale Information

Not applicable.

D. Manner of Consolidation

Not applicable.

E. Standards and Methods Ensuring Promptness, Accuracy and Completeness of Transaction Reports

Not applicable.

F. Rules and Procedures Addressed to Fraudulent or Manipulative Dissemination

Not applicable.

G. Terms of Access to Transaction Reports

Not applicable.

H. Identification of Marketplace of Execution

Not Applicable.

III. Solicitation of Comments

The Commission seeks general comments on Amendment No. 27. Interested persons are invited to submit written data, views, and arguments concerning the foregoing, including whether the proposal is consistent with the Act. Comments may be submitted by any of the following methods:

Electronic Comments

- Use the Commission's Internet comment form (*http://www.sec.gov/rules/sro.shtml);* or
- Send an email to *rule-comments@sec.gov.* Please include File Number S7–24–89 on the subject line.

Paper Comments

- Send paper comments in triplicate to Elizabeth M. Murphy, Secretary, Securities and Exchange Commission, 100 F Street NE., Washington, DC 20549–1090.

All submissions should refer to File Number S7–24–89. This file number should be included on the subject line if email is used. To help the Commission process and review your comments more efficiently, please use only one method. The Commission will post all comments on the Commission's Web site (*http://www.sec.gov/rules/sro.shtml).* Copies of the submission, all written statements with respect to the proposed Plan Amendment that are filed with the Commission, and all written communications relating to the proposed Plan Amendment between the Commission and any person, other than those that may be withheld from the public in accordance with the provisions of 5 U.S.C. 552, will be available for Web site viewing and printing in the Commission's Public Reference Room on official business days between the hours of 10:00 a.m. and 3:00 p.m. Copies of the filing also will be available for Web site viewing and printing at the Office of the Secretary of the Committee, currently located at the CBOE, 400 S. LaSalle Street, Chicago, IL 60605. All comments received will be posted without change; the Commission does not edit personal identifying information from submissions. You should submit only information that you wish to make available publicly. All submissions should refer to File Number S7–24–89 and should be submitted on or before April 18, 2013.

For the Commission, by the Division of Trading and Markets, pursuant to delegated authority.[5]

Kevin M. O'Neill,

Deputy Secretary.

[FR Doc. 2013–07191 Filed 3–27–13; 8:45 am]

BILLING CODE 8011–01–P

SECURITIES AND EXCHANGE COMMISSION

[Release No. 34–69218; File No. SR–Phlx–2013–26]

Self-Regulatory Organizations; NASDAQ OMX PHLX LLC; Notice of Filing and Immediate Effectiveness of Proposed Rule Change To Amend Exchange Rule 3100

March 22, 2013.

Pursuant to Section 19(b)(1) of the Securities Exchange Act of 1934 (''Act''),[1] and Rule 19b–4 [2] thereunder, notice is hereby given that on March 11, 2013, NASDAQ OMX PHLX LLC (''Phlx'' or ''Exchange'') filed with the Securities and Exchange Commission (''SEC'' or ''Commission'') the proposed rule change as described in Items I and II below, which Items have been prepared by the Exchange. The Commission is publishing this notice to solicit comments on the proposed rule change from interested persons.

I. Self-Regulatory Organization's Statement of the Terms of Substance of the Proposed Rule Change

The Exchange is filing with the Commission a proposal to amend Exchange Rule 3100 to establish rules to comply with the requirements of the Plan to Address Extraordinary Market Volatility submitted to the Commission pursuant to Rule 608 of Regulation NMS.

The text of the proposed rule change is available on the Exchange's Web site at *http://nasdaqomxphlx.cchwallstreet.com,* at the principal office of the Exchange, at the Commission's Public Reference Room, and on the Commission's Web site at *http://www.sec.gov.*

II. Self-Regulatory Organization's Statement of the Purpose of, and Statutory Basis for, the Proposed Rule Change

In its filing with the Commission, the Exchange included statements concerning the purpose of and basis for the proposed rule change and discussed any comments it received on the proposed rule change. The text of these statements may be examined at the places specified in Item IV below. The Exchange has prepared summaries, set forth in Sections A, B, and C below, of the most significant aspects of such statements.

A. Self-Regulatory Organization's Statement of the Purpose of, and Statutory Basis for, the Proposed Rule Change

1. Purpose

The Exchange proposes to amend Exchange Rule 3100 to establish rules to comply with the requirements of the Plan to Address Extraordinary Market Volatility submitted to the Commission pursuant to Rule 608 of Regulation NMS under the Act (the ''Plan'').[3]

Background

Since May 6, 2010, when the markets experienced excessive volatility in an abbreviated time period, *i.e.,* the ''flash crash,'' the equities exchanges and FINRA have implemented market-wide measures designed to restore investor confidence by reducing the potential for excessive market volatility. Among the measures adopted include pilot plans for stock-by-stock trading pauses [4] and

[5] 17 CFR 200.30–3(a)(27).

[1] 15 U.S.C. 78s(b)(1).

[2] 17 CFR 240.19b–4.

[3] *See* Securities Exchange Act Release No. 68953 (Feb. 20, 2013) (Notice of Filing and Immediate Effectiveness of the Second Amendment to the National Market System Plan to Address Extraordinary Market Volatility, File No. 4–631).

[4] *See, e.g.,* PSX Rule 3100.

related changes to the equities market clearly erroneous execution rules [5] and more stringent equities market maker quoting requirements. On May 31, 2012, the Commission approved the Plan, as amended, on a one-year pilot basis.[6] In addition, the Commission approved changes to the equities market-wide circuit breaker rules on a pilot basis to coincide with the pilot period for the Plan.[7]

The Plan is designed to prevent trades in individual NMS Stocks from occurring outside of specified Price Bands.[8] As described more fully below, the requirements of the Plan are coupled with Trading Pauses to accommodate more fundamental price moves (as opposed to erroneous trades or momentary gaps in liquidity). All trading centers in NMS Stocks, including both those operated by Participants and those operated by members of Participants, are required to establish, maintain, and enforce written policies and procedures that are reasonably designed to comply with the requirements specified in the Plan.[9] As set forth in more detail in the Plan, Price Bands consisting of a Lower Price Band and an Upper Price Band for each NMS Stock are calculated by the Processors.[10] When the National Best Bid (Offer) is below (above) the Lower (Upper) Price Band, the Processors shall disseminate such National Best Bid (Offer) with an appropriate flag identifying it as non-executable. When the National Best Bid (Offer) is equal to the Upper (Lower) Price Band, the Processors shall distribute such National Best Bid (Offer) with an appropriate flag identifying it as a Limit State Quotation.[11] All trading centers in NMS Stocks must maintain written policies and procedures that are reasonably designed to prevent the display of offers below the Lower Price Band and bids above the Upper Price Band for NMS Stocks. Notwithstanding this requirement, the Processor shall display an offer below the Lower Price Band or a bid above the Upper Price Band, but with a flag that it is non-executable. Such bids or offers shall not be included in the National Best Bid or National Best Offer calculations.[12]

Trading in an NMS Stock immediately enters a Limit State if the National Best Offer (Bid) equals but does not cross the Lower (Upper) Price Band.[13] Trading for an NMS stock exits a Limit State if, within 15 seconds of entering the Limit State, all Limit State Quotations were executed or canceled in their entirety. If the market does not exit a Limit State within 15 seconds, then the Primary Listing Exchange would declare a five-minute Trading Pause pursuant to Section VII of the LULD Plan, which would be applicable to all markets trading the security.[14] In addition, the Plan defines a Straddle State as when the National Best Bid (Offer) is below (above) the Lower (Upper) Price Band and the NMS Stock is not in a Limit State. For example, assume the Lower Price Band for an NMS Stock is $9.50 and the Upper Price Band is $10.50, such NMS stock would be in a Straddle State if the National Best Bid were below $9.50, and therefore non-executable, and the National Best Offer were above $9.50 (including a National Best Offer that could be above $10.50). If an NMS Stock is in a Straddle State and trading in that stock deviates from normal trading characteristics, the Primary Listing Exchange may declare a Trading Pause for that NMS Stock.

Proposed Amendment to Rule 3100

The Exchange is required by the Plan to establish, maintain, and enforce written policies and procedures that are reasonably designed to comply with the limit up-limit down and trading pause requirements specified in the Plan. In response to the new Plan, the Exchange proposes to amend its Rules accordingly.

The Exchange proposes to add Rule 3100(a)(5)(A)(1) to define that ''Plan'' means the Plan to Address Extraordinary Market Volatility Submitted to the Securities and Exchange Commission Pursuant to Rule 608 of Regulation NMS under the Securities Exchange Act of 1934, Exhibit A to Securities Exchange Act Release No. 67091 (May 31, 2012), 77 FR 33498 (June 6, 2012). In addition, proposed Rule 3100(a)(5)(A)(2) provides that all capitalized terms not otherwise defined in this Rule shall have the meanings set forth in the Plan or Exchange rules, as applicable.

The Exchange proposes to add Rule 3100(a)(5)(C) to provide that Exchange members shall comply with the applicable provisions of the Plan. The Exchange believes that this requirement will help ensure the compliance by its members with the provisions of the Plan as required pursuant to Section II(B) of the Plan.[15]

The Exchange proposes to add Rule 3100(a)(5)(D) to provide that Exchange systems shall not display or execute buy (sell) interest above (below) the Upper (Lower) Price Bands, unless such interest is specifically exempted under the Plan. The Exchange believes that this requirement is reasonably designed to help ensure the compliance with the limit up-limit down and trading pause requirements specified in the Plan, by preventing executions outside the Price Bands as required pursuant to Section VI(A)(1) of the Plan.[16]

The Exchange proposes Rules regarding the treatment of certain trading interest on the Exchange in order to prevent executions outside the Price Bands and to comply with the new LULD Plan. In particular, the Exchange proposes to add Rule 3100(a)(5)(E) to provide that Exchange systems shall re-price or cancel buy (sell) interest that is priced or could be executed above (below) the Upper (Lower) Price Band. Any interest that is repriced pursuant to this Rule shall receive a new time stamp and new execution priority.[17] Specifically, the Exchange proposes the following provisions regarding the repricing or canceling of certain trading interest:

- *Market Orders.* If a market order with a time in force other than Immediate or Cancel cannot be fully executed at or within the Price Bands, Exchange systems shall post the unexecuted portion of the buy (sell) market order at the Upper (Lower) Price Band.
- *Limit-priced Interest.* Both displayable and non-displayable incoming limit-priced interest to buy (sell) that is priced above (below) the Upper (Lower) Price Band shall be

[5] *See, e.g.,* PSX Rule 3312.

[6] *See* Securities Exchange Act Release No. 67091 (May 31, 2012), 77 FR 33498 (June 6, 2012) (File No. 4–631) (Order Approving, on a Pilot Basis, the National Market System Plan To Address Extraordinary Market Volatility).

[7] *See* Securities Exchange Act Release No. 67090 (May 31, 2012), 77 FR 33531 (June 6, 2012) (SR–BATS–2011–038; SR–BYX–2011–025; SR–BX–2011–068; SR–CBOE–2011–087; SR–C2–2011–024; SR–CHX–2011–30; SR–EDGA–2011–31; SR–EDGX–2011–30; SR–FINRA–2011–054; SR–ISE–2011–61; SR–NASDAQ–2011–131; SR–NSX–2011–11; SR–NYSE–2011–48; SR–NYSEAmex-2011–73; SR–NYSEArca-2011–68; SR–Phlx–2011–129).

[8] Unless otherwise specified, capitalized terms used in this rule filing are based on the defined terms of the Plan.

[9] The Exchange is a Participant in the Plan.

[10] *See* Section (V)(A) of the Plan.

[11] *See* Section VI(A) of the Plan.

[12] *See* Section VI(A)(3) of the Plan.

[13] *See* Section VI(B)(1) of the Plan.

[14] The primary listing market would declare a trading pause in an NMS Stock; upon notification by the primary listing market, the Processor would disseminate this information to the public. No trades in that NMS Stock could occur during the trading pause, but all bids and offers may be displayed. *See* Section VII(A) of the Plan.

[15] *See* Section II(B) of the Plan.

[16] *See* Section VI(A)(1) of the Plan.

[17] PSX believes it is appropriate for re-priced orders to receive a new time stamp and new execution priority rather than jump ahead of previously-entered orders. In effect, an adjustment in price is equivalent to the entry of a new order; that function is simply being automated.

repriced to the Upper (Lower) Price Band. The treatment of limit-priced interest will depend upon its order entry protocol. For limit-priced orders entered via the OUCH protocol, the order shall be re-priced upon entry only if the Price Bands are such that the price of the limit-priced interest to buy (sell) would be above (below) the upper (lower) Price Band. Once slid, the treatment of that interest will further depend upon whether it becomes passive or aggressive interest. Specifically, if the order becomes passively priced such that the Price Bands move and the price of the order to buy (sell) would be below (below) the lower (upper) Price Band, the order will not be re-priced again. Rather, the order will either remain on the book at the same price or be cancelled back to the entering party, depending on how the entering party has configured its order entry port. If the interest becomes aggressively priced such that the Price Bands move and the price of the order to buy (sell) would be above (below) the upper (lower) Price Band, the order will not be re-priced again. Rather, the order will be cancelled.

• For limit-priced orders entered via RASH or FIX protocols, the order shall priced upon order entry and then shall be eligible to be repriced by the system multiple times if the Price Bands move such that the price of resting limit-priced interest to buy (sell) would be above (below) the upper (lower) Price Band. Once slid, if the Price Bands move such that the price of resting limit interest to buy (sell) would be below (above) the upper (lower) Price Band the order will continue to be repriced either to its original limit price or to the new price bands, whichever is less aggressive.[18]

• *IOC Orders.* If an IOC order cannot be fully executed at or within the Price Bands, Exchange systems shall cancel any unexecuted portion of the IOC Order.

• *Routable Orders.* Exchange systems shall not route buy (sell) interest to an away market displaying a sell (buy) quote that is above (below) the Upper (Lower) Price Band. Orders that are eligible to be routed to away destinations will be price slid before routing if the buy (sell) is priced above (below) the Upper (Lower) Price Band.

• *Sell Short Orders.* During a Short Sale Price Test, as defined in Rule 4763(b), Short Sale Orders priced below the Lower Price Band shall be repriced to the higher of the Lower Price Band or the Permitted Price, as defined in Rule 4763(b).

The Exchange believes these provisions are reasonably designed to prevent executions outside the Price Bands as required by the limit up-limit down and trading pause requirements specified in the Plan.

The Exchanges also proposes to amend Rule 3100(a)(4) regarding Trading Pauses to correspond with the LULD Plan. The proposed change clarifies that the Exchange will continue to follow pauses called by the primary listing market for each security until such time as the LULP Plan is fully implemented. As a result, during Phase 1 of the LULD Plan, a Trading Pause in Tier 1 NMS Stocks shall be subject to the requirements of the LULD Plan and a Trading Pause in Tier 2 NMS Stocks shall be subject to the requirements set forth in Exchange 3100(a)(4). Once the Plan has been fully implemented and all NMS Stocks are subject to the Plan, a Trading Pause under the Plan shall be subject to Exchange Rule 3100(a)(5). These proposed changes are designed to comply with Section VIII of the LULD Plan to ensure implementation of the Plan's requirements.[19]

2. Statutory Basis

The Exchange believes the proposed rule change is consistent with Section 6(b) of the Act[20] in general, and furthers the objectives of Section 6(b)(5),[21] in particular, in that it is designed to promote just and equitable principles of trade, remove impediments to and perfect the mechanisms of a free and open market and a national market system and, in general, to protect investors and the public interest.

The proposal will ensure that the Exchange systems will not display or execute trading interest outside the Price Bands in a manner that promotes just and equitable principles of trade and removes impediments to, and perfects the mechanism of, a free and open market and a national market system.

The proposal will also ensure that the trading interest on the Exchange is either repriced or canceled in a manner that is consistent with just and equitable principles of trade and removes impediments to, and perfects the mechanism of, a free and open market and a national market system. Specifically, when trading interest is re-priced to comply with the requirements of the Plan, that trading interest will receive a new timestamp and new execution priority. Re-pricing is the automated equivalent of the entry of a new order which would, if done manually, result in a new timestamp and placement in the execution queue. The proposal will help market participants to continue to trade NMS Stocks within Price Bands in compliance with the Plan with certainty on how orders and trading interest will be treated. Reducing uncertainty regarding the treatment and priority of trading interest with the Price Bands should help encourage market participants to continue to provide liquidity during extraordinary market volatility.

The proposal will also ensure that orders in NMS Stocks are not routed to other exchanges in situations where an execution may occur outside Price Bands, and thus promotes just and equitable principles of trade and removes impediments to, and perfects the mechanism of, a free and open market and a national market system.

B. Self-Regulatory Organization's Statement on Burden on Competition

The Exchange does not believe that the proposed rule change will impose any burden on competition that is not necessary or appropriate in furtherance of the purposes of the Act. To the contrary, the proposal is specifically designed to ensure cooperation between and among all national securities exchanges and FINRA to promote uniform and effective regulation of the national market system. The proposal is specifically aimed at reducing competition among exchanges that is based on differences in regulations, otherwise known as regulatory arbitrage. In actuality, the proposal is pro-competitive because it promotes fair and orderly markets and investor protection, which in turn will restore investor confidence and attract more investors into U.S. equities markets.

C. Self-Regulatory Organization's Statement on Comments on the Proposed Rule Change Received From Members, Participants, or Others

Written comments were neither solicited nor received.

[18] The NASDAQ system will treat limit-priced orders differently depending upon whether the entering firm uses the OUCH protocol on one hand or the RASH or FIX protocols on the other. This different treatment stems from the ultimate destination for orders entered via those protocols. Orders entered via OUCH are destined for direct entry to the NASDAQ matching engine. As such, they are not eligible for special treatments or calculations, including re-pricing. Orders entered via RASH (short for ''routing and special handling'') and FIX are destined for the indirect entry into the matching engine. They are eligible for special treatments and calculations, including re-pricing. This difference in the protocols is longstanding and well-known to NASDAQ members.

[19] *See* Section VIII of the Plan.

[20] 15 U.S.C. 78f (b).

[21] 15 U.S.C. 78f(b)(5).

III. Date of Effectiveness of the Proposed Rule Change and Timing for Commission Action

The Exchange has filed the proposed rule change pursuant to Section 19(b)(3)(A)(iii) of the Act [22] and Rule 19b–4(f)(6) thereunder.[23] Because the proposed rule change does not: (i) Significantly affect the protection of investors or the public interest; (ii) impose any significant burden on competition; and (iii) become operative prior to 30 days from the date on which it was filed, or such shorter time as the Commission may designate, if consistent with the protection of investors and the public interest, the proposed rule change has become effective pursuant to Section 19(b)(3)(A) of the Act and Rule 19b–4(f)(6)(iii) thereunder.

A proposed rule change filed under Rule 19b–4(f)(6) [24] normally does not become operative prior to 30 days after the date of the filing. However, pursuant to Rule 19b4(f)(6)(iii),[25] the Commission may designate a shorter time if such action is consistent with the protection of investors and the public interest. The Exchange has asked the Commission to designate an operative date of April 8, 2013. The Commission believes that waiving the operative delay and designating April 8, 2013 as the operative date of the proposed rule change is consistent with the protection of investors and the public interest because such waiver would allow the proposed rule change to be operative on the initial date of Plan operations. Accordingly, the Commission hereby grants the Exchange's request and designates an operative date of April 8, 2013.[26]

At any time within 60 days of the filing of such proposed rule change, the Commission summarily may temporarily suspend such rule change if it appears to the Commission that such action is necessary or appropriate in the public interest, for the protection of investors, or otherwise in furtherance of the purposes of the Act.

[22] 15 U.S.C. 78s(b)(3)(A)(iii).

[23] 17 CFR 240.19b–4(f)(6). In addition, Rule 19b–4(f)(6) requires the Exchange to give the Commission written notice of the Exchange's intent to file the proposed rule change, along with a brief description and text of the proposed rule change, at least five business days prior to the date of filing of the proposed rule change, or such shorter time as designated by the Commission. The Exchange has satisfied this requirement.

[24] 17 CFR 240.19b–4(f)(6).

[25] 17 CFR 240.19b–4(f)(6)(iii).

[26] For purposes only of waiving the operative delay, the Commission has considered the proposed rule's impact on efficiency, competition, and capital formation. *See* 15 U.S.C. 78c(f).

IV. Solicitation of Comments

Interested persons are invited to submit written data, views, and arguments concerning the foregoing, including whether the proposed rule change is consistent with the Act. Comments may be submitted by any of the following methods:

Electronic Comments

- Use the Commission's Internet comment form (*http://www.sec.gov/rules/sro.shtml*); or
- Send an email to *rule-comments@sec.gov.* Please include File Number SR–Phlx–2013–26 on the subject line.

Paper Comments

- Send paper comments in triplicate to Elizabeth M. Murphy, Secretary, Securities and Exchange Commission, 100 F Street NE., Washington, DC 20549–1090.

All submissions should refer to File Number SR–Phlx–2013–26. This file number should be included on the subject line if email is used. To help the Commission process and review your comments more efficiently, please use only one method. The Commission will post all comments on the Commission's Internet Web site (*http://www.sec.gov/rules/sro.shtml*). Copies of the submission, all subsequent amendments, all written statements with respect to the proposed rule change that are filed with the Commission, and all written communications relating to the proposed rule change between the Commission and any person, other than those that may be withheld from the public in accordance with the provisions of 5 U.S.C. 552, will be available for Web site viewing and printing in the Commission's Public Reference Room, 100 F Street NE., Washington, DC 20549, on official business days between the hours of 10:00 a.m. and 3:00 p.m. Copies of such filing also will be available for inspection and copying at the principal office of the Exchange. All comments received will be posted without change; the Commission does not edit personal identifying information from submissions. You should submit only information that you wish to make publicly available. All submissions should refer to File Number SR–Phlx–2013–26 and should be submitted on or before April 18, 2013.

For the Commission, by the Division of Trading and Markets, pursuant to delegated authority. [27]

Kevin M. O'Neill,

Deputy Secretary.

[FR Doc. 2013–07183 Filed 3–27–13; 8:45 am]

BILLING CODE 8011–01–P

SECURITIES AND EXCHANGE COMMISSION

[Release No. 34–69213; File No. SR–NSX–2013–11]

Self-Regulatory Organizations; National Stock Exchange, Inc.; Notice of Filing and Immediate Effectiveness of Proposed Rule Change To Amend Its Fee and Rebate Schedule

March 22, 2013.

Pursuant to Section 19(b)(1) of the Securities Exchange Act of 1934 (the ''Act '' or ''Exchange Act'') [1] and Rule 19b–4 thereunder,[2] notice is hereby given that on March 13, 2013, National Stock Exchange, Inc. (''NSX®'' or ''Exchange'') filed with the Securities and Exchange Commission (''SEC'' or ''Commission'') the proposed rule change, as described in Items I, II, and III below, which Items have been prepared by the Exchange. The Commission is publishing this notice to solicit comment on the proposed rule change from interested persons.

I. Self-Regulatory Organization's Statement of the Terms of Substance of the Proposed Rule Change

The Exchange is proposing to amend its Fee and Rebate Schedule (the ''Fee Schedule'') issued pursuant to Exchange Rule 16.1(a) to provide Equity Trading Permit (''ETP'') [3] Holders the choice between two pricing options which can be applied to their use of the Exchange's Order Delivery mode (''Order Delivery Mode'').

The text of the proposed rule change is available on the Exchange's Web site at *www.nsx.com,* at the Exchange's principal office, and at the Commission's Public Reference Room.

II. Self-Regulatory Organization's Statement of the Purpose of, and Statutory Basis for, the Proposed Rule Change

In its filing with the Commission, the Exchange included statements concerning the purpose of, and basis for,

[27] 17 CFR 200.30–3(a)(12).

[1] 15 U.S.C. 78s(b)(1).

[2] 17 CFR 240.19b–4.

[3] Exchange Rule 1.5 defines the term ''ETP'' as an Equity Trading Permit issued by the Exchange for effecting approved securities transactions on the Exchange's Trading Facilities.

the proposed rule change and discussed any comments it received on the proposed rule change. The text of these statements may be examined at the places specified in Item IV below. The Exchange has prepared summaries, set forth in sections A, B, and C below, of the most significant parts of such statements.

A. Self-Regulatory Organization's Statement of the Purpose of, and Statutory Basis for, the Proposed Rule Change

1. Purpose

The Exchange proposes to amend its Fee Schedule to provide ETP Holders the choice between two pricing options which can be applied to their use of the Exchange's Order Delivery Mode. As explained in more detail below, the Exchange proposes to allow Order Delivery participants (''Order Delivery Participants'') the choice between two pricing options, ''A'' and ''B'' under Section II of the Fee Schedule for their use of Order Delivery Mode. ''Pricing Option A'' would consist of the Exchange's current fee structure for Order Delivery Mode, which is comprised of transaction-based rebates, an Order Deliver Notification Fee, and a Quotation Update Fee. Under ''Pricing Option B,'' Order Delivery Participants would not be subject to either the Order Delivery Notification Fee or Quotation Update Fee; however, they will not be eligible to receive any transaction-based rebates or market data rebates (''MDR'') under Section II of the Fee Schedule. Under both pricing options, new Order Delivery Participants would continue to be subject to the one-time $5,000 onboarding fee.

ETP Holders are to elect Pricing Option A or B by sending an email indicating their preference to *NSXTrading@NSX.com* prior to the first trading day of the calendar month. New Order Delivery Participants must email *NSXTrading@NSX.com* prior to the end of the first month they commence trading.

Pricing Option A

Currently, under Section II of the Fee Schedule, Order Delivery Participants are eligible to receive two rebates for transaction s executed in securities priced above $1.00: (i) a $0.0030 per share rebate; and (2) a 50% MDR.[4] ETP Holders using Order Delivery Mode are also subject to two fixed fees: (1) an Order Delivery Notification Fee of $0.35 per Order Delivery Notification,[5] which is capped at 1.5 million Order Delivery Notifications per month; and (2) a Quotation Update Fee for each quotation update[6] transmitted to the Exchange by the ETP Holder using Order Delivery Mode. The Quotation Update Fee is: (1) $0.000467 per quotation update for existing Order Delivery Participants; and (ii) $0.000667 per quotation update for new Order Delivery Participants during the first three (3) months of participation. The Quotation Update Fee is capped to the first 150 million quotation updates entered by each Order Delivery Participant per month. Order Delivery Participants that select Pricing Option A would continue to receive the $0.0030 per share rebate and a 50% MDR for transactions executed in securities priced at $1.00 or above and be charged both the Order Delivery Notification Fee and Quotation Update Fee. Revenue obtained from the Quotation Update Fee will continue to be earmarked to support the regulatory oversight of Order Delivery Mode.

Lastly, under Pricing Option A, the Exchange proposes to include the word ''Transaction'' in the title of the rebate to clearly distinguish the transaction-based rebate from the MDR rebate.

Pricing Option B

Under proposed Pricing Option B, Order Delivery Participants would not be subject to either the Order Delivery Notification Fee or Quotation Update Fee; however, they will also not be eligible to receive the $0.0030 per share rebate and a 50% MDR for all transactions executed by Order Delivery Participants in securities priced at $1.00 or above. Not providing transaction-based and MDR rebates is designed to allow the Exchange to recoup the expense of supporting the regulatory oversight of Order Delivery Mode as well as the development and ongoing operational costs that are otherwise covered by the Order Delivery Notification Fee and Quotation Update Fee.

Rationale and Background

The Exchange's Order Delivery Mode provides Electronic Communication Networks (''ECNs'') with an electronic trading platform to interact with the National Market System. Order Delivery Mode provides ECNs with the ability to (i) publish quotations into the consolidated quotation system, (ii) receive ''protected quotation'' status under Rule 611 of Regulation NMS,[7] (iii) receive an Order Delivery Notification when there is a potential match against a published quotation, and (iv) distribute attributed quotations through the Exchange's Depth-of-Book market data product.[8]

The Exchange amended its Fee Schedule on November 2, 2012 to adopt the Quotation Update Fee[9] and on December 3, 2012 to adopt the Order Delivery Notification Fee for Order Delivery Participants.[10] When adopting the Order Delivery Notification Fee, the Exchange also increased the rebate to its current level at $0.0030 per share for securities quoted at a price of $1.00 or greater, and provided Order Delivery Participants with 50% of the attributable MDR received by the Exchange as a means to increase the liquidity posted to the Exchange.

The Order Delivery Notification is designed to recover Order Delivery Mode's development and ongoing operational costs, while all revenue raised through the Quotation Update Fee is earmarked to support its regulatory oversight. At the time it adopted these fees, the Exchange experienced a disproportionate trade-to-quote ratio in Order Delivery Mode which resulted from ECNs successfully leveraging the Exchange's infrastructure to develop their businesses away from the Exchange, even as the majority of the Exchange's operational costs were fixed. Consequently, the Exchange believed that relying on transaction-

[4] The Exchange does not provide ETP Holders with a rebate for transactions executed using Order Delivery Mode for securities quoted at prices less than $1.00. *See* Securities Exchange Act Release No. 68391 (December 10, 2012), 77 FR 74536 (December 14, 2012) (SR–NSX–2012–25).

[5] An Order Delivery Notification refers to a message sent by the Exchange to the Order Delivery participant communicating the details of the full or partial quantity of an inbound contra-side order that potentially may be matched within the System for execution against an Order Delivery Order.

[6] A ''quotation update'' includes any change to the price, size or side of a quotation or submission of an updated quote with the same price, size or side. A quotation update does not include posting of a new quote to replace a quote that was fully executed.

[7] 17 CFR 611.

[8] ECNs can also use Order Delivery Mode to fulfill certain regulatory obligations such as qualifying as an ECN Display Alternative (17 CFR 242.602(b)(5)(i)) or publishing quotations in the consolidated quotation system when the five (5) percent order display requirement is triggered (17 CFR 242.301(b)(3)(B)).

[9] *See* Securities Exchange Act Release No. 68215 (November 13, 2012), 77 FR 69522 (November 19, 2012) (SR–NSX–2012–20) (adopting the Quotation Update Fee). *See also* Securities Exchange Act Release No. 68392 (December 10, 2012), 77 FR 74533 (December 14, 2012) (SR–NSX–2012–24) (amending the Quotation Update Fee).

[10] *See* Securities Exchange Act Release No. 68391 (December 10, 2012), 77 FR 74536 (December 14, 2012) (SR–NSX–2012–25) (adopting the Order Delivery Notification Fee); *see also* Securities Exchange Act Release No. 68612 (January 9, 2013), 78 FR 3058 (January 15, 2013) (SR–NSX–2012–27) (amending the Order Delivery Notification Fee).

based revenues to support Order Delivery Mode was not feasible and moved to the current pricing structure as a means to charge for the actual services provided by Order Delivery Mode.

The Exchange has continued to reassess its Fee Schedule for Order Delivery Mode and considered adjusting its fees and rebates to remain competitive with other exchanges. Also, since the adoption of the Order Delivery Notification Fee and Quotation Update Fee, certain Order Delivery Participants have altered their activity in Order Delivery Mode in order to minimize the amount of fees paid to the Exchange. Therefore, the Exchange proposes to allow Order Delivery Participants the choice between two pricing options, ''A'' and ''B'' under Section II of the Fee Schedule for their use of Order Delivery Mode.

The Exchange believes the availability of Pricing Option B would allow Order Delivery Participants with lower trading volumes and lower rebate or fee driven models to increase their activity on the Exchange. By not providing transaction-based and MDR rebates, the Exchange believes it will recoup the expense of supporting its regulatory programs and operation. Specifically, under Section I of the Fee Schedule, the Exchange currently charges ETP Holders that enter orders via the Exchange's automatic execution mode of interaction (''Auto-Ex Mode'') [11] a per share fee for orders that remove liquidity. The Exchange, in turn, shares that fee in the form of a rebate with the ETP Holder that posted the contra-side order to the NSX Book (including those that execute against an order posted via Order Delivery Mode). Where an Order Delivery Participant elected Pricing Option B, the Exchange will retain the entire fee it collected under Section I of the Fee Schedule and not rebate a portion of it to the Order Delivery Participant. The Exchange will also retain all the attributable MDR received on that transaction. The Exchange believes the retention of these fees and MDR will continue to allow it to recoup the cost of regulating, operating and maintaining Order Delivery Mode.

The Exchange anticipates the availability of Pricing Option B will encourage ETP Holders considering whether to offer a ''lit'' ECN to participate in Order Delivery Mode while encouraging existing Order Delivery Participants to increase their execution rates on the Exchange by not being subject to the Order Delivery Notification Fee and Quotation Update Fee. The Exchange will continue to earmark the fees and MDR it collects from executions against orders posted via Order Delivery Mode to support the regulatory oversight of Order Delivery Mode.

The Exchange anticipates that Order Delivery Participants with higher trading volumes or rebate driven business models would continue to operate under the current pricing structure, which is available under Pricing Option A, because they are able to exceed the cap limits of both the Order Delivery Notification and Quotation Update Fee. Revenue obtained from the Quotation Update Fee will also continue to be earmarked to support the regulatory oversight of Order Delivery Mode.

Operative Date and Notice

The Exchange will make the proposed modifications, which are effective on filing of this proposed rule, operative as of commencement of trading on March 15, 2013. Pursuant to Exchange Rule 16.1(c), the Exchange will ''provide ETP Holders with notice of all relevant dues, fees, assessments and charges of the Exchange'' through the issuance of an Information Circular of the changes to the Fee Schedule and will post a copy of the rule filing on the Exchange's Web site (*www.nsx.com*).

2. Statutory Basis

The Exchange believes that the amended Order Delivery Notification Fee for Order Delivery participants is consistent with the provisions of Section 6(b) of the Securities Exchange Act of 1934 (the ''Act''),[12] in general, and furthers the objectives of Section 6(b)(4) of the Act,[13] in particular, because it provides for the equitable allocation of reasonable dues, fees and other charges among its ETP Holders and other persons using the facilities of the Exchange.

The Exchange believes providing Order Delivery Participants the choice between two pricing options is reasonable and will allow Order Delivery Participants to select a pricing structure that is appropriate to its business model. For example, the Exchange believes Pricing Option B will encourage ETP Holders, considering whether to offer a ''lit'' ECN, to participate in Order Delivery Mode while also encouraging existing Order Delivery Participants to increase their execution rates on the Exchange by not being subject to the Order Delivery Notification and Quotation Update Fees. The Exchange will continue to earmark the fees and MDR it collects from transactions against orders posted via Order Delivery Mode to support the regulatory oversight of Order Delivery Mode as well as its development and ongoing operational expenses. The Exchange also anticipates that Order Delivery Participants with higher trading volumes or high rebate business models would continue to operate under the current pricing structure, which is available under Pricing Option A, because they are able to exceed the cap for both the Order Delivery Notification and Quotation Update Fee or due to their rebate sensitive business model. Once they exceed these caps, these Order Delivery Participants will share in the transaction and MDR rebates without being subject to the Order Delivery Notification and Quotation Update Fees. Furthermore, the Exchange believes providing the choice between two pricing options is not unfairly discriminatory because it will allow Order Delivery Participants to select a pricing structure that is appropriate to its business model.

Finally, the Exchange notes that it operates in a highly competitive market in which market participants can readily favor competing venues. In such an environment, the Exchange must continually review, and consider adjusting, its fees and rebates to remain competitive with other exchanges. For the reasons described above, the Exchange believes that the proposed rule change reflects this competitive environment.

B. Self-Regulatory Organization's Statement on Burden on Competition

The Exchange does not believe that the proposed rule change will impose any burden on competition that is not necessary or appropriate in furtherance of the purposes of the Act. The Exchange believes providing Order Delivery Participants the choice between two pricing options is reasonable because it will allow Order Delivery Participants to select a pricing structure that is appropriate to its business model. The Exchange anticipates the availability of Pricing Option B will enhance competition by encouraging ETP Holders who are considering whether to offer a ''lit'' ECN to participate in Order Delivery Mode while encouraging existing Order Delivery Participants to increase their execution rates on the Exchange by not being subject to the Order Delivery and

[11] Under Auto-Ex Mode, the Exchange matches and executes like-priced orders (including against Order Delivery orders resting on the NSX book). Auto-Ex orders resting in the NSX book execute immediately when matched against a marketable incoming contra-side Auto-Ex order.

[12] 15 U.S.C. 78f(b).

[13] 15 U.S.C. 78f(b)(4).

Quotation Update fees. Therefore, the Exchange does not believe the modified Order Delivery Notification Fee imposes any burden on completion that is not necessary or appropriate in furtherance of the Act.

C. Self-Regulatory Organization's Statement on Comments on the Proposed Rule Change Received From Members, Participants, or Others

The Exchange has neither solicited nor received written comments on the proposed rule change.

III. Date of Effectiveness of the Proposed Rule Change and Timing for Commission Action

The proposed rule change has taken effect upon filing pursuant to Section 19(b)(3)(A)(ii) of the Exchange Act [14] and subparagraph (f)(2) of Rule 19b–4.[15] At any time within 60 days of the filing of such proposed rule change, the Commission summarily may temporarily suspend such rule change if it appears to the Commission that such action is necessary or appropriate in the public interest, for the protection of investors, or otherwise in furtherance of the purposes of the Act.

IV. Solicitation of Comments

Interested persons are invited to submit written data, views, and arguments concerning the foregoing, including whether the proposed rule change is consistent with the Act. Comments may be submitted by any of the following methods:

Electronic Comments

- Use the Commission's Internet comment form (*http://www.sec.gov/rules/sro.shtml*); or
- Send an email to *rule-comments@sec.gov.* Please include File Number SR–NSX–2013–11 on the subject line.

Paper Comments

- Send paper comments in triplicate to Elizabeth M. Murphy, Secretary, Securities and Exchange Commission, 100 F Street NE., Washington, DC 20549–1090.

All submissions should refer to File Number SR–NSX–2013–11. This file number should be included on the subject line if email is used. To help the Commission process and review your comments more efficiently, please use only one method. The Commission will post all comments on the Commission's Internet Web site (*http://www.sec.gov/rules/sro.shtml*). Copies of the submission, all subsequent amendments, all written statements with respect to the proposed rule change that are filed with the Commission, and all written communications relating to the proposed rule change between the Commission and any person, other than those that may be withheld from the public in accordance with the provisions of 5 U.S.C. 552, will be available for Web site viewing and printing in the Commission's Public Reference Room on official business days between the hours of 10:00 a.m. and 3:00 p.m. Copies of such filing also will be available for inspection and copying at the principal offices of the Exchange. All comments received will be posted without change; the Commission does not edit personal identifying information from submissions. You should submit only information that you wish to make available publicly. All submissions should refer to File Number SR–NSX–2013–11, and should be submitted on or before April 18, 2013.

For the Commission, by the Division of Trading and Markets, pursuant to delegated authority.[16]

Kevin M. O'Neill,

Deputy Secretary.

[FR Doc. 2013–07182 Filed 3–27–13; 8:45 am]

BILLING CODE 8011–01–P

[14] 15 U.S.C. 78s(b)(3)(A)(ii).

[15] 17 CFR 240.19b–4.

[16] 17 CFR 200.30–3(a)(12).

SECURITIES AND EXCHANGE COMMISSION

[Release No. 34–69217; File No. SR–NASDAQ–2013–045]

Self-Regulatory Organizations; The NASDAQ Stock Market LLC; Notice of Filing and Immediate Effectiveness of Proposed Rule Change To Amend Exchange Rule 4120

March 22, 2013.

Pursuant to Section 19(b)(1) of the Securities Exchange Act of 1934 (''Act''),[1] and Rule 19b–4 thereunder,[2] notice is hereby given that on March 11, 2013, The NASDAQ Stock Market LLC (''NASDAQ'' or ''Exchange''), filed with the Securities and Exchange Commission (''Commission'') the proposed rule change as described in Items I and II below, which Items have been prepared by the Exchange. The Commission is publishing this notice to solicit comments on the proposed rule change from interested persons.

I. Self-Regulatory Organization's Statement of the Terms of Substance of the Proposed Rule Change

NASDAQ proposes to amend Exchange Rule 4120 to establish rules to comply with the requirements of the Plan to Address Extraordinary Market Volatility submitted to the Commission pursuant to Rule 608 of Regulation NMS.

The text of the proposed rule change is available on the Exchange's Web site at *http://www.nasdaq.cchwallstreet.com,* at the principal office of the Exchange, at the Commission's Public Reference Room, and on the Commission's Web site at *http://www.sec.gov*.

II. Self-Regulatory Organization's Statement of the Purpose of, and Statutory Basis for, the Proposed Rule Change

In its filing with the Commission, the Exchange included statements concerning the purpose of and basis for the proposed rule change and discussed any comments it received on the proposed rule change. The text of these statements may be examined at the places specified in Item IV below. The Exchange has prepared summaries, set forth in Sections A, B, and C below, of the most significant aspects of such statements.

A. Self-Regulatory Organization's Statement of the Purpose of, and Statutory Basis for, the Proposed Rule Change

1. Purpose

The Exchange proposes to amend Exchange Rule 4120 to establish rules to comply with the requirements of the Plan to Address Extraordinary Market Volatility submitted to the Commission pursuant to Rule 608 of Regulation NMS under the Act (the ''Plan''). The Exchange proposes to adopt the changes for a pilot period that coincides with the pilot period for the Plan, which is currently scheduled as a one-year pilot to begin on April 8, 2013.[3]

Background

Since May 6, 2010, when the markets experienced excessive volatility in an abbreviated time period, *i.e.,* the ''flash crash,'' the equities exchanges and FINRA have implemented market-wide measures designed to restore investor confidence by reducing the potential for excessive market volatility. Among the

[1] 15 U.S.C. 78s(b)(1).

[2] 17 CFR 240.19b–4.

[3] *See* Securities Exchange Act Release No. 68953 (Feb. 20, 2013) (Notice of Filing and Immediate Effectiveness of the Second Amendment to the National Market System Plan to Address Extraordinary Market Volatility, File No. 4–631).

measures adopted include pilot plans for stock-by-stock trading pauses[4] and related changes to the equities market clearly erroneous execution rules[5] and more stringent equities market maker quoting requirements.[6] On May 31, 2012, the Commission approved the Plan, as amended, on a one-year pilot basis.[7] In addition, the Commission approved changes to the equities market-wide circuit breaker rules on a pilot basis to coincide with the pilot period for the Plan.[8]

The Plan is designed to prevent trades in individual NMS Stocks from occurring outside of specified Price Bands.[9] As described more fully below, the requirements of the Plan are coupled with Trading Pauses to accommodate more fundamental price moves (as opposed to erroneous trades or momentary gaps in liquidity). All trading centers in NMS Stocks, including both those operated by Participants and those operated by members of Participants, are required to establish, maintain, and enforce written policies and procedures that are reasonably designed to comply with the requirements specified in the Plan.[10] As set forth in more detail in the Plan, Price Bands consisting of a Lower Price Band and an Upper Price Band for each NMS Stock are calculated by the Processors.[11] When the National Best Bid (Offer) is below (above) the Lower (Upper) Price Band, the Processors shall disseminate such National Best Bid (Offer) with an appropriate flag identifying it as non-executable. When the National Best Bid (Offer) is equal to the Upper (Lower) Price Band, the Processors shall distribute such National Best Bid (Offer) with an appropriate flag identifying it as a Limit State Quotation.[12] All trading centers in NMS Stocks must maintain written policies and procedures that are reasonably designed to prevent the display of offers below the Lower Price Band and bids above the Upper Price Band for NMS Stocks. Notwithstanding this requirement, the Processor shall display an offer below the Lower Price Band or a bid above the Upper Price Band, but with a flag that it is non-executable. Such bids or offers shall not be included in the National Best Bid or National Best Offer calculations.[13]

Trading in an NMS Stock immediately enters a Limit State if the National Best Offer (Bid) equals but does not cross the Lower (Upper) Price Band.[14] Trading for an NMS stock exits a Limit State if, within 15 seconds of entering the Limit State, all Limit State Quotations were executed or canceled in their entirety. If the market does not exit a Limit State within 15 seconds, then the Primary Listing Exchange would declare a five-minute Trading Pause pursuant to Section VII of the LULD Plan, which would be applicable to all markets trading the security.[15] In addition, the Plan defines a Straddle State as when the National Best Bid (Offer) is below (above) the Lower (Upper) Price Band and the NMS Stock is not in a Limit State. For example, assume the Lower Price Band for an NMS Stock is $9.50 and the Upper Price Band is $10.50, such NMS stock would be in a Straddle State if the National Best Bid were below $9.50, and therefore non-executable, and the National Best Offer were above $9.50 (including a National Best Offer that could be above $10.50). If an NMS Stock is in a Straddle State and trading in that stock deviates from normal trading characteristics, the Primary Listing Exchange may declare a Trading Pause for that NMS Stock.

Proposed Amendment to Rule 4120

The Exchange is required by the Plan to establish, maintain, and enforce written policies and procedures that are reasonably designed to comply with the limit up-limit down and trading pause requirements specified in the Plan. In response to the new Plan, the Exchange proposes to amend its Rules accordingly.

The Exchange proposes to add Rule 4120(a)(12)(A)(1) to define that ''Plan'' means the Plan to Address Extraordinary Market Volatility Submitted to the Securities and Exchange Commission Pursuant to Rule 608 of Regulation NMS under the Securities Exchange Act of 1934, Exhibit A to Securities Exchange Act Release No. 67091 (May 31, 2012), 77 FR 33498 (June 6, 2012). In addition, proposed Rule 4120(a)(12)(A)(2) provides that all capitalized terms not otherwise defined in this Rule shall have the meanings set forth in the Plan or Exchange rules, as applicable.

The Exchange proposes to add Rule 4120(a)(12)(C) to provide that Exchange members shall comply with the applicable provisions of the Plan. The Exchange believes that this requirement will help ensure the compliance by its members with the provisions of the Plan as required pursuant to Section II(B) of the Plan.[16]

The Exchange proposes to add Rule 4120(a)(12)(D) to provide that Exchange systems shall not display or execute buy (sell) interest above (below) the Upper (Lower) Price Bands, unless such interest is specifically exempted under the Plan. The Exchange believes that this requirement is reasonably designed to help ensure the compliance with the limit up-limit down and trading pause requirements specified in the Plan, by preventing executions outside the Price Bands as required pursuant to Section VI(A)(1) of the Plan.[17]

The Exchange proposes Rules regarding the treatment of certain trading interest on the Exchange in order to prevent executions outside the Price Bands and to comply with the new LULD Plan. In particular, the Exchange proposes to add Rule 4120(a)(12)(E) to provide that Exchange systems shall re-price or cancel buy (sell) interest that is priced or could be executed above (below) the Upper (Lower) Price Band. Any interest that is repriced pursuant to this Rule shall receive a new time stamp and new execution priority.[18] Specifically, the Exchange proposes the following provisions regarding the repricing or canceling of certain trading interest:

- *Market Orders.* If a market order with a time in force other than Immediate or Cancel cannot be fully executed at or within the Price Bands, Exchange systems shall post the unexecuted portion of the buy (sell) market order at the Upper (Lower) Price Band.

[4] *See, e.g.,* NASDAQ Rule 4120.

[5] *See, e.g.,* NASDAQ Rule 11890.

[6] *See, e.g.,* NASDAQ Rule 4613(a).

[7] *See* Securities Exchange Act Release No. 67091 (May 31, 2012), 77 FR 33498 (June 6, 2012) (File No. 4–631) (Order Approving, on a Pilot Basis, the National Market System Plan To Address Extraordinary Market Volatility).

[8] *See* Securities Exchange Act Release No. 67090 (May 31, 2012), 77 FR 33531 (June 6, 2012) (SR–BATS–2011–038; SR–BYX–2011–025; SR–BX–2011–068; SR–CBOE–2011–087; SR–C2–2011–024; SR–CHX–2011–30; SR–EDGA–2011–31; SR–EDGX–2011–30; SR–FINRA–2011–054; SR–ISE–2011–61; SR–NASDAQ–2011–131; SR–NSX–2011–11; SR–NYSE–2011–48; SR–NYSEAmex–2011–73; SR–NYSEArca–2011–68; SR–Phlx–2011–129).

[9] Unless otherwise specified, capitalized terms used in this rule filing are based on the defined terms of the Plan.

[10] The Exchange is a Participant in the Plan.

[11] *See* Section (V)(A) of the Plan.

[12] *See* Section VI(A) of the Plan.

[13] *See* Section VI(A)(3) of the Plan.

[14] *See* Section VI(B)(1) of the Plan.

[15] The primary listing market would declare a trading pause in an NMS Stock; upon notification by the primary listing market, the Processor would disseminate this information to the public. No trades in that NMS Stock could occur during the trading pause, but all bids and offers may be displayed. *See* Section VII(A) of the Plan.

[16] *See* Section II(B) of the Plan.

[17] *See* Section VI(A)(1) of the Plan.

[18] NASDAQ believes it is appropriate for re-priced orders to receive a new time stamp and new execution priority rather than jump ahead of previously-entered orders. In effect, an adjustment in price is equivalent to the entry of a new order; that function is simply being automated.

• *Limit-priced Interest.* Both displayable and non-displayable incoming limit-priced interest to buy (sell) that is priced above (below) the Upper (Lower) Price Band shall be repriced to the Upper (Lower) Price Band. The treatment of limit-priced interest will depend upon its order entry protocol. For limit-priced orders entered via the OUCH protocol, the order shall be re-priced upon entry only if the Price Bands are such that the price of the limit-priced interest to buy (sell) would be above (below) the upper (lower) Price Band. Once slid, the treatment of that interest will further depend upon whether it becomes passive or aggressive interest. Specifically, if the order becomes passively priced such that the Price Bands move and the price of the order to buy (sell) would be below (below) the lower (upper) Price Band, the order will not be re-priced again. Rather, the order will either remain on the book at the same price or be cancelled back to the entering party, depending on how the entering party has configured its order entry port. If the interest becomes aggressively priced such that the Price Bands move and the price of the order to buy (sell) would be above (below) the upper (lower) Price Band, the order will not be re-priced again. Rather, the order will be cancelled.

• For limit-priced orders entered via RASH or FIX protocols, the order shall priced upon order entry and then shall be eligible to be repriced by the system multiple times if the Price Bands move such that the price of resting limit-priced interest to buy (sell) would be above (below) the upper (lower) Price Band. Once slid, if the Price Bands move such that the price of resting limit interest to buy (sell) would be below (above) the upper (lower) Price Band the order will continue to be repriced either to its original limit price or to the new price bands, whichever is less aggressive.[19]

• *IOC Orders.* If an IOC order cannot be fully executed at or within the Price Bands, Exchange systems shall cancel any unexecuted portion of the IOC Order.

• *Routable Orders.* With the exception of Directed Orders, and orders submitted using either the DOTI or DOTZ routing strategy, the Exchange systems shall not route buy (sell) interest to an away market displaying a sell (buy) quote that is above (below) the Upper (Lower) Price Band. Orders that are eligible to be routed to away destinations will be price slid before routing if the buy (sell) is priced above (below) the Upper (Lower) Price Band.

• *Auction Orders.* On close or halt auction orders are not price slid or cancelled due to LULD price bands.

• *Sell Short Orders.* During a Short Sale Price Test, as defined in Rule 4763(b), Short Sale Orders priced below the Lower Price Band shall be repriced to the higher of the Lower Price Band or the Permitted Price, as defined in Rule 4763(b).

The Exchange believes these provisions are reasonably designed to prevent executions outside the Price Bands as required by the limit up-limit down and trading pause requirements specified in the Plan.

The Exchanges also proposes to amend the Rules regarding Trading Pauses to correspond with the LULD Plan. The Exchange proposes to provide that during Phase 1 of the Plan, a Trading Pause in Tier 1 NMS Stocks shall be subject to the requirements of the Plan and Exchange Rule 4753 and a Trading Pause in Tier 2 NMS Stocks shall be subject to the requirements set forth in Exchange 4120(a)(11). Once the Plan has been fully implemented and all NMS Stocks are subject to the Plan, a Trading Pause under the Plan shall be subject to Exchange Rule 4120(a)(12). Consistent with these changes, the Exchange proposes to delete the threshold requirement of 10% or more with respect to securities included in the S&P 500® Index and the Russell 1000® Index, because these Tier 1 NMS Stocks will be subject to the requirements under Exchange Rule 4120(a)(11). These proposed changes are designed to comply with Section VIII of the Plan to ensure implementation of the Plan's requirements.[20]

2. Statutory Basis

The Exchange believes the proposed rule change is consistent with Section 6(b) of the Act[21] in general, and furthers the objectives of Section 6(b)(5),[22] in particular, in that it is designed to promote just and equitable principles of trade, remove impediments to and perfect the mechanisms of a free and open market and a national market system and, in general, to protect investors and the public interest.

The proposal will ensure that the Exchange systems will not display or execute trading interest outside the Price Bands in a manner that promotes just and equitable principles of trade and removes impediments to, and perfects the mechanism of, a free and open market and a national market system.

The proposal will also ensure that the trading interest on the Exchange is either repriced or canceled in a manner that is consistent with just and equitable principles of trade and removes impediments to, and perfects the mechanism of, a free and open market and a national market system. Specifically, when trading interest is re-priced to comply with the requirements of the Plan, that trading interest will receive a new timestamp and new execution priority. Re-pricing is the automated equivalent of the entry of a new order which would, if done manually, result in a new timestamp and placement in the execution queue. The proposal will help market participants to continue to trade NMS Stocks within Price Bands in compliance with the Plan with certainty on how orders and trading interest will be treated. Reducing uncertainty regarding the treatment and priority of trading interest with the Price Bands should help encourage market participants to continue to provide liquidity during extraordinary market volatility.

The proposal will also ensure that orders in NMS Stocks are not routed to other exchanges in situations where an execution may occur outside Price Bands, and thus promotes just and equitable principles of trade and removes impediments to, and perfects the mechanism of, a free and open market and a national market system.

B. Self-Regulatory Organization's Statement on Burden on Competition

The Exchange does not believe that the proposed rule change will impose any burden on competition that is not necessary or appropriate in furtherance of the purposes of the Act. To the contrary, the proposal is specifically designed to ensure cooperation between and among all national securities exchanges and FINRA to promote uniform and effective regulation of the national market system. The proposal is specifically aimed at reducing competition among exchanges that is based on differences in regulations,

[19] The NASDAQ system will treat limit-priced orders differently depending upon whether the entering firm uses the OUCH protocol on one hand or the RASH or FIX protocols on the other. This different treatment stems from the ultimate destination for orders entered via those protocols. Orders entered via OUCH are destined for direct entry to the NASDAQ matching engine. As such, they are not eligible for special treatments or calculations, including re-pricing. Orders entered via RASH (short for ''routing and special handling'') and FIX are destined for the indirect entry into the matching engine. They are eligible for special treatments and calculations, including re-pricing. This difference in the protocols is longstanding and well-known to NASDAQ members.

[20] *See* Section VIII of the Plan.

[21] 15 U.S.C. 78f(b).

[22] 15 U.S.C. 78f(b)(5).

otherwise known as regulatory arbitrage. In actuality, the proposal is pro-competitive because it promotes fair and orderly markets and investor protection, which in turn will restore investor confidence and attract more investors into U.S. equities markets.

C. Self-Regulatory Organization's Statement on Comments on the Proposed Rule Change Received from Members, Participants, or Others

Written comments were neither solicited nor received.

III. Date of Effectiveness of the Proposed Rule Change and Timing for Commission Action

The Exchange has filed the proposed rule change pursuant to Section 19(b)(3)(A)(iii) of the Act [23] and Rule 19b–4(f)(6) thereunder.[24] Because the proposed rule change does not: (i) Significantly affect the protection of investors or the public interest; (ii) impose any significant burden on competition; and (iii) become operative prior to 30 days from the date on which it was filed, or such shorter time as the Commission may designate, if consistent with the protection of investors and the public interest, the proposed rule change has become effective pursuant to Section 19(b)(3)(A) of the Act and Rule 19b–4(f)(6)(iii) thereunder.

A proposed rule change filed under Rule 19b–4(f)(6) [25] normally does not become operative prior to 30 days after the date of the filing. However, pursuant to Rule 19b4(f)(6)(iii),[26] the Commission may designate a shorter time if such action is consistent with the protection of investors and the public interest. The Exchange has asked the Commission to designate an operative date of April 8, 2013. The Commission believes that waiving the operative delay and designating April 8, 2013 as the operative date of the proposed rule change is consistent with the protection of investors and the public interest because such waiver would allow the proposed rule change to be operative on the initial date of Plan operations. Accordingly, the Commission hereby grants the Exchange's request and designates an operative date of April 8, 2013.[27]

At any time within 60 days of the filing of such proposed rule change, the Commission summarily may temporarily suspend such rule change if it appears to the Commission that such action is necessary or appropriate in the public interest, for the protection of investors, or otherwise in furtherance of the purposes of the Act.

IV. Solicitation of Comments

Interested persons are invited to submit written data, views, and arguments concerning the foregoing, including whether the proposed rule change is consistent with the Act. Comments may be submitted by any of the following methods:

Electronic Comments

- Use the Commission's Internet comment form (*http://www.sec.gov/rules/sro.shtml*); or
- Send an email to *rule-comments@sec.gov*. Please include File Number SR–NASDAQ–2013–045 on the subject line.

Paper Comments

- Send paper comments in triplicate to Elizabeth M. Murphy, Secretary, Securities and Exchange Commission, 100 F Street NE., Washington, DC 20549–1090.

All submissions should refer to File Number SR–NASDAQ–2013–045. This file number should be included on the subject line if email is used. To help the Commission process and review your comments more efficiently, please use only one method. The Commission will post all comments on the Commission's Internet Web site (*http://www.sec.gov/rules/sro.shtml*). Copies of the submission, all subsequent amendments, all written statements with respect to the proposed rule change that are filed with the Commission, and all written communications relating to the proposed rule change between the Commission and any person, other than those that may be withheld from the public in accordance with the provisions of 5 U.S.C. 552, will be available for Web site viewing and printing in the Commission's Public Reference Room, 100 F Street NE., Washington, DC 20549, on official business days between the hours of 10:00 a.m. and 3:00 p.m. Copies of such filing also will be available for inspection and copying at the principal office of the Exchange. All comments received will be posted without change; the Commission does not edit personal identifying information from submissions. You should submit only information that you wish to make publicly available. All submissions should refer to File Number SR–NASDAQ–2013–045 and should be submitted on or before April 18, 2013.

For the Commission, by the Division of Trading and Markets, pursuant to delegated authority. [28]

Kevin M. O'Neill,

Deputy Secretary.

[FR Doc. 2013–07184 Filed 3–27–13; 8:45 am]

BILLING CODE 8011–01–P

[23] 15 U.S.C. 78s(b)(3)(A)(iii).

[24] 17 CFR 240.19b–4(f)(6). In addition, Rule 19b–4(f)(6) requires the Exchange to give the Commission written notice of the Exchange's intent to file the proposed rule change, along with a brief description and text of the proposed rule change, at least five business days prior to the date of filing of the proposed rule change, or such shorter time as designated by the Commission. The Exchange has satisfied this requirement.

[25] 17 CFR 240.19b–4(f)(6).

[26] 17 CFR 240.19b–4(f)(6)(iii).

[27] For purposes only of waiving the operative delay, the Commission has considered the proposed rule's impact on efficiency, competition, and capital formation. *See* 15 U.S.C. 78c(f).

[28] 17 CFR 200.30–3(a)(12).

SECURITIES AND EXCHANGE COMMISSION

[Release No. 34–69216; File No. SR–NASDAQ–2012–090]

Self-Regulatory Organizations; The NASDAQ Stock Market LLC; Order Granting Approval of a Proposed Rule Change To Amend Rule 4626—Limitation of Liability

March 22, 2013.

I. Introduction

On July 23, 2012, The NASDAQ Stock Market LLC (''Nasdaq'' or ''Exchange'') filed with the Securities and Exchange Commission (''Commission''), pursuant to Section 19(b)(1) of the Securities Exchange Act of 1934 (''Act'') [1] and Rule 19b–4 thereunder,[2] a proposed rule change to amend Exchange Rule 4626—Limitation of Liability (''accommodation proposal''). The proposed rule change was published for comment in the **Federal Register** on August 1, 2012.[3] The Commission received 11 comment letters on the accommodation proposal [4]

[1] 15 U.S.C. 78s(b)(1).

[2] 17 CFR 240.19b–4.

[3] *See* Securities Exchange Act Release No. 67507 (July 26, 2012), 77 FR 45706 (August 1, 2012) (''Notice'').

[4] *See* letters to Elizabeth M. Murphy, Secretary, Commission, from Sis DeMarco, Chief Compliance Officer, Triad Securities Corp., dated August 20, 2012 (''Triad Letter''); Eugene P. Torpey, Chief Compliance Officer, Vandham Securities Corp., dated August 21, 2012 (''Vandham Letter''); John C. Nagel, Managing Director and General Counsel, Citadel LLC, dated August 21, 2012 (''Citadel Letter''); Benjamin Bram, Watermill Institutional Trading LLC, dated August 22, 2012 (''Bram Letter''); Daniel Keegan, Managing Director, Citigroup Global Markets Inc., dated August 22, 2012 (''Citi Letter''); Theodore R. Lazo, Managing Director and Associate General Counsel, Securities Industry and Financial Markets Association, dated August 22, 2012 (''SIFMA Letter I''); Mark Shelton, Group Managing Director and General Counsel, UBS Securities LLC, dated August 22, 2012 (''UBS

and a response letter from Nasdaq.[5] On September 12, 2012, the Commission extended the time period for Commission action to October 30, 2012.[6] On October 26, 2012, the Commission instituted proceedings to determine whether to approve or disapprove the accommodation proposal.[7] The Commission then received six additional comment letters on the proposal [8] and a second response letter from Nasdaq.[9] On January 23, 2013, the Commission extended the time period for Commission action to March 29, 2013.[10] This order approves the proposed rule change.

II. Description of Proposal

Pursuant to existing Nasdaq Rule 4626(a), Nasdaq and its affiliates are not liable for any losses, damages, or other claims arising out of the Nasdaq Market Center or its use.[11] However, existing Nasdaq Rule 4626(b) allows Nasdaq to compensate users of the Nasdaq Market Center for losses directly resulting from the systems' actual failure to correctly process an order, Quote/Order, message, or other data, provided the Nasdaq Market Center has acknowledged receipt of the order, Quote/Order, message, or data. Nasdaq's payment for all claims made by all market participants related to the use of the Nasdaq Market Center during a single calendar month shall not exceed the larger of $500,000 or the amount of the recovery obtained by Nasdaq under any applicable insurance policy.[12]

Nasdaq proposes to add subsection (3) to Nasdaq Rule 4626(b) to establish a voluntary accommodation program for certain claims arising from the initial public offering (''IPO'') of Facebook, Inc. (''Facebook'') on May 18, 2012 (collectively ''Facebook IPO'').[13] Specifically, Nasdaq proposes to compensate market participants for certain claims related to system difficulties in the Nasdaq Halt and Imbalance Cross process (''Cross'') [14] in connection with the Facebook IPO in an amount not to exceed $62 million.[15] Further, as proposed by Nasdaq, claims for compensation must arise solely from realized or unrealized direct trading losses from four specific categories of Cross orders: (i) Sell Cross orders that were submitted between 11:11 a.m. ET and 11:30 a.m. ET on May 18, 2012, that were priced at $42.00 or less, and that did not execute; (ii) sell Cross orders that were submitted between 11:11 a.m. ET and 11:30 a.m. ET on May 18, 2012, that were priced at $42.00 or less, and that executed at a price below $42.00; (iii) buy Cross orders priced at exactly $42.00 and that were executed in the Cross, but not immediately confirmed; and (iv) buy Cross orders priced above $42.00 and that were executed in the Cross, but not immediately confirmed, but only to the extent entered with respect to a customer [16] that was permitted by the member to cancel its order prior to 1:50 p.m. and for which a request to cancel the order was submitted to Nasdaq by the member, also prior to 1:50 p.m.[17]

According to proposed Nasdaq Rule 4626(b)(3)(B), the measure of loss for the Cross orders described in (i), (iii), and (iv) above would be the lesser of: (a) the differential between the expected execution price of the orders in the Cross process that established an opening print of $42.00 and the actual execution price received; or (b) the differential between the expected execution price of the orders in the Cross process that established an opening print of $42.00 and a benchmark price of $40.527.[18] With respect to Cross orders described in (iv) above, the amount of loss would be reduced by 30 percent.[19] Further,

Letter I''); Andrew J. Entwistle and Vincent R. Cappucci, Entwistle & Cappucci LLP, dated August 22, 2012 (''Entwistle Letter''); Douglas G. Thompson, Michael G. McLellan, and Robert O. Wilson, Finkelstein Thompson LLP, Christopher Lovell, Victor E. Stewart, and Fred T. Isquith, Lovell Stewart Halebian Jacobson LLP, Jacob H. Zamansky and Edward H. Glenn, Zamansky & Associates LLC, dated August 22, 2012 (''Thompson Letter I''); James J. Angel, Associate Professor of Finance, Georgetown University, McDonough School of Business, dated August 23, 2012 (''Angel Letter''); and Leonard J. Amoruso, General Counsel, Knight Capital Group, Inc., dated August 29, 2012 (''Knight Letter'').

[5] *See* letter to Elizabeth M. Murphy, Secretary, Commission, from Joan C. Conley, Senior Vice President and Corporate Secretary, Nasdaq, dated September 17, 2012 (''Nasdaq Letter I'').

[6] *See* Securities Exchange Act Release No. 67842 (September 12, 2012), 77 FR 57171 (September 17, 2012).

[7] *See* Securities Exchange Act Release No. 68115 (October 26, 2012), 77 FR 66197 (November 2, 2012).

[8] *See* letters to Elizabeth M. Murphy, Secretary, Commission, from John Robinson, dated November 13, 2012 (''Robinson Letter''); Theodore R. Lazo, Managing Director and Associate General Counsel, Securities Industry and Financial Markets Association, dated November 20, 2012 (''SIFMA Letter II''); Jeremy Abelson, MJA Capital, dated November 21, 2012 (''Abelson Letter''); Douglas G. Thompson, Michael G. McLellan, and Robert O. Wilson, Finkelstein Thompson LLP, Christopher Lovell, Victor E. Stewart, and Fred T. Isquith, Lovell Stewart Halebian Jacobson LLP, Jacob H. Zamansky and Edward H. Glenn, Zamansky & Associates LLC, dated November 23, 2012 (''Thompson Letter II''); Tim Mann, dated November 23, 2012 (''Mann Letter''); and Mark Shelton, Group Managing Director and General Counsel, UBS Securities LLC, dated November 23, 2012 (''UBS Letter II'').

[9] *See* letter to Elizabeth M. Murphy, Secretary, Commission, from Joan C. Conley, Senior Vice President and Corporate Secretary, Nasdaq, dated December 7, 2012 (''Nasdaq Letter II'').

[10] *See* Securities Exchange Act Release No. 68707 (January 23, 2013), 78 FR 6154 (January 29, 2013).

[11] According to Nasdaq Rule 4626(a), any losses, damages, or other claims, related to a failure of the Nasdaq Market Center to deliver, display, transmit, execute, compare, submit for clearance and settlement, adjust, retain priority for, or otherwise correctly process an order, Quote/Order, message, or other data entered into, or created by, the Nasdaq Market Center is absorbed by the member, or the member sponsoring the customer, that entered the order, Quote/Order, message, or other data into the Nasdaq Market Center.

[12] *See* Nasdaq Rule 4626(b)(1). Under Nasdaq Rule 4626(b)(2), with respect to the aggregate of all claims made by all market participants during a single calendar month related to a systems malfunction or error of the Nasdaq Market Center concerning locked/crossed market, trade through protection, market maker quoting, order protection, or firm quote compliance functions of the market participant, to the extent such functions are electronically enforced by the Nasdaq trading system and where Nasdaq determines in its sole discretion that such systems malfunction or error was caused exclusively by Nasdaq and no outside factors contributed to the systems malfunction or error, Nasdaq's payment during a single calendar month will not exceed the larger of $3,000,000 or the amount of the recovery obtained by Nasdaq under any applicable insurance policy. *See* Nasdaq Rule 4626(b)(2). The Facebook initial public offering does not implicate the types of systems errors or malfunctions described in Nasdaq Rule 4626(b)(2).

[13] In addition to adding proposed subsection (b)(3) to Nasdaq Rule 4626, Nasdaq proposes to make certain technical amendments to existing subsections of that rule. *See, e.g.,* proposed Nasdaq Rule 4626(b)(4) and (b)(6).

[14] *See* Nasdaq Rule 4753. The Commission recently proposed Regulation Systems Compliance and Integrity (''Regulation SCI'') because of a highlighted ''need to consider an updated and formalized regulatory framework for ensuring that the U.S. securities trading markets develop and maintain systems with adequate capacity, integrity, resiliency, availability, and security, and reinforce the requirement that [automated] systems operate in compliance with the [Act].'' *See* Securities Exchange Act Release No. 69077 (March 8, 2013) (File No. S7–01–13) (proposing release for Regulation SCI).

[15] *See* proposed Nasdaq Rule 4626(b)(3); Notice, *supra* note 3, at 47507.

[16] As proposed, unless Nasdaq Rule 4626 states otherwise, the term ''customer'' includes any unaffiliated entity upon whose behalf an order is entered, including any unaffiliated broker or dealer. *See* proposed Nasdaq Rule 4626(b)(3)(A).

[17] *See* proposed Nasdaq Rule 4626(b)(3)(A); Notice, *supra* note 3, at 45710–11. In addition, proposed Nasdaq Rule 4626(b)(3)(C) states that alleged losses arising in any form or that in any way resulted from any other causes would not be considered losses eligible for the proposed accommodations. Proposed Nasdaq Rule 4626(b)(3)(C) sets forth a non-exhaustive list of examples of such losses.

[18] $40.527 constitutes the volume-weighted average price (''VWAP'') of Facebook stock on May 18, 2012, between 1:50 p.m. ET and 2:35 p.m. ET. *See* proposed Nasdaq Rule 4626(b)(3)(B). *See also* Notice, *supra* note 3, at 45710–11 (describing Nasdaq's rationale for establishing the $40.527 benchmark).

[19] *See* proposed Nasdaq Rule 4626(b)(3)(B); *see also* Notice, *supra* note 3, at 45710 (describing Nasdaq's rationale for lowering the amount of eligible losses for the fourth category of Cross orders).

according to proposed Rule 4626(b)(3)(B), the measure of loss for the Cross orders described in (ii) above would be the differential between the expected execution price of the orders in the Cross process that established an opening print of $42.00 and the actual execution price received.[20]

With respect to the process for submitting claims pursuant to proposed Nasdaq Rule 4626(b)(3), all claims must be submitted in writing no later than seven days after this accommodation proposal is approved by the Commission.[21] As proposed, the Financial Industry Regulatory Authority, Inc. (''FINRA'') would process and evaluate all the claims submitted, using the standards set forth in Nasdaq Rule 4626.[22] FINRA would then provide to the Nasdaq Board of Directors and the Board of Directors of The NASDAQ OMX Group, Inc. an analysis of the total value of eligible claims submitted under proposed Nasdaq Rule 4626(b)(3), and Nasdaq would thereafter file with the Commission a proposed rule change setting forth the amount of eligible claims and the amount it proposes to pay to its members.[23] All payments would be made in cash and would not be made until the proposed rule change setting forth the amount of eligible claims becomes final and effective.[24]

Furthermore, as proposed, in order to receive payment under Nasdaq Rule 4626(b)(3), not later than seven days after the effective date of the proposed rule change setting forth the amount of eligible claims, the member must submit to Nasdaq an attestation detailing the amount of customer compensation [25] and covered proprietary losses.[26] Failure to provide the required attestation within the specified time period would void the member's eligibility to receive compensation under proposed Nasdaq Rule 4626(b)(3).[27] In addition, under proposed Nasdaq Rule 4626(b)(3)(H), all payments to members under the accommodation proposal would be contingent upon the execution and delivery to Nasdaq of a release by the member of all claims by it or its affiliates against Nasdaq or its affiliates for losses that arise out of, are associated with, or relate in any way to the Facebook IPO Cross or any actions or omissions related in any way to that Cross.[28] The failure to provide this release within 14 days after the effective date of the proposed rule change setting forth the amount of eligible claims would void the member's eligibility to receive compensation pursuant to proposed Nasdaq Rule 4626(b)(3).[29]

With respect to the priority of payment under proposed Nasdaq Rule 4626(b)(3), payments would be made in two tranches.[30] First, if the member has provided customer compensation, the member would receive an amount equal to the lesser of the member's share [31] or the amount of customer compensation.[32] Second, the member would receive an amount with respect to covered proprietary losses, however, the sum of payments to a member would not exceed the member's share.[33] According to proposed Nasdaq Rule 4626(b)(3)(G), if the amount calculated under the first tranche (*i.e.,* customer compensation) exceeds $62 million, accommodation would be prorated among members eligible to receive accommodation under the first tranche. If the first tranche is paid in full and the amount calculated under the second tranche exceeds the funds remaining from the $62 million accommodation pool, such funds would be prorated among members eligible to receive accommodation under the second tranche.[34] Further, if a member's eligibility to receive funds is voided under proposed Nasdaq Rule 4626(b)(3), and the funds payable to other members must be prorated, the funds available to pay other members would be increased accordingly.[35]

III. Summary of Comments and Nasdaq's Responses

As previously noted, the Commission received a total of seventeen comment letters on the accommodation proposal and two response letters from Nasdaq.[36] Fourteen commenters raised concerns with respect to the accommodation proposal,[37] two commenters expressed their support for the accommodation proposal,[38] and one commenter addressed the issue of exchange liability more broadly.[39]

Commenters raised concerns in the following areas, each of which is discussed in greater detail below: (1) The requirement that market participants release all other potentially valid claims as a condition to participation in the accommodation program; (2) Nasdaq's calculation and use of a benchmark price of $40.527; (3) the categories of claim-eligible trading losses; (4) the amount of the accommodation pool; (5) regulatory immunity from private suits and limitations on liability; (6) the applicability of Nasdaq Rule 4626; (7) the impact of approval of the accommodation proposal on pending litigation; and (8) two procedural issues.

A. Release of All Claims Relating to the Facebook IPO Cross

Several commenters expressed concerns that payment to eligible

[20] Each member's direct trading losses calculated in accordance with proposed Nasdaq Rule 4626(b)(3)(A) and (B) are referred to as the ''member's share.'' *See* proposed Nasdaq Rule 4626(b)(3)(B).

[21] *See* proposed Nasdaq Rule 4626(b)(3)(D). According to Nasdaq, notice of approval would be publicly posted on the Nasdaq Trader Web site at *www.nasdaqtrader.com* and provided directly to all member firms via an Equity Trader Alert. *See* Notice, *supra* note 3, at 45712.

[22] *See* proposed Nasdaq Rule 4626(b)(3)(D). FINRA may request such supplemental information as it deems necessary to assist its evaluation of claims. *See id.* According to Nasdaq, FINRA's role would be limited to measuring data against the benchmarks established under Nasdaq Rule 4626(b)(3) to ascertain the eligibility and value of each member's claims. *See* Notice, *supra* note 3, at 45712. Further, Nasdaq represented that FINRA staff assessing the claims would not be involved in providing regulatory services to any Nasdaq market, and they would not have purchased Facebook stock during Nasdaq's IPO opening process or currently own Facebook stock. *See id.*

[23] *See* proposed Nasdaq Rule 4626(b)(3)(E). According to Nasdaq, the report that FINRA prepares for Nasdaq on its analysis of the eligibility of claims also would be provided to the public members of FINRA's Audit Committee. *See* Notice, *supra* note 3, at 45712.

[24] *See* proposed Nasdaq Rule 4626(b)(3)(E).

[25] According to proposed Nasdaq Rule 4626(b)(3)(F)(i), ''customer compensation'' means the amount of compensation, accommodation, or other economic benefit provided or to be provided by the member to its customers (other than customers that were brokers or dealers trading for their own account) in respect of trading in Facebook on May 18, 2012.

[26] According to proposed Nasdaq Rule 4626(b)(3)(F)(ii), ''covered proprietary losses'' means the extent to which the losses reflected in the member's share were incurred by the member trading for its own account or for the account of a customer that was a broker or dealer trading for its own account.

[27] *See* proposed Nasdaq Rule 4626(b)(3)(F). In addition, each member must maintain books and records that detail the nature and amount of customer compensation and covered proprietary losses. *See id.* According to Nasdaq, it, through FINRA, would expect to examine the accuracy of a member's attestation at a later date. *See* Notice, *supra* note 3, at 45712.

[28] *See* proposed Nasdaq Rule 4626(b)(3)(H); Notice, *supra* note 3, at 45713 (explaining the purpose of the release requirement).

[29] *See* proposed Nasdaq Rule 4626(b)(3)(H).

[30] *See* proposed Nasdaq Rule 4626(b)(3)(G).

[31] *See supra* note 20.

[32] *See* proposed Nasdaq Rule 4626(b)(3)(G).

[33] *See id.*

[34] *See id.*

[35] *See id.*

[36] *See supra* notes 4–5, and 8–9.

[37] *See* Triad Letter; Vandham Letter; Bram Letter; Citi Letter; SIFMA Letter I; UBS Letter I; Entwistle Letter; and Thompson Letter I, *supra* note 4. *See also,* Robinson Letter; SIFMA Letter II; Abelson Letter; Thompson Letter II; Mann Letter; and UBS Letter II, *supra* note 8.

[38] *See* Citadel Letter and Knight Letter, *supra* note 4.

[39] *See* Angel Letter, *supra* note 4. The Angel Letter does not opine on the proposal, but rather comments more generally on what the appropriate parameters of liability should be for national securities exchanges.

claimants is conditioned upon the member firm executing a release of claims by the firm or its affiliates against Nasdaq for losses associated with the Facebook IPO on May 18, 2012.[40] Specifically, one commenter indicated that requiring execution of the release as a precondition to participation in the accommodation proposal creates a ''fundamentally unfair dilemma'' for members.[41] According to the commenter, Nasdaq members must choose to execute a release of claims and participate in the accommodation program, which may not make the member whole, or pursue ''cost-and resource-intensive alternative avenues of recovery.''[42] This commenter believes that members should be able to both participate in the accommodation program and be able to pursue other avenues of recourse. According to this commenter, any recovery under the accommodation program should be ''setoff against future claims,'' but should not preclude future claims against Nasdaq, especially for claims for losses that are not eligible for compensation under the accommodation program.[43] This commenter further stated that any release requirement should be limited to the categories of claim-eligible trading losses—allowing other avenues of recourse for losses that are not eligible to receive compensation under the accommodation program.[44] Another commenter noted that releases of claims are typically the product of commercial, arms-length negotiation and not part of a rule imposed by a regulatory authority.[45] Finally, one commenter suggested that Nasdaq members be given the option to ''opt in'' to the accommodation program on an order by order basis or a firm by firm basis.[46]

In response, Nasdaq asserted that the release requirement is fair, reasonable, and furthers the objectives of Section 6(b)(5) of the Act[47] because it is ''aimed at avoiding unnecessary litigation and ensuring equal treatment of all members receiving funds under the [accommodation] [p]roposal.''[48] Moreover, Nasdaq noted that participation in the accommodation program and execution of the release are entirely voluntary.[49] Accordingly, members that wish to forgo participation in the accommodation program and pursue claims against Nasdaq instead remain free to do so.[50] Nasdaq also noted that the use of a release is routine in the context of a payment in settlement of a disputed claim, including those brought against regulated entities.[51] Finally, Nasdaq argued that allowing members to participate in the accommodation program without releasing Nasdaq from other claims related to the Facebook IPO Cross would, in effect, ''subsidize the costs of future litigation against itself.''[52]

B. Nasdaq's Uniform Benchmark Price

Several commenters expressed concern with Nasdaq's calculation and use of the uniform benchmark price of $40.527 to determine the amount of compensation owed to a member under the accommodation proposal.[53] Generally, these commenters stated that, contrary to Nasdaq's assertion, a ''reasonably diligent member'' would not have mitigated losses during the first forty-five minutes after execution reports were delivered to firms.[54] More specifically, two commenters stated that the uniform benchmark price should be based on a VWAP of Facebook stock on Monday, May 21, 2012.[55]

In response, Nasdaq reasserted that the use of the VWAP of Facebook stock during the 45 minute window after 1:50 p.m. is appropriate as the benchmark price because 45 minutes provided members enough time to identify and mitigate any unexpected losses or unanticipated positions.[56] Nasdaq argued that an objective benchmark, rather than a subjective benchmark premised on an evaluation of each individual member's circumstances and trading decisions, is necessary to avoid inconsistent and potentially discriminatory distributions under the accommodation proposal.[57] Additionally, because Nasdaq is not prepared to increase the size of the $62 million accommodation pool, Nasdaq believes that ''a change in the benchmark price would actually reduce the funds available to claimants that acted quickly to mitigate their losses, for the benefit of those that did not.''[58]

C. Nasdaq's Categories of Claim-Eligible Trading Losses

Several commenters stated that the types of orders eligible to receive compensation under the accommodation proposal are too narrowly defined.[59] Two commenters believe that Nasdaq should provide compensation for losses resulting from ''downstream operational, technological and customer issues.''[60] One commenter stated that Nasdaq's system failures, specifically the failure to deliver execution reports for more than two hours after trading began, ''caused direct and severe damage'' to the commenter and other market participants and led to direct trading losses.[61] Another commenter argued that customer orders entered before

[40] *See* UBS Letter I, *supra* note 4, at 3–4; Vandham Letter, *supra* note 4, at 3; Knight Letter, *supra* note 4, at 2; and UBS Letter II, *supra* note 8 at 3–4.

[41] *See* UBS Letter I, *supra* note 4, at 3.

[42] *See id.*

[43] *See* UBS Letter II, *supra* note 8, at 3.

[44] *See id.*

[45] *See* Knight Letter, *supra* note 4, at 2.

[46] *See* Vandham Letter, *supra* note 4, at 3.

[47] 15 U.S.C. 78f(b)(5).

[48] *See* Nasdaq Letter I, *supra* note 5, at 5. One commenter observed that the release requirement may actually ''deter those who suffered the greatest harm from participating in the Program'' which may result in Nasdaq exhausting the $62 million accommodation pool without significantly reducing Nasdaq's litigation exposure. *See* UBS Letter II, *supra* note 8, at note 5.

[49] *See* Nasdaq Letter I, *supra* note 5, at 5; and Nasdaq Letter II, *supra* note 9, at 4.

[50] *See id.*

[51] *See id.*

[52] *See* Nasdaq Letter I, *supra* note 5, at 5. Nasdaq stated that it ''is not prepared to make the accommodation it proposes to members that are unwilling to accept that accommodation in full satisfaction of any claims they might otherwise assert against Nasdaq.'' *See* Nasdaq Letter II, *supra* note 9, at 4.

[53] *See* Triad Letter, *supra* note 4, at 1–3; Vandham Letter, *supra* note 4, at 2; Bram Letter, *supra* note 4, at 1; and Citi Letter, *supra* note 4, at 2 and 10. According to Nasdaq, the forty-five minutes after execution reports were delivered ''would have been ample time for a reasonably diligent member to have identified any unexpected customer losses or unanticipated customer positions, and taken steps to mitigate or liquidate them.'' *See* Notice, *supra* note 3, at footnote 24.

[54] *See* Triad Letter, *supra* note 4, at 1–3; Vandham Letter, *supra* note 4, at 2; Bram Letter, *supra* note 4, at 1; and Citi Letter, *supra* note 4, at 2 and 10.

[55] *See* Triad Letter, *supra* note 4, at 1; and Citi Letter, *supra* note 4, at 2 (stating that the benchmark price should be the VWAP of Facebook stock between the opening price on Monday, May 21, 2012 and the price at noon on that same day).

[56] *See* Nasdaq Letter I, *supra* note 5, at 3. Specifically, Nasdaq noted that: (i) All orders and cancellations, including those entered between 11:11 a.m. and 11:30 a.m., were ''executed, cancelled, or released into the market'' by 1:50 p.m.; (ii) confirmations of all trades and cancellations had been disseminated to members by 1:50 p.m.; and (iii) Nasdaq began reporting a firm bid and ask to the tape and all data feeds were operating normally by 1:50 p.m. *See id.* at 3–4. Nasdaq also stated that it issued a ''System Status message'' informing members that all systems were operating normally at 1:57 p.m. *See id.* at 4.

[57] *See* Nasdaq Letter II, *supra* note 9, at 4.

[58] *See id.*

[59] *See* UBS Letter I, *supra* note 4, at 2–3; Citi Letter, *supra* note 4, at 7–10; Vandham Letter, *supra* note 4, at 3; and UBS Letter II, *supra* note 8, at 3.

[60] *See* UBS Letter I, *supra* note 4, at 3. *See also* UBS Letter II, *supra* note 8, at 3; and Citi Letter, *supra* note 4, at 7–10 (noting that ''[i]n some cases, investors submitted multiple redundant orders based on the belief that the orders were not going through'' and ''[i]n other cases, investors submitted cancelations before receiving order confirmations, but were stuck with the stock.'').

[61] *See* UBS Letter I, *supra* note 4, at 3; UBS Letter II, *supra* note 8, at 3 (urging the Commission to condition approval of the accommodation proposal on expansion of the categories of losses eligible for compensation).

11:11 a.m. on May 18, 2012, that were ''cancel/replaced'' between 11:11 a.m. and 11:30:09 a.m. should be treated differently from other orders entered during such time and should be entitled to full compensation.[62]

Another commenter observed that the accommodation proposal provides no direct compensation to ''ordinary retail investors'' and does not guarantee that retail investors would receive any compensation for losses.[63] Because Nasdaq's proposal contemplates paying retail customers through Nasdaq member broker-dealers, the commenter expressed concern that there is no guarantee that compensation will ultimately be passed back to the retail investor, especially in instances where the member's ''customer'' is another broker-dealer.[64]

Nasdaq responded by stating that the question before the Commission is only whether the proposal is consistent with the requirements of the Act.[65] Nasdaq asserted that commenters have not argued that the proposal ''discriminates unfairly'' among members or that it is otherwise inconsistent with the requirements of the Act.[66] Nasdaq stated its belief that none of the comments provide a basis for the Commission to determine that a modification to the methodology and criteria it proposed ''is necessary to remedy any inconsistency with the Exchange Act.'' [67] With respect to retail investors, Nasdaq stated that its accommodation proposal would benefit retail investors with eligible claims even though Nasdaq has no direct relationship with them.[68] Nasdaq noted that the accommodation proposal requires each member to submit an attestation detailing the amount of compensation provided or to be provided by the member to its customers.[69] Moreover, Nasdaq pointed out that accommodation payments are to be made in two tranches with the first tranche going toward retail customer claims.[70]

D. $62 Million Accommodation Pool is Insufficient

Several commenters argued that the proposed $62 million accommodation pool is an insufficient amount to compensate market participants harmed by Nasdaq's systems issues.[71] One commenter expressed concern that the second tranche of payments, which would provide compensation for covered proprietary losses [72] (the majority of this commenter's losses), may not be reimbursed at all as claims for customer losses disbursed in the first tranche will likely exhaust the entire accommodation pool.[73]

Nasdaq responded that commenters' objections to the amount of compensation are ''unpersuasive'' because the Commission has already determined that rules, such as existing Nasdaq Rule 4626, limiting exchange liability are consistent with the Act.[74] Furthermore, according to Nasdaq, if the accommodation proposal is disapproved, the current (much lower) limitation on liability of $500,000 would apply.[75] Nasdaq emphasized that members who believe the amount of compensation offered is insufficient or otherwise dislike the accommodation proposal may elect not to participate.[76] Nasdaq stated that it is not prepared to increase the size of the $62 million dollar accommodation pool.[77] According to Nasdaq, the purpose of the accommodation proposal is ''to modify an existing rule that limits Nasdaq's liability to $500,000 in order to make additional funds available to compensate members and their customers for the categories of loss defined in the [accommodation] [p]roposal * * *.'' [78] Nasdaq stated that ''[t]he purpose of the [accommodation] [p]roposal is not to pay all claims of losses alleged with respect to the trading of Facebook stock, nor even all claims of losses alleged to have been incurred on May 18, 2012.'' [79] As to one commenter's concern that the accommodation pool will be exhausted before any payments are made in the second tranche for covered proprietary losses, Nasdaq stated that it believes that the $62 million ''will be sufficient fully to compensate valid claims under the terms'' of the accommodation proposal.[80] Moreover, Nasdaq argued, that it believes ''the proposed prioritization of payment in favor of members who have or will pass compensation on to their customers is consistent with the Act.'' [81]

E. Regulatory Immunity from Private Suits and Limitations on Liability

A number of commenters asserted that Nasdaq is not entitled to immunity from liability because it was acting in its ''for profit'' capacity in its handling of the Facebook IPO, rather than acting in its ''regulatory capacity'' as a self-regulatory organization.[82] However, several commenters stated their belief that the broader issues of regulatory immunity and limitations on exchange liability should be considered separately from Nasdaq's accommodation proposal.[83]

Nasdaq responded that the Commission's task with regard to the accommodation proposal is only to determine whether the proposed rule change is consistent with the Act, and the Commission does not need to address the issue of regulatory immunity to do so.[84]

F. Applicability of Nasdaq Rule 4626

According to one commenter, market participants' losses ''resulted not from the type of ordinary system failures contemplated by Rule 4626 * * *, but rather from a known design flaw that resulted in a similar technology issue dating back to Fall 2011, as well as Nasdaq's high-risk, profit-oriented

[62] *See* Vandham Letter, *supra* note 4, at 3. The commenter believes that Nasdaq's failure to properly account for cancel/replaced orders resulted in Nasdaq ''taking the profits generated from certain clients to distribute amongst a larger group.'' *See id.*

[63] *See* Thompson Letter I, *supra* note 4, at 3–4; and Thompson Letter II, *supra* note 8, at note 1.

[64] *See* Thompson Letter I, *supra* note 4, at 11. *See also* Thompson Letter II, *supra* note 8, at note 1.

[65] *See* Nasdaq Letter I, *supra* note 5, at 2.

[66] *See id. But see* Robinson Letter, *supra* note 8, at 1; Abelson Letter, *supra* note 8, at 2; and Mann Letter, *supra* note 8, at 1 (all generally stating each commenter's belief that anything less than full compensation for his losses is inconsistent with the ''just and equitable principles of trade'' and is therefore inconsistent with the requirements of the Act); *see also* Triad Letter, *supra* note 4, at 2; Vandham Letter, *supra* note 4, at 1, 3; UBS Letter I, *supra* note 4, at 2–3; Thompson Letter I, *supra* note 4, at 3–4 (generally arguing for greater compensation to market participants for their losses).

[67] *See* Nasdaq Letter I, *supra* note 5, at 4.

[68] *See id.* at 8.

[69] *See id.*

[70] *See id.*

[71] *See* UBS Letter I, *supra* note 4, at 2 (estimating that its losses are ''in excess of $350 million'' and describing Nasdaq's proposal to pay $62 million in the aggregate as ''woefully inadequate''); Thompson Letter I, *supra* note 4, at 4 and 20; Thompson Letter II, supra note 8, at note 1; and UBS Letter II, *supra* note 8, at 2–4.

[72] See supra notes 26, 30–34 and accompanying text.

[73] *See* UBS Letter II, *supra* note 8, at 2–4.

[74] *See* Nasdaq Letter I, *supra* note 5, at 2.

[75] *See id.*

[76] *See id.* at 2–3; and Nasdaq Letter II, *supra* note 9, at 4.

[77] *See* Nasdaq Letter II, *supra* note 9, at 4.

[78] *See* Nasdaq Letter I, *supra* note 5, at 4.

[79] *See id.* Nasdaq expanded on this point in its second response letter, emphasizing that the proposal is designed to compensate members for ''only those losses directly attributable to the systems issues experienced by Nasdaq'' and not ''to address specific members' individual problems.'' *See* Nasdaq Letter II, *supra* note 9, at 3.

[80] *See* Nasdaq Letter II, *supra* note 9, at 4.

[81] *See id.*

[82] *See* Citi Letter, *supra* note 4, at 2–4 and 12–15; SIFMA Letter I, *supra* note 4, at 2–4; Thompson Letter I, *supra* note 4, at 8–10; Thompson Letter II, *supra* note 8, at note 1; and UBS Letter II, *supra* note 8, at 4–5.

[83] *See* Citadel Letter, *supra* note 4, at 2; Knight Letter, *supra* note 4, at 2; Thompson Letter II, *supra* note 8, at note 2; UBS Letter II, *supra* note 8, at 4–5; SIFMA Letter II, *supra* note 8, at 3.

[84] *See* Nasdaq Letter I, *supra* note 5, at 6–7.

behavior prior to and during the IPO * * *''[85] This commenter argued that it is improper to use Rule 4626 to create an accommodation fund in connection with the Facebook IPO because the losses suffered in connection with the IPO do not fall within the parameters of Rule 4626.[86]

Nasdaq emphasized in response that Rule 4626 is a pre-existing Commission approved rule and that the rule squarely applies to Nasdaq's systems issues related to the Facebook IPO.[87]

G. Impact on Pending Litigation

Two commenters expressed concern that Commission approval of the accommodation proposal might negatively impact other adjudications of disputes with Nasdaq regarding the Facebook IPO.[88] The commenters expressed concern that courts or other adjudicative bodies might interpret Commission approval of the accommodation proposal as defining or approving the classes of eligible claimants as restricted only to market participants who submitted one of the four enumerated Cross order types.[89] Nasdaq did not specifically respond to commenters' concerns on this issue.

H. Procedural Concerns

Several commenters raised procedural concerns regarding the implementation of the accommodation proposal.[90] Two commenters noted that Nasdaq should waive the one-year time limit to bring actions against Nasdaq in Sections 18(H) and 19 of its Service Agreement given the amount of time it could take to implement the compensation process set forth in the proposed rule change.[91] Four commenters stated that Nasdaq member firms should not be required to release Nasdaq from liability before member firms receive notice of a final payment amount pursuant to the accommodation proposal.[92]

Nasdaq responded that commenters' requests to extend the one-year time limit for members to bring claims against Nasdaq improperly ask the Commission to interfere with existing contractual relationships that have no bearing on whether Nasdaq Rule 4626 should be amended.[93] As for concerns that claimants might have to release their claims against Nasdaq prior to receiving compensation under the accommodation proposal, Nasdaq represents that the release will become effective upon payment.[94]

IV. Discussion and Commission Findings

As described above, commenters have raised a number of concerns about the proposed rule change, many contending that it is not a fair or equitable approach to compensating market participants harmed by Nasdaq's system issues. Nasdaq has explained, however, that it did not design the proposed rule change to compensate all claims of loss suffered by market participants relating to Nasdaq's system difficulties with the Cross.[95] Rather, Nasdaq, in the accommodation proposal, is proposing to change a Nasdaq rule that in its current form strictly limits the amount of compensation that may be paid to users of the Nasdaq Market Center. In considering whether to approve the proposed rule change, the Commission takes into account the existing circumstances and the manner in which the current Nasdaq rules would operate if the Commission disapproved the proposed rule change.[96]

The Commission finds that the proposed rule change is consistent with the requirements of the Act and the rules and regulations thereunder applicable to a national securities exchange.[97] Specifically, the Commission finds that the proposed rule change is consistent with Section 6(b)(5) of the Act,[98] which requires, among other things, that the rules of a national securities exchange be designed to prevent fraudulent and manipulative acts and practices, to promote just and equitable principles of trade, to foster cooperation and coordination with persons engaged in regulating, clearing, settling, processing information with respect to, and facilitating transactions in securities, to remove impediments to and perfect the mechanism of a free and open market and a national market system, and, in general, to protect investors and the public interest, and not be designed to permit unfair discrimination between customers, issuers, brokers, or dealers.

Existing Nasdaq rules state that Nasdaq and its affiliates are not liable for any losses, damages, or other claims arising out of the Nasdaq Market Center or its use.[99] However, as noted above,[100] Nasdaq Rule 4626(b) currently allows Nasdaq to compensate users of the Nasdaq Market Center for certain types of losses directly resulting from its systems' actual failures. Under current Nasdaq Rule 4626(b)(1), payment for all such claims made by all market participants during a single calendar month cannot exceed the larger of $500,000 or the amount of recovery obtained by Nasdaq under any applicable insurance policy.[101] While the accommodation proposal is not designed to, and would not, compensate all claims of loss suffered by market participants relating to Nasdaq's system

[85] *See* Citi Letter, *supra* note 4, at 4, and 15–16.

[86] *See id.*

[87] *See* Nasdaq Letter I, *supra* note 5, at 5–6.

[88] *See* Thompson Letter I, *supra* note 4, at 4–8; and Entwistle Letter, *supra* note 4, at 2. *See also* Thompson Letter II, supra note 8, at 2–3.

[89] *See* Thompson Letter I, *supra* note 4, at 4–8; and Entwistle Letter, *supra* note 4, at 2. One commenter also expressed concern about the potential impact of Commission approval on pending litigation with respect to: (i) Nasdaq's claim of immunity; (ii) the causes and effects of Nasdaq's system issues; (iii) the validity of Nasdaq's uniform benchmark price as an estimate of Facebook's stock price in the absence of any Nasdaq systems issues; (iv) the types and categories of losses that should or should not be recognized as compensable; and (v) various other factual and legal assumptions the commenter believes Nasdaq's accommodation proposal contains. *See* Thompson Letter II, supra note 8, at 2.

[90] *See* Citi Letter, *supra* note 4, at 16; SIFMA Letter I, *supra* note 4, at 5; Knight Letter, *supra* note 4, at 2; and SIFMA Letter II supra note 8, at 3.

[91] Section 18(H) provides ''that any claim, dispute, controversy, or other matter in question arising out of the agreement must be made no later than one year after it has arisen. Section 19 of the agreement provides that any claim, dispute, controversy, or other matter in question arising out of the agreement is expressly waived if it is not brought within that period.'' *See* SIFMA Letter I, *supra* note 4, at 5; *see also* Citi Letter, *supra* note 4, at 16; and SIFMA Letter II, *supra* note 8, at 3.

[92] *See* SIFMA Letter I, *supra* note 4, at 5–6; Citi Letter, *supra* note 4, at 16; Knight Letter, *supra* note 4, at 2; and UBS Letter II, *supra* note 8, at 4. *See also* SIFMA Letter II supra note 8, at 2.

[93] *See* Nasdaq Letter I, *supra* note 5, footnote 11. Nasdaq believes that members who voluntarily choose to proceed with their claims outside of the accommodation proposal ''should do so under the terms and conditions they have agreed to, and not seek to use the Commission's notice and comment process to renegotiate their prior contractual commitments.'' *See id.*

[94] *See id.* at footnote 9. Nasdaq also stated that it intends to implement the accommodation proposal such that a member would be aware of the results of its claim prior to being required to execute a release. *See id. See also,* SIFMA Letter II, *supra* note 8, at 2 (stating that this commenter appreciated Nasdaq's clarification on this issue).

[95] *See supra* notes 78 to 79 and accompanying text. Several commenters observed that the accommodation proposal will indeed not result in full compensation for their losses. *See, e.g., supra* notes 71–73 and accompanying text. Commenters also noted that some market participants have brought legal actions alleging claims against Nasdaq based on system difficulties encountered during the Facebook IPO. *See* Thompson Letter I, *supra* note 4, at 3; and Entwistle Letter, *supra* note 4, at 1. The Commission notes that approval of this proposed rule change has no bearing on claims made in any pending litigation against Nasdaq related to systems difficulties encountered during the Facebook IPO.

[96] While commenters have suggested various modifications to the accommodation proposal that would, in their view, make it better, the Commission's authority is only to approve or disapprove the change as proposed by Nasdaq. *See generally* Section 19(b) of the Act.

[97] In approving this proposed rule change, the Commission has considered the proposed rule's impact on efficiency, competition, and capital formation. *See* 15 U.S.C. 78c(f).

[98] 15 U.S.C. 78f(b)(5).

[99] *See* Nasdaq Rule 4626(a).

[100] *See supra* notes 11–12 and accompanying text.

[101] *See* Nasdaq Rule 4626(b)(1).

difficulties with the Cross,[102] the Commission notes that the accommodation proposal would create a means of providing significantly more compensation for eligible claims, outside of litigation, than would otherwise be available under existing Nasdaq Rule 4626(b). Accordingly, approval of the proposed rule change will make more funds available to compensate investors and Nasdaq members under Nasdaq's rules, which the Commission believes is in the public interest.[103]

The Commission believes that the proposal sets forth objective and transparent processes to determine eligible claims and how such claims would be paid to Nasdaq members that elect to participate in the accommodation plan. Specifically, Nasdaq proposes to provide additional compensation beyond that available under existing Rule 4626(b)(1) for claims of realized or unrealized direct trading losses arising from four specific categories of Cross orders.[104] Also, as noted above, proposed Nasdaq Rule 4626(b)(3)(B) would set forth the methods for calculating the amount of losses for each of the four categories of Cross orders.[105] In addition, proposed Nasdaq Rule 4626(b)(3)(D) specifies the time period for a member to submit its claim and provides that FINRA would process and evaluate the claims.[106] Proposed Nasdaq Rule 4626(b)(3)(E) sets forth details regarding FINRA's review process, the timing of payments by Nasdaq, and the manner of payment (*i.e.,* in cash).[107]

As discussed in more detail above, several commenters objected to limiting compensation under the accommodation proposal to the four categories of Cross orders.[108] Further, several commenters questioned the adequacy of the amount of compensation that would be provided to Nasdaq members under the accommodation proposal as well as the calculation and use of the benchmark price in determining the amount of loss repayable under the accommodation proposal.[109] In determining that approval of the accommodation proposal is consistent with the Act, the Commission is not reaching any conclusion on the overall adequacy of the amount of the compensation pool, the benchmark price used, or other limitations on eligibility.

In order to receive compensation under proposed Nasdaq Rule 4626(b)(3), a member must timely submit to Nasdaq an attestation detailing the amount of customer compensation and covered proprietary losses.[110] The proposal would further require the member to maintain books and records that detail the nature and amount of customer compensation and covered proprietary losses.[111] The Commission believes that the proposed attestation and recordkeeping requirements should help incentivize Nasdaq members to accurately determine the amount of customer compensation and covered proprietary losses and submit claims accordingly. Moreover, payments made pursuant to proposed Nasdaq Rule 4626(b)(3) would be made in two tranches—a member would first receive an amount equal to the lesser of the member's share or the amount of customer compensation,[112] and then receive an amount with respect to covered proprietary losses.[113] The Commission believes that, because the accommodation proposal would accommodate members for customer losses before accommodating members for proprietary losses, the accommodation proposal should encourage members to compensate their customers for customer losses related to the Facebook IPO.

Lastly, in order to receive payments under proposed Nasdaq Rule 4626(b)(3), within 14 days after the effective date of a separate proposed rule change setting forth the amount of eligible claims, a member must execute and deliver to Nasdaq a release of all claims by the member or its affiliates against Nasdaq or its affiliates for losses that arise out of, are associated with, or relate in any way to the Facebook IPO Cross or to any actions or omissions related in any way to that Cross.[114] As discussed above, several commenters opposed the proposed waiver of claims.[115] However, although a member must execute a release of claims in order to receive any payment under proposed Nasdaq Rule 4626(b)(3), participation in the accommodation program is voluntary, which means a member is free to elect not to submit a claim for compensation under the accommodation program and choose instead to pursue other remedies.[116]

For the reasons discussed in this section, the Commission finds that Nasdaq's proposal to amend its existing Rule 4626 to increase the amount of compensation Nasdaq is authorized to provide from $500,000 to $62 million for certain types of claims arising in connection with the Facebook IPO on May 18, 2012, is consistent with the Section 6(b)(5) of the Act. In reaching its conclusion, the Commission is relying on the representations made by Nasdaq in its accommodation proposal, but is not making any determinations regarding the accuracy of the facts as represented by Nasdaq, and notes that certain commenters have contested Nasdaq's representation of the facts. In addition, the Commission is not expressing any view with respect to any issue other than whether the proposed rule change is consistent with Section 19(b) of the Act. For example, as discussed above, several commenters questioned whether Nasdaq should be entitled to immunity from liability based on its actions with respect to the Facebook IPO.[117] Other commenters argued that the question of whether regulatory immunity applies should be considered separately from this proposed rule change.[118] Whether regulatory immunity should apply to Nasdaq in connection with its actions related to the Facebook IPO is outside the scope of the proposed rule change and the Commission's consideration of such proposed rule change. Similarly, as discussed in more detail above, several commenters expressed concern that approval of the proposed rule change could potentially impact pending litigation with Nasdaq regarding the Facebook IPO.[119] The Commission emphasizes that this approval order addresses only whether the proposed change to Nasdaq's existing

[102] *See supra* note 79 and accompanying text.

[103] Several commenters questioned the adequacy of the amount of compensation that would be provided to Nasdaq members under the accommodation proposal as well as the calculation and use of the benchmark price in determining the amount of loss repayable under the accommodation proposal. *See supra* notes 53–55, 71 and accompanying text.

[104] *See* proposed Nasdaq Rule 4626(b)(3)(A).

[105] *See supra* notes 18–20 and accompanying text.

[106] *See supra* notes 21–23 and accompanying text.

[107] *See supra* notes 23–24 and accompanying text.

[108] *See supra* notes 59–64 and accompanying text.

[109] *See supra* notes 53–55, 71 and accompanying text.

[110] *See* proposed Nasdaq Rule 4626(b)(3)(F).

[111] *See id.*

[112] *See supra* note 25 (defining ''customer compensation'').

[113] *See* proposed Nasdaq Rule 4626(b)(3)(G). *See also supra* notes 26 (defining ''covered proprietary losses'') and 30–35 and accompanying text (explaining how funds are to be allocated).

[114] *See* proposed Nasdaq Rule 4626(b)(3)(H).

[115] *See supra* notes 40–46 and accompanying text.

[116] The Commission notes that Nasdaq intends to implement the accommodation proposal such that a member would be aware of the results of its claim prior to being required to execute a release and that Nasdaq represents that the release will become effective upon payment. *See supra* note 94 and accompanying text.

[117] *See supra* note 82 and accompanying text.

[118] *See supra* note 83 and accompanying text.

[119] *See supra* notes 88–89 and accompanying text.

accommodation rule is consistent with Section 19(b) of the Act. The Commission also notes that, given the amount of time it could take to implement the compensation process set forth in the proposed rule change, several commenters urged Nasdaq to waive the one-year time limit set forth in Nasdaq's service agreement within which members must bring actions against Nasdaq.[120] Because Nasdaq's service agreement is not before the Commission as a part of this proposed rule change, the Commission expresses no view with respect to whether Nasdaq should provide an exception under the service agreement. Finally, in issuing this order, the Commission is expressing no view as to whether Nasdaq or any other person may have violated the federal securities laws or any other laws, any rule or regulation thereunder, or the rules of Nasdaq or any other self-regulatory organization, in connection with the Facebook IPO.

V. Conclusion

It is therefore ordered, pursuant to Section 19(b)(2) of the Act,[121] that the proposed rule change (SR–NASDAQ–2012–090) be, and hereby is, approved.

By the Commission.

Kevin M. O'Neill,

Deputy Secretary.

[FR Doc. 2013–07192 Filed 3–27–13; 8:45 am]

BILLING CODE 8011–01–P

[120] *See supra* note 91 and accompanying text.

[121] 15 U.S.C. 78s(b)(2).

SECURITIES AND EXCHANGE COMMISSION

[Release No. 34–69212; File No. SR–NSX–2013–10]

Self-Regulatory Organizations; National Stock Exchange, Inc.; Notice of Filing and Immediate Effectiveness of Proposed Rule Change To Provide the Ability To Prevent Zero Display Reserve Orders From Executing in a Locked Market

March 22, 2013.

Pursuant to Section 19(b)(1) of the Securities Exchange Act of 1934 (the ''Act'')[1] and Rule 19b–4 thereunder,[2] notice is hereby given that on March 18, 2013, National Stock Exchange, Inc. (''NSX®'' or the ''Exchange'') filed with the Securities and Exchange Commission (''Commission'') the proposed rule change, as described in Items I and II below, which Items have been prepared by the Exchange. The Commission is publishing this notice to solicit comment on the proposed rule change from interested persons.

I. Self-Regulatory Organization's Statement of the Terms of Substance of the Proposed Rule Change

The Exchange is proposing to amend Exchange Rules 11.11, 11.14, and 11.15 to: (i) Provide Users[3] with the ability to instruct the Exchange not to execute a Zero Display Reserve Order[4] when the protected bid is equal to the protected offer (i.e., a locked market); (ii) clarify that a Zero Display Reserve Order will be eligible for execution after the market is no longer locked; and (iii) clarify that a Zero Display Reserve Order will retain time priority if it is not executed during a locked market. The Exchange also proposes to make a ministerial change to Rule 11.11(c)(2)(A). The Exchange has designated this proposal as non-controversial and provided the Commission with the notice required by Rule 19b–4(f)(6)(iii) under the Act.[5]

The text of the proposed rule change is available on the Exchange's Web site at *http://www.nsx.com,* at the principal office of the Exchange, and at the Commission's Public Reference Room.

II. Self-Regulatory Organization's Statement of the Purpose of, and Statutory Basis for, the Proposed Rule Change

In its filing with the Commission, the Exchange included statements concerning the purpose of and basis for the proposed rule change and discussed any comments it received on the proposed rule change. The text of these statements may be examined at the places specified in Item IV below. The Exchange has prepared summaries, set forth in sections A, B, and C below, of the most significant parts of such statements.

A. Self-Regulatory Organization's Statement of the Purpose of, and Statutory Basis for, the Proposed Rule Change

1. Purpose

On October 10, 2012, the Exchange filed a proposed rule change for immediate effectiveness with the Commission to amend Rules 11.11(c)(2)(A), 11.11(c)(2)(D), 11.14(a)(4) and Rule 11.15(a)(iv) to clarify that the Exchange will not execute a Zero Display Reserve Order when a protected bid is priced higher than a protected offer (i.e., a crossed market).[6] The Exchange now proposes to expand upon this rule change to amend its Rules to allow ETP Holders to instruct the Exchange, on an order-by-order basis, not to execute a Zero Display Reserve Order during a locked market. Specifically, the Exchange proposes to amend Rules 11.11(c)(2)(D), 11.14(a)(4) and Rule 11.15(a)(iv) to: (i) Provide Users with the ability to instruct the Exchange not to execute a Zero Display Reserve Order during a locked market; (ii) clarify that a Zero Display Reserve Order will be eligible for execution after the market is no longer locked; and (iii) clarify that a Zero Display Reserve Order will retain time priority if it is not executed during a locked market. The Exchange also proposes to make a ministerial change to Rule 11.11(c)(2)(A).

Users enter Zero Display Reserve Orders to either access undisplayed liquidity at or between the Protected Best Bid and Offer (''BBO'')[7] or post undisplayed liquidity on the NSX Book. Users post Zero Display Reserve Orders to the NSX Book to avoid potential negative market impact that could result from publicly displaying their trading interest.[8] The Exchange believes that a locked market is, at times, the result of stale quotations that are disseminated by the securities information processor (''SIP''), and not always reflective of a fair and orderly market.[9] Investors may not receive the best price available if their orders are executed during a locked market when the locked market is the result of a stale quote. In fact, an investor may receive a worse price if its

[1] 15 U.S.C. 78s(b)(1).

[2] 17 CFR 240.19b–4.

[3] In sum, Exchange Rule 1.5 defines the term ''user'' as ''any ETP Holder or Sponsored Participant who is authorized to obtain access to the System pursuant to Rule 11.9.''

[4] Under Exchange Rule 11.11(c)(2)(A), a ''Zero Display Reserve Order'' is a ''Reserve Order with zero display quantity.'' Under Exchange Rule 11.11(c)(2), a ''Reserve Order'' is a ''limit order with a portion of the quantity displayed (''display quantity'') and with a reserve portion of the quantity (''reserve quantity'') that is not displayed.''

[5] 17 CFR 240.19b–4(f)(6)(iii).

[6] *See* Securities Exchange Act Release No. 68056 (October 16, 2012), 77 FR 64571 (October 22, 2012) (SR–NSX–2012–16).

[7] Under Exchange Rule 1.5, the ''Protected BBO'' is defined as the better of the ''(a) Protected NBBO or (b) [t]he displayed Top of Book.'' Orders that may be posted to the NSX Book at or between the Protected BBO are a Zero Display Reserve Order with a limit price, a Market Peg Zero Display Reserve Order, and a Midpoint Peg Zero Display Reserve Order. Under Exchange Rule 11.11(c)(2)(A), a ''Market Peg Zero Display Reserve Order'' is a ''pegged Zero Display Reserve Order which tracks the opposite side of the market'' (e.g., the buy-side of the Protected BBO for a sell order or the sell-side of the Protected BBO for a buy order) and a ''Midpoint Peg Zero Display Reserve Order'' is a ''pegged Zero Display Reserve Order that tracks the midpoint'' of the Protected BBO.''

[8] Under Exchange Rule 11.14(a)(4), the Exchange notes that a displayed order maintains time priority ahead of an undisplayed order, such as a Zero Display Reserve Order, at the same price.

[9] *See also* footnote 432 to Securities Exchange Act Release No. 51808 (June 9, 2005), 70 FR 37496 (June 29, 2005) (Regulation NMS Adopting Release).

Zero Display Reserve Order, specifically when pegged to the BBO,[10] is executed during a locked market rather than if the System waited for the first unlocked market. The Commission also stated that it believes that repeated or continual locking or crossing of a market may raise concerns about the orderliness and efficiency of the markets.[11] Therefore, the Exchange proposes to amend Rules 11.11, 11.14, and 11.15 to provide Users the ability when entering a Zero Display Reserve Order to instruct the Exchange, on an order-by-order basis, not to execute an order during a locked market.

Exchange Rule 11.11(c)(2)(D)

First, the Exchange proposes to amend Rule 11.11(c)(2)(D) to allow ETP Holders to indicate when entering a Zero Display Reserve Order that the order not be eligible for execution during a locked market. Exchange Rule 11.11(c)(2)(D) would also be amended to state that a Zero Display Reserve Order that is not eligible for execution during a locked market would remain posted on the NSX Book while the protected bid is priced lower than the protected offer (i.e., unlocked market), or the order is cancelled by the ETP Holder.

Exchange Rule 11.14

Exchange Rule 11.14(a)(4) sets forth the execution priority for Reserve Orders, including Zero Display Reserve Orders. Under this rule, Reserve Orders have time priority over Zero Display Reserve Orders. The time priority among Zero Display Reserve Orders at the same price is established by several factors including whether the order has a Minimum Execution Quantity Instruction.[12] Under the proposed amendment to Rules 11.11(c)(2)(A) and 11.15(a)(iv), a Zero Display Reserve Order that contains an instruction from the User not to execute during a locked market will, unless cancelled by the User, be posted to the NSX Book and executed when the market is no longer locked. The Exchange proposes to amend Rule 11.14(a)(4) to state that each Zero Display Reserve Order posted to the NSX Book during a locked market will retain its time priority as set forth in Rule 11.14(a)(4).

Exchange Rule 11.15

Exchange Rule 11.15(a)(iv) currently provides that a Zero Display Reserve Order designated as a Post Only Order[13] which is marketable upon entry, but not executed pursuant to Rule 11.11(c)(5)(B), is ranked in the NSX Book and ''matched for execution in accordance with Rule 11.15.'' Under Exchange Rule 11.15(a)(iv)(B), the Exchange will not execute a Zero Display Reserve Order in an NMS Stock[14] during a crossed market. The Exchange proposes to amend Rule 11.15(a)(iv)(B) to now allow Users to indicate when entering a Zero Display Reserve Order that the order is not eligible for execution during a locked market. The Exchange will resume executing Zero Display Reserve Orders against incoming marketable contra-side orders once the market is no longer locked. As discussed above, Zero Display Reserve Orders that are not executed during a locked market will retain time priority in accordance with Rule 11.14(a)(4). A User's request to cancel or replace a Zero Display Reserve Order during this period will be handled pursuant to Rule 11.11(9)(d).

Exchange Rule 11.11(c)(2)(A)

The Exchange also proposed to make a ministerial change to Rule 11.11(c)(2)(A). In part, Rule 11.11(c)(2)(A) states that ''[a] pegged Zero Display Reserve Order may have an optional limit price (''Cap'') beyond which the order shall not be executed.'' The Exchange simply proposes to amend this sentence to remove ''Cap'' as a defined term as it is not referenced elsewhere in the Exchange's Rules. In doing so, the Exchange does not propose to alter the operation or its interpretation of the Rule.

2. Statutory Basis

The Exchange believes that the proposed changes to Rules 11.11(c)(2)(D), 11.14(a)(4) and Rule 11.15(a)(iv) are consistent with the provisions of Section 6(b) of the Act,[15] in general, and Section 6(b)(5) of the Act,[16] in particular. The proposed rule change provides an ETP Holder flexibility by allowing them to choose that its Zero Display Reserve Order not be executed during a locked market. Zero Display Reserve Orders that are not eligible to be executed during a locked market will, unless cancelled by the User, be posted to the NSX Book, retain their time priority while posted to the NSX Book, and be eligible for execution once the market is no longer locked. Certain Users of the Zero Display Reserve Orders have indicated that executing orders during a locked market may harm investors. These market participants believe that a locked market is the result of stale quotations that are disseminated by the SIP, and not reflective of a fair and orderly market.[17] Investors may not receive the best price available if their orders are executed during a locked market because the locked market is a stale quote. In addition, an investor may receive a worse price if its order is executed during a locked market rather than if the System waited for the first unlocked market. The Commission also stated that it believes that repeated or continual locking or crossing of a market may raise concerns about the orderliness and efficiency of the markets.[18] Therefore, the Exchange believes the proposed rule change promotes just and equitable principles of trade, removes impediments to, and perfect the mechanism of, a free and open market and a national market system.

The Exchange also believes the proposed change to Rule 11.11(c)(2)(A) is consistent with the provisions of Section 6(b)(5) of the Act[19] because it promotes just and equitable principles of trade by simplifying the Exchange's Rules. The Exchange proposes to remove an incorrect reference as a defined term which is not referenced elsewhere in the Exchange's Rules. In doing so, the Exchange does not propose to alter the operation or its interpretation of the Rule.

B. Self-Regulatory Organization's Statement on Burden on Competition

The Exchange does not believe that the proposed rule change will impose any burden on competition that is not necessary or appropriate in furtherance of the purposes of the Exchange Act. The Exchange believes allowing ETP Holder flexibility to choose that its Zero Display Reserve Order not be executed during a locked market will enhance order execution opportunities for ETP Holders on the NSX. Certain Users of the Zero Display Reserve Orders have indicated that executing orders during a locked market may harm investors. These market participants believe that a locked market is the result of stale quotations that are disseminated by the

[10] *See supra* note 7.

[11] *See* Securities Exchange Act Release No. 49325 (February 26, 2004), 69 FR 11126 (March 9, 2004) (Regulation NMS Proposing Release).

[12] *See* Exchange Rule 11.14(a)(4).

[13] Under Exchange Rule 11.11(c)(5), a ''Post Only Order'' is a ''limit order that is to be posted on the Exchange and not routed away to another trading center.''

[14] ''NMS Stock'' shall have the same definition as under Rule 600(b)(47) of Regulation NMS under the Exchange Act.

[15] 15 U.S.C. 78f(b).

[16] 15 U.S.C. 78f(b)(5).

[17] *See* Regulation NMS Adopting Release, *supra* note 9.

[18] *See* Regulation NMS Proposing Release, *supra* note 11.

[19] 15 U.S.C. 78f(b)(5).

SIP, and not reflective of a fair and orderly market.[20] Investors may not receive the best price available if their orders are executed during a locked market because the locked market is a stale quote. In addition, an investor may receive a worse price if its order is executed during a locked market rather than if the System waited for the first unlocked market. The Commission also stated that it believes that repeated or continual locking or crossing of a market may raise concerns about the orderliness and efficiency of the markets.[21] Therefore, the Exchange does not believe that the proposed rule change will impose any burden on competition that is not necessary or appropriate in furtherance of the purposes of the Exchange Act.

Lastly, the amendments to Exchange Rule 11.11(c)(2)(A) merely simplifies the Exchange Rules by removing an incorrect reference as a defined term which is not referenced elsewhere. Therefore, the Exchange does not believe that the proposed rule change will impose any burden on competition that is not necessary or in furtherance of the Exchange Act.

C. Self-Regulatory Organization's Statement on Comments on the Proposed Rule Change Received From Members, Participants, or Others

Written comments on the proposed rule change were neither solicited nor received.

III. Date of Effectiveness of the Proposed Rule Change and Timing for Commission Action

Because the proposed rule change does not (i) significantly affect the protection of investors or the public interest; (ii) impose any significant burden on competition; and (iii) become operative for 30 days from the date on which it was filed, or such shorter time as the Commission may designate if consistent with the protection of investors and the public interest, the proposed rule change has become effective pursuant to Section 19(b)(3)(A) of the Act [22] and Rule 19b–4(f)(6)(iii) thereunder.[23]

The Exchange has asked the Commission to waive the 30-day operative delay so that the proposal may become operative immediately upon filing. The Commission believes that waiving the 30-day operative delay is consistent with the protection of investors and the public interest. Such waiver would allow the Exchange to provide Users with the ability to instruct the Exchange not to execute a Zero Display Reserve Order when the protected bid is equal to the protected offer without delay. The Commission notes that the rule change affecting treatment of undisplayed orders during a locked market on NSX raises no novel issues and is similar to the treatment of undisplayed orders during a locked market on another exchange.[24] For this reason, the Commission waives the operative delay and designates the proposed rule change to be operative upon filing.[25]

At any time within 60 days of the filing of the proposed rule change, the Commission summarily may temporarily suspend such rule change if it appears to the Commission that such action is necessary or appropriate in the public interest, for the protection of investors, or otherwise in furtherance of the purposes of the Act. If the Commission takes such action, the Commission shall institute proceedings under Section 19(b)(2)(B) [26] of the Act to determine whether the proposed rule change should be approved or disapproved.

IV. Solicitation of Comments

Interested persons are invited to submit written data, views, and arguments concerning the foregoing, including whether the proposed rule change is consistent with the Act. Comments may be submitted by any of the following methods:

Electronic Comments

- Use the Commission's Internet comment form (*http://www.sec.gov/rules/sro.shtml*); or
- Send an email to *rule-comments@sec.gov*. Please include File Number SR–NSX–2013–10 on the subject line.

Paper Comments

- Send paper comments in triplicate to Elizabeth M. Murphy, Secretary, Securities and Exchange Commission, 100 F Street NE., Washington, DC 20549–1090.

All submissions should refer to File Number SR–NSX–2013–10. This file number should be included on the subject line if email is used. To help the Commission process and review your comments more efficiently, please use only one method. The Commission will post all comments on the Commission's Internet Web site (*http://www.sec.gov/rules/sro.shtml*). Copies of the submission, all subsequent amendments, all written statements with respect to the proposed rule change that are filed with the Commission, and all written communications relating to the proposed rule change between the Commission and any person, other than those that may be withheld from the public in accordance with the provisions of 5 U.S.C. 552, will be available for Web site viewing and printing in the Commission's Public Reference Room on official business days between the hours of 10:00 a.m. and 3:00 p.m. Copies of such filing also will be available for inspection and copying at the principal offices of the Exchange. All comments received will be posted without change; the Commission does not edit personal identifying information from submissions. You should submit only information that you wish to make available publicly. All submissions should refer to File Number SR–NSX–2013–10, and should be submitted on or before April 18, 2013.

For the Commission, by the Division of Trading and Markets, pursuant to delegated authority.[27]

Kevin M. O'Neill,

Deputy Secretary.

[FR Doc. 2013–07179 Filed 3–27–13; 8:45 am]

BILLING CODE 8011–01–P

[20] *See* Regulation NMS Adopting Release, *supra* note 9.

[21] *See* Regulation NMS Proposing Release, *supra* note 11.

[22] 15 U.S.C. 78s(b)(3)(A).

[23] 17 CFR 240.19b–4(f)(6)(iii). As required under Rule 19b–4(f)(6)(iii), the Exchange provided the Commission with written notice of its intent to file the proposed rule change, along with a brief description and the text of the proposed rule change, at least five business days prior to the date of filing of the proposed rule change, or such shorter time as designated by the Commission.

[24] *See* SR–NSX–2013–07, Items 7 and 8. *See also* CBSX Rule 51.8(g)(10)–(13).

[25] For purposes only of waiving the 30-day operative delay, the Commission has also considered the proposed rule's impact on efficiency, competition, and capital formation. *See* 15 U.S.C. 78c(f).

[26] 15 U.S.C. 78s(b)(2)(B).

[27] 17 CFR 200.30–3(a)(12).

SECURITIES AND EXCHANGE COMMISSION

[Release No. 34–69221; File No. SR–NSCC–2013–01]

Self-Regulatory Organizations; National Securities Clearing Corporation; Notice of Filing and Immediate Effectiveness of Proposed Rule Change To Net and Bilaterally Offset Aggregated Receive and Deliver Settlement Obligations for Special Trades, and To Use Current Market Price as the Uniform Settlement Price for Net Balance Orders

March 22, 2013.

Pursuant to Section 19(b)(1) of the Securities Exchange Act of 1934 (''Act'') [1] and Rule 19b–4 thereunder,[2] notice is hereby given that on March 11, 2013, National Securities Clearing Corporation (''NSCC'') filed with the Securities and Exchange Commission (''Commission'') the proposed rule change as described in Items I, II and III below, which Items have been prepared primarily by NSCC. NSCC filed the proposed rule change pursuant to Section 19(b)(3)(A)(iii) [3] of the Act and Rule 19b–4(f)(4) [4] thereunder, so that the proposed rule change was effective upon filing with the Commission. The Commission is publishing this notice to solicit comments on the proposed rule change from interested persons.

I. Clearing Agency's Statement of the Terms of Substance of the Proposed Rule Change

The proposed rule change is to modify NSCC's Rules and Procedures (''Rules''), as described below.

II. Clearing Agency's Statement of the Purpose of, and Statutory Basis for, the Proposed Rule Change

In its filing with the Commission, NSCC included statements concerning the purpose of and basis for the proposed rule change and discussed any comments it received on the proposed rule change. The text of these statements may be examined at the places specified in Item IV below. NSCC has prepared summaries, set forth in sections (A), (B), and (C) below, of the most significant aspects of such statements.[5]

(A) Self-Regulatory Organization's Statement of the Purpose of, and Statutory Basis for, the Proposed Rule Change

Bilateral Offset and Net of Special Trades

Pursuant to its Rules, NSCC may determine that some or all transactions in a particular security settle on a trade-for-trade basis between counterparties (''Special Trades'').[6] NSCC will issue receive and deliver instructions for Special Trades to the transacting NSCC members (''Members'') to settle the transactions directly between themselves. In addition, in accordance with the Rules, Members may designate transactions as Special Trades, and agree to settle the transactions on a trade-for-trade basis.[7] NSCC does not guaranty settlement of Special Trades.

Historically, Members were required to settle each Special Trade individually (i.e., trade-for-trade). In order to simplify this process and mitigate the processing burden on Members, NSCC amended its Rules in 2010 [8] in order that it may, at its discretion, aggregate bi-laterally between counterparties the Special Trades that NSCC designates as such, so just one receive order and one deliver order in a given security would need to settle for each party, rather than settling potentially many individual transactions.[9] However, a Special Trade's aggregated buy and sell obligations are not currently netted and offset between the counterparties. For example, if Broker A had 15 buys against Broker B in Security X, these items would be aggregated into one receive obligation for A and one deliver obligation for B for the total amount of shares for the 15 transactions in Security X. Likewise, if Broker A had 20 sells with Broker B on that same day for the same security, those items would also be aggregated into one deliver obligation for A and one receive obligation for B. In this example, A and B would each have two settlement obligations with the other for Security X, rather than the 35 obligations they would each have without aggregation.

In order to further simplify the process described above, NSCC proposes that it may net aggregated positions in transactions designated by it as Special Trades so that any positions (i.e., both receive and deliver obligations) between the transacting Members can be offset against each other, resulting in one bilateral receive obligation or deliver obligation from one party to the other for the given security.[10] In the example above, this would result in each party having one settlement obligation associated with Security X as opposed to two, and realizing a reduced obligation in terms of any associated movement of securities and money settlement.

Under such circumstances, if (1) issuing of a net buy or sell instruction would result in a money settlement that would be directionally opposite to a typical money settlement in relation to its corresponding securities movement (i.e., a Member receives an instruction to receive securities with a corresponding receipt of money settlement payment, or deliver securities with a corresponding delivery of a money payment), or (2) the associated money settlement is flat in relation to the securities movement (i.e., a Member receives an instruction to receive or deliver securities without a corresponding money settlement amount), then NSCC may, in lieu of netting and offsetting, separately aggregate the receive and deliver instructions (as it does currently), so that the transacting Members would each have one aggregate buy obligation and one aggregate sell obligation in the given security.

Net Balance Order Pricing

The uniform settlement price for net Balance Orders is currently established using a rounding methodology.[11] If the current per share price of the Balance Order Security is under $2.00, the Settlement Price will be established to the nearest cent. If the current per share price of the Balance Order Security is between $2.00 and $10.00, the Settlement Price will be rounded to the nearest quarter dollar. If the current per share price of the Balance Order Security is over $10.00, the Settlement Price will be rounded to the nearest whole dollar. To promote the prompt and accurate settlement of Net Balance Orders, NSCC proposes to eliminate the rounding methodology and, instead, apply the current market price for the Balance Order Security as the uniform settlement price for Net Balance Orders.

[1] 15 U.S.C. 78s(b)(1).

[2] 17 CFR 240.19b–4.

[3] 15 U.S.C. 78s(b)(3)(A)(iii).

[4] 17 CFR 240.19b–4(f)(4).

[5] The Commission has modified the text of the summaries prepared by NSCC.

[6] *See* Rules, Procedure II, Section F (*http://dtcc.com/legal/rules_proc/nscc_rules.pdf*).

[7] *Id.*

[8] *See* Release No. 34–61762 (Mar. 23, 2010); 75 FR 15479 (Mar. 29, 2010).

[9] Special Trades designated as such by the transacting Members, not NSCC, are not aggregated and continue to settle on a trade-for-trade basis.

[10] When Members have an equal number of shares bought and sold between them, NSCC will not issue a receive or deliver obligation, but will record any cash difference in the NSCC money settlement system.

[11] *See* Rules, Procedure V, Section C (*http://dtcc.com/legal/rules_proc/nscc_rules.pdf*).

Proposed Changes to Rule Text

NSCC proposes to amend Procedure II of its Rules to provide for the creation of receive and deliver instructions that reflect the net offset of aggregated Special Trade positions, as described above.[12] In addition, regarding Net Balance Orders, NSCC proposes to revise Procedure V of its Rules to delete the rounding methodology and add the current market price methodology, as described above.

Statutory Basis

NSCC believes the proposed rule change, as described above, is consistent with the requirements of the Act, specifically Section 17A(b)(3)(F),[13] and the rules and regulations thereunder applicable to NSCC, because the change provides for operational efficiencies for Members in the settlement of transactions by reducing the number of obligations requiring settlement for Special Trades, and promoting accuracy with respect to the pricing of Net Balance Orders; therefore, facilitating the prompt and accurate clearance and settlement of securities transactions.

(B) Self-Regulatory Organization's Statement on Burden on Competition

NSCC does not believe that the proposed rule change will have any impact, or impose any burden, on competition.

(C) Self-Regulatory Organization's Statement on Comments on the Proposed Rule Change Received From Members, Participants, or Others

Written comments relating to the proposed rule change have not yet been solicited or received. NSCC will notify the Commission of any written comments received by NSCC.

III. Date of Effectiveness of the Proposed Rule Change and Timing for Commission Action

The forgoing rule change has become effective pursuant to Section 19(b)(3)(A)(iii) of the Act [14] and Rule 19b–4(f)(4) [15] thereunder. At any time within 60 days of the filing of the proposed rule change, the Commission summarily may temporarily suspend such rule change if it appears to the Commission that such action is necessary or appropriate in the public interest, for the protection of investors, or otherwise in furtherance of the purposes of the Act.

IV. Solicitation of Comments

Interested persons are invited to submit written data, views and arguments concerning the foregoing, including whether the proposed rule change is consistent with the Act. Comments may be submitted by any of the following methods:

Electronic Comments

- Use the Commission's Internet comment form (*http://www.sec.gov/rules/sro.shtml*); or
- Send an email to *rule-comments@sec.gov.* Please include File No. SR–NSCC–2013–01 on the subject line.

Paper Comments

- Send in triplicate to Elizabeth M. Murphy, Secretary, Securities and Exchange Commission, 100 F Street NE., Washington, DC 20549–1090.

All submissions should refer to File Number SR–NSCC–2013–01. This file number should be included on the subject line if email is used. To help the Commission process and review your comments more efficiently, please use only one method. The Commission will post all comments on the Commission's Internet Web site (*http://www.sec.gov/rules/sro.shtml*). Copies of the submission, all subsequent amendments, all written statements with respect to the proposed rule change that are filed with the Commission, and all written communications relating to the proposed rule change between the Commission and any person, other than those that may be withheld from the public in accordance with the provisions of 5 U.S.C. 552, will be available for Web site viewing and printing in the Commission's Public Reference Room, 100 F Street NE., Washington, DC 20549 on official business days between the hours of 10:00 a.m. and 3:00 p.m. Copies of such filings will also be available for inspection and copying at the principal office of NSCC and on NSCC's Web site at *http://dtcc.com/downloads/legal/rule_filings/2013/nscc/SR-NSCC-2013-01.pdf.*

All comments received will be posted without change; the Commission does not edit personal identifying information from submissions. You should submit only information that you wish to make available publicly. All submissions should refer to File Number SR–NSCC–2013–01 and should be submitted on or before April 18, 2013.

For the Commission, by the Division of Trading and Markets, pursuant to delegated authority.[16]

Kevin M. O'Neill,

Deputy Secretary.

[FR Doc. 2013–07185 Filed 3–27–13; 8:45 am]

BILLING CODE 8011–01–P

[12] As with any Special Trade, NSCC will not guaranty settlement of receive and deliver orders of transactions aggregated and/or net pursuant to the proposed Rule change.

[13] 15 U.S.C. 78q–1(b)(3)(F).

[14] 15 U.S.C. 78s(b)(3)(A)(iii).

[15] 17 CFR 240.19b–4(f)(4).

[16] 17 CFR 200.30–3(a)(12).

SECURITIES AND EXCHANGE COMMISSION

[Release No. 34–69211; File No. SR–NASDAQ–2013–050]

Self-Regulatory Organizations; The NASDAQ Stock Market LLC; Notice of Filing and Immediate Effectiveness of Proposed Rule Change To Assess a Fee for Use of FIX and OUCH Trading Ports for Testing

March 22, 2013.

Pursuant to Section 19(b)(1) of the Securities Exchange Act of 1934 (''Act''),[1] and Rule 19b–4 thereunder,[2] notice is hereby given that on March 18, 2013 The NASDAQ Stock Market LLC (''NASDAQ'' or the ''Exchange'') filed with the Securities and Exchange Commission (''Commission'') a proposed rule change as described in Items I and II below, which Items have been prepared by the Exchange. The Commission is publishing this notice to solicit comments on the proposed rule change from interested persons.

I. Self-Regulatory Organization's Statement of the Terms of Substance of the Proposed Rule Change

NASDAQ proposes to establish fees under Rules 7015(b) and (g) for use of FIX Trading Ports and OUCH Trading Ports, respectively, that are used for testing. NASDAQ will begin assessing the proposed fee on April 1, 2013.

The text of the proposed rule change is below. Proposed new language is *italicized.*

* * * * *

7015. Access Services

The following charges are assessed by Nasdaq for connectivity to systems operated by NASDAQ, including the Nasdaq Market Center, the FINRA/NASDAQ Trade Reporting Facility, and FINRA's OTCBB Service. The following fees are not applicable to the NASDAQ Options Market LLC. For related options fees for Access Services refer to Chapter XV, Section 3 of the Options Rules.

(a) No change.

(b) Financial Information Exchange (FIX)

[1] 15 U.S.C. 78s(b)(1).

[2] 17 CFR 240.19b–4.

Ports	Price
FIX Trading Port	$500/port/month *.
FIX Port for Services Other than Trading.	500/port/month.

Ports	Price
FIX Trading Port for Testing Nasdaq will assess the following fee for each FIX Trading Port assigned to an MPID that is in test mode in excess of one.	300/port/month.

(c)–(f) No change.

(g) Other Port Fees

Remote Multi-cast ITCH Wave Ports

Description	Installation fee	Recurring monthly fee
MITCH Wave Port at Secaucus, NJ	$2,500	$7,500
MITCH Wave Port at Weehawken, NJ	2,500	7,500
MITCH Wave Port at Newark, NJ	2,500	7,500
.		

The following port fees shall apply in connection with the use of other trading telecommunication protocols:

- $500 per month for each port pair,* other than Multicast ITCH® data feed pairs, for which the fee is $1,000 per month for software-based TotalView-ITCH or $2,500 per month for combined software- and hardware-based TotalView-ITCH.
- An additional $200 per month for each port used for entering orders or quotes over the Internet.
- An additional $600 per month for each port used for market data delivery over the Internet.
- *$300 per port, per month for each OUCH Port assigned to an MPID that is in test mode in excess of one.*

(h) No change.

* Eligible for 25% discount under the Qualified Market Maker Program during a pilot period expiring on April 30, 2013.

* * * * *

II. Self-Regulatory Organization's Statement of the Purpose of, and Statutory Basis for, the Proposed Rule Change

In its filing with the Commission, NASDAQ included statements concerning the purpose of, and basis for, the proposed rule change and discussed any comments it received on the proposed rule change. The text of those statements may be examined at the places specified in Item IV below. The Exchange has prepared summaries, set forth in sections A, B, and C below, of the most significant parts of such statements.

A. Self-Regulatory Organization's Statement of the Purpose of, and Statutory Basis for, the Proposed Rule Change

1. Purpose

NASDAQ is proposing to amend Rules 7015(b) and (g) to establish fees for the member firm use of FIX Trading Ports and OUCH Ports, respectively, maintained in test mode. A FIX Trading Port and an OUCH Port are both connections to the NASDAQ trading system (collectively, ''Trading Ports''). Currently, a member firm may elect to designate a subscribed Trading Port as either in ''production mode'' or in ''test mode.'' A Trading Port that is in production mode allows a member firm to send orders for execution on the Exchange system in the normal course. When a member firm changes a Trading Port's status to test mode, NASDAQ will not allow normal order activity to occur through the port but rather it limits all order activity to test ticker symbols. The purpose of test mode is to permit a member firm to test its connection to the trading system to ensure that its messages are received accurately by the Exchange and that there are no issues with its own systems.[3] Member firms are assessed a monthly fee of $500 per port for each Trading Port subscribed in production mode.[4] Member firms are not currently assessed a fee for a Trading Port that is in test mode.

NASDAQ has audited the use of Trading Ports in test mode and found that a substantial number are not used for testing, but rather remain idle. NASDAQ incurs costs associated with maintaining such ports, including costs incurred maintaining servers and their physical location, monitoring order activity, and other support. Accordingly, NASDAQ is proposing to allow a member firm to designate for each of its MPIDs a single Trading Port in test mode at any given time at no cost, and will assess a member firm a fee of $300 per port/per month for each additional Trading Port assigned to an MPID that is in test mode.[5] NASDAQ is proposing to assess the fee beginning April 1, 2013.

NASDAQ is proposing to allow member firms to either cancel Trading Ports in test mode or put such ports into production at any time up to close of business April 30, 2013 without incurring the proposed fee. This will allow member firms to adjust to the new fee and encourage them to either place idle test mode ports into production or cancel them. Any Trading Ports a member firm has assigned to an MPID that are in test mode in excess of one on May 1, 2013 will be assessed the full $300 per port monthly fee for the month of April, and each month thereafter unless canceled or placed into production. A member firm that subscribes a new Trading Port with an initial status of test mode for an MPID with an existing Trading Port in test mode will not be assessed the test mode fee for that additional Trading Port if it

[3] NASDAQ also provides member firms with access to a dedicated test environment that closely approximates the production environment and on which they may test their automated systems that integrate with NASDAQ. Subscribers typically use this test environment to test upcoming NASDAQ releases and product enhancements, as well as test software prior to implementation. *See* Rule 7030(d).

[4] Rules 7015(b) and (g).

[5] The proposed fees are specific to the type of Trading Port. Therefore for purposes of calculating the proposed fee, only an existing FIX Port in test mode assigned to a particular MPID would count as a free Trading Port in test mode under Rule 7015(b). Likewise, only an existing OUCH Port in test mode assigned to a particular MPID would count as a free Trading Port in test mode under Rule 7015(g). FIX ports not used for trading do not have a test mode, and therefore NASDAQ is not proposing any test mode fee for such ports.

is placed into production mode in the same calendar month. Any Trading Port that is not exempted from the proposed fee and whose status is changed from test mode to production mode during any month will be assessed the proposed $300 fee, prorated for the days of the month that the port was in test mode, and assessed the applicable Trading Port fee of $500 for the days of the month that the port is in production mode.[6] If a port that is in production mode is changed to test mode, the member firm will be assessed the full month's fee for production mode, even if there are no other Trading Ports assigned to the MPID in Test Mode. If an existing Trading Port in test mode is canceled by a member firm at any point in a given month, the firm will be assessed the full test mode fee for that month.

2. Statutory Basis

The Exchange believes that its proposal is consistent with Section 6(b) of the Act[7] in general, and with Section 6(b)(4)[8] of the Act, in particular. The Exchange believes it is consistent with Section 6(b)(4) of the Act because it provides for the equitable allocation of reasonable dues, fees and other charges among members and issuers and other persons using any facility or system which the Exchange operates or controls. The proposed fee is based on the cost to NASDAQ of developing and maintaining multiple port connections to the Exchange, which are not used in the production environment and are designated as in test mode. As noted, NASDAQ invests time and capital in initiating, monitoring and maintaining port connections to its system. Currently, NASDAQ does not have a means to recoup its investment and costs associated with providing member firms with Trading Ports that are in test mode and NASDAQ believes that the proposed fee is reasonable because the fee is intended to cover the Exchange's costs incurred in maintaining test mode ports and is less than what is charged for a Trading Port in production mode. The proposed fee may also allow NASDAQ to make a profit to the extent the costs associated with developing and maintaining Trading Ports in test mode are covered. Moreover, the Exchange believes that the proposed fee does not discriminate unfairly as it will promote efficiency in the market by incentivizing member firms to either place into production idle ports or cancel them. As a consequence, only a member firm that is inefficient in its use of Trading Ports in test mode will be assessed the fee. The Exchange believes the proposed fee is equitably allocated because all Exchange member firms that voluntarily elect to subscribe to Trading Ports, yet maintain them in test mode, will be charged the [sic] equally on a per-port basis. NASDAQ notes that a member firm is afforded a single Trading Port in test mode for each of its MPIDs at any given time at no cost, and therefore may avoid the proposed fee altogether to the extent it is able to bring efficiency to its testing operations and port utilization. Moreover, NASDAQ believes that providing a free test mode Trading Port for each of a member firm's MPIDs is an equitable allocation because it avoids penalizing member firms that may have multiple MPIDs for different lines of business, and as such would only be afforded a single free Trading Port in test mode for all lines of business.

B. Self-Regulatory Organization's Statement on Burden on Competition

NASDAQ does not believe that the proposed rule change will result in any burden on competition that is not necessary or appropriate in furtherance of the purposes of the Act, as amended. The proposed fee merely allows NASDAQ to recapture the costs associated with maintaining member ports that are in test mode, and may provide NASDAQ with a profit to the extent its costs are covered. The fee is applied uniformly, so that only a member firm that is unable to use its Trading Ports in test mode efficiently will pay more than a similarly situated member firm, and a member firm may avoid any burden if it is efficient in such use. In this way, the proposed fee will promote efficient use of Trading Ports for testing. Any burden arising from the fee is necessary in the interest of promoting a more efficient market.

C. Self-Regulatory Organization's Statement on Comments on the Proposed Rule Change Received From Members, Participants, or Others

Written comments were neither solicited nor received.

III. Date of Effectiveness of the Proposed Rule Change and Timing for Commission Action

The foregoing rule change is effective upon filing pursuant to Section 19(b)(3)(A)[9] of the Act and subparagraph (f)(2) of Rule 19b–4[10] thereunder, because it establishes a due, fee, or other charge imposed by NASDAQ.

At any time within 60 days of the filing of such proposed rule change, the Commission summarily may temporarily suspend such rule change if it appears to the Commission that such action is necessary or appropriate in the public interest, for the protection of investors, or otherwise in furtherance of the purposes of the Act. If the Commission takes such action, the Commission should institute proceedings to determine whether the proposed rule change should be approved or disapproved.

IV. Solicitation of Comments

Interested persons are invited to submit written data, views, and arguments concerning the foregoing, including whether the proposed rule change is consistent with the Act. Comments may be submitted by any of the following methods:

Electronic Comments

- Use the Commission's Internet comment form (*http://www.sec.gov/rules/sro.shtml);* or
- Send an email to *rule-comments@sec.gov*. Please include File Number SR–NASDAQ–2013–050 on the subject line.

Paper Comments

- Send paper comments in triplicate to Elizabeth M. Murphy, Secretary, Securities and Exchange Commission, 100 F Street NE., Washington, DC 20549–1090.

All submissions should refer to File Number SR–NASDAQ–2013–050. This file number should be included on the subject line if email is used. To help the Commission process and review your comments more efficiently, please use only one method. The Commission will post all comments on the Commission's Internet Web site (*http://www.sec.gov/rules/sro.shtml*). Copies of the submission, all subsequent amendments, all written statements with respect to the proposed rule change that are filed with the Commission, and all written communications relating to the proposed rule change between the Commission and any person, other than those that may be withheld from the public in accordance with the provisions of 5 U.S.C. 552, will be available for Web site viewing and printing in the Commission's Public Reference Room, 100 F Street NE., Washington, DC 20549, on official business days between the hours of 10:00 a.m. and 3:00 p.m. Copies of the filing also will be available for

[6] Pursuant to Rules 7015(b) or (g).

[7] 15 U.S.C. 78f(b).

[8] 15 U.S.C. 78f(b)(5).

[9] 15 U.S.C. 78s(b)(3)(A).

[10] 17 CFR 240.19b–4(f)(2).

inspection and copying at the principal office of the Exchange. All comments received will be posted without change; the Commission does not edit personal identifying information from submissions. You should submit only information that you wish to make available publicly. All submissions should refer to File Number SR–NASDAQ–2013–050 and should be submitted on or before April 18, 2013.

For the Commission, by the Division of Trading and Markets, pursuant to delegated authority.[11]

Kevin M. O'Neill,

Deputy Secretary.

[FR Doc. 2013–07178 Filed 3–27–13; 8:45 am]

BILLING CODE 8011–01–P

[11] 17 CFR 200.30–3(a)(12).

SECURITIES AND EXCHANGE COMMISSION

[Release No. 34–69219; File No. SR–BX–2013–025]

Self-Regulatory Organizations; NASDAQ OMX BX, Inc.; Notice of Filing and Immediate Effectiveness of a Proposed Rule Change To Amend Exchange Rule 4120

March 22, 2013.

Pursuant to Section 19(b)(1) of the Securities Exchange Act of 1934 (''Act''),[1] and Rule 19b–4 thereunder,[2] notice is hereby given that on March 11, 2013, NASDAQ OMX BX, Inc. (''Exchange''), filed with the Securities and Exchange Commission (''Commission'') the proposed rule change as described in Items I and II below, which Items have been prepared by the Exchange. The Commission is publishing this notice to solicit comments on the proposed rule change from interested persons.

I. Self-Regulatory Organization's Statement of the Terms of Substance of the Proposed Rule Change

The Exchange proposes to amend Exchange Rule 4120 to establish rules to comply with the requirements of the Plan to Address Extraordinary Market Volatility submitted to the Commission pursuant to Rule 608 of Regulation NMS.

The text of the proposed rule change is available on the Exchange's Web site at *http://nasdaqomxbx.cchwall street.com,* at the principal office of the Exchange, at the Commission's Public Reference Room, and on the Commission's Web site at *http://www.sec.gov.*

[1] 15 U.S.C. 78s(b)(1).

[2] 17 CFR 240.19b–4.

II. Self-Regulatory Organization's Statement of the Purpose of, and Statutory Basis for, the Proposed Rule Change

In its filing with the Commission, the Exchange included statements concerning the purpose of and basis for the proposed rule change and discussed any comments it received on the proposed rule change. The text of these statements may be examined at the places specified in Item IV below. The Exchange has prepared summaries, set forth in Sections A, B, and C below, of the most significant aspects of such statements.

A. Self-Regulatory Organization's Statement of the Purpose of, and Statutory Basis for, the Proposed Rule Change

1. Purpose

The Exchange proposes to amend Exchange Rule 4120 to establish rules to comply with the requirements of the Plan to Address Extraordinary Market Volatility submitted to the Commission pursuant to Rule 608 of Regulation NMS under the Act (the ''Plan'').[3]

Background

Since May 6, 2010, when the markets experienced excessive volatility in an abbreviated time period, *i.e.,* the ''flash crash,'' the equities exchanges and FINRA have implemented market-wide measures designed to restore investor confidence by reducing the potential for excessive market volatility. Among the measures adopted include pilot plans for stock-by-stock trading pauses[4] and related changes to the equities market clearly erroneous execution rules[5] and more stringent equities market maker quoting requirements.[6] On May 31, 2012, the Commission approved the Plan, as amended, on a one-year pilot basis.[7] In addition, the Commission approved changes to the equities market-wide circuit breaker rules on a pilot basis to coincide with the pilot period for the Plan.[8]

The Plan is designed to prevent trades in individual NMS Stocks from occurring outside of specified Price Bands.[9] As described more fully below, the requirements of the Plan are coupled with Trading Pauses to accommodate more fundamental price moves (as opposed to erroneous trades or momentary gaps in liquidity). All trading centers in NMS Stocks, including both those operated by Participants and those operated by members of Participants, are required to establish, maintain, and enforce written policies and procedures that are reasonably designed to comply with the requirements specified in the Plan.[10] As set forth in more detail in the Plan, Price Bands consisting of a Lower Price Band and an Upper Price Band for each NMS Stock are calculated by the Processors.[11] When the National Best Bid (Offer) is below (above) the Lower (Upper) Price Band, the Processors shall disseminate such National Best Bid (Offer) with an appropriate flag identifying it as non-executable. When the National Best Bid (Offer) is equal to the Upper (Lower) Price Band, the Processors shall distribute such National Best Bid (Offer) with an appropriate flag identifying it as a Limit State Quotation.[12] All trading centers in NMS Stocks must maintain written policies and procedures that are reasonably designed to prevent the display of offers below the Lower Price Band and bids above the Upper Price Band for NMS Stocks. Notwithstanding this requirement, the Processor shall display an offer below the Lower Price Band or a bid above the Upper Price Band, but with a flag that it is non-executable. Such bids or offers shall not be included in the National Best Bid or National Best Offer calculations.[13]

Trading in an NMS Stock immediately enters a Limit State if the National Best Offer (Bid) equals but does not cross the Lower (Upper) Price Band.[14] Trading for an NMS stock exits a Limit State if, within 15 seconds of entering the Limit State, all Limit State Quotations were executed or canceled in their entirety. If the market does not exit a Limit State within 15 seconds, then the Primary Listing Exchange would declare a five-minute Trading

[3] *See* Securities Exchange Act Release No. 68953 (Feb. 20, 2013) (Notice of Filing and Immediate Effectiveness of the Second Amendment to the National Market System Plan to Address Extraordinary Market Volatility, File No. 4–631).

[4] *See, e.g.,* BX Rule 4120.

[5] *See, e.g.,* BX Rule 11890.

[6] *See, e.g.,* BX Rule 4613(a).

[7] *See* Securities Exchange Act Release No. 67091 (May 31, 2012), 77 FR 33498 (June 6, 2012) (File No. 4–631) (Order Approving, on a Pilot Basis, the National Market System Plan To Address Extraordinary Market Volatility).

[8] *See* Securities Exchange Act Release No. 67090 (May 31, 2012), 77 FR 33531 (June 6, 2012) (SR–BATS–2011–038; SR–BYX–2011–025; SR–BX–2011–068; SR–CBOE–2011–087; SR–C2–2011–024; SR–CHX–2011–30; SR–EDGA–2011–31; SR–EDGX–2011–30; SR–FINRA–2011–054; SR–ISE–2011–61; SR–NASDAQ–2011–131; SR–NSX–2011–11; SR–NYSE–2011–48; SR–NYSEAmex–2011–73; SR–NYSEArca–2011–68; SR–Phlx–2011–129).

[9] Unless otherwise specified, capitalized terms used in this rule filing are based on the defined terms of the Plan.

[10] The Exchange is a Participant in the Plan.

[11] *See* Section (V)(A) of the Plan.

[12] *See* Section VI(A) of the Plan.

[13] *See* Section VI(A)(3) of the Plan.

[14] *See* Section VI(B)(1) of the Plan.

Pause pursuant to Section VII of the LULD Plan, which would be applicable to all markets trading the security.[15] In addition, the Plan defines a Straddle State as when the National Best Bid (Offer) is below (above) the Lower (Upper) Price Band and the NMS Stock is not in a Limit State. For example, assume the Lower Price Band for an NMS Stock is $9.50 and the Upper Price Band is $10.50, such NMS stock would be in a Straddle State if the National Best Bid were below $9.50, and therefore non-executable, and the National Best Offer were above $9.50 (including a National Best Offer that could be above $10.50). If an NMS Stock is in a Straddle State and trading in that stock deviates from normal trading characteristics, the Primary Listing Exchange may declare a Trading Pause for that NMS Stock.

Proposed Amendment to Rule 4120

The Exchange is required by the Plan to establish, maintain, and enforce written policies and procedures that are reasonably designed to comply with the limit up-limit down and trading pause requirements specified in the Plan. In response to the new Plan, the Exchange proposes to amend its Rules accordingly.

The Exchange proposes to add Rule 4120(a)(13)(A)(1) to define that ''Plan'' means the Plan to Address Extraordinary Market Volatility Submitted to the Securities and Exchange Commission Pursuant to Rule 608 of Regulation NMS under the Securities Exchange Act of 1934, Exhibit A to Securities Exchange Act Release No. 67091 (May 31, 2012), 77 FR 33498 (June 6, 2012). In addition, proposed Rule 4120(a)(13)(A)(2) provides that all capitalized terms not otherwise defined in this Rule shall have the meanings set forth in the Plan or Exchange rules, as applicable.

The Exchange proposes to add Rule 4120(a)(13)(C) to provide that Exchange members shall comply with the applicable provisions of the Plan. The Exchange believes that this requirement will help ensure the compliance by its members with the provisions of the Plan as required pursuant to Section II(B) of the Plan.[16]

The Exchange proposes to add Rule 4120(a)(13)(D) to provide that Exchange systems shall not display or execute buy (sell) interest above (below) the Upper (Lower) Price Bands, unless such interest is specifically exempted under the Plan. The Exchange believes that this requirement is reasonably designed to help ensure the compliance with the limit up-limit down and trading pause requirements specified in the Plan, by preventing executions outside the Price Bands as required pursuant to Section VI(A)(1) of the Plan.[17]

The Exchange proposes Rules regarding the treatment of certain trading interest on the Exchange in order to prevent executions outside the Price Bands and to comply with the new LULD Plan. In particular, the Exchange proposes to add Rule 4120(a)(13)(E) to provide that Exchange systems shall re-price or cancel buy (sell) interest that is priced or could be executed above (below) the Upper (Lower) Price Band. Any interest that is repriced pursuant to this Rule shall receive a new time stamp and new execution priority.[18] Specifically, the Exchange proposes the following provisions regarding the repricing or canceling of certain trading interest:

- *Market Orders.* If a market order with a time in force other than Immediate or Cancel cannot be fully executed at or within the Price Bands, Exchange systems shall post the unexecuted portion of the buy (sell) market order at the Upper (Lower) Price Band.
- *Limit-priced Interest.* Both displayable and non-displayable incoming limit-priced interest to buy (sell) that is priced above (below) the Upper (Lower) Price Band shall be repriced to the Upper (Lower) Price Band. The treatment of limit-priced interest will depend upon its order entry protocol. For limit-priced orders entered via the OUCH protocol, the order shall be re-priced upon entry only if the Price Bands are such that the price of the limit-priced interest to buy (sell) would be above (below) the upper (lower) Price Band. Once slid, the treatment of that interest will further depend upon whether it becomes passive or aggressive interest. Specifically, if the order becomes passively priced such that the Price Bands move and the price of the order to buy (sell) would be below (below) the lower (upper) Price Band, the order will not be re-priced again. Rather, the order will either remain on the book at the same price or be cancelled back to the entering party, depending on how the entering party has configured its order entry port. If the interest becomes aggressively priced such that the Price Bands move and the price of the order to buy (sell) would be above (below) the upper (lower) Price Band, the order will not be re-priced again. Rather, the order will be cancelled.
- For limit-priced orders entered via RASH or FIX protocols, the order shall priced upon order entry and then shall be eligible to be repriced by the system multiple times if the Price Bands move such that the price of resting limit-priced interest to buy (sell) would be above (below) the upper (lower) Price Band. Once slid, if the Price Bands move such that the price of resting limit interest to buy (sell) would be below (above) the upper (lower) Price Band the order will continue to be repriced either to its original limit price or to the new price bands, whichever is less aggressive.[19]
- *IOC Orders.* If an IOC order cannot be fully executed at or within the Price Bands, Exchange systems shall cancel any unexecuted portion of the IOC Order.
- *Routable Orders.* Exchange systems shall not route buy (sell) interest to an away market displaying a sell (buy) quote that is above (below) the Upper (Lower) Price Band. Orders that are eligible to be routed to away destinations will be price slid before routing if the buy (sell) is priced above (below) the Upper (Lower) Price Band.
- *Sell Short Orders.* During a Short Sale Price Test, as defined in Rule 4763(b), Short Sale Orders priced below the Lower Price Band shall be repriced to the higher of the Lower Price Band or the Permitted Price, as defined in Rule 4763(b).

The Exchange believes these provisions are reasonably designed to prevent executions outside the Price Bands as required by the limit up-limit down and trading pause requirements specified in the Plan.

The Exchanges also proposes to amend Rule 4120(a)(11) regarding

[15] The primary listing market would declare a trading pause in an NMS Stock; upon notification by the primary listing market, the Processor would disseminate this information to the public. No trades in that NMS Stock could occur during the trading pause, but all bids and offers may be displayed. *See* Section VII(A) of the Plan.

[16] *See* Section II(B) of the Plan.

[17] *See* Section VI(A)(1) of the Plan.

[18] BX believes it is appropriate for re-priced orders to receive a new time stamp and new execution priority rather than jump ahead of previously-entered orders. In effect, an adjustment in price is equivalent to the entry of a new order; that function is simply being automated.

[19] The NASDAQ system will treat limit-priced orders differently depending upon whether the entering firm uses the OUCH protocol on one hand or the RASH or FIX protocols on the other. This different treatment stems from the ultimate destination for orders entered via those protocols. Orders entered via OUCH are destined for direct entry to the NASDAQ matching engine. As such, they are not eligible for special treatments or calculations, including re-pricing. Orders entered via RASH (short for ''routing and special handling'') and FIX are destined for the indirect entry into the matching engine. They are eligible for special treatments and calculations, including re-pricing. This difference in the protocols is longstanding and well-known to NASDAQ members.

Trading Pauses to correspond with the LULD Plan. The proposed change clarifies that the Exchange will continue to follow pauses called by the primary listing market for each security until such time as the LULP Plan is fully implemented. As a result, during Phase 1 of the LULD Plan, a Trading Pause in Tier 1 NMS Stocks shall be subject to the requirements of the LULD Plan and a Trading Pause in Tier 2 NMS Stocks shall be subject to the requirements set forth in Exchange Rule 4120(a)(11). Once the Plan has been fully implemented and all NMS Stocks are subject to the Plan, a Trading Pause under the Plan shall be subject to Exchange Rule 4120(a)(13). These proposed changes are designed to comply with Section VIII of the LULD Plan to ensure implementation of the Plan's requirements.[20]

2. Statutory Basis

The Exchange believes the proposed rule change is consistent with Section 6(b) of the Act[21] in general, and furthers the objectives of Section 6(b)(5),[22] in particular, in that it is designed to promote just and equitable principles of trade, remove impediments to and perfect the mechanisms of a free and open market and a national market system and, in general, to protect investors and the public interest.

The proposal will ensure that the Exchange systems will not display or execute trading interest outside the Price Bands in a manner that promotes just and equitable principles of trade and removes impediments to, and perfects the mechanism of, a free and open market and a national market system.

The proposal will also ensure that the trading interest on the Exchange is either repriced or canceled in a manner that is consistent with. just and equitable principles of trade and removes impediments to, and perfects the mechanism of, a free and open market and a national market system. Specifically, when trading interest is re-priced to comply with the requirements of the Plan, that trading interest will receive a new timestamp and new execution priority. Re-pricing is the automated equivalent of the entry of a new order which would, if done manually, result in a new timestamp and placement in the execution queue. The proposal will help market participants to continue to trade NMS Stocks within Price Bands in compliance with the Plan with certainty on how orders and trading interest will be treated. Reducing uncertainty regarding the treatment and priority of trading interest with the Price Bands should help encourage market participants to continue to provide liquidity during extraordinary market volatility.

The proposal will also ensure that orders in NMS Stocks are not routed to other exchanges in situations where an execution may occur outside Price Bands, and thus promotes just and equitable principles of trade and removes impediments to, and perfects the mechanism of, a free and open market and a national market system.

B. Self-Regulatory Organization's Statement on Burden on Competition

The Exchange does not believe that the proposed rule change will impose any burden on competition that is not necessary or appropriate in furtherance of the purposes of the Act. To the contrary, the proposal is specifically designed to ensure cooperation between and among all national securities exchanges and FINRA to promote uniform and effective regulation of the national market system. The proposal is specifically aimed at reducing competition among exchanges that is based on differences in regulations, otherwise known as regulatory arbitrage. In actuality, the proposal is pro-competitive because it promotes fair and orderly markets and investor protection, which in turn will restore investor confidence and attract more investors into U.S. equities markets.

C. Self-Regulatory Organization's Statement on Comments on the Proposed Rule Change Received From Members, Participants, or Others

Written comments were neither solicited nor received.

III. Date of Effectiveness of the Proposed Rule Change and Timing for Commission Action

The Exchange has filed the proposed rule change pursuant to Section 19(b)(3)(A)(iii) of the Act[23] and Rule 19b–4(f)(6) thereunder.[24] Because the proposed rule change does not: (i) Significantly affect the protection of investors or the public interest; (ii) impose any significant burden on competition; and (iii) become operative prior to 30 days from the date on which it was filed, or such shorter time as the Commission may designate, if consistent with the protection of investors and the public interest, the proposed rule change has become effective pursuant to Section 19(b)(3)(A) of the Act and Rule 19b–4(f)(6)(iii) thereunder.

A proposed rule change filed under Rule 19b–4(f)(6)[25] normally does not become operative prior to 30 days after the date of the filing. However, pursuant to Rule 19b4(f)(6)(iii),[26] the Commission may designate a shorter time if such action is consistent with the protection of investors and the public interest. The Exchange has asked the Commission to designate an operative date of April 8, 2013. The Commission believes that waiving the operative delay and designating April 8, 2013 as the operative date of the proposed rule change is consistent with the protection of investors and the public interest because such waiver would allow the proposed rule change to be operative on the initial date of Plan operations. Accordingly, the Commission hereby grants the Exchange's request and designates an operative date of April 8, 2013.[27]

At any time within 60 days of the filing of such proposed rule change, the Commission summarily may temporarily suspend such rule change if it appears to the Commission that such action is necessary or appropriate in the public interest, for the protection of investors, or otherwise in furtherance of the purposes of the Act.

IV. Solicitation of Comments

Interested persons are invited to submit written data, views, and arguments concerning the foregoing, including whether the proposed rule change is consistent with the Act. Comments may be submitted by any of the following methods:

Electronic Comments

- Use the Commission's Internet comment form (*http://www.sec.gov/rules/sro.shtml*); or
- Send an email to *rule-comments@sec.gov.* Please include File Number SR–BX–2013–025 on the subject line.

[20] *See* Section VIII of the Plan.

[21] 15 U.S.C. 78f (b).

[22] 15 U.S.C. 78f(b)(5).

[23] 15 U.S.C. 78s(b)(3)(A)(iii).

[24] 17 CFR 240.19b–4(f)(6). In addition, Rule 19b–4(f)(6) requires the Exchange to give the Commission written notice of the Exchange's intent to file the proposed rule change, along with a brief description and text of the proposed rule change, at least five business days prior to the date of filing of the proposed rule change, or such shorter time as designated by the Commission. The Exchange has satisfied this requirement.

[25] 17 CFR 240.19b–4(f)(6).

[26] 17 CFR 240.19b–4(f)(6)(iii).

[27] For purposes only of waiving the operative delay, the Commission has considered the proposed rule's impact on efficiency, competition, and capital formation. *See* 15 U.S.C. 78c(f).

Paper Comments

• Send paper comments in triplicate to Elizabeth M. Murphy, Secretary, Securities and Exchange Commission, 100 F Street NE., Washington, DC 20549–1090.

All submissions should refer to File Number SR–BX–2013–025. This file number should be included on the subject line if email is used. To help the Commission process and review your comments more efficiently, please use only one method. The Commission will post all comments on the Commission's Internet Web site (*http://www.sec.gov/rules/sro.shtml*). Copies of the submission, all subsequent amendments, all written statements with respect to the proposed rule change that are filed with the Commission, and all written communications relating to the proposed rule change between the Commission and any person, other than those that may be withheld from the public in accordance with the provisions of 5 U.S.C. 552, will be available for Web site viewing and printing in the Commission's Public Reference Room, 100 F Street NE., Washington, DC 20549, on official business days between the hours of 10:00 a.m. and 3:00 p.m. Copies of such filing also will be available for inspection and copying at the principal office of the Exchange. All comments received will be posted without change; the Commission does not edit personal identifying information from submissions. You should submit only information that you wish to make publicly available. All submissions should refer to File Number SR–BX–2013–025 and should be submitted on or before April 18, 2013.

For the Commission, by the Division of Trading and Markets, pursuant to delegated authority.[28]

Kevin M. O'Neill,

Deputy Secretary.

[FR Doc. 2013–07214 Filed 3–27–13; 8:45 am]

BILLING CODE 8011–01–P

[28] 17 CFR 200.30–3(a)(12).

SECURITIES AND EXCHANGE COMMISSION

[Release No. 34–69209; File No. SR–ICEEU–2013–05]

Self-Regulatory Organizations; ICE Clear Europe Limited; Notice of Filing Proposed Rule Changes Regarding Central Counterparty Resolution and Recovery Procedures

March 22, 2013.

Pursuant to Section 19(b)(1) of the Securities Exchange Act of 1934 (''Act''),[1] and Rule 19b–4 thereunder,[2] notice is hereby given that on March 7, 2013, ICE Clear Europe Limited (''ICE Clear Europe'') filed with the Securities and Exchange Commission (''Commission'') the proposed rule changes described in Items I, II, and III below, which Items have been prepared primarily by ICE Clear Europe. The Commission is publishing this notice to solicit comments on the proposed rule changes from interested persons.

I. Self-Regulatory Organization's Statement of the Terms of Substance of the Proposed Rule Change

ICE Clear Europe submits these proposed amendments to its Rules in order to adopt new provisions relating to clearinghouse resolution and recovery following the exhaustion of available resources after a Clearing Member default or a series of Clearing Member defaults. The amendments would, among other matters: (i) Establish a ''cooling-off period'' in cases of certain Clearing Member defaults that result in guaranty fund depletion, in which case the liability of Clearing Members for additional guaranty fund assessments would be capped for all defaults during that period; (ii) establish new procedures under which a Clearing Member may terminate its Clearing Membership, both in the ordinary course of business and during a cooling-off period, and related procedures for unwinding all positions of such a Clearing Member and capping its continuing liability to ICE Clear Europe, (iii) provide for ''haircutting'' of variation margin gains and other outgoing payments by ICE Clear Europe in situations when ICE Clear Europe determines, following a Clearing Member's default, that it is unlikely to have sufficient resources to make all such payments; (iv) permit ICE Clear Europe to temporarily suspend payments on cleared contracts when ICE Clear Europe determines that applying haircuts to Clearing Members' variation margin gains will not be sufficient to address a shortfall in resources, or when an auction of the positions of a defaulting Clearing Member has failed; (v) revise procedures for the termination of clearing and the wind-up of outstanding contracts of a particular type in the event the resources available to ICE Clear Europe to support those contracts are exhausted; (vi) eliminate rules permitting the forced allocation of credit default swap (''CDS'') positions to non-defaulting Clearing Members in the case of a failed default auction, and provide for the use of guaranty funds of Clearing Members that fail to participate in default auctions prior to the guaranty funds of other Clearing Members; and (vii) in general limit the effect of losses in certain product categories—*viz.,* Energy, CDS or foreign exchange (''FX'')—on ongoing clearing for other product categories.

[1] 15 U.S.C. 78s(b)(1).

[2] 17 CFR 240.19b–4.

II. Self-Regulatory Organization's Statement of the Purpose of, and Statutory Basis for, the Proposed Rule Change

In its filing with the Commission, ICE Clear Europe included statements concerning the purpose of and basis for the proposed rule changes, and discussed any comments it received on the proposed rule changes. The text of these statements may be examined at the places specified in Item IV below. ICE Clear Europe has prepared summaries, set forth in sections A, B, and C below, of the most significant aspects of these statements.[3]

A. Self-Regulatory Organization's Statement of the Purpose of, and Statutory Basis for, the Proposed Rule Change

i. Purpose

The proposed rule changes are intended to establish arrangements for the recovery and resolution of ICE Clear Europe's central counterparty services. The proposed Rule amendments are described in detail below.

In Part 1 of ICE Clear Europe's Rules (''Rules''), various conforming changes have been made to definitions, including the definitions of ''FX Default Amount'', ''Termination Close-Out Deadline Date'', ''Termination Close-Out Time'' and ''Termination Date.'' Rule 105(c) (entitled ''Termination'') has been revised to conform to new termination provisions in Part 9 of the Rules, and to clarify the use of the term ''Termination Notice Time'' in connection with a termination of ICE Clear Europe's services. A new

[3] The Commission has modified the text of the summaries prepared by ICEEU.

subsection (f) has been added to Rule 110 which permits ICE Clear Europe to delay making outgoing variation margin payments on an intra-day basis in certain circumstances when a Clearing Member has failed to make a variation margin payment to the Clearing House on such day.

In Rule 209 (entitled ''Termination of Clearing Membership''), certain provisions addressing the termination of Clearing Membership and a default by ICE Clear Europe and the consequences thereof have been moved to Rules 912 and Rule 918, as discussed below. Various conforming changes are made in Part 4 of the Rules.

Part 9 of the Rules has been revised to incorporate the new resolution and recovery provisions discussed above. In addition, several provisions that were previously in other parts of the Rules have been moved into Part 9 to consolidate the relevant provisions. Rule 905, which permitted the forced allocation of CDS contracts to Clearing Members in the event of a failed auction or other inability to close out or transfer relevant positions, has been removed following extensive discussions with Clearing Members. ICE Clear Europe believes that the risks of this scenario are now addressed through the haircutting, suspension and termination procedures discussed below. Various other conforming changes are made in Rules 905 and 906.

Former Rule 1103 (entitled ''Application of Assets upon Event of Default'') has been moved to Rule 908. In addition to various conforming changes, new Rule 908 also clarifies the application of guaranty fund contributions and other resources depending on the product categories in which a defaulting Clearing Member acted. New Rule 908(i) provides that, if a non-defaulting Clearing Member fails to participate in a default auction or does not comply with its obligations under any such auction, its guaranty fund contributions will be applied prior to the guaranty fund contributions of other non-defaulting Clearing Members.

Former Rules 1105 (entitled ''Powers of Assessment: Energy''), 1106 (entitled ''Powers of Assessment: CDS'') and 1107 (entitled ''Powers of Assessment: FX'') have been moved to new Rules 909, 910 and 911, respectively. In addition to certain conforming changes, new Rules 909, 910 and 911 have been revised to clarify the timing under which ICE Clear Europe may call for assessments, the maximum assessment liability of Clearing Members acting in each product category, and the manner in which any assessments called by ICE Clear Europe but not yet used will be held.

Certain provisions addressing the termination of transactions in the event of an ICE Clear Europe insolvency or other default (formerly in Rule 209) have been moved to new Rule 912, which also includes certain conforming changes and a clarification relating to a default that affects some but not all product categories.

New Rule 913 contains various new definitions used in the haircutting provisions in Rule 914, the suspension provisions of Rule 915 and the termination provisions of Rule 916. New Rule 914 establishes the haircutting mechanism. The core of Rule 914 is a procedure for haircutting (*i.e.,* reducing) the variation margin and certain other contractual payments ICE Clear Europe owes to Clearing Members for a contract category, to the extent of a shortfall in available resources for that contract category, when ICE Clear Europe issues a ''Haircutting Determination.'' Such a determination may be made when certain conditions are satisfied:

(i) One or more Clearing Member defaults have occurred but ICE Clear Europe has not yet declared and either paid or submitted a claim in respect of all net sums due to or from the defaulter in respect of its proprietary account and all of its customer accounts; and

(ii) ICE Clear Europe determines, based on one of several relevant tests, that its available resources are insufficient to pay all relevant outward variation margin and contractual payments and/or its available resources would be insufficient to cover the losses or shortfalls to the Clearing House from the close out of the defaulter's positions.

A Haircutting Determination will not be made if: (i) A determination to suspend clearing has been made under Rule 915; (ii) clearing in the relevant contracts is being terminated under Rule 916 or a Clearing House insolvency; or (iii) a failure to pay has occurred. In the event of such a determination, on the day during the ''Loss Distribution Period'' specified by ICE Clear Europe, the net amount owed on such day to each Clearing Member that is deemed to be a ''cash gainer'' in respect of an account class (*i.e.,* a member that would otherwise be entitled to receive variation margin or other payments in respect of such account class) will be subject to a percentage haircut. Corresponding adjustments are also made for ''cash losers'' (*i.e.,* those who owe the Clearing House) to the extent amounts previously owed to them have received a haircut.

New Rule 915 authorizes ICE Clear Europe to make a ''Suspension Determination'' for a contract category when the following conditions occur: (i) ICE Clear Europe's obligations to meet variation margin payments or the cost of auctioning off the positions of a defaulting Clearing Member will not be satisfied through the haircutting procedure of Rule 914; (ii) following the declaration of all net sums in respect of a particular default, ICE Clear Europe might be rendered insolvent if it does not suspend clearing; or (iii) an auction in a relevant contract category has failed. In such circumstances, during the suspension period, which is initially up to 2 business days, payments in respect of contracts in the suspended category will be suspended.

New Rule 916 permits ICE Clear Europe to terminate a set of contracts if, at the end of a suspension period under Rule 915, the conditions for suspension are still satisfied, or if ICE Clear Europe determines that, because of the termination of Clearing Members, there will be insufficient Clearing Members for clearing of the relevant contract category to remain viable. Rule 916 provides a procedure for determining the termination price for all contracts in a particular set. To the extent the termination value payable by ICE Clear Europe for the terminated contract set exceeds available resources for that contract set, ICE Clear Europe's obligations will be limited to the available resources. This will permit clearing activity to continue in other contract categories.

Rule 917 implements a ''cooling-off period'' concept. A cooling-off period is triggered by certain defaults that result in a guaranty fund assessment or a series of defaults resulting in depletion of the guaranty fund. During a cooling-off period, the assessment liability of a Clearing Member is capped with respect to all defaults occurring during the period.

Rule 918 revises the procedures for Clearing Members that wish to terminate their Clearing Membership (including during a cooling-off period). Clearing members that have submitted a termination notice are required to close out their open contracts by a specified deadline. Rule 918 also provides for the calculation and payment of a net amount to or from the terminating Clearing Member for each of its accounts in respect of the close out of all of its positions. Terminating Clearing Members are not responsible for additional guaranty fund contributions for defaults occurring after the effective date of their termination.

Various conforming changes are also made to Part 11 of the Rules. Rule 1102(g), addressing the return of the

guaranty fund, has been revised to conform to the new termination provisions in Rule 918. Former Rule 1104, which addresses the use of guaranty fund contributions, has been redesignated as Rule 1103. Other conforming changes have been made in parts 12 and 15 of the Rules, as well.

ii. Statutory Basis

ICE Clear Europe believes that the proposed rule changes are consistent with the requirements of Section 17A [4] of the Act and the regulations thereunder applicable to it, in particular, that the rules of a clearing agency be designed to promote the prompt and accurate clearance and settlement of securities transactions and, to the extent applicable, derivatives agreements, contracts, and transactions, as well as to assure the safeguarding of securities and funds which are in the custody or control of the clearing agency or for which it is responsible.[5] ICE Clear Europe has developed the new resolution and recovery procedures in response to issues raised by the Bank of England as overseer of its payment arrangements, and following extensive consultation with the Bank of England, the Financial Services Authority, and Clearing Members. Specifically, ICE Clear Europe believes that the proposed rule changes will enhance its stability following the default of one or more Clearing Members, and will reduce the risk of its failure or insolvency. The revisions will, in particular, facilitate the orderly wind-down or termination of contracts affected by a default, and will minimize the effect on other categories of contracts, for which clearing should be able to continue. Further, ICE Clear Europe, as a clearing house for multiple products, also believes that the changes will reduce the risk of a systemic problem in one cleared market causing contagion or creating risks for other cleared markets. The amendments also provide clearer limitations on the liability of Clearing Members for assessments following defaults, and a clearer procedure for termination of Clearing Membership.

B. Self-Regulatory Organization's Statement on Burden on Competition

ICE Clear Europe does not believe the proposed rule changes would have any impact, or impose any burden, on competition.

[4] 15 U.S.C. 78q–1.

[5] 15 U.S.C. 78q–1(b)(3)(F).

C. Self-Regulatory Organization's Statement on Comments on the Proposed Rule Change Received From Members, Participants or Others

ICE Clear Europe has solicited written comments relating to the proposed rule change, but has not received any written comments to date. ICE Clear Europe will notify the Commission of any written comments received by ICE Clear Europe.

III. Date of Effectiveness of the Proposed Rule Change and Timing for Commission Action

Within 45 days of the date of publication of this notice in the **Federal Register** or within such longer period up to 90 days (i) as the Commission may designate if it finds such longer period to be appropriate and publishes its reasons for so finding, or (ii) as to which the self-regulatory organization consents, the Commission will:

(A) by order approve or disapprove such proposed rule change, or

(B) institute proceedings to determine whether the proposed rule change should be disapproved.

IV. Solicitation of Comments

Interested persons are invited to submit written data, views, and arguments concerning the foregoing, including whether the proposed rule changes are consistent with the Act. Comments may be submitted by any of the following methods:

Electronic Comments

- Use the Commission's Internet comment form (*http://www.sec.gov/rules/sro.shtml*) or
- Send an email to *rule-comments@sec.gov*. Please include File Number SR–ICEEU–2013–05 on the subject line.

Paper Comments

- Send paper comments in triplicate to Elizabeth M. Murphy, Secretary, Securities and Exchange Commission, 100 F Street NE., Washington, DC 20549–1090.

All submissions should refer to File Number SR–ICEEU–2013–05. This file number should be included on the subject line if email is used. To help the Commission process and review your comments more efficiently, please use only one method of submission. The Commission will post all comments on the Commission's Internet Web site (*http://www.sec.gov/rules/sro.shtml*). Copies of the submission, all subsequent amendments, all written statements with respect to the proposed rule change that are filed with the Commission, and all written communications relating to the proposed rule change between the Commission and any person, other than those that may be withheld from the public in accordance with the provisions of 5 U.S.C. 552, will be available for Web site viewing and printing in the Commission's Public Reference Section, 100 F Street NE., Washington, DC 20549, on official business days between the hours of 10:00 a.m. and 3:00 p.m. Copies of such filings will also be available for inspection and copying at ICE Clear Europe's principal office and on ICE Clear Europe's Web site at *https://www.theice.com/publicdocs/regulatory_filings/ICEU_SEC_030613.pdf*.

All comments received will be posted without change; the Commission does not edit personal identifying information from submissions. You should submit only information that you wish to make available publicly. All submissions should refer to File Number SR–ICEEU–2013–05 and should be submitted on or before April 18, 2013.

For the Commission, by the Division of Trading and Markets, pursuant to delegated authority.[6]

Kevin M. O'Neill,

Deputy Secretary.

[FR Doc. 2013–07177 Filed 3–27–13; 8:45 am]

BILLING CODE 8011–01–P

[6] 17 CFR 200.30–3(a)(12).

SECURITIES AND EXCHANGE COMMISSION

[Release No. 34–69220; File No. SR–CBOE–2013–040]

Self-Regulatory Organizations; Chicago Board Options Exchange, Incorporated; Notice of Filing and Immediate Effectiveness of a Proposed Rule Change Relating to Complex Orders and Mini-Options

March 22, 2013.

Pursuant to Section 19(b)(1) of the Securities Exchange Act of 1934 (the ''Act''),[1] and Rule 19b–4 thereunder,[2] notice is hereby given that on March 22, 2013, Chicago Board Options Exchange, Incorporated (the ''Exchange'' or ''CBOE'') filed with the Securities and Exchange Commission (the ''Commission'') the proposed rule change as described in Items I and II below, which Items have been prepared by the Exchange. The Commission is publishing this notice to solicit

[1] 15 U.S.C. 78s(b)(1).

[2] 17 CFR 240.19b–4.

comments on the proposed rule change from interested persons.

I. Self-Regulatory Organization's Statement of the Terms of the Substance of the Proposed Rule Change

The Exchange proposes to amend its rules related to complex orders. The text of the proposed rule change is also available on the Exchange's Web site (*http://www.cboe.org/legal*) at the Exchange's Office of the Secretary, and at the Commission's Public Reference Room.

II. Self-Regulatory Organization's Statement of the Purpose of, and Statutory Basis for, the Proposed Rule Change

In its filing with the Commission, the Exchange included statements concerning the purpose of and basis for the proposed rule change and discussed any comments it received on the proposed rule change. The text of these statements may be examined at the places specified in Item IV below. The Exchange has prepared summaries, set forth in sections A, B, and C below, of the most significant aspects of such statements.

A. Self-Regulatory Organization's Statement of the Purpose of, and Statutory Basis for, the Proposed Rule Change

1. Purpose

CBOE recently amended its rules to allow for the listing of mini-options on SPDR S&P 500 (''SPY''), Apple, Inc. (''AAPL''), SPDR Gold Trust (''GLD''), Google Inc. (''GOOG'') and Amazon.com Inc. (''AMZN'').[3] Mini-option trading commenced on March 18, 2013. Whereas standard option contracts represent a deliverable of 100 shares of an underlying security, mini-options contracts represent a deliverable of 10 shares. Except for the difference in the number of deliverable shares, mini-options have the same terms and contract characteristics as regular-sized equity and ETF options, including exercise style. Accordingly, the Exchange noted in its original mini-option filing that Exchange rules that apply to the trading of standard option contracts would apply to mini-option contracts as well.[4] The Exchange proposes to amend Rule 6.53C (Complex Orders on the Hybrid System) and Rule 6.80 (Definitions) to provide that for the purpose of applying the permissible ratios to complex orders comprised of both mini-option contracts and standard option contracts, ten (10) mini option contracts will represent one (1) standard option contract.

By way of background, CBOE Rule 6.53C governs Complex Orders on the Hybrid System and CBOE Rule 6.80 lists definitions applicable to intermarket linkage.

Particularly, ''complex order'' in Rule 6.53C(a)(1) and ''complex trade'' in Rule 6.80(4)(i) (collectively referred to as ''complex orders'')[5] is defined as any order involving the execution of two or more different options series in the same underlying security occurring at or near the same time in a ratio that is equal to or greater than one-to-three (.333) and less than or equal to three-to-one (3.00).

The Exchange notes that the abovementioned permissible ratios were established to ensure that only complex orders that seek to achieve legitimate investment strategies are afforded certain benefits. Particularly, since compliance with trade-through rules may impede a market participant's ability to achieve the legitimate investment strategies that complex orders facilitate, an exception from the prohibition on trade-throughs is provided for any transaction that was effected as a portion of a legitimate complex order. Requiring a meaningful relationship between the different legs of a complex order prevents market participants from taking advantage of these orders to circumvent the otherwise applicable trade-through rules (e.g., preventing the execution of a complex order where one leg consists of 100 standard options (i.e., 10,000 shares) and another leg consists of only 1 standard option (i.e., 100 shares).

The Exchange acknowledges that in accordance with the provisions of Rule 6.53C(a)(1) and Rule 6.80(4)(i), one leg of a complex order may consist of mini-option contract(s) and the other leg of the order may consist of standard option contract(s), so long as the underlying security is the same and the transaction does not violate the permissible ratios set forth in the rules (i.e., ratio greater or equal to one-to-three or less or equal to three-to-one). The Exchange notes the definition of a complex order in Rule 6.53C and Rule 6.80 was drafted at a time in which only option contracts with a deliverable of 100 shares was contemplated. Therefore, the rules do not address how the permissible ratios would be scaled in the event an option with a non-standard deliverable becomes available for trading. Accordingly, the Exchange proposes to amend the definition of ''complex orders'' in Rule 6.53C(a)(1) and Rule 6.80(4)(i) to specify that for the purpose of applying the aforementioned ratios to complex orders comprised of mini-option contracts and standard option contracts, ten (10) mini option contracts will represent one (1) standard option contract. Moreover, the Exchange seeks to clarify that these permissible ratios represent the total number of shares of the underlying stock in the mini-option leg to the total number of shares of the underlying stock in the standard option leg. An example of a permissible complex order involving mini-options and standard options would be an order in which leg one consists of thirty (30) mini-options (i.e., 300 shares) and leg two consists of one (1) standard option (i.e., 100 shares) in the same underlying security (i.e., a ratio equal to 3.0). Another example of a permissible complex order would be an order in which leg one consists of ten (10) mini-options (i.e., 100 shares) and leg two consists of one (1) standard option (i.e., 100 shares) in the same underlying security (i.e., a ratio equal to one-to-one). The proposed clarification will reduce potential confusion for investors when trading mini-options. The proposed change also ensures that the principle behind the permissible ratios (i.e., to provide a meaningful relationship between the legs of complex orders) is maintained for mini-options.

2. Statutory Basis

The Exchange believes the proposed rule change is consistent with the Act and the rules and regulations thereunder, including the requirements of Section 6(b) of the Act.[6] In particular, the Exchange believes the proposed rule change is consistent with the Section 6(b)(5)[7] requirements that the rules of an exchange be designed to promote just and equitable principles of trade, to prevent fraudulent and manipulative acts, to foster cooperation and coordination with persons engaged in facilitating transactions in securities, to remove impediments to and to perfect the mechanism for a free and open market and a national market system, and, in general, to protect investors and the public interest.

Specifically, the Exchange believes that investors and market participants benefit from being permitted to execute

[3] *See* Securities Exchange Act Release No. 68656 (January 15, 2013), 78 FR 4526 (January 22, 2013) (Notice of Filing and Immediate Effectiveness of a Proposed Rule Change to List and Trade Option Contracts Overlying 10 Shares of Certain Securities) (SR–CBOE–2013–001).

[4] *Id.*

[5] The definitions of ''complex order'' in Rule 6.53C(a)(1) and ''complex trade'' in Rule 6.80(4)(i) are substantially identical.

[6] 15 U.S.C. 78f(b).

[7] 15 U.S.C. 78f(b)(5).

complex orders in mini-options because it allows them to take advantage of legitimate investment strategies. Also, the Exchange believes the proposed rule change will avoid investor confusion if both standard options and mini-options on the same underlying security are permitted to trade as complex orders. The Exchange further believes that specifying that for the purpose of applying the permissible ratios to complex orders comprised of mini-option contracts and standard option contracts, ten (10) mini option contracts will represent one (1) standard option contract would lessen investor and marketplace confusion. Particularly, the Exchange believes that the absence of such an amendment could lead to investor confusion about how complex orders involving mini-option contracts trade. Also, maintaining the permissible ratios that are applicable to standard options in proportion for mini-options ensures that the principle behind the permissible ratios (i.e., to provide a meaningful relationship between the legs of complex orders) is maintained for mini-options, which promotes just and equitable principles of trade.

Finally, the Exchange believes that the proposed rule change is designed to not permit unfair discrimination among market participants as all market participants may participate in complex orders involving mini-options.

B. Self-Regulatory Organization's Statement on Burden on Competition

This proposed rule change does not impose any burden on competition that is not necessary or appropriate in furtherance of the purposes of the Act. Specifically, since mini-options are permitted on multiply-listed classes, other exchanges that have received approval to trade mini-options will have the opportunity to similarly amend their complex order rules to clarify and accommodate complex orders in mini-option classes. Moreover, because all Trading Permit Holders may participate in complex orders involving mini-options, the rule change does not permit unfair discrimination and does not impose a burden on Trading Permit Holders.

C. Self-Regulatory Organization's Statement on Comments on the Proposed Rule Change Received From Members, Participants, or Others

The Exchange neither solicited nor received comments on the proposed rule change.

III. Date of Effectiveness of the Proposed Rule Change and Timing for Commission Action

Because the foregoing proposed rule change does not:

(i) Significantly affect the protection of investors or the public interest;

(ii) impose any significant burden on competition; and

(iii) become operative for 30 days from the date on which it was filed, or such shorter time as the Commission may designate, it has become effective pursuant to Section 19(b)(3)(A) [8] of the Act and Rule 19b–4(f)(6) [9] thereunder.

A proposed rule change filed under Rule 19b–4(f)(6) of the Act [10] normally does not become operative prior to 30 days after the date of the filing. However, pursuant to Rule 19b–4(f)(6)(iii) of the Act,[11] the Commission may designate a shorter time if such action is consistent with the protection of investors and the public interest. The Exchange has requested the Commission to waive the 30-day operative delay so that the proposal may become operative immediately upon filing. In January 2013, the Exchange filed a proposed rule change to amend its rules to list and trade certain mini-options contracts on the Exchange, and represented in that filing that the Exchange's rules that apply to the trading of standard options contracts would apply to mini-options contracts.[12] The Exchange believes that waiver of the 30-day operative delay is consistent with the protection of investors and the public interest because such waiver would minimize confusion among market participants about how complex orders and stock-options orders involving mini-options contracts will trade.[13]

The Commission believes that waiving the 30-day operative delay is consistent with the protection of investors and the public interest. Such waiver would allow the Exchange to implement the proposed rule change immediately, thereby mitigating potential investor confusion as to how complex orders and stock options orders involving mini-options contracts will trade. For this reason, the Commission hereby waives the 30-day operative delay and designates the proposed rule change to be operative upon filing with the Commission.[14]

The Exchange represented that it began trading in mini-options contracts on March 18, 2013. The Commission notes that this proposed rule change was filed on March 22, 2013, and, therefore, pursuant to Rule 19b–4(f)(6), waiver of the 30-day operative delay renders this proposed rule change effective upon the day that it was filed, March 22, 2013.

At any time within 60 days of the filing of such proposed rule change, the Commission summarily may temporarily suspend such rule change if it appears to the Commission that such action is necessary or appropriate in the public interest, for the protection of investors, or otherwise in furtherance of the purposes of the Act. If the Commission takes such action, the Commission shall institute proceedings to determine whether the proposed rule change should be approved or disapproved.

IV. Solicitation of Comments

Interested persons are invited to submit written data, views, and arguments concerning the foregoing, including whether the proposed rule change is consistent with the Act. Comments may be submitted by any of the following methods:

Electronic Comments

- Use the Commission's Internet comment form (*http://www.sec.gov/rules/sro.shtml*); or
- Send an email to *rule-comments@sec.gov.* Please include File Number SR–CBOE–2013–040 on the subject line.

Paper Comments

- Send paper comments in triplicate to Elizabeth M. Murphy, Secretary, Securities and Exchange Commission, 100 F Street NE., Washington, DC 20549–1090.

All submissions should refer to File Number SR–CBOE–2013–040. This file number should be included on the subject line if email is used. To help the Commission process and review your comments more efficiently, please use only one method. The Commission will post all comments on the Commission's Internet Web site (*http://www.sec.gov/rules/sro.shtml*). Copies of the submission, all subsequent amendments, all written statements

[8] 15 U.S.C. 78s(b)(3)(A).

[9] 17 CFR 240.19b–4(f)(6). In addition, Rule 19b–4(f)(6) requires a self-regulatory organization to give the Commission written notice of its intent to file the proposed rule change at least five business days prior to the date of the filing of the proposed rule change, or such shorter time as designated by the Commission. The Exchange has satisfied this requirement.

[10] 17 CFR 240.19b–4(f)(6).

[11] 17 CFR 240.19b–4(f)(6)(iii).

[12] *See supra* note 3.

[13] *See* SR–CBOE–2013–040, Item 7.

[14] For purposes only of waiving the 30-day operative delay, the Commission has also considered the proposed rule's impact on efficiency, competition, and capital formation. *See* 15 U.S.C. 78c(f).

with respect to the proposed rule change that are filed with the Commission, and all written communications relating to the proposed rule change between the Commission and any person, other than those that may be withheld from the public in accordance with the provisions of 5 U.S.C. 552, will be available for Web site viewing and printing in the Commission's Public Reference Room, 100 F Street NE., Washington, DC 20549–1090, on official business days between the hours of 10:00 a.m. and 3:00 p.m. Copies of such filing also will be available for inspection and copying at the principal office of the Exchange. All comments received will be posted without change; the Commission does not edit personal identifying information from submissions. You should submit only information that you wish to make available publicly. All submissions should refer to File Number SR–CBOE–2013–040, and should be submitted on or before April 18, 2013.

For the Commission, by the Division of Trading and Markets, pursuant to delegated authority.[15]

Kevin M. O'Neill,

Deputy Secretary.

[FR Doc. 2013–07222 Filed 3–27–13; 8:45 am]

BILLING CODE 8011–01–P

[15] 17 CFR 200.30–3(a)(12).

DEPARTMENT OF STATE

[Public Notice 8261]

Culturally Significant Objects Imported for Exhibition Determinations: ''Hans Richter: Encounters''

ACTION: Notice, correction.

SUMMARY: On March 12, 2013, notice was published on page 15802 of the **Federal Register** (volume 78, number 48) of determinations made by the Department of State pertaining to the exhibit ''Hans Richter: Encounters.'' The referenced notice is corrected to accommodate an additional object to be included in the exhibition. Pursuant to the authority vested in me by the Act of October 19, 1965 (79 Stat. 985; 22 U.S.C. 2459), Executive Order 12047 of March 27, 1978, the Foreign Affairs Reform and Restructuring Act of 1998 (112 Stat. 2681, *et seq.;* 22 U.S.C. 6501 note, *et seq.*), Delegation of Authority No. 234 of October 1, 1999, and Delegation of Authority No. 236–3 of August 28, 2000 (and, as appropriate, Delegation of Authority No. 257 of April 15, 2003), I hereby determine that the additional object to be included in the exhibition ''Hans Richter: Encounters,'' imported from abroad for temporary exhibition within the United States, is of cultural significance. The additional object is imported pursuant to a loan agreement with the foreign owner or custodian. I also determine that the exhibition or display of the additional exhibit object at The Los Angeles County Museum of Art in Los Angeles, California from on or about May 5, 2013, until on or about September 2, 2013, and at possible additional exhibitions or venues yet to be determined, is in the national interest. I have ordered that Public Notice of these Determinations be published in the **Federal Register**.

FOR FURTHER INFORMATION CONTACT: For further information, including a list of the exhibit objects that includes this additional object, contact Ona M. Hahs, Attorney-Adviser, Office of the Legal Adviser, U.S. Department of State (telephone: 202–632–6473). The mailing address is U.S. Department of State, SA–5, L/PD, Fifth Floor (Suite 5H03), Washington, DC 20522–0505.

Dated: March 21, 2013.

Adam Ereli,

Principal Deputy Assistant Secretary, Bureau of Educational and Cultural Affairs, Department of State.

[FR Doc. 2013–07256 Filed 3–27–13; 8:45 am]

BILLING CODE 4710–05–P

DEPARTMENT OF STATE

[Public Notice 8260]

U.S. Department of State Advisory Committee on Private International Law (ACPIL): Public Meeting on Electronic Commerce

The Office of the Assistant Legal Adviser for Private International Law, Department of State, gives notice of a public meeting to discuss a Note by the Secretariat of the United Nations Commission on International Trade Law (UNCITRAL) containing draft provisions on electronic transferable records. The public meeting will take place on Tuesday, April 30, 2013 from 10 a.m. until 2 p.m. EDT in Room 1107 of the Department of State's Harry S Truman Building. This is not a meeting of the full Advisory Committee.

In response to a request from the 46th Session of UNCITRAL's Working Group IV (electronic commerce), the UNCITRAL Secretariat has prepared draft provisions on electronic transferable records, which are presented for discussion purposes in the form of a model law. The draft provisions will be made available as Working Paper 122 on the UNCITRAL Web site, in the list of documents provided for the 47th Session of Working Group IV and will be available via the following link: (*http://www.uncitral.org/uncitral/en/commission/working_groups/4Electronic_Commerce.html*). This Working Paper will be discussed May 13–17, 2013, at the 47th Session of Working Group IV.

The purpose of the public meeting is to obtain the views of concerned stakeholders on these topics in advance of the meeting of Working Group IV.

Prior to the public meeting, we will send out—to all those who indicate that they intend to attend the meeting or participate by telephone, or who otherwise wish to comment—the documents prepared for this meeting. Those who cannot attend but wish to comment are welcome to do so by email to Michael Coffee at *coffeems@state.gov.*

Time and Place: The meeting will take place in Room 1107 of the Department's Harry S Truman Building, 2201 C Street NW., Washington, DC 20520 from 10 a.m. until 2 p.m. EDT. Participants should plan to arrive by 9:30 a.m. for visitor screening. If you are unable to attend the public meeting and would like to participate from a remote location, teleconferencing will be available.

Public Participation: This meeting is open to the public, subject to the capacity of the meeting room. Please provide your full name and contact information if you are planning on attending in person. Access to the building is strictly controlled. For pre-clearance purposes, those planning to attend should phone Tricia Smeltzer (202–776–8423) or Niesha Toms (202–776–8420) and provide your full name, address, date of birth, citizenship, driver's license or passport number, and email address. This will greatly facilitate entry into the building. Participants will be met inside the diplomatic entrance at C Street and, once badges are obtained, escorted to the meeting room. A member of the public needing reasonable accommodation should advise Ms. Smeltzer or Ms. Toms not later than April 23, 2013. Requests made after that date will be considered, but might not be able to be fulfilled. If you would like to participate by telephone, please contact Ms. Smeltzer or Ms. Toms to obtain the call-in number and other information.

Data from the public is requested pursuant to Public Law 99–399 (Omnibus Diplomatic Security and Antiterrorism Act of 1986), as amended; Public Law 107–56 (USA PATRIOT

Act); and Executive Order 13356. The purpose of the collection is to validate the identity of individuals who enter Department facilities. The data will be entered into the Visitor Access Control System (VACS–D) database. Please see the Privacy Impact Assessment for VACS–D at *http://www.state.gov/documents/organization/100305.pdf* for additional information.

Dated: March 20, 2013.

Michael S. Coffee,

Attorney-Adviser, Office of Private International Law, Office of Legal Adviser, Department of State.

[FR Doc. 2013–07255 Filed 3–27–13; 8:45 am]

BILLING CODE 4710–08–P

DEPARTMENT OF TRANSPORTATION

Federal Aviation Administration

Airworthiness Approval for Aircraft Forward-Looking Windshear and Turbulence Radar Systems

AGENCY: Federal Aviation Administration (FAA), DOT.

ACTION: Request for comment.

SUMMARY: This notice announces the proposed development of an advisory circular addressing airworthiness approval for aircraft forward-looking windshear and turbulence radar systems. The planned advisory circular would address installation guidance for these functionalities in Technical Standard Order (TSO)-C63d, *Airborne Weather Radar Equipment.* The objective is to leverage the installation specific guidance from the System Level Requirements (SLR) 10.2 recommended by the Forward-Looking Windshear Detection System Working Group and the generic issue papers on turbulence detection to publish an advisory circular. (In order for the public to comment on our proposal, they will need to have access to SLR 10.2 and the issue papers.)

DATES: Request comments and interest in participating by April 29, 2013.

FOR FURTHER INFORMATION CONTACT: Mr. Lee Nguyen, AIR–130, Federal Aviation Administration, 470 L'Enfant Plaza, Suite 4102, Washington, DC 20024. Telephone (202) 385–4676, fax (202) 385–4651, email to: *lee.nguyen@faa.gov.*

SUPPLEMENTARY INFORMATION:

Background

Use of radar for forward-looking windshear and turbulence detection was previously addressed as additional functionality added to TSO–C63c, *Airborne Weather and Ground Mapping Pulsed Radars.* The FAA and industry collaborated on the end-to-end requirements for the design and installation of the forward-looking windshear detection system with SLR 10.2 and the turbulence detection function issue papers. With the publication of TSO–C63d, which added the forward-looking windshear and turbulence detection requirements, the design requirements are deleted from the TSO functionality.

Issue

The design requirements are standardized and incorporated in TSO–C63d; however, use of the SLR 10.2 documentation and the associated issue papers were not eliminated because guidance is still needed for the installation and airworthiness certification of these systems, which is not covered by TSO–C63d.

Proposal

The FAA proposes developing an advisory circular to address installation guidance for TSO–C63d predictive windshear and turbulence detection equipment. The goal is to combine the installation specific guidance from SLR 10.2 and existing generic issue papers into an approved coordinated advisory circular. Additionally, the FAA would update the existing guidance as appropriate, based on experience with the existing guidance and industry input.

Comment and Participation Invited

The FAA requests comment on the proposed AC to provide installation guidance for forward-looking windshear and turbulence detection radar systems. If the FAA proceeds with development of the AC, we envision collaborating with industry when drafting the guidance. As such, we request interested participants in a working group to develop the AC to respond to the person listed in the ''For Further Information Contact'' paragraph.

Issued in Washington, DC, on March 25, 2013.

Susan J. M. Cabler,

Assistant Manager, Aircraft Engineering Division, Aircraft Certification Service.

[FR Doc. 2013–07227 Filed 3–27–13; 8:45 am]

BILLING CODE 4910–13–P

DEPARTMENT OF TRANSPORTATION

Federal Highway Administration

Buy America Waiver Notification

AGENCY: Federal Highway Administration (FHWA), DOT.

ACTION: Notice.

SUMMARY: This notice provides information regarding the FHWA's finding that a Buy America waiver is appropriate for the use of non-domestic iron and steel products in GenSet diesel engine and air compressor for a Congestion Mitigation and Air Quality (CMAQ) project in the Commonwealth of Kentucky.

DATES: The effective date of the waiver is March 29, 2013.

FOR FURTHER INFORMATION CONTACT: For questions about this notice, please contact Mr. Gerald Yakowenko, FHWA Office of Program Administration, (202) 366–1562, or via email at *gerald.yakowenko@dot.gov.* For legal questions, please contact Mr. Michael Harkins, FHWA Office of the Chief Counsel, (202) 366–4928, or via email at *michael.harkins@dot.gov.* Office hours for the FHWA are from 8:00 a.m. to 4:30 p.m., e.t., Monday through Friday, except Federal holidays.

SUPPLEMENTARY INFORMATION:

Electronic Access

An electronic copy of this document may be downloaded from the **Federal Register's** home page at: *http://www.archives.gov* and the Government Printing Office's database at: *http://www.access.gpo.gov/nara.*

Background

The FHWA's Buy America policy in 23 CFR 635.410 requires a domestic manufacturing process for any steel or iron products (including protective coatings) that are permanently incorporated in a Federal-aid construction project. The regulation also provides for a waiver of the Buy America requirements when the application would be inconsistent with the public interest or when satisfactory quality domestic steel and iron products are not sufficiently available. This notice provides information regarding the FHWA's finding that a Buy America waiver is appropriate to use some non-domestic iron and steel products in GenSet diesel engine and air compressor for CMAQ project in the Commonwealth of Kentucky.

In accordance with Division A, section 122 of the ''Consolidated and Further Continuing Appropriations Act, 2012'' (Pub. L. 112–284), the FHWA published a notice of intent to issue a waiver on its Web site for iron and steel products in GenSet diesel engine and air compressor (*http://www.fhwa.dot.gov/construction/contracts/waivers.cfm?id=79*) on August 22nd. The FHWA received five comments in response to the publication. Two

respondents, Mouhamad A. Naboulsi and James Agalzoff, opposed the waiver request. One comment simply stated that American products should be used on America projects. The FHWA agrees with this sentiment and intends to enforce Buy America as required by law. However, in this case, Kentucky has not been able to find these products containing 100 percent American iron and steel, even though the engines and compressors themselves are made in America. The other commenter opposed the waiver because foreign parts will continue to be used if waivers continue to be granted. We agree that the industry may eventually decide to start producing these parts if the industry finds it worthwhile to do so. However, the FHWA cannot continue to hold this project based on the hope that the American industry may someday produce these parts. Three respondents, Jeff Amburn, Tony E. Stauffer, and Melinda Mcpeek, on behalf of their corporations, expressed support for the waiver request. During the 15-day comment period, the FHWA conducted additional nationwide review to locate potential domestic manufacturers of the iron and steel products in GenSet diesel engine and air compressor for CMAQ project in the Commonwealth of Kentucky. Based on all the information available to the agency, the FHWA concludes that there are no domestic manufacturers of the iron and steel products in GenSet diesel engine and air compressor for CMAQ project in the Commonwealth of Kentucky.

In accordance with the provisions of section 117 of the SAFETEA–LU Technical Corrections Act of 2008 (Pub. L. 110–244, 122 Stat. 1572), the FHWA is providing this notice as its finding that a waiver of Buy America requirements is appropriate. The FHWA invites public comment on this finding for an additional 15 days following the effective date of the finding. Comments may be submitted to the FHWA's Web site via the link provided to the Kentucky waiver page noted above.

(Authority: 23 U.S.C. 313; Pub. L. 110–161, 23 CFR 635.410)

Issued on: March 21, 2013.

Victor M. Mendez,

Federal Highway Administrator.

[FR Doc. 2013–07206 Filed 3–27–13; 8:45 am]

BILLING CODE 4910–22–P

DEPARTMENT OF TRANSPORTATION

Maritime Administration

[Docket No. MARAD–2013 0034]

Requested Administrative Waiver of the Coastwise Trade Laws: Vessel NAUTILE; Invitation for Public Comments

AGENCY: Maritime Administration, Department of Transportation.

ACTION: Notice.

SUMMARY: As authorized by 46 U.S.C. 12121, the Secretary of Transportation, as represented by the Maritime Administration (MARAD), is authorized to grant waivers of the U.S.-build requirement of the coastwise laws under certain circumstances. A request for such a waiver has been received by MARAD. The vessel, and a brief description of the proposed service, is listed below.

DATES: Submit comments on or before April 29, 2013.

ADDRESSES: Comments should refer to docket number MARAD–2013–0034. Written comments may be submitted by hand or by mail to the Docket Clerk, U.S. Department of Transportation, Docket Operations, M–30, West Building Ground Floor, Room W12–140, 1200 New Jersey Avenue SE., Washington, DC 20590. You may also send comments electronically via the Internet at *http://www.regulations.gov.* All comments will become part of this docket and will be available for inspection and copying at the above address between 10 a.m. and 5 p.m., E.T., Monday through Friday, except federal holidays. An electronic version of this document and all documents entered into this docket is available on the World Wide Web at *http://www.regulations.gov.*

FOR FURTHER INFORMATION CONTACT: Linda Williams, U.S. Department of Transportation, Maritime Administration, 1200 New Jersey Avenue SE., Room W23–453, Washington, DC 20590. Telephone 202–366–0903, Email *Linda.Williams@dot.gov.*

SUPPLEMENTARY INFORMATION: As described by the applicant the intended service of the vessel NAUTILE is:

Intended Commercial Use of Vessel: Charters.

Geographic Region: ''California, Florida.''

The complete application is given in DOT docket MARAD–2013–0034 at *http://www.regulations.gov.* Interested parties may comment on the effect this action may have on U.S. vessel builders or businesses in the U.S. that use U.S.-flag vessels. If MARAD determines, in accordance with 46 U.S.C. 12121 and MARAD's regulations at 46 CFR Part 388, that the issuance of the waiver will have an unduly adverse effect on a U.S.-vessel builder or a business that uses U.S.-flag vessels in that business, a waiver will not be granted. Comments should refer to the docket number of this notice and the vessel name in order for MARAD to properly consider the comments. Comments should also state the commenter's interest in the waiver application, and address the waiver criteria given in § 388.4 of MARAD's regulations at 46 CFR Part 388.

Privacy Act

Anyone is able to search the electronic form of all comments received into any of our dockets by the name of the individual submitting the comment (or signing the comment, if submitted on behalf of an association, business, labor union, etc.). You may review DOT's complete Privacy Act Statement in the **Federal Register** published on April 11, 2000 (Volume 65, Number 70; Pages 19477–78).

By Order of the Maritime Administrator.

Dated: March 18, 2013.

Julie P. Agarwal,

Secretary, Maritime Administration.

[FR Doc. 2013–07244 Filed 3–27–13; 8:45 am]

BILLING CODE 4910–81–P

DEPARTMENT OF TRANSPORTATION

Maritime Administration

[Docket No. MARAD–2013 0033]

Requested Administrative Waiver of the Coastwise Trade Laws: Vessel CHI; Invitation for Public Comments

AGENCY: Maritime Administration, Department of Transportation.

ACTION: Notice.

SUMMARY: As authorized by 46 U.S.C. 12121, the Secretary of Transportation, as represented by the Maritime Administration (MARAD), is authorized to grant waivers of the U.S.-build requirement of the coastwise laws under certain circumstances. A request for such a waiver has been received by MARAD. The vessel, and a brief description of the proposed service, is listed below.

DATES: Submit comments on or before April 29, 2013.

ADDRESSES: Comments should refer to docket number MARAD–2013–0033. Written comments may be submitted by hand or by mail to the Docket Clerk,

U.S. Department of Transportation, Docket Operations, M–30, West Building Ground Floor, Room W12–140, 1200 New Jersey Avenue SE., Washington, DC 20590. You may also send comments electronically via the Internet at *http://www.regulations.gov.* All comments will become part of this docket and will be available for inspection and copying at the above address between 10 a.m. and 5 p.m., E.T., Monday through Friday, except federal holidays. An electronic version of this document and all documents entered into this docket is available on the World Wide Web at *http://www.regulations.gov.*

FOR FURTHER INFORMATION CONTACT: Linda Williams, U.S. Department of Transportation, Maritime Administration, 1200 New Jersey Avenue SE., Room W23–453, Washington, DC 20590. Telephone 202–366–0903, Email *Linda.Williams@dot.gov.*

SUPPLEMENTARY INFORMATION: As described by the applicant the intended service of the vessel CHI is:

Intended Commercial Use Of Vessel: ''6 passenger charters in San Francisco Bay and tributary rivers.''

Geographic Region: ''California'' .

The complete application is given in DOT docket MARAD–2013–0033 at *http://www.regulations.gov.* Interested parties may comment on the effect this action may have on U.S. vessel builders or businesses in the U.S. that use U.S.-flag vessels. If MARAD determines, in accordance with 46 U.S.C. 12121 and MARAD's regulations at 46 CFR part 388, that the issuance of the waiver will have an unduly adverse effect on a U.S.-vessel builder or a business that uses U.S.-flag vessels in that business, a waiver will not be granted. Comments should refer to the docket number of this notice and the vessel name in order for MARAD to properly consider the comments. Comments should also state the commenter's interest in the waiver application, and address the waiver criteria given in § 388.4 of MARAD's regulations at 46 CFR part 388.

Privacy Act

Anyone is able to search the electronic form of all comments received into any of our dockets by the name of the individual submitting the comment (or signing the comment, if submitted on behalf of an association, business, labor union, etc.). You may review DOT's complete Privacy Act Statement in the **Federal Register** published on April 11, 2000 (Volume 65, Number 70; Pages 19477–78).

By Order of the Maritime Administrator.

Dated: March 18, 2013.

Julie P. Agarwal,

Secretary, Maritime Administration.

[FR Doc. 2013–07242 Filed 3–27–13; 8:45 am]

BILLING CODE 4910–81–P

DEPARTMENT OF TRANSPORTATION

Maritime Administration

[Docket No. MARAD–2013–0032]

Requested Administrative Waiver of the Coastwise Trade Laws: Vessel VANESSA; Invitation for Public Comments

AGENCY: Maritime Administration, Department of Transportation.

ACTION: Notice.

SUMMARY: As authorized by 46 U.S.C. 12121, the Secretary of Transportation, as represented by the Maritime Administration (MARAD), is authorized to grant waivers of the U.S.-build requirement of the coastwise laws under certain circumstances. A request for such a waiver has been received by MARAD. The vessel, and a brief description of the proposed service, is listed below.

DATES: Submit comments on or before April 29, 2013.

ADDRESSES: Comments should refer to docket number MARAD–2013–0032. Written comments may be submitted by hand or by mail to the Docket Clerk, U.S. Department of Transportation, Docket Operations, M–30, West Building Ground Floor, Room W12–140, 1200 New Jersey Avenue SE., Washington, DC 20590. You may also send comments electronically via the Internet at *http://www.regulations.gov.* All comments will become part of this docket and will be available for inspection and copying at the above address between 10 a.m. and 5 p.m., E.T., Monday through Friday, except federal holidays. An electronic version of this document and all documents entered into this docket is available on the World Wide Web at *http://www.regulations.gov.*

FOR FURTHER INFORMATION CONTACT: Linda Williams, U.S. Department of Transportation, Maritime Administration, 1200 New Jersey Avenue SE., Room W23–453, Washington, DC 20590. Telephone 202–366–0903, Email *Linda.Williams@dot.gov.*

SUPPLEMENTARY INFORMATION: As described by the applicant the intended service of the vessel VANESSA is:

Intended Commercial Use Of Vessel: 6 pack day charters around the island of Oahu in the Hawaiian Islands.

Geographic Region: Hawaii.

The complete application is given in DOT docket MARAD–2013–0032 at *http://www.regulations.gov.* Interested parties may comment on the effect this action may have on U.S. vessel builders or businesses in the U.S. that use U.S.-flag vessels. If MARAD determines, in accordance with 46 U.S.C. 12121 and MARAD's regulations at 46 CFR part 388, that the issuance of the waiver will have an unduly adverse effect on a U.S.-vessel builder or a business that uses U.S.-flag vessels in that business, a waiver will not be granted. Comments should refer to the docket number of this notice and the vessel name in order for MARAD to properly consider the comments. Comments should also state the commenter's interest in the waiver application, and address the waiver criteria given in § 388.4 of MARAD's regulations at 46 CFR part 388.

Privacy Act

Anyone is able to search the electronic form of all comments received into any of our dockets by the name of the individual submitting the comment (or signing the comment, if submitted on behalf of an association, business, labor union, etc.). You may review DOT's complete Privacy Act Statement in the **Federal Register** published on April 11, 2000 (Volume 65, Number 70; Pages 19477–78).

By Order of the Maritime Administrator.

Dated: March 18, 2013.

Julie P. Agarwal,

Secretary, Maritime Administration.

[FR Doc. 2013–07238 Filed 3–27–13; 8:45 am]

BILLING CODE 4910–81–P

DEPARTMENT OF TRANSPORTATION

Maritime Administration

[Docket No. MARAD–2013 0028]

Requested Administrative Waiver of the Coastwise Trade Laws: Vessel SCOUT; Invitation for Public Comments

AGENCY: Maritime Administration, Department of Transportation.

ACTION: Notice.

SUMMARY: As authorized by 46 U.S.C. 12121, the Secretary of Transportation, as represented by the Maritime Administration (MARAD), is authorized to grant waivers of the U.S.-build requirement of the coastwise laws under certain circumstances. A request for

such a waiver has been received by MARAD. The vessel, and a brief description of the proposed service, is listed below.

DATES: Submit comments on or before April 29, 2013.

ADDRESSES: Comments should refer to docket number MARAD–2013–0028. Written comments may be submitted by hand or by mail to the Docket Clerk, U.S. Department of Transportation, Docket Operations, M–30, West Building Ground Floor, Room W12–140, 1200 New Jersey Avenue SE., Washington, DC 20590. You may also send comments electronically via the Internet at *http://www.regulations.gov.* All comments will become part of this docket and will be available for inspection and copying at the above address between 10 a.m. and 5 p.m., E.T., Monday through Friday, except federal holidays. An electronic version of this document and all documents entered into this docket is available on the World Wide Web at *http://www.regulations.gov.*

FOR FURTHER INFORMATION CONTACT: Linda Williams, U.S. Department of Transportation, Maritime Administration, 1200 New Jersey Avenue SE., Room W23–453, Washington, DC 20590. Telephone 202–366–0903, Email *Linda.Williams@dot.gov.*

SUPPLEMENTARY INFORMATION: As described by the applicant the intended service of the vessel SCOUT is:

Intended Commercial Use of Vessel: ''Charter, up to 6 passengers''.

Geographic Region: ''California''.

The complete application is given in DOT docket MARAD–2013–0028 at *http://www.regulations.gov.* Interested parties may comment on the effect this action may have on U.S. vessel builders or businesses in the U.S. that use U.S.-flag vessels. If MARAD determines, in accordance with 46 U.S.C. 12121 and MARAD's regulations at 46 CFR Part 388, that the issuance of the waiver will have an unduly adverse effect on a U.S.-vessel builder or a business that uses U.S.-flag vessels in that business, a waiver will not be granted. Comments should refer to the docket number of this notice and the vessel name in order for MARAD to properly consider the comments. Comments should also state the commenter's interest in the waiver application, and address the waiver criteria given in § 388.4 of MARAD's regulations at 46 CFR Part 388.

Privacy Act

Anyone is able to search the electronic form of all comments received into any of our dockets by the name of the individual submitting the comment (or signing the comment, if submitted on behalf of an association, business, labor union, etc.). You may review DOT's complete Privacy Act Statement in the **Federal Register** published on April 11, 2000 (Volume 65, Number 70; Pages 19477–78).

Dated: March 18, 2013.

By Order of the Maritime Administrator.

Julie P. Agarwal,

Secretary, Maritime Administration.

[FR Doc. 2013–07229 Filed 3–27–13; 8:45 am]

BILLING CODE 4910–81–P

DEPARTMENT OF TRANSPORTATION

Maritime Administration

[Docket No. MARAD–2013 0035]

Requested Administrative Waiver of the Coastwise Trade Laws: Vessel MI CASA; Invitation for Public Comments

AGENCY: Maritime Administration, Department of Transportation.

ACTION: Notice.

SUMMARY: As authorized by 46 U.S.C. 12121, the Secretary of Transportation, as represented by the Maritime Administration (MARAD), is authorized to grant waivers of the U.S.-build requirement of the coastwise laws under certain circumstances. A request for such a waiver has been received by MARAD. The vessel, and a brief description of the proposed service, is listed below.

DATES: Submit comments on or before April 29, 2013.

ADDRESSES: Comments should refer to docket number MARAD–2013–0035. Written comments may be submitted by hand or by mail to the Docket Clerk, U.S. Department of Transportation, Docket Operations, M–30, West Building Ground Floor, Room W12–140, 1200 New Jersey Avenue SE., Washington, DC 20590. You may also send comments electronically via the Internet at *http://www.regulations.gov.* All comments will become part of this docket and will be available for inspection and copying at the above address between 10 a.m. and 5 p.m., E.T., Monday through Friday, except federal holidays. An electronic version of this document and all documents entered into this docket is available on the World Wide Web at *http://www.regulations.gov.*

FOR FURTHER INFORMATION CONTACT: Linda Williams, U.S. Department of Transportation, Maritime Administration, 1200 New Jersey Avenue SE., Room W23–453, Washington, DC 20590. Telephone 202–366–0903, Email *Linda.Williams@dot.gov.*

SUPPLEMENTARY INFORMATION: As described by the applicant the intended service of the vessel MI CASA is:

Intended Commercial Use of Vessel: Passenger charters.

Geographic Region: Massachusetts, New Hampshire, Maine.

The complete application is given in DOT docket MARAD–2013–0035 at *http://www.regulations.gov.* Interested parties may comment on the effect this action may have on U.S. vessel builders or businesses in the U.S. that use U.S.-flag vessels. If MARAD determines, in accordance with 46 U.S.C. 12121 and MARAD's regulations at 46 CFR Part 388, that the issuance of the waiver will have an unduly adverse effect on a U.S.-vessel builder or a business that uses U.S.-flag vessels in that business, a waiver will not be granted. Comments should refer to the docket number of this notice and the vessel name in order for MARAD to properly consider the comments. Comments should also state the commenter's interest in the waiver application, and address the waiver criteria given in § 388.4 of MARAD's regulations at 46 CFR Part 388.

Privacy Act

Anyone is able to search the electronic form of all comments received into any of our dockets by the name of the individual submitting the comment (or signing the comment, if submitted on behalf of an association, business, labor union, etc.). You may review DOT's complete Privacy Act Statement in the **Federal Register** published on April 11, 2000 (Volume 65, Number 70; Pages 19477–78).

By Order of the Maritime Administrator.

Dated: March 18, 2013.

Julie P. Agarwal,

Secretary, Maritime Administration.

[FR Doc. 2013–07245 Filed 3–27–13; 8:45 am]

BILLING CODE 4910–81–P

DEPARTMENT OF TRANSPORTATION

Maritime Administration

[Docket No. MARAD–2013 0027]

Requested Administrative Waiver of the Coastwise Trade Laws: Vessel FRANK S. CRESSEY; Invitation for Public Comments

AGENCY: Maritime Administration, Department of Transportation.

ACTION: Notice.

SUMMARY: As authorized by 46 U.S.C. 12121, the Secretary of Transportation, as represented by the Maritime Administration (MARAD), is authorized to grant waivers of the U.S.-build requirement of the coastwise laws under certain circumstances. A request for such a waiver has been received by MARAD. The vessel, and a brief description of the proposed service, is listed below.

DATES: Submit comments on or before April 29, 2013.

ADDRESSES: Comments should refer to docket number MARAD–2013–0027. Written comments may be submitted by hand or by mail to the Docket Clerk, U.S. Department of Transportation, Docket Operations, M–30, West Building Ground Floor, Room W12–140, 1200 New Jersey Avenue SE., Washington, DC 20590. You may also send comments electronically via the Internet at *http://www.regulations.gov.* All comments will become part of this docket and will be available for inspection and copying at the above address between 10 a.m. and 5 p.m., E.T., Monday through Friday, except federal holidays. An electronic version of this document and all documents entered into this docket is available on the World Wide Web at *http://www.regulations.gov.*

FOR FURTHER INFORMATION CONTACT: Linda Williams, U.S. Department of Transportation, Maritime Administration, 1200 New Jersey Avenue SE., Room W23–453, Washington, DC 20590. Telephone 202–366–0903, Email *Linda.Williams@dot.gov.*

SUPPLEMENTARY INFORMATION: As described by the applicant the intended service of the vessel FRANK S. CRESSEY is:

Intended Commercial Use of Vessel: ''Yacht Club Sailboat Race and Instruction Support''.

Geographic Region: ''California''.

The complete application is given in DOT docket MARAD–2013–0027 at *http://www.regulations.gov.* Interested parties may comment on the effect this action may have on U.S. vessel builders or businesses in the U.S. that use U.S.-flag vessels. If MARAD determines, in accordance with 46 U.S.C. 12121 and MARAD's regulations at 46 CFR part 388, that the issuance of the waiver will have an unduly adverse effect on a U.S.-vessel builder or a business that uses U.S.-flag vessels in that business, a waiver will not be granted. Comments should refer to the docket number of this notice and the vessel name in order for MARAD to properly consider the comments. Comments should also state the commenter's interest in the waiver application, and address the waiver criteria given in § 388.4 of MARAD's regulations at 46 CFR part 388.

Privacy Act

Anyone is able to search the electronic form of all comments received into any of our dockets by the name of the individual submitting the comment (or signing the comment, if submitted on behalf of an association, business, labor union, etc.). You may review DOT's complete Privacy Act Statement in the **Federal Register** published on April 11, 2000 (Volume 65, Number 70; Pages 19477–78).

By Order of the Maritime Administrator.

Julie P. Agarwal,

Secretary, Maritime Administration.

[FR Doc. 2013–07240 Filed 3–27–13; 8:45 am]

BILLING CODE 4910–81–P

DEPARTMENT OF TRANSPORTATION

Maritime Administration

[Docket No. MARAD–2013 0031]

Requested Administrative Waiver of the Coastwise Trade Laws: Vessel MARAE; Invitation for Public Comments

AGENCY: Maritime Administration, Department of Transportation.

ACTION: Notice.

SUMMARY: As authorized by 46 U.S.C. 12121, the Secretary of Transportation, as represented by the Maritime Administration (MARAD), is authorized to grant waivers of the U.S.-build requirement of the coastwise laws under certain circumstances. A request for such a waiver has been received by MARAD. The vessel, and a brief description of the proposed service, is listed below.

DATES: Submit comments on or before April 29, 2013.

ADDRESSES: Comments should refer to docket number MARAD–2013–0031. Written comments may be submitted by hand or by mail to the Docket Clerk, U.S. Department of Transportation, Docket Operations, M–30, West Building Ground Floor, Room W12–140, 1200 New Jersey Avenue SE., Washington, DC 20590. You may also send comments electronically via the Internet at *http://www.regulations.gov.* All comments will become part of this docket and will be available for inspection and copying at the above address between 10 a.m. and 5 p.m., E.T., Monday through Friday, except federal holidays. An electronic version of this document and all documents entered into this docket is available on the World Wide Web at *http://www.regulations.gov.*

FOR FURTHER INFORMATION CONTACT: Linda Williams, U.S. Department of Transportation, Maritime Administration, 1200 New Jersey Avenue SE., Room W23–453, Washington, DC 20590. Telephone 202–366–0903, Email *Linda.Williams@dot.gov.*

SUPPLEMENTARY INFORMATION: As described by the applicant the intended service of the vessel MARAE is:

Intended Commercial Use of Vessel: Vessel charters.

Geographic Region: Florida, Georgia, South Carolina, North Carolina, Virginia, Maryland, Washington DC, Delaware, New Jersey, New York, Connecticut, Rhode Island, Massachusetts, New Hampshire, Maine.

The complete application is given in DOT docket MARAD–2013–0031 at *http://www.regulations.gov.* Interested parties may comment on the effect this action may have on U.S. vessel builders or businesses in the U.S. that use U.S.-flag vessels. If MARAD determines, in accordance with 46 U.S.C. 12121 and MARAD's regulations at 46 CFR part 388, that the issuance of the waiver will have an unduly adverse effect on a U.S.-vessel builder or a business that uses U.S.-flag vessels in that business, a waiver will not be granted. Comments should refer to the docket number of this notice and the vessel name in order for MARAD to properly consider the comments. Comments should also state the commenter's interest in the waiver application, and address the waiver criteria given in § 388.4 of MARAD's regulations at 46 CFR part 388.

Privacy Act

Anyone is able to search the electronic form of all comments received into any of our dockets by the name of the individual submitting the comment (or signing the comment, if submitted on behalf of an association, business, labor union, etc.). You may review DOT's complete Privacy Act Statement in the **Federal Register** published on April 11, 2000 (Volume 65, Number 70; Pages 19477–78).

By Order of the Maritime Administrator.

March 18, 2013.

Julie P. Agarwal,

Secretary, Maritime Administration.

[FR Doc. 2013–07239 Filed 3–27–13; 8:45 am]

BILLING CODE 4910–81–P

DEPARTMENT OF TRANSPORTATION

Maritime Administration

[Docket No. MARAD–2013 0036]

Requested Administrative Waiver of the Coastwise Trade Laws: Vessel GOLDEN BOY II; Invitation for Public Comments

AGENCY: Maritime Administration, Department of Transportation.

ACTION: Notice.

SUMMARY: As authorized by 46 U.S.C. 12121, the Secretary of Transportation, as represented by the Maritime Administration (MARAD), is authorized to grant waivers of the U.S.-build requirement of the coastwise laws under certain circumstances. A request for such a waiver has been received by MARAD. The vessel, and a brief description of the proposed service, is listed below.

DATES: Submit comments on or before April 29, 2013.

ADDRESSES: Comments should refer to docket number MARAD–2013–0036. Written comments may be submitted by hand or by mail to the Docket Clerk, U.S. Department of Transportation, Docket Operations, M–30, West Building Ground Floor, Room W12–140, 1200 New Jersey Avenue SE., Washington, DC 20590. You may also send comments electronically via the Internet at *http://www.regulations.gov.* All comments will become part of this docket and will be available for inspection and copying at the above address between 10 a.m. and 5 p.m., E.T., Monday through Friday, except federal holidays. An electronic version of this document and all documents entered into this docket is available on the World Wide Web at http://www.regulations.gov.

FOR FURTHER INFORMATION CONTACT: Linda Williams, U.S. Department of Transportation, Maritime Administration, 1200 New Jersey Avenue SE., Room W23–453, Washington, DC 20590. Telephone 202–366–0903, Email *Linda.Williams@dot.gov.*

SUPPLEMENTARY INFORMATION: As described by the applicant the intended service of the vessel GOLDEN BOY II is:

Intended Commercial Use Of Vessel: Limited charter of passengers for luxury day, overnight, and extended cruises.

Geographic Region: Washington, Oregon, California, and Alaska (excluding waters in Southeastern Alaska and waters north of a line between Gore Point to Cape Suckling [including the North Gulf Coast and Prince William Sound]).

The complete application is given in DOT docket MARAD–2013–0036 at *http://www.regulations.gov.* Interested parties may comment on the effect this action may have on U.S. vessel builders or businesses in the U.S. that use U.S.-flag vessels. If MARAD determines, in accordance with 46 U.S.C. 12121 and MARAD's regulations at 46 CFR part 388, that the issuance of the waiver will have an unduly adverse effect on a U.S.-vessel builder or a business that uses U.S.-flag vessels in that business, a waiver will not be granted. Comments should refer to the docket number of this notice and the vessel name in order for MARAD to properly consider the comments. Comments should also state the commenter's interest in the waiver application, and address the waiver criteria given in § 388.4 of MARAD's regulations at 46 CFR part 388.

Privacy Act

Anyone is able to search the electronic form of all comments received into any of our dockets by the name of the individual submitting the comment (or signing the comment, if submitted on behalf of an association, business, labor union, etc.). You may review DOT's complete Privacy Act Statement in the **Federal Register** published on April 11, 2000 (Volume 65, Number 70; Pages 19477–78).

By Order of the Maritime Administrator.

Dated: March 18, 2013.

Julie P. Agarwal,

Secretary, Maritime Administration.

[FR Doc. 2013–07247 Filed 3–27–13; 8:45 am]

BILLING CODE 4910–81–P

DEPARTMENT OF TRANSPORTATION

Maritime Administration

[Docket No. MARAD–2013 0030]

Requested Administrative Waiver of the Coastwise Trade Laws: Vessel WILDCAT; Invitation for Public Comments

AGENCY: Maritime Administration, Department of Transportation.

ACTION: Notice.

SUMMARY: As authorized by 46 U.S.C. 12121, the Secretary of Transportation, as represented by the Maritime Administration (MARAD), is authorized to grant waivers of the U.S.-build requirement of the coastwise laws under certain circumstances. A request for such a waiver has been received by MARAD. The vessel, and a brief description of the proposed service, is listed below.

DATES: Submit comments on or before April 29, 2013.

ADDRESSES: Comments should refer to docket number MARAD–2013–0030. Written comments may be submitted by hand or by mail to the Docket Clerk, U.S. Department of Transportation, Docket Operations, M–30, West Building Ground Floor, Room W12–140, 1200 New Jersey Avenue SE., Washington, DC 20590. You may also send comments electronically via the Internet at *http://www.regulations.gov.* All comments will become part of this docket and will be available for inspection and copying at the above address between 10 a.m. and 5 p.m., E.T., Monday through Friday, except federal holidays. An electronic version of this document and all documents entered into this docket is available on the World Wide Web at *http://www.regulations.gov.*

FOR FURTHER INFORMATION CONTACT: Linda Williams, U.S. Department of Transportation, Maritime Administration, 1200 New Jersey Avenue SE., Room W23–453, Washington, DC 20590. Telephone 202–366–0903, Email *Linda.Williams@dot.gov.*

SUPPLEMENTARY INFORMATION: As described by the applicant the intended service of the vessel WILDCAT is:

Intended Commercial Use of Vessel: ''Vieques Charter Boat—Half day, full day, short overnight charter trips around Vieques''.

Geographic Region: ''Puerto Rico, Vieques and Culebra Only''.

The complete application is given in DOT docket MARAD–2013–0030 at *http://www.regulations.gov.* Interested parties may comment on the effect this action may have on U.S. vessel builders or businesses in the U.S. that use U.S.-flag vessels. If MARAD determines, in accordance with 46 U.S.C. 12121 and MARAD's regulations at 46 CFR Part 388, that the issuance of the waiver will have an unduly adverse effect on a U.S.-vessel builder or a business that uses U.S.-flag vessels in that business, a waiver will not be granted. Comments should refer to the docket number of this notice and the vessel name in order for MARAD to properly consider the comments. Comments should also state the commenter's interest in the waiver application, and address the waiver criteria given in § 388.4 of MARAD's regulations at 46 CFR Part 388.

Privacy Act

Anyone is able to search the electronic form of all comments

received into any of our dockets by the name of the individual submitting the comment (or signing the comment, if submitted on behalf of an association, business, labor union, etc.). You may review DOT's complete Privacy Act Statement in the **Federal Register** published on April 11, 2000 (Volume 65, Number 70; Pages 19477–78).

By Order of the Maritime Administrator.

Dated: March 18, 2013.

Julie P. Agarwal,

Secretary, Maritime Administration.

[FR Doc. 2013–07231 Filed 3–27–13; 8:45 am]

BILLING CODE 4910–81–P

DEPARTMENT OF TRANSPORTATION

Surface Transportation Board

[Docket No. MCF 21052]

Southfield Coinvest Holdings, LLC; Southfield Hallcon Investment Corp. and Hallcon Crew Transport Inc., et al.—Acquisition of Control—Renzenberger, Inc.

AGENCY: Surface Transportation Board, DOT.

ACTION: Notice Tentatively Approving and Authorizing Transaction.

SUMMARY: Southfield Coinvest Holdings, LLC (Southfield), Southfield Hallcon Investment Corp. (SHIC), Hallcon Holding Corp. (HHC), Hallcon Corp. (HC), Hallcon Crew Transport Inc. (Hallcon Canada), and Hallcon Crew Transport Inc. (Hallcon U.S.) (collectively, Applicants) have filed an application under 49 U.S.C. 14303 for their acquisition of control of Renzenberger, Inc. (Renzenberger). The Board is tentatively approving and authorizing the transaction, and, if no opposing comments are timely filed, this notice will be the final Board action. Persons wishing to oppose the application must follow the rules under 49 CFR 1182.5 and 1182.8.

DATES: Comments must be filed by May 13, 2013. Applicants may file a reply by May 28, 2013. If no comments are filed by May 13, 2013, this notice shall be effective on May 14, 2013.

ADDRESSES: Send an original and 10 copies of any comments referring to Docket No. MCF 21052 to: Surface Transportation Board, 395 E Street SW., Washington, DC 20423–0001. In addition, send one copy of comments to Applicants' representative: David H. Coburn, Steptoe & Johnson LLP, 1330 Connecticut Ave. NW., Washington, DC 20036.

FOR FURTHER INFORMATION CONTACT: Amy C. Ziehm, (202) 245–0391. Federal Information Relay Service (FIRS) for the hearing impaired: 1–800–877–8339.

SUPPLEMENTARY INFORMATION: Southfield is a noncarrier private investment firm incorporated under Delaware law and headquartered in Greenwich, Conn. Southfield owns several entities that are not carriers in the United States, as well as Hallcon U.S., a federally authorized motor carrier that it owns indirectly. Southfield is the majority shareholder of SHIC, which is incorporated under Canadian law and headquartered at the same location as Southfield. SHIC is the majority shareholder of HHC stock, which is a noncarrier holding company incorporated under Canadian law. HHC directly owns 100% of HC. HC is incorporated under Canadian law and headquartered in Toronto, Ont., Can. HC is a noncarrier that provides facility and transit cleaning services to the Canadian railway and transit industries. HC directly owns 100% of Hallcon Canada, which is incorporated under Canadian law and headquartered in Toronto, Ont., Can. Hallcon Canada is a motor carrier of passengers providing crew transport services to the Canadian railway and transit industries. Hallcon Canada operates only in Canada.

Hallcon U.S. is wholly and directly owned by Hallcon Canada. Hallcon U.S. is incorporated under the laws of Delaware and headquartered in Toronto, Ont., Can. Hallcon U.S. is a federally registered motor carrier of passengers in the United States, providing crew transport services to freight railroads across the United States pursuant to contracts with the railroads. Hallcon U.S. provides this transportation on both an interstate and intrastate basis, operating over 50 vehicles and employing over 150 drivers in the United States.[1] Hallcon U.S. holds interstate authority issued by the Federal Motor Carrier Safety Administration (FMCSA) in Docket No. MC–474586, and operates under U.S. Department of Transportation (USDOT) Number 1188236.

Renzenberger is a Kansas corporation and is a subsidiary of Peterson Manufacturing Company (Peterson), which is headquartered in Missouri. Peterson is a noncarrier corporation engaged in the manufacture of vehicle safety lighting, mirrors, reflectors, antennas, and related products. Renzenberger is a federally authorized motor carrier of passengers that provides rail crew transportation services in over 20 states within the United States.[2] These transportation services are provided primarily under contracts with railroads. Renzenberger operates over 1,200 vehicles and employs over 2,500 drivers. Renzenberger holds interstate operating authority issued by the FMCSA in Docket No. MC–170517, and operates under USDOT Number 210768.

Under the proposed transaction, Hallcon U.S. would create a subsidiary corporation, Hallcon Acquisition Subsidiary, for purposes of purchasing the stock of Renzenberger. After Hallcon Acquisition Subsidiary purchases the stock of Renzenberger, it would be merged into Renzenberger. Renzenberger would be the surviving corporation and it would be directly and wholly owned by Hallcon U.S. and indirectly controlled by Hallcon U.S.'s ultimate controlling shareholder, Southfield. Following the transaction, Renzenberger would continue to operate as an independent company, conducting the same operations it currently conducts pursuant to the operating authority it currently possesses. The proposed transaction would result in a change of Renzenberger's ownership, but would not change the nature or scope of Renzenberger's operations or transfer any of its operating authorities.

Under 49 U.S.C. 14303(b), the Board must approve and authorize a motor carrier of passengers transaction it finds consistent with the public interest, taking into consideration at least: (1) The effect of the transaction on the adequacy of transportation to the public; (2) the total fixed charges that result; and (3) the interest of affected carrier employees. Applicants have submitted information, as required by 49 CFR 1182.2, including the information to demonstrate that the proposed transaction is consistent with the public interest under 49 U.S.C. 14303(b), and a statement that the 12-month aggregate gross operating revenues of the carriers involved in the transaction have exceeded $2 million.

Applicants state that the proposed transaction will have no significant impact on the adequacy of transportation services available to the public, because Applicants do not intend to change substantially the physical operations historically conducted by Renzenberger or Hallcon U.S. Rather, Applicants maintain that the transaction would improve efficiency and lower the costs of

[1] Hallcon U.S. holds intrastate authority issued by the following states: Pennsylvania, Iowa, Missouri, Indiana, Arkansas, Louisiana, Alabama, and Kentucky.

[2] Renzenberger holds intrastate authority issued by the following states: Arkansas, California, Colorado, Delaware, Indiana, Iowa, Kansas, Louisiana, Maryland, Michigan, Missouri, Nebraska, Nevada, New Mexico, Oklahoma, Texas, and Wyoming.

Renzenberger's operations. Specifically, to accommodate expected growth in customer demand, Applicants state that they anticipate leveraging each company's senior and field level managers, thereby reducing the need to invest more in personnel in the near term. Applicants state that Hallcon U.S. would enter into vehicle sharing arrangements with Renzenberger to ensure maximum utilization and operational efficiency of equipment. According to the Applicants, the reduced costs associated with these efficiencies would put Renzenberger in a better position to invest in the equipment necessary to maintain the services it provides.

Applicants further note that the acquisition would have no adverse impact on competition, because Hallcon U.S. and Renzenberger have historically focused their services on different customers. Applicants state that both entities will continue to face competition or potential competition from other rail crew and passenger carriers such as Professional Transportation, Inc. and Railcrew Xpress. With respect to fixed charges, Applicants state that while Hallcon U.S.'s overall debt and interest payments may increase as a result of its acquisition of Renzenberger's stock, the transaction would not have an adverse impact on the ability of Renzenberger and Hallcon U.S. to meet their debt and interest obligations, while continuing to offer service to the public. Applicants also state that the proposed transaction would not have a significant adverse impact on carrier employees, as Hallcon U.S. and Renzenberger plan to continue to employ nearly all of their current employees after the proposed transaction is completed.

On the basis of the application, the Board finds that the proposed acquisition of control is consistent with the public interest and should be tentatively approved and authorized. The Board notes that the motor carrier passenger sector is competitive and has low barriers to entry. If any opposing comments are timely filed, this finding will be vacated automatically, and, unless a final decision can be made on the record as developed, a procedural schedule will be adopted to reconsider the application. *See* 49 CFR 1182.6(c). If no opposing comments are filed by the expiration of the comment period, this notice will take effect automatically and will be the final Board action.

The application and Board decisions and notices are available on our Web site at ''*WWW.STB.DOT.GOV.*''

This decision will not significantly affect either the quality of the human environment or the conservation of energy resources.

It is ordered:

1. The proposed transaction is approved and authorized, subject to the filing of opposing comments.

2. If opposing comments are timely filed, the findings made in this notice will be deemed vacated.

3. This notice will be effective May 14, 2013, unless opposing comments are timely filed by May 13, 2013.

4. A copy of this decision will be served on: (1) U.S. Department of Transportation, Federal Motor Carrier Safety Administration, 1200 New Jersey Avenue, SE., Washington, DC 20590; (2) the U.S. Department of Justice, Antitrust Division, 10th Street & Pennsylvania Avenue NW., Washington, DC 20530; and (3) the U.S. Department of Transportation, Office of the General Counsel, 1200 New Jersey Avenue SE., Washington, DC 20590.

By the Board, Chairman Elliott, Vice Chairman Begeman, and Commissioner Mulvey.

Decided: March 22, 2013.

Jeffrey Herzig,

Clearance Clerk.

[FR Doc. 2013–07309 Filed 03–28–13; 8:45 am]

BILLING CODE 4915–01–P

DEPARTMENT OF THE TREASURY

Submission for OMB Review; Comment Request

March 25, 2013.

The Department of the Treasury will submit the following information collection request to the Office of Management and Budget (OMB) for review and clearance in accordance with the Paperwork Reduction Act of 1995, Public Law 104–13, on or after the date of publication of this notice.

DATES: Comments should be received on or before April 29, 2013 to be assured of consideration.

ADDRESSES: Send comments regarding the burden estimate, or any other aspect of the information collection, including suggestion for reducing the burden, to (1) Office of Information and Regulatory Affairs, Office of Management and Budget, Attention: Desk Officer for Treasury, New Executive Office Building, Room 10235, Washington, DC 20503, or email at *OIRA_Submission@OMB.EOP.GOV* and (2) Treasury PRA Clearance Officer, 1750 Pennsylvania Ave. NW., Suite 8140, Washington, DC 20220, or email at *PRA@treasury.gov.*

FOR FURTHER INFORMATION CONTACT: Copies of the submission(s) may be obtained by calling (202) 927–5331, email at *PRA@treasury.gov,* or the entire information collection request may be found at *www.reginfo.gov.*

Alcohol and Tobacco Tax and Trade Bureau (TTB)

OMB Number: 1513–0016.

Type of Review: Extension without change of a currently approved collection.

Title: Drawback on Wines Exported.

Form: TTB F 5120.24.

Abstract: Exporters of wines that were produced, packaged, manufactured, or bottled in the U.S. may file a claim for drawback of the taxes that have been paid or determined on the wine. This form enables TTB to protect the revenue and prevent fraudulent claims.

Affected Public: Private Sector: Businesses or other for-profits.

Estimated Total Burden Hours: 94.

OMB Number: 1513–0031.

Type of Review: Extension without change of a currently approved collection.

Title: Specific and Continuing Transportation Bond—Distilled Spirits or Wines Withdrawn for Transportation to Manufacturing Bonded Warehouse—Class Six.

Form: TTB F 5100.12, TTB F 5110.67.

Abstract: TTB F 5100.12 and TTB F 5110.67 are specific bonds that protect the tax revenue on distilled spirits and wine while in transit from one type of bonded facility to another. They identify the shipment, the parties, the date, and the amount of bond coverage.

Affected Public: Private Sector: Businesses or other for-profits.

Estimated Total Burden Hours: 10.

OMB Number: 1513–0123.

Type of Review: Extension without change of a currently approved collection.

Title: Application, Permit, and Report—Wine and Beer (Puerto Rico) and Application, Permit and Report—Distilled Spirits Products (Puerto Rico).

Form: TTB F 5110.51, TTB F 5100.21.

Abstract: TTB Form 5100.21 is a permit to compute the tax on, tax pay, and withdraw shipments of wine or beer from Puerto Rico to the United States, as substantively required by 27 CFR 26.93. TTB Form 5110.51 is a permit to compute the tax on, tax pay, and withdraw shipments of distilled spirits products from Puerto Rico to the United States, as substantively required by 27 CFR 26.78.

Affected Public: Private Sector: Businesses or other for-profits.

Estimated Total Burden Hours: 6.

Dawn D. Wolfgang,

Treasury PRA Clearance Officer.

[FR Doc. 2013–07165 Filed 3–27–13; 8:45 am]

BILLING CODE 4810–31–P

DEPARTMENT OF THE TREASURY

Submission for OMB Review; Comment Request

March 25, 2013.

The Department of the Treasury will submit the following information collection request to the Office of Management and Budget (OMB) for review and clearance in accordance with the Paperwork Reduction Act of 1995, Public Law 104–13, on or after the date of publication of this notice.

DATES: Comments should be received on or before April 29, 2013 to be assured of consideration.

ADDRESSES: Send comments regarding the burden estimate, or any other aspect of the information collection, including suggestion for reducing the burden, to (1) Office of Information and Regulatory Affairs, Office of Management and Budget, Attention: Desk Officer for Treasury, New Executive Office Building, Room 10235, Washington, DC 20503, or email at *OIRA_Submission@OMB.EOP.GOV* and (2) Treasury PRA Clearance Officer, 1750 Pennsylvania Ave. NW., Suite 8140, Washington, DC 20220, or email at *PRA@treasury.gov.*

FOR FURTHER INFORMATION CONTACT: Copies of the submission(s) may be obtained by calling (202) 927–5331, email at *PRA@treasury.gov,* or the entire information collection request maybe found at *www.reginfo.gov.*

Office of Fiscal Assistant Secretary

OMB Number: 1505–0221.

Type of Review: Revision of a currently approved collection.

Title: Annual Performance Report and Certification for Section 1603: Payments for Specified Renewable Energy Property in Lieu of Tax Credits.

Abstract: Authorized under the American Recovery and Reinvestment Act (ARRA), of 2009 (Pub. L. 111–5), the Department of the Treasury is implementing several provisions of the Act, more specifically Division B—Tax, Unemployment, Health, State Fiscal Relief, and Other Provisions. Among these components is a program which requires Treasury, in lieu of a tax credit, to reimburse persons who place in service certain specified energy properties. The collection of information is necessary to properly monitor compliance with program requirements. Applicants for Section 1603 payments commit in the Terms and Conditions that are part of the application to submitting an annual report for five years from the date the energy property is placed in service. The information will be used to (1) Determine whether payment recipients remain eligible, (2) determine that the amount of the 1603 payment remains allowable under applicable laws, (3) assess compliance with applicable laws, and (4) report on the effectiveness of the program.

Affected Public: State, Local, and Tribal Governments.

Estimated Total Burden Hours: 37,500.

Dawn D. Wolfgang,

Treasury PRA Clearance Officer.

[FR Doc. 2013–07164 Filed 3–27–13; 8:45 am]

BILLING CODE 4810–25–P

DEPARTMENT OF THE TREASURY

Submission for OMB Review; Comment Request

March 25, 2013.

The Department of the Treasury will submit the following information collection requests to the Office of Management and Budget (OMB) for review and clearance in accordance with the Paperwork Reduction Act of 1995, Public Law 104–13, on or after the date of publication of this notice.

DATES: Comments should be received on or before April 29, 2013 to be assured of consideration.

ADDRESSES: Send comments regarding the burden estimate, or any other aspect of the information collection, including suggestion for reducing the burden, to (1) Office of Information and Regulatory Affairs, Office of Management and Budget, Attention: Desk Officer for Treasury, New Executive Office Building, Room 10235, Washington, DC 20503, or email at *OIRA_Submission@OMB.EOP.GOV* and (2) Treasury PRA Clearance Officer, 1750 Pennsylvania Ave. NW., Suite 8140, Washington, DC 20220, or email at *PRA@treasury.gov.*

FOR FURTHER INFORMATION CONTACT: Copies of the submission(s) may be obtained by calling (202) 927–5331, email at *PRA@treasury.gov,* or the entire information collection request maybe found at *www.reginfo.gov.*

Internal Revenue Service (IRS)

OMB Number: 1545–0028.

Type of Review: Extension without change of a currently approved collection.

Title: Employer's Annual Federal Unemployment (FUTA) Tax Return (Form 940); Planilla Para La Declaracion Anual Del Patrono-La Contribucion Federal Para El Desempleo (FUTA) (Form 940–PR).

Form: 940; Schedule A (Form 940); Schedule R (Form 940); 940–PR; Schedule (Form 940–PR).

Abstract: IRC section 3301 imposes a tax on employees based on the first $7,000 of taxable annual wages paid to each employee. IRS uses the information reported on Forms 940 and 940–PR (Puerto Rico) to ensure that employers have reported and figured the correct FUTA Wages and tax.

Affected Public: Private Sector: Businesses or other for-profits.

Estimated Total Burden Hours: 105,295,370.

OMB Number: 1545–0130.

Type of Review: Extension without change of a currently approved collection.

Title: U.S. Income Tax Return for an S Corporation.

Form: 1120–S; Schedules M–3, D, K–1, L, M–1, K–1 (Form 1120–S).

Abstract: Form 1120S, Schedule D (Form 1120S), Schedule K–1 (Form 1120S), and Schedule M–3 (Form 1120S) are used by an S corporation to figure its tax liability, and income and other tax-related information to pass through to its shareholders. Schedule K–1 is used to report to shareholders their share of the corporation's income, deductions, credits, etc. IRS uses the information to determine the correct tax for the S corporation and its shareholders.

Affected Public: Private Sector: Businesses or other for-profits.

Estimated Total Burden Hours: 420,945,980.

OMB Number: 1545–0135.

Type of Review: Extension without change of a currently approved collection.

Title: Extension of Time for Payment of Taxes by a Corporation Expecting a Net Operating Loss Carryback.

Form: 1138.

Abstract: Form 1138 is filed by corporations to request an extension of time to pay their income taxes, including estimated taxes. Corporations may only file for an extension when they expect a net operating loss carryback in the tax year and want to delay the payment of taxes from a prior tax year.

Affected Public: Private Sector: Businesses or other for-profits.

Estimated Total Burden Hours: 9,800.

OMB Number: 1545–0212.

Type of Review: Revision of a currently approved collection.

Title: Application for Extension of Time to File Certain Employee Plan Returns.

Form: 5558.

Abstract: This form is used by employers to request an extension of time to file the employee plan annual information return/report (Form 5500 series) or employee plan excise tax return (Form 5330). The data supplied on Form 5558 is used to determine if such extension of time is warranted.

Affected Public: Private Sector: Businesses or other for-profits.

Estimated Total Burden Hours: 231,693.

OMB Number: 1545–0231.

Type of Review: Revision of a currently approved collection.

Title: Credit for Alcohol Used as Fuel.

Form: 6478.

Abstract: IRC section 38(b)(3) allows a nonrefundable income tax credit for businesses that sell or use alcohol. Small ethanol producers also receive a nonrefundable credit for production of qualified ethanol. Form 6478 is used to figure the credits.

Affected Public: Private Sector: Businesses or other for-profits.

Estimated Total Burden Hours: 231,693.

OMB Number: 1545–1696.

Type of Review: Extension without change of a currently approved collection.

Title: Political Organization Report of Contributions and Expenditures.

Form: 8872.

Abstract: Internal Revenue Code section 527(j) requires certain political organizations to report certain contributions received and expenditures made after July 1, 2000. Every section 527 political organization that accepts a contribution or makes an expenditure for an exempt function during the calendar year must file Form 8872, except for: A political organization that is not required to file Form 8871, or a state or local committee of a political party or political committee of a state or local candidate.

Affected Public: Private Sector: Not for-profits institutions.

Estimated Total Burden Hours: 431,200.

OMB Number: 1545–1707.

Type of Review: Extension without change of a currently approved collection.

Title: TD 8957 Final—Estate Tax Return; Form 706, Extension to File.

Abstract: This collection involves regulations relating to the filing of an application for an automatic 6-month extension of time to file an estate tax return (Form 706). The regulations provide guidance to executors of decedents' estates on how to properly file the application for the automatic extension.

Affected Public: Individuals or Households.

Estimated Total Burden Hours: 1.

OMB Number: 1545–1711.

Type of Review: Extension without change of a currently approved collection.

Title: REG–116050–99 (final) Stock Transfer Rules: Carryover of Earnings and Taxes.

Abstract: This document contains final regulations addressing the carry over of certain attributes, such as earnings and profits and foreign income tax accounts, when two corporations combine in a corporate reorganization or liquidation that is described in both section 367(b) and section 381 of the Internal Revenue Code.

Affected Public: Private Sector: Businesses or other for-profits.

Estimated Total Burden Hours: 1,800.

OMB Number: 1545–2020.

Type of Review: Extension without change of a currently approved collection.

Title: TD 9338—Information Returns Required with Respect to Certain Foreign Corporations and Certain Foreign-Owned Domestic Corporations.

Abstract: This document contains final and temporary regulations that provide guidance under section 6038 and 6038A of the Internal Revenue Code. These regulations clarify the information required to be furnished regarding certain related party transactions of certain foreign corporations and certain foreign-owned domestic corporations. Specifically, in addition to the types of transactions listed in Sec. 1.6038–2(f)(11) taxpayers are required to report the sales of tangible property other than stock in trade on Form 5471.

Affected Public: Private Sector: Businesses or other for-profits.

Estimated Total Burden Hours: 1,250.

OMB Number: 1545–2025.

Type of Review: Extension without change of a currently approved collection.

Title: Clean Renewable Energy Bond Credit and Gulf Bond Credit.

Form: 8912.

Abstract: Form 8912, Clean Renewable Energy Bond Credit and Gulf Bond Credit, was developed to carry out the provisions of new Internal Revenue Code sections 54 and 1400N(l). The form provides a means for the taxpayer to compute the clean renewable energy bond credit and the Gulf bond credit.

Affected Public: Private Sector: Businesses or other for-profits.

Estimated Total Burden Hours: 5,555.

OMB Number: 1545–2151.

Type of Review: Extension without change of a currently approved collection.

Title: Notice 2009–72—Qualifying Advanced Energy Project Credit.

Abstract: This notice establishes the qualifying advanced energy project program (''advanced energy program'') under § 48C(d) of the Internal Revenue Code and announces an initial allocation round of the qualifying advanced energy project credit (''advanced energy credit'') to qualifying advanced energy projects under the advanced energy program. A qualifying advanced energy project re-equips, expands, or establishes a manufacturing facility for the production of certain energy related property. A taxpayer must submit, for each qualifying advanced energy project: (1) An application for certification by the DOE (''application for DOE certification''), and (2) an application for certification under § 48C(d)(2) by the Service (''application for § 48C certification''). Both applications may be submitted only during the 2-year period beginning on August 14, 2009. Certifications will be issued and credits will be allocated to projects in annual allocation rounds. The initial allocation round was conducted in 2009–10, and If necessary, additional allocation round in 2010–11.

Affected Public: Private Sector: Businesses or other for-profits.

Estimated Total Burden Hours: 110,000.

OMB Number: 1545–2152.

Type of Review: Extension without change of a currently approved collection.

Title: The Health Coverage Tax Credit (HCTC) Reimbursement Request Form.

Form: 14095.

Abstract: This form will be used by HCTC participants to request reimbursement for health plan premiums paid prior to the commencement of advance payments.

Affected Public: Individual or Households.

Estimated Total Burden Hours: 2,039.

OMB Number: 1545–2168.

Type of Review: Extension without change of a currently approved collection.

Title: Tax Return Preparer Complaint.

Form: 14157.

Abstract: This form will be used by taxpayers to report allegations of misconduct by tax return preparers. The form was created specifically for tax return preparer complaints and includes items necessary for the IRS to effectively

evaluate the complaint and route to the appropriate function.

Affected Public: Private Sector: Businesses or other for-profits.

Estimated Total Burden Hours: 1,500.

OMB Number: 1545–2235.

Type of Review: Extension without change of a currently approved collection.

Title: Reimbursable Agreement-Non-Federal Entities.

Form: 14417.

Abstract: Information collected with this form will be used by the IRS to enter into cost reimbursable agreements with state, local, foreign government, and commercial entities. The authority to perform services on a cost reimbursable basis is contained in Section 6103(p) of the Internal Revenue Code. Performance of services is authorized when consistent with the basic public obligations of the IRS.

Affected Public: State, Local, and Tribal Governments.

Estimated Total Burden Hours: 150.

Dawn D. Wolfgang,

Treasury PRA Clearance Officer.

[FR Doc. 2013–07169 Filed 3–27–13; 8:45 am]

BILLING CODE 4830–01–P

DEPARTMENT OF THE TREASURY

Proposed Collection; Comment Request

ACTION: Notice and request for comments.

SUMMARY: The Department of the Treasury, as part of its continuing effort to reduce paperwork burdens, invites the general public and other Federal agencies to comment on revisions in 2014 of two currently approved information collections that are proposed for approval by the Office of Management and Budget. The Office of International Affairs within the Department of the Treasury is soliciting comments concerning the revisions of the Treasury International Capital (TIC) Forms SHL/SHLA and SHC/SHCA.

DATES: Written comments should be received on or before May 28, 2013 to be assured of consideration.

ADDRESSES: Direct all written comments to Dwight Wolkow, International Portfolio Investment Data Systems, Department of the Treasury, Room 5422 MT, 1500 Pennsylvania Avenue NW., Washington DC 20220. In view of possible delays in mail delivery, you may also wish to send a copy to Mr. Wolkow by email (*comments2TIC@do.treas.gov*) or FAX (202–622–2009). Mr. Wolkow can also be reached by telephone (202–622–1276).

FOR FURTHER INFORMATION CONTACT: Copies of the proposed forms and instructions are available on the Treasury International Capital (TIC) Forms Web page for ''Forms SHL/SHLA & SHC/SHCA'', at: *http://www.treasury.gov/resource-center/data-chart-center/tic/Pages/forms-sh.aspx*. Requests for additional information should be directed to Mr. Wolkow.

SUPPLEMENTARY INFORMATION:

Title: Treasury International Capital (TIC) Form SHL/SHLA ''Foreign-Residents' Holdings of U.S. Securities, including Selected Money Market Instruments''; TIC Form SHC/SHCA ''U.S. Ownership of Foreign Securities, including Selected Money Market Instruments.''

OMB Numbers: 1505–0123 (Form SHL/SHLA); 1505–0146 (Form SHC/SHCA).

Abstract: These forms are used to conduct annual surveys of cross-border holdings of securities for portfolio investment purposes—Form SHL/SHLA collects foreign-residents' holdings of U.S. securities; and Form SHC/SHCA collects U.S. residents' ownership of foreign securities. These data are used by the U.S. Government in the formulation of international financial and monetary policies, and for the computation of the U.S. balance of payments accounts and of the U.S. international investment position. These data are also used to provide information to the public and to meet international reporting commitments. The SHC/SHCA survey is part of an internationally coordinated effort under the auspices of the International Monetary Fund to improve data on securities worldwide. Most of the major industrial and financial countries conduct similar surveys.

Both data collections have large benchmark surveys conducted every five years, and smaller annual surveys conducted in the non-benchmark years. The data collected under an annual survey are used in conjunction with the results of the preceding benchmark survey to make economy-wide estimates for that non-benchmark year. Currently, the determination of who must report in the annual surveys is based primarily on the data submitted during the preceding benchmark survey. The data requested in the annual survey will generally be the same as requested in the preceding benchmark report. Form SHL is used for the benchmark survey of all significant U.S.-resident custodians and U.S.-resident issuers of securities regarding foreign-residents' holdings of U.S. securities. In non-benchmark years Form SHLA is used for the annual surveys of primarily the largest U.S.-resident custodians and issuers. Form SHC is used for the benchmark survey of all significant U.S.-resident custodians and end-investors regarding U.S. ownership of foreign securities. In non-benchmark years Form SHCA is used for the annual surveys of primarily the very largest U.S.-resident custodians and end-investors.

Current Actions: The proposed changes will: (1) Modify the determination of who must report on the annual surveys to include consideration of those filing the monthly TIC Form SLT report; (2) streamline Forms SHL/SHLA and SHC/SHCA to provide consistency among the annual surveys and the TIC SLT (details of the changes follow below); and (3) update and clarify the instructions for both forms, including updating how to submit reports and the line-by-line instructions. The changes will improve overall survey reporting.

The remainder of the Current Actions section shows in more detail the proposed changes to streamline Form SHC/SHCA and Form SHL/SHLA, organized by schedule:

The following changes apply to Schedule 1: Reporter Contact Information and Summary of Financial Information:

Changes for both Form SHCA and Form SHLA

a. Minor changes in wording concerning the reporter's identification number, name, and contacts.

b. Lines that previously lacked numbers now have them, resulting in renumbering of subsequent lines.

c. In ''Reporter Type'', ''Banks'' is replaced with ''Depository Institution'', ''Mutual fund or investment trust'' is replaced with ''Fund/Fund Manager/Sponsor (excluding pension fund)'', and ''Other Financial Organization'' is specified to include ''BHCs (Bank Holding Companies) and FHCs (Financial Holding Companies).''

d. The line for a contact fax number is eliminated.

Form SHCA Changes (only)

a. ''Industrial Classification Code'' is replaced with ''Reporter Type''.

Form SHLA Changes (only)

a. In ''Reporter Type,'' ''Pension Fund'' is added.

The following changes apply to Schedule 2: Details of Securities:

Changes for both Form SHCA and Form SHLA

a. Minor changes in wording throughout to remove instruction comments.

b. Lines are renumbered.

c. The line for ''Security ID System'' is now consistent across Forms SHCA and SHLA. The new categories are: 1 = CUSIP, 2 = ISIN, 3 = CINS, 4 = Common Code, 5 = SEDOL, 6 = Internally Generated, and 7 = Other.

d. The lines applying to debt securities (including asset-backed securities) are reorganized, though the substance of the information to be reported remains unchanged.

e. The ''Term Indicator'' line is eliminated.

f. The ''Intentionally Left Blank'' lines are eliminated.

g. ''Market values'' is replaced by ''Fair values''.

Form SHCA Changes (only)

a. A new item requires reporters to specify whether they are reporting the security as ''End-investors'' or ''Custodians''.

b. ''Security Type'' is now consistent with Forms SHLA. ''Unstripped bond or note and all other asset-backed debt'' is replaced by security types ''Bond or note, unstripped'', ''Bond or note, stripped'', and ''All other debt''.

c. ''Ownership Code'' is replaced with ''Type of U.S. Owner''. A new, more precise system of categories replaces the old categories. The new categories are: 1 = Depository Institution; 2 = Fund or Other Investment Vehicle (excluding pension and mutual funds); 3 = Pension Fund; 4 = Mutual Fund, 5 = Insurance Company; 6 = Other Financial Organization (including BHC and FHC); 7 = Nonfinancial Organization excluding Individual/Household; 7 = Individual or Household.

d. ''Type of Foreign Issuer'' is added to identify if the security is issued by ''Foreign Official Institutions'' or ''All Other Foreigners''.

Form SHLA Changes (only)

a. Within ''Type of Issuer'', ''Other'' is eliminated and ''Depository Institution,'' ''Other Financial Organization (including BHC and FHC),'' and ''Nonfinancial Organization'' are added.

b. ''Issuer Code'' is replaced with ''Reporting as''.

The following changes apply to Schedule 3 of Form SHCA: Custodians Used:

a. Minor changes in wording throughout to remove instruction comments.

Type of Review: Revision of two currently approved data collections.

Affected Public: Business/Financial Institutions.

Forms: TIC SHL/SHLA, Schedules 1 and 2 (1505–0123).

TIC SHC/SHCA, Schedules 1, 2 and 3 (1505–0146).

Estimated Number of Respondents: For Form SHLA, an annual average (over five years) of 191, but this varies widely from about 540 in benchmark years (once every five years) to about 104 in other years (four out of every five years). For Form SHCA, an annual average (over five years) of 341, but this varies widely from about 955 in benchmark years (once every five years) to about 190 in other years (four out of every five years).

Estimated Average Time per Respondent: For Form SHLA, an annual average (over five years) of about 168 hours, but this will vary widely from respondent to respondent. (a) In the year of a benchmark survey, which is conducted once every five years, it is estimated that exempt respondents will require an average of 17 hours; for custodians of securities, the estimate is a total of 321 hours on average, but this figure will vary widely for individual custodians; and for issuers of securities that have data to report and are not custodians, the estimate is 61 hours on average. (b) In a non-benchmark year, which occurs four years out of every five years: For the largest custodians of securities, the estimate is a total of 486 hours on average; and for the largest issuers of securities that have data to report and are not custodians, the estimate is 110 hours on average.

For Form SHCA, an annual average (over five years) of about 169 hours, but this will vary widely from respondent to respondent. (a) In the year of a benchmark survey, which is conducted once every five years, it is estimated that exempt respondents will require an average of 17 hours; custodians of securities providing security-by-security information will require an average of 361 hours, but this figure will vary widely for individual custodians; end-investors providing security-by-security information will require an average of 121 hours; and end-investors and custodians employing U.S. custodians will require an average of 41 hours. (b) In a non-benchmark year, which occurs four years out of every five years: Custodians of securities providing security-by-security information will require an average of 546 hours (because only the largest U.S.-resident custodians will report), but this figure will vary widely for individual custodians; end-investors providing security-by-security information will require an average of 146 hours; and reporters entrusting their foreign securities to U.S. custodians will require an average of 49 hours. The exemption level, which applies only in benchmark years, for custodians is the holding of less than $100 million in foreign securities and for end-investors the owning of less than $100 million in foreign securities with a single custodian.

Estimated Total Annual Burden Hours: For Form SHLA, an annual average (over five years) of 32,060 hours. For Form SHCA, an annual average (over five years) of 57,630 hours.

Frequency of Response: Annual.

Request for Comments: Comments submitted in response to this notice will be summarized and/or included in the request for Office of Management and Budget approval. All comments will become a matter of public record. The public is invited to submit written comments concerning: (a) Whether the Survey is necessary for the proper performance of the functions of the Office of International Affairs within the Department of the Treasury, including whether the information collected will have practical uses; (b) the accuracy of the above estimate of the burdens; (c) ways to enhance the quality, usefulness and clarity of the information to be collected; (d) ways to minimize the reporting and/or record keeping burdens on respondents, including the use of information technologies to automate the collection of the data requested; and (e) estimates of capital or start-up costs of operation, maintenance and purchase of services to provide the information requested.

Dwight Wolkow,

Administrator, International Portfolio Investment Data Systems.

[FR Doc. 2013–07172 Filed 3–27–13; 8:45 am]

BILLING CODE 4810–25–P

DEPARTMENT OF THE TREASURY

Community Development Financial Institutions Fund

Proposed Collection: Comment Request

ACTION: Notice and request for comments.

SUMMARY: The Department of the Treasury, as part of its continuing effort to reduce paperwork and respondent burden, invites the general public and other Federal agencies to take this opportunity to comment on proposed and/or continuing information collections, as required by the Paperwork Reduction Act of 1995, Public Law 104–13 (44 U.S.C. 3506(c)(2)(A)). Currently, the Community Development Financial Institutions (CDFI) Fund, Department of the Treasury, is soliciting comments concerning the Certification of Material Events Form.

DATES: Written comments should be received on or before May 28, 2013 to be assured of consideration.

ADDRESSES: Direct all written comments to Bob Mulderig, Certification, Compliance Monitoring and Evaluation Program Manager, Community Development Financial Institutions Fund, U.S. Department of the Treasury, 1500 Pennsylvania Avenue NW., Washington, DC 20220. Written comments may also be sent by email to *CCME@cdfi.treas.gov.* Please include the Subject line ''Comments on the Certification of Material Events Form.''

FOR FURTHER INFORMATION CONTACT: Requests for additional information or copies of the form(s) and instructions should be directed to Bob Mulderig, Certification, Compliance Monitoring and Evaluation, Community Development Financial Institutions Fund, U.S. Department of the Treasury, 1500 Pennsylvania Avenue NW., Washington, DC 20220, by email to *cdfihelp@cdfi.treas.gov,* or by phone to (202) 653–0423 (this is not a toll-free number).

SUPPLEMENTARY INFORMATION:

OMB Number: 1559–0037.

Title: Certification of Material Events Form.

Form: CDFI 0036.

Abstract: This specific information collection will capture information related to Community Development Entity (CDE)/New Markets Tax Credit material events, as well as Community Development Financial Institutions (CDFI) material events, in a single form. The revised document will provide a more comprehensive list of potential material events to inform CDEs and CDFIs of the events that need to be reported to the CDFI Fund and will require the CDE or CDFI to affirmatively indicate, through a series of specific questions, whether or not the event will have an impact on areas of operations that are of particular concern to the CDFI Fund. This information will enable the CDFI Fund to better manage the Material Events review process and monitor the effects of Material Events on certification or compliance status.

Current Actions: Extension.

Type of Review: Regular review.

Affected Public: CDFIs and CDEs; including business or other for-profit institutions, non-profit entities, and State, local and Tribal entities.

Estimated Number of Respondents: 200.

Estimated Annual Time per Respondent: .25 Hours.

Estimated Total Annual Burden Hours: 50 Hours.

Request for Comments: Comments submitted in response to this notice will be summarized and/or included in the request for OMB approval. All comments will become a matter of public record. Comments are invited on: (a) Whether the collection of information is necessary for the proper performance of the functions of the agency, including whether the information shall have practical utility; (b) the accuracy of the agency's estimate of the burden of the collection of information; (c) ways to enhance the quality, utility and clarity of the information to be collected; (d) ways to minimize the burden of the collection of information on respondents, including through the use of automated collection techniques or other forms of information technology; and (e) estimates of capital or start-up costs and costs of operation, maintenance, and purchase of services to provide information.

Authority: 12 U.S.C. 4701 *et seq.*; 26 U.S.C. § 45D.

Dated: March 25, 2013.

Dawn D. Wolfgang,

Treasury PRA Clearance Officer.

[FR Doc. 2013–07228 Filed 3–27–13; 8:45 am]

BILLING CODE 4810–70–P

DEPARTMENT OF THE TREASURY

Office of Foreign Assets Control

Identification of One Individual, Fourteen Entities, and Eight Vessels Pursuant to the Iranian Transactions and Sanctions Regulations and Executive Order 13599

AGENCY: Office of Foreign Assets Control, Treasury.

ACTION: Notice.

SUMMARY: The Treasury Department's Office of Foreign Assets Control (''OFAC'') is publishing the names of one individual and fourteen entities identified as the Government of Iran, and eight vessels identified as the property of the Government of Iran under the Iranian Transactions and Sanctions Regulations, 31 CFR part 560 (''ITSR''), and Executive Order 13599.

DATES: The identification by the Director of OFAC of the individual, entities, and vessels identified in this notice, pursuant to the ITSR and Executive Order 13599 is effective on March 14, 2013.

FOR FURTHER INFORMATION CONTACT: Assistant Director, Sanctions Compliance and Evaluation, Office of Foreign Assets Control, Department of the Treasury, Washington, DC 20220, Tel.: 202/622–2490.

SUPPLEMENTARY INFORMATION:

Electronic and Facsimile Availability

This document and additional information concerning OFAC are available from OFAC's Web site (*www.treas.gov/ofac*) or via facsimile through a 24-hour fax-on-demand service, Tel.: 202/622–0077.

Background

On February 5, 2012, the President issued Executive Order 13599, ''Blocking Property of the Government of Iran and Iranian Financial Institutions'' (the ''Order''). Section 1(a) of the Order blocks, with certain exceptions, all property and interests in property of the Government of Iran, including the Central Bank of Iran, that are in the United States, that hereafter come within the United States, or that are or hereafter come within the possession or control of any United States person, including any foreign branch.

Section 7 (d) of the Order defines the term ''Government of Iran'' to mean the Government of Iran, any political subdivision, agency, or instrumentality thereof, including the Central Bank of Iran, and any person owned or controlled by, or acting for or on behalf of, the Government of Iran.

Section 560.211 of the ITSR implements Section 1(a) of the Order. Section 560.304 defines the term ''Government of Iran'' to include: ''(a) The state and the Government of Iran, as well as any political subdivision, agency, or instrumentality thereof, including the Central Bank of Iran; (b) Any person owned or controlled, directly or indirectly, by the foregoing; and (c) Any person to the extent that such person is, or has been, since the effective date, acting or purporting to act, directly or indirectly, for or on behalf of any of the foregoing; and (d) Any other person determined by the Office of Foreign Assets Control to be included within [(a) through (c)].'' Section 560.313 of the ITSR further defines an ''entity owned or controlled by the Government of Iran'' to include ''any corporation, partnership, association, or other entity in which the Government of Iran owns a 50 percent or greater interest or a controlling interest, and any entity which is otherwise controlled by that government.''

On March 14, 2013, the Director of OFAC identified one individual and fourteen entities as meeting the definition of the Government of Iran, and identified eight vessels as the property of the Government of Iran pursuant to the Order and the ITSR.

The listing for the individual, entities, and vessels is as follows:

Individual and Entities

1. CAMBIS, Dimitris (a.k.a. KAMPIS, Dimitrios Alexandros; a.k.a. KLIMT, Gustav); DOB 14 Oct 1963 (individual) [IRAN] [ISA].
2. IMPIRE SHIPPING COMPANY (a.k.a. IMPIRE SHIPPING; a.k.a. IMPIRE SHIPPING LIMITED), Greece [IRAN] [ISA].
3. LIBRA SHIPPING SA (a.k.a. LIBRA SHIPPING), 3, Xanthou Street, Glyfada 16674, Greece [IRAN].
4. MONSOON SHIPPING LTD, c/o of Libra Shipping SA, 3, Xanthou Street, Glyfada, Athens 16674, Greece [IRAN].
5. KONING MARINE CORP, c/o of Libra Shipping SA, 3, Xanthou Street, Glyfada, Athens 16674, Greece [IRAN].
6. BLUE TANKER SHIPPING SA, c/o Libra Shipping SA, 3, Xanthou Street, Glyfada, Athens 16674, Greece [IRAN].
7. JUPITER SEAWAYS SHIPPING, c/o Libra Shipping SA, 3, Xanthou Street, Glyfada, Athens 16674, Greece [IRAN].
8. HERCULES INTERNATIONAL SHIP, c/o Libra Shipping SA, 3, Xanthou Street, Glyfada, Athens 16674, Greece [IRAN].
9. HERMIS SHIPPING SA, c/o Libra Shipping SA, 3, Xanthou Street, Glyfada, Athens 16674, Greece [IRAN].
10. GARBIN NAVIGATION LTD, c/o Libra Shipping SA, 3, Xanthou Street, Glyfada, Athens 16674, Greece [IRAN].
11. GRACE BAY SHIPPING INC, c/o Libra Shipping SA, 3, Xanthou Street, Glyfada, Athens 16674, Greece [IRAN].
12. SIMA GENERAL TRADING CO FZE (a.k.a. SIMA GENERAL TRADING & INDUSTRIALS FOR BUILDING MATERIAL CO FZE), Office No. 703 Office Tower, Twin Tower, Baniyas Rd., Deira, P.O. Box 49754, Dubai, United Arab Emirates [IRAN].
13. POLINEX GENERAL TRADING LLC, Health Care City, Umm Hurair Rd., Oud Mehta Offices, Block A, 4th Floor 420, Dubai, United Arab Emirates [IRAN].
14. ASIA ENERGY GENERAL TRADING (LLC), Suite 703, Twin Tower, Baniyas Street, Deira, Dubai, United Arab Emirates [IRAN].
15. SYNERGY GENERAL TRADING FZE, Sharjah—Saif Zone, Sharjah Airport International Free Zone, United Arab Emirates [IRAN].

Vessels

1. OCEAN PERFORMER Crude Oil Tanker Liberia flag; Vessel Registration Identification IMO 9013749 (vessel) [IRAN].
2. OCEAN NYMPH Crude Oil Tanker Panama flag; Vessel Registration Identification IMO 9180281 (vessel) [IRAN].
3. NEREYDA Crude Oil Tanker Panama flag; Vessel Registration Identification IMO 9011246 (vessel) [IRAN].
4. ZAP Crude Oil Tanker Liberia flag; Vessel Registration Identification IMO 9005235 (vessel) [IRAN].
5. SEAGULL Crude Oil Tanker Liberia flag; Vessel Registration Identification IMO 9107655 (vessel) [IRAN].
6. ULYSSES 1 Crude Oil Tanker Liberia flag; Vessel Registration Identification IMO 9177155 (vessel) [IRAN].
7. GLAROS Crude Oil Tanker Liberia flag; Vessel Registration Identification IMO 9077850 (vessel) [IRAN].
8. LEYCOTHEA Crude Oil Tanker Panama flag; Vessel Registration Identification IMO 9183934 (vessel) [IRAN].

Dated: March 14, 2013.

Adam J. Szubin,

Director, Office of Foreign Assets Control.

[FR Doc. 2013–07174 Filed 3–27–13; 8:45 am]

BILLING CODE 4810–AL–P

DEPARTMENT OF VETERANS AFFAIRS

Veterans' Rural Health Advisory Committee

Notice of Meeting

The Department of Veterans Affairs (VA) gives notice under the Federal Advisory Committee Act, 5 U.S.C. App. 2, that the Veterans' Rural Health Advisory Committee will hold a meeting on May 15–16, 2013, at 1722 I Street NW., Ground Level Conference Room, Washington, DC from 8 a.m. to 4 p.m. each day. The meeting is open to the public.

The purpose of the Committee is to advise the Secretary of Veterans Affairs on health care issues affecting enrolled Veterans residing in rural areas. The Committee examines programs and policies that impact the provision of VA health care to enrolled Veterans residing in rural areas, and discusses ways to improve and enhance VA services for these Veterans.

On the morning of May 15, the Committee will hear from its Chairman; the Acting Director of the Office of Rural Health (ORH); and the National Program Leader, Division of Family and Consumer Sciences National Institute of Food and Agriculture, United States Department of Agriculture. In the afternoon, the Committee will receive overviews of the ORH funded Project Deep Dive; the Eastern Resource Center Project; and the ORH State Database. On May 16, the Committee will hear opening remarks from its Chairman; discuss its fall meeting; and break into a workgroup session to work on the Committee's annual report. Public comments will be received at 3:45 p.m.

Individuals who speak are invited to submit a 1–2 page summary of their comments for inclusion in the official meeting record. Members of the public may also submit written statements for the Committee's review to Ms. Judy Bowie, Designated Federal Officer, ORH (10P1R), Department of Veterans Affairs, 810 Vermont Avenue NW., Washington, DC 20420, or email at *rural.health.inquiry@va.gov.* Any member of the public seeking additional information should contact Ms. Bowie at (202) 461–1929.

Dated: March 25, 2013.

By Direction of the Secretary.

Vivian Drake,

Committee Management Officer.

[FR Doc. 2013–07175 Filed 3–27–13; 8:45 am]

BILLING CODE P

Reader Aids

Federal Register

Vol. 78, No. 60

Thursday, March 28, 2013

CUSTOMER SERVICE AND INFORMATION

Federal Register/Code of Federal Regulations	
General Information, indexes and other finding aids	**202–741–6000**
Laws	**741–6000**
Presidential Documents	
Executive orders and proclamations	**741–6000**
The United States Government Manual	**741–6000**
Other Services	
Electronic and on-line services (voice)	**741–6020**
Privacy Act Compilation	**741–6064**
Public Laws Update Service (numbers, dates, etc.)	**741–6043**
TTY for the deaf-and-hard-of-hearing	**741–6086**

ELECTRONIC RESEARCH

World Wide Web

Full text of the daily Federal Register, CFR and other publications is located at: **www.fdsys.gov.**

Federal Register information and research tools, including Public Inspection List, indexes, and links to GPO Access are located at: **www.ofr.gov.**

E-mail

FEDREGTOC-L (Federal Register Table of Contents LISTSERV) is an open e-mail service that provides subscribers with a digital form of the Federal Register Table of Contents. The digital form of the Federal Register Table of Contents includes HTML and PDF links to the full text of each document.

To join or leave, go to **http://listserv.access.gpo.gov** and select *Online mailing list archives, FEDREGTOC-L, Join or leave the list (or change settings);* then follow the instructions.

PENS (Public Law Electronic Notification Service) is an e-mail service that notifies subscribers of recently enacted laws.

To subscribe, go to **http://listserv.gsa.gov/archives/publaws-l.html** and select *Join or leave the list (or change settings);* then follow the instructions.

FEDREGTOC-L and **PENS** are mailing lists only. We cannot respond to specific inquiries.

Reference questions. Send questions and comments about the Federal Register system to: **fedreg.info@nara.gov**

The Federal Register staff cannot interpret specific documents or regulations.

Reminders. Effective January 1, 2009, the Reminders, including Rules Going Into Effect and Comments Due Next Week, no longer appear in the Reader Aids section of the Federal Register. This information can be found online at **http://www.regulations.gov.**

CFR Checklist. Effective January 1, 2009, the CFR Checklist no longer appears in the Federal Register. This information can be found online at **http://bookstore.gpo.gov/.**

FEDERAL REGISTER PAGES AND DATE, MARCH

13771–13998 1
13999–14154 4
14155–14428 5
14429–14634 6
14635–14906 7
14907–15276 8
15277–15596 11
15597–15868 12
15869–16132 13
16133–16398 14
16399–16600 15
16601–16676 18
16777–17068 19
17069–17284 20
17285–17590 21
17591–17864 22
17865–18220 25
18221–18454 26
18455–18762 27
18763–19076 28

CFR PARTS AFFECTED DURING MARCH

At the end of each month the Office of the Federal Register publishes separately a List of CFR Sections Affected (LSA), which lists parts and sections affected by documents published since the revision date of each title.

2 CFR

Proposed Rules:
Ch. I 17300
Ch. II 17300
Ch. XXVII 17888

3 CFR

Proclamations:
8933 14429
8934 14431
8935 14433
8936 14435
8937 14627
8938 14629
8939 14631
8940 17069
8941 18453
8942 18455
8943 18763
8944 18769
8945 18777
8946 18783
8947 18789

Executive Orders:
11958 (revoked by EO 13637) 16131
12777 (amended by EO 13638) 17589
12957 (See Notice of March 12, 2013) 16397
12959 (See Notice of March 12, 2013) 16397
13059 (See Notice of March 12, 2013) 16397
13222 (amended by EO 13637) 16131
13553 (See Notice of March 12, 2013) 16397
13574 (See Notice of March 12, 2013) 16397
13590 (See Notice of March 12, 2013) 16397
13599 (See Notice of March 12, 2013) 16397
13606 (See Notice of March 12, 2013) 16397
13608 (See Notice of March 12, 2013) 16397
13622 (See Notice of March 12, 2013) 16397
13628 (See Notice of March 12, 2013) 16397
13637 16131
13638 17589

Administrative Orders:
Memorandums:
Memorandum of February 20, 2013 13997
Notices:
Notice of March 1, 2013 (see EO 13288 of 3/6/2003; EO 13391 of 11/22/2005; EO 13469 of 7/25/2008) 14427
Notice of March 12, 2013 16397
Order of March 1, 2013 14633

5 CFR

2640 14437

Proposed Rules:
532 18252
850 14233
Ch. XXVIII 17888

6 CFR

Proposed Rules:
5 15889

7 CFR

7 13771
20 16777
51 14907
205 13776
761 13999
762 13999
905 13777
1230 14909

Proposed Rules:
20 16819
28 18898
60 15645
65 15645
457 17606
905 .....14236, 18899

8 CFR

1 18457
210 18457
212 18457
214 18457
215 18457
231 18457
235 18457
245 18457
245a 18457
247 18457
253 18457
264 18457
274a 18457
286 18457

Proposed Rules:
Ch. V 17888

9 CFR

417 14635
424 14636

10 CFR

20 16922
30 16922
32 16922

33 16922
34 16922
35 16922
36 16922
37 16922
39 16922
51 16922
71 16922
72 16601
73 16922
Proposed Rules:
72 16619
170 14880
171 14800
429 ....15653, 15808
430 ....14467, 14717, 15808, 15891, 16443, 18253
431 ....14024, 17890

12 CFR

998 15869
1005 18221
1026 18795
1730 15869
Proposed Rules:
234 14024
701 17136
1090 18902

14 CFR

21 16779
25 ....14005, 14007, 14155
33 15597
39 ....14158, 14160, 14162, 14164, 14442, 14640, 14642, 14644, 14647, 15277, 15279, 15281, 15599, 15870, 15874, 16604, 17071, 17073, 17075, 17076, 17079, 17080, 17082, 17285, 17290, 17294, 17297, 17591, 17593, 17865, 18224, 18226, 18228, 18230
71 ....14649, 14651, 14652, 14653, 14909, 14911, 16399, 16400, 17083, 17084, 18232, 18798, 18799, 18800, 18801, 18802
73 17085
97 ....14009, 14010, 16606, 16608, 18803, 18806
117 14166
121 ....14166, 15876
129 14912
254 14913
Proposed Rules:
25 13835
39 ....14029, 14467, 14469, 14719, 14722, 14726, 14729, 14731, 14734, 14934, 15332, 15335, 15655, 15658, 16196, 16198, 16200, 16620, 17300, 18255, 18257, 18529, 18531, 18533, 18917, 18920, 18922, 18925
71 ....13843, 14031, 14032, 14473, 14474, 14475, 14477, 14478, 14479, 16202, 16821, 16823, 18259, 18261, 18262, 18263, 18264, 18266, 18267, 18268, 18269, 18271, 18928, 18929, 18931
91 18932

15 CFR

30 16366
744 ....14914, 18808
774 18814
Proposed Rules:
400 14238
922 ....16622, 16628

16 CFR

4 16611
1112 15836
1118 15836
Proposed Rules:
305 18272
1500 15660
1634 17140

17 CFR

201 14179
Proposed Rules:
242 18084
249 18084

18 CFR

11 15602
38 14654
40 18817
366 16133

19 CFR

12 14183

20 CFR

404 18837
1001 15283

21 CFR

14 17086
56 16401
73 14664
172 14664
173 14664
176 14664
177 14664
178 14664
184 14664
189 ....14012, 14664
510 ....14667, 17595, 17866
520 ....14667, 17595
522 ....14667, 17595, 17866
524 ....17595, 17866
529 ....14667, 17595, 17866
558 ....14667, 17595
700 14012
814 18233
822 18233
862 18233
864 18233
866 18233
868 18233
870 18233
872 18233
874 18233
876 18233
878 18233
880 18233
882 18233
884 18233
886 18233
888 18233
890 ....14013, 14015, 18233
892 18233
1005 18234
Proposed Rules:
Ch. I 16824, 17611
1 17142
16 ....17142, 17155
106 17142
110 17142
112 17155
114 17142
117 ....15894, 17142
120 17142
123 ....17142, 18273
129 17142
179 17142
211 17142
870 17890
Ch. II 17888
1308 17895

23 CFR

Proposed Rules:
771 15925

24 CFR

970 18234
Proposed Rules:
203 17303
579 18726

25 CFR

11 14017
Proposed Rules:
226 16629

26 CFR

1 ....17024, 17053, 17868, 18234, 18235
48 ....15877, 15878
602 ....17024, 17053
Proposed Rules:
1 ....15337, 16445, 17066, 17612, 17900
31 17612
54 ....16445, 17313
57 ....14034, 17612
301 ....14939, 15337, 16446, 17901

27 CFR

Proposed Rules:
9 14046
Ch. II 17888

28 CFR

16 14669
58 ....16138, 16159
Proposed Rules:
Ch. I 17888
Ch. III 17888
Ch. V 17888
Ch. VI 17888

29 CFR

2520 13781
2560 13797
2571 13797
4022 16401
4044 16401
Proposed Rules:
2590 17313

30 CFR

Proposed Rules:
701 18430
736 18430
737 18430
738 18430
750 18430
950 16204

31 CFR

561 16403
Proposed Rules:
Ch. IX 17888

32 CFR

505 18473
518 18473
706 18846

33 CFR

100 ....13811, 16780, 17087, 17598, 18235, 18475
117 ....14185, 14444, 14446, 15292, 15293, 15878, 15879, 16410, 16411, 17090, 18477, 18478, 18479, 18480, 18481, 18848, 18849
165 ....13811, 14185, 14188, 15293, 16177, 17094, 17097, 17099, 17869, 18238
401 16180
Proposed Rules:
100 ....16205, 17613, 18274, 18277
101 ....17782, 18534
104 ....17782, 18534
105 ....17782, 18534
106 ....17782, 18534
117 18933
165 ....16208, 16211, 17613

34 CFR

Subtitle A 18682
600 17598
602 17598
603 17598
668 17598
682 17598
685 17598
686 17598
690 17598
691 17598
Proposed Rules:
75 16447
Ch. III 14480, 14483, 14947, 16447, 18933

36 CFR

7 ....14447, 14673
218 18481
Proposed Rules:
1195 16448

37 CFR

1 ....16182, 17102
41 17102
42 17871

38 CFR

51 18240
Proposed Rules:
51 18280

39 CFR

Proposed Rules:
111 16213

40 CFR

49 17836
52 ....14020, 14450, 14681, 15296, 16412, 16783, 16785, 16790, 17108, 18241, 18244, 18849, 18853
55 14917
58 16184
60 14457

63 14457
80 14190
81 16792
136 14457
180 ....14461, 15880, 17123, 17600, 18504, 18511, 18519
271 15299
300 16612
721 18526
Proposed Rules:
35 16630
49 16825
52 ....15664, 15895, 16449, 16452, 16826, 17157, 17161, 17168, 17304, 17902, 18280, 18936
81 ....16827, 17902, 17915
147 14951
180 14487
271 15338
372 ....14241, 15913
Ch. IV 17888

41 CFR

Proposed Rules:
Ch. 128 17888

42 CFR

88 18855
405 16614
411 16614
412 ....14689, 15882, 16614
413 15882
419 16614
424 ....15882, 16614
476 15882
483 16795
488 16795
489 ....16614, 16795
498 16795
Proposed Rules:
84 18535
414 16632
419 16632

43 CFR

Proposed Rules:
3900 18547
3920 18547
3930 18547

44 CFR

64 ....14694, 17130, 17133
67 ....14697, 14700
Proposed Rules:
67 ....14737, 14738
201 13844
204 14740

45 CFR

153 ....15410, 15541
155 15410
156 ....15410, 15541
157 15410
158 15410
800 ....15560, 18246
Proposed Rules:
144 17313
146 17313
147 17313
155 15553
156 15553
Ch. V 17888

46 CFR

Proposed Rules:
10 17917
67 14053

47 CFR

1 ....15615, 18246, 18527
2 14920
10 16806
25 ....14920, 17604
43 15615
54 ....13936, 16808
63 15615
64 ....14701, 18246
73 ....16816, 18527
74 18527
Proposed Rules:
2 14952
54 ....14957, 16456, 17624
73 ....14060, 14490
95 16827

48 CFR

215 18865
225 18876
252 ....18865, 18876, 18877
Proposed Rules:
4 14746
13 14746
14 14746
15 14746
19 14746
52 17176
Ch. 28 17888
538 18285
552 18285

49 CFR

71 15883
105 15303
171 15303
172 ....14702, 15303, 17874
173 ....14702, 15303, 17874
176 ....14702, 17874
177 15303
178 ....14702, 15303, 17874
180 15303
213 16052
219 14217
234 16414
238 16052
382 16189
383 ....16189, 17875
384 17875
390 16189
391 16189
395 16189
396 16189
Proposed Rules:
553 18285
571 ....13853, 15920
622 15925
633 16460
1540 18287

50 CFR

17 ....14022, 15624
300 16423
622 ....14225, 15641, 15642, 16817, 17882, 18247
648 ....13812, 14226, 14230
660 ....18249, 18879
665 15885
679 ....13812, 13813, 14465, 14932, 15643, 16195, 16617, 17135, 17884, 17885, 17886, 18528, 18896
Proposed Rules:
17 ....14245, 15925, 16828, 18000, 18936, 18938, 18943
20 14060
100 14755
216 15669
300 ....14490, 17919
600 17625
622 ....14069, 14503, 15338, 15672, 17178, 17336
635 17625
648 ....15674, 16220, 16574, 18188, 18947
660 14259
665 18302
679 ....14490, 17340
680 ....15677, 17341

LIST OF PUBLIC LAWS

This is a continuing list of public bills from the current session of Congress which have become Federal laws. It may be used in conjunction with ''P L U S'' (Public Laws Update Service) on 202–741–6043. This list is also available online at *http://www.archives.gov/federal-register/laws*.

The text of laws is not published in the **Federal Register** but may be ordered in ''slip law'' (individual pamphlet) form from the Superintendent of Documents, U.S. Government Printing Office, Washington, DC 20402 (phone, 202–512–1808). The text will also be made available on the Internet from GPO's Federal Digital System (FDsys) at *http://www.gpo.gov/fdsys*. Some laws may not yet be available.

H.R. 933/P.L. 113–6
Consolidated and Further Continuing Appropriations Act, 2013 (Mar. 26, 2013; 127 Stat. 198)

Last List March 15, 2013

Public Laws Electronic Notification Service (PENS)

PENS is a free electronic mail notification service of newly enacted public laws. To subscribe, go to *http://listserv.gsa.gov/archives/publaws-l.html*

Note: This service is strictly for E-mail notification of new laws. The text of laws is not available through this service. **PENS** cannot respond to specific inquiries sent to this address.