AUTHENTICATED
U.S. GOVERNMENT
INFORMATION
GPO

FEDERAL REGISTER

Vol. 78 Friday,

No. 22 February 1, 2013

Pages 7255–7640

OFFICE OF THE FEDERAL REGISTER

The **FEDERAL REGISTER** (ISSN 0097–6326) is published daily, Monday through Friday, except official holidays, by the Office of the Federal Register, National Archives and Records Administration, Washington, DC 20408, under the Federal Register Act (44 U.S.C. Ch. 15) and the regulations of the Administrative Committee of the Federal Register (1 CFR Ch. I). The Superintendent of Documents, U.S. Government Printing Office, Washington, DC 20402 is the exclusive distributor of the official edition. Periodicals postage is paid at Washington, DC.

The **FEDERAL REGISTER** provides a uniform system for making available to the public regulations and legal notices issued by Federal agencies. These include Presidential proclamations and Executive Orders, Federal agency documents having general applicability and legal effect, documents required to be published by act of Congress, and other Federal agency documents of public interest.

Documents are on file for public inspection in the Office of the Federal Register the day before they are published, unless the issuing agency requests earlier filing. For a list of documents currently on file for public inspection, see *www.ofr.gov.*

The seal of the National Archives and Records Administration authenticates the Federal Register as the official serial publication established under the Federal Register Act. Under 44 U.S.C. 1507, the contents of the **Federal Register** shall be judicially noticed.

The **Federal Register** is published in paper and on 24x microfiche. It is also available online at no charge at *www.fdsys.gov*, a service of the U.S. Government Printing Office.

The online edition of the **Federal Register** is issued under the authority of the Administrative Committee of the Federal Register as the official legal equivalent of the paper and microfiche editions (44 U.S.C. 4101 and 1 CFR 5.10). It is updated by 6:00 a.m. each day the **Federal Register** is published and includes both text and graphics from Volume 59, 1 (January 2, 1994) forward. For more information, contact the GPO Customer Contact Center, U.S. Government Printing Office. Phone 202-512-1800 or 866-512-1800 (toll free). E-mail, *gpo@custhelp.com.*

The annual subscription price for the **Federal Register** paper edition is $749 plus postage, or $808, plus postage, for a combined **Federal Register, Federal Register** Index and List of CFR Sections Affected (LSA) subscription; the microfiche edition of the **Federal Register** including the **Federal Register** Index and LSA is $165, plus postage. Six month subscriptions are available for one-half the annual rate. The prevailing postal rates will be applied to orders according to the delivery method requested. The price of a single copy of the daily **Federal Register,** including postage, is based on the number of pages: $11 for an issue containing less than 200 pages; $22 for an issue containing 200 to 400 pages; and $33 for an issue containing more than 400 pages. Single issues of the microfiche edition may be purchased for $3 per copy, including postage. Remit check or money order, made payable to the Superintendent of Documents, or charge to your GPO Deposit Account, VISA, MasterCard, American Express, or Discover. Mail to: U.S. Government Printing Office—New Orders, P.O. Box 979050, St. Louis, MO 63197-9000; or call toll free 1-866-512-1800, DC area 202-512-1800; or go to the U.S. Government Online Bookstore site, see *bookstore.gpo.gov.*

There are no restrictions on the republication of material appearing in the **Federal Register.**

How To Cite This Publication: Use the volume number and the page number. Example: 77 FR 12345.

Postmaster: Send address changes to the Superintendent of Documents, Federal Register, U.S. Government Printing Office, Washington, DC 20402, along with the entire mailing label from the last issue received.

SUBSCRIPTIONS AND COPIES

PUBLIC

Subscriptions:

Paper or fiche	**202–512–1800**
Assistance with public subscriptions	**202–512–1806**

General online information **202–512–1530; 1–888–293–6498**

Single copies/back copies:

Paper or fiche	**202–512–1800**
Assistance with public single copies	**1–866–512–1800 (Toll-Free)**

FEDERAL AGENCIES

Subscriptions:

Paper or fiche	**202–741–6005**
Assistance with Federal agency subscriptions	**202–741–6005**

FEDERAL REGISTER WORKSHOP

THE FEDERAL REGISTER: WHAT IT IS AND HOW TO USE IT

FOR: Any person who uses the Federal Register and Code of Federal Regulations.

WHO: Sponsored by the Office of the Federal Register.

WHAT: Free public briefings (approximately 3 hours) to present:

1. The regulatory process, with a focus on the Federal Register system and the public's role in the development of regulations.
2. The relationship between the Federal Register and Code of Federal Regulations.
3. The important elements of typical Federal Register documents.
4. An introduction to the finding aids of the FR/CFR system.

WHY: To provide the public with access to information necessary to research Federal agency regulations which directly affect them. There will be no discussion of specific agency regulations.

WHEN: Tuesday, February 12, 2013
9 a.m.–12:30 p.m.

WHERE: Office of the Federal Register
Conference Room, Suite 700
800 North Capitol Street, NW.
Washington, DC 20002

RESERVATIONS: (202) 741–6008

Printed on recycled paper.

Contents

Federal Register

Vol. 78, No. 22

Friday, February 1, 2013

Advisory Council on Historic Preservation
See Historic Preservation, Advisory Council

Agricultural Marketing Service
NOTICES
Dairy Forward Pricing Program; Continuation of 2008 Farm Bill, 7387

Agriculture Department
See Agricultural Marketing Service
See Commodity Credit Corporation
See Farm Service Agency
See Forest Service
NOTICES
Advisory Committee on Biotechnology and 21st Century Agriculture; Renewal, 7387

Antitrust Division
NOTICES
Membership Changes Under National Cooperative Research and Production Act:
Advanced Media Workflow Association, Inc., 7455
Heterogeneous System Architecture Foundation, 7455
IMS Global Learning Consortium, Inc., 7456

Antitrust
See Antitrust Division

Blind or Severely Disabled, Committee for Purchase From People Who Are
See Committee for Purchase From People Who Are Blind or Severely Disabled

Census Bureau
NOTICES
Agency Information Collection Activities; Proposals, Submissions, and Approvals:
2014 New York City Housing and Vacancy Survey, 7393–7394

Centers for Medicare & Medicaid Services
NOTICES
Agency Information Collection Activities; Proposals, Submissions, and Approvals, 7433–7434
Medicare Program:
Two Membership Appointments to the Advisory Panel on Hospital Outpatient Payment, 7434–7435

Children and Families Administration
NOTICES
Agency Information Collection Activities; Proposals, Submissions, and Approvals, 7435–7436

Civil Rights Commission
NOTICES
Meetings:
Florida Advisory Committee, 7393

Coast Guard
RULES
Security Zones:
Protection of Military Cargo, Captain of the Port Zone Puget Sound, WA, 7265–7266
PROPOSED RULES
Port Authority Access to Facility Vulnerability Assessments and Integration of Security Systems, 7334–7336
Safety Zones:
Alaska Marine Highway System Port Valdez Ferry Terminal, Port Valdez; Valdez, AK, 7336–7339
Special Local Regulations:
Fajardo Offshore Grand Prix; Rada Fajardo; Fajardo, PR, 7331–7334

Commerce Department
See Census Bureau
See Foreign-Trade Zones Board
See International Trade Administration
See National Oceanic and Atmospheric Administration
See Patent and Trademark Office

Committee for Purchase From People Who Are Blind or Severely Disabled
NOTICES
Procurement List; Additions and Deletions, 7412–7414

Committee for the Implementation of Textile Agreements
NOTICES
Determinations Under Textile and Apparel Commercial Availability Provision of CAFTA-DR Agreement, 7414–7415

Commodity Credit Corporation
NOTICES
Agency Information Collection Activities; Proposals, Submissions, and Approvals:
Economic Assessment of Conservation Reserve Program Lands for Hunting, 7390–7391
Continuation of Farm Service Agency 2008 Farm Bill Programs, 7387–7389

Corporation for National and Community Service
NOTICES
Meetings; Sunshine Act, 7415

Defense Department
See Navy Department
NOTICES
Meetings:
Task Force on the Care, Management, and Transition of Recovering Wounded, Ill, and Injured Members of the Armed Forces, 7415–7416

Education Department
NOTICES
Agency Information Collection Activities; Proposals, Submissions, and Approvals:
High School Longitudinal Study of 2009 High School Transcript and 2013 Update Full Scale Study, etc., 7418–7419
Applications for New Awards:
Minority-Serving Institution Advanced Rehabilitation Research Training Projects, 7419–7424

Energy Department
See Federal Energy Regulatory Commission

PROPOSED RULES
Energy Conservation Program:
Energy Conservation Standards for Small, Large, and Very Large Commercial Package Air Conditioning and Heating Equipment, 7296–7304
Energy Efficiency Program for Commercial and Industrial Equipment:
Framework Document for Commercial and Industrial Fans and Blowers; Meetings, 7306–7307
Framework Document for Commercial and Industrial Pumps; Meetings, 7304–7306
NOTICES
Meetings:
National Coal Council, 7424

Environmental Protection Agency
RULES
National Emission Standards for Hazardous Air Pollutants for Area Sources:
Industrial, Commercial, and Institutional Boilers, 7488–7522
Pesticide Tolerances:
Alpha-Cypermethrin, 7266–7275
Tolerance Exemptions:
2-Pyrrolidone, 1-Ethenyl-, Polymer With Ethenol, 7275–7278
PROPOSED RULES
Approvals and Promulgations of Implementation Plans:
Idaho; Sandpoint PM10 Nonattainment Area Limited Maintenance Plan and Redesignation Request, 7340–7347
NOTICES
Environmental Impact Statements; Availability, etc., 7427
Meetings:
National and Governmental Advisory Committees to the U.S. Representative to the Commission for Environmental Cooperation, 7427–7428
Objections to State Operating Permits:
Noranda Alumina, LLC, Gramercy, LA, 7428
Proposed CERCLA Administrative Cashout Agreements:
Miller Salvage Superfund Site, Latham, OH, 7428–7429
Status of Motor Vehicle Budgets for Transportation Conformity Purposes:
Dallas-Fort Worth, TX; Adequacy of Reasonable Further Progress 8-Hour Ozone Motor Vehicle Emission Budget, 7429–7430

Executive Office of the President
See Management and Budget Office
See Presidential Documents

Farm Service Agency
NOTICES
Agency Information Collection Activities; Proposals, Submissions, and Approvals:
Economic Assessment of Conservation Reserve Program Lands for Hunting, 7390–7391

Federal Aviation Administration
RULES
Airworthiness Directives:
Airbus Airplanes, 7257–7259, 7261–7262
BAE Systems (Operations) Limited Airplanes, 7259–7261
EADS CASA (Type Certificate Previously Held by Construcciones Aeronauticas, S.A.) Airplanes, 7262–7264
PROPOSED RULES
Airworthiness Directives:
Bell Helicopter Textron Canada Helicopters, 7308–7311
Eurocopter Deutschland GmbH Helicopters, 7312–7313
NOTICES
Airport Improvement Program, 7476
Meetings:
Fifth Meeting: RTCA Special Committee 227, Standards of Navigation Performance, 7476–7477
Petitions for Exemptions:
Summary of Petition Received, 7477

Federal Communications Commission
RULES
Facilitating Use of Microwave for Wireless Backhaul and Other Uses:
Providing Additional Flexibility To Broadcast Auxiliary Service and Operational Fixed Microwave Licensees, 7278–7279
NOTICES
Meetings; Sunshine Act, 7430

Federal Emergency Management Agency
NOTICES
Proposed Flood Hazard Determinations, 7441–7442

Federal Energy Regulatory Commission
PROPOSED RULES
Small Generator Interconnection Agreements and Procedures, 7524–7639
NOTICES
Combined Filings, 7424–7426
Complaints:
Fallon, NV, and Truckee Donner Public Utility District v. NV Energy Operating Companies, 7426
Petitions for Declaratory Orders:
Council of the City of New Orleans, Mississippi Public Service Commission, and Arkansas Public Service Commission, 7427

Federal Highway Administration
NOTICES
Multistate Corridor Operations and Management Program, 7477–7479

Federal Motor Carrier Safety Administration
NOTICES
Qualifications of Drivers:
Application for Exemptions; National Association of Deaf, 7479–7484

Federal Reserve System
NOTICES
Changes in Bank Control:
Acquisitions of Shares of a Bank or Bank Holding Company, 7430
Formations of, Acquisitions by, and Mergers of Bank Holding Companies, 7430–7431

Federal Trade Commission
NOTICES
Proposed Consent Orders:
Cbr Systems, Inc., 7431–7433

Fish and Wildlife Service
NOTICES
Environmental Impact Statements; Availability, etc.:
General Conservation Plan for American Burying Beetle; Pipelines and Well Field Development, OK and TX, 7445–7447
Permit Applications:
Endangered Species, 7447–7448

Foreign Assets Control Office
NOTICES
Blocking or Unblocking of Persons and Property:
Designation of Seven Individuals and One Entity Involved in Transnational Criminal Organizations, 7485

Foreign-Trade Zones Board
NOTICES
Authorizations of Production Activities:
Albany Molecular Research, Inc., Foreign-Trade Zone 121, Albany, NY, 7394
Proposed Production Activities:
CNH America, LLC, Foreign-Trade Zone 41, Milwaukee, WI, 7394
GE Appliances, Subzone 29C, Louisville, KY, 7394–7395
T.C. Trading Co., Inc., Foreign-Trade Zone 129, Bellingham, WA, 7395

Forest Service
NOTICES
Environmental Impact Statements; Availability, etc.:
Motorized Travel Management Plan, Tonto National Forest; Gila, Maricopa, Pinal, and Counties, AZ, 7391–7393

Health and Human Services Department
See Centers for Medicare & Medicaid Services
See Children and Families Administration
See Health Resources and Services Administration
See Indian Health Service
See National Institutes of Health
PROPOSED RULES
Patient Protection and Affordable Care Act; Exchange Functions:
Eligibility for Exemptions; Miscellaneous Minimum Essential Coverage Provisions, 7348–7371

Health Resources and Services Administration
NOTICES
Statements of Organization, Functions and Delegations of Authority, 7436

Historic Preservation, Advisory Council
NOTICES
Meetings:
Proposed Alterations to Pawtucket Dam, Merrimack River, Lowell, MA, 7439–7440

Homeland Security Department
See Coast Guard
See Federal Emergency Management Agency
See U.S. Customs and Border Protection
NOTICES
Agency Information Collection Activities; Proposals, Submissions, and Approvals:
Support Anti-Terrorism by Fostering Effective Technologies Act Program, 7440–7441

Housing and Urban Development Department
NOTICES
Federal Property Suitable as Facilities To Assist the Homeless, 7442–7443
Redesign of American Housing Survey:
Request for Comments, 7443–7445

Indian Affairs Bureau
NOTICES
Environmental Impact Statements; Availability, etc.:
Proposed Spokane Tribe of Indians West Plains Casino and Mixed Use Project, Airway Heights, WA, 7448–7449

Indian Health Service
See Indian Health Service
NOTICES
Agency Information Collection Activities; Proposals, Submissions, and Approvals:
Contract Health Services Report, 7436–7437

Interior Department
See Fish and Wildlife Service
See Indian Affairs Bureau
See National Park Service

Internal Revenue Service
RULES
Health Insurance Premium Tax Credit, 7264–7265
PROPOSED RULES
Shared Responsibility Payment for Not Maintaining Minimum Essential Coverage, 7314–7331

International Trade Administration
NOTICES
Antidumping Duty Administrative Reviews; Results, Extensions, Amendments, etc.:
Stainless Steel Bar From India, 7395–7397
Antidumping or Countervailing Duty Orders, Findings, or Suspended Investigations:
Advance Notification of Sunset Reviews, 7397
Opportunity To Request Administrative Review, 7397–7399
Applications for Duty-Free Entry of Scientific Instruments, 7399–7400
Initiation of Five-Year Sunset Reviews, 7400–7401

International Trade Commission
NOTICES
Complaints:
Certain Fluorescent Reflector Lamps and Products and Components Containing Same, 7450–7451
Investigations; Terminations, Modifications and Rulings:
Clad Steel Plate From Japan, 7451
Sodium Hexametaphosphate From China, 7452–7454
Steel Wire Garment Hangers From Vietnam, 7452
Meetings; Sunshine Act, 7454–7455

Justice Department
See Antitrust Division

Labor Department
See Mine Safety and Health Administration
See Occupational Safety and Health Administration
NOTICES
Agency Information Collection Activities; Proposals, Submissions, and Approvals:
Hexavalent Chromium Standards for General Industry, Shipyard Employment, and Construction, 7456–7457
International Training Application, 7457–7458
Notice of Medical Necessity Criteria Under the Mental Health Parity and Addiction Equity Act, 7457

Management and Budget Office
PROPOSED RULES
Reform of Federal Policies Relating to Grants and Cooperative Agreements:
Cost Principles and Administrative Requirements, 7282–7296

Mine Safety and Health Administration
NOTICES
Petitions for Modification of Applications of Existing Mandatory Safety Standards, 7458–7460

National Aeronautics and Space Administration
NOTICES
Agency Information Collection Activities; Proposals, Submissions, and Approvals, 7463–7464

National Highway Traffic Safety Administration
NOTICES
Insurer Reporting Requirements:
Annual Report on Motor Vehicle Theft for 2007 Reporting Year, 7484

National Institutes of Health
NOTICES
Agency Information Collection Activities; Proposals, Submissions, and Approvals:
The Clinical Trials Reporting Program Database, 7437–7438
Exclusive Licenses:
Development of Human Monoclonal Antibodies Against DR4, 7438
Meetings:
Center for Scientific Review, 7438–7439

National Oceanic and Atmospheric Administration
RULES
Fisheries of the Caribbean, Gulf of Mexico, and South Atlantic:
Coastal Migratory Pelagic Resources of the Gulf of Mexico and South Atlantic; Trip Limit Increase, 7279–7280
Fisheries of the Exclusive Economic Zone Off Alaska:
Pacific Cod by Catcher/Processors Using Pot Gear in the Bering Sea, etc.; Closure, 7280
Pacific Cod by Vessels Using Pot Gear in the Western Regulatory Area of the Gulf of Alaska; Closure, 7280–7281
PROPOSED RULES
Fisheries Off West Coast States:
Pacific Coast Groundfish Fishery; Trawl Rationalization Program; Cost Recovery, 7371–7385
Western Pacific Fisheries:
Fishing in the Marianas Trench, Pacific Remote Islands, and Rose Atoll Marine National Monuments, 7385–7386
NOTICES
Agency Information Collection Activities; Proposals, Submissions, and Approvals:
Submissions Under the Coastal Zone Management Act Federal Consistency Requirements, 7402
Small Takes of Marine Mammals Incidental to Specified Activities:
Cape Wind's High Resolution Survey in Nantucket Sound, MA, 7402–7411
Vessel Monitoring Systems:
Certification of New VMS Unit for Use in Northeast Fisheries, 7411

National Park Service
NOTICES
Boundary Revision of Minuteman Missile National Historic Site, 7449–7450
Environmental Impact Statements; Availability, etc.:
Protecting and Restoring Native Ecosystems by Managing Non-Native Ungulates, Hawaii Volcanoes National Park, 7450

National Science Foundation
NOTICES
Meetings:
Large Scale Networking, Joint Engineering Team, 7464–7465
Large Scale Networking, Middleware and Grid Interagency Coordination Team, 7464

Navy Department
NOTICES
Environmental Impact Statements; Availability, etc.:
Land-Water Interface and Service Pier Extension, Naval Base Kitsap Bangor, Silverdale, WA; Public Scoping Meetings, 7416–7418

Nuclear Regulatory Commission
NOTICES
Agency Information Collection Activities; Proposals, Submissions, and Approvals, 7465
Meetings:
Advisory Committee on the Medical Uses of Isotopes, 7465–7466

Occupational Safety and Health Administration
NOTICES
Meetings:
Nationally Recognized Testing Laboratory Program, 7460–7463

Office of Management and Budget
See Management and Budget Office

Patent and Trademark Office
NOTICES
Public Hearings:
Harmonization of Substantive Patent Law; Request for Comments, 7411–7412

Presidential Documents
ADMINISTRATIVE ORDERS
American Recovery and Reinvestment Act of 2009; Waiver From Rescission of Unobligated Funds (Notice of November 21, 2012)
Correction, 7255

Securities and Exchange Commission
NOTICES
Applications for Deregistration Under the Investment Company Act, 7466–7467
Self-Regulatory Organizations; Proposed Rule Changes:
C2 Options Exchange, Inc., 7474–7476
Chicago Board Options Exchange, Inc., 7467–7470, 7472–7474
International Securities Exchange, LLC, 7470–7472

Surface Transportation Board
NOTICES
Trackage Rights Exemptions:
BNSF Railway Co. From Pemiscot County Port Authority, 7484–7485

Textile Agreements Implementation Committee
See Committee for the Implementation of Textile Agreements

Transportation Department
See Federal Aviation Administration
See Federal Highway Administration
See Federal Motor Carrier Safety Administration
See National Highway Traffic Safety Administration
See Surface Transportation Board

Treasury Department
See Foreign Assets Control Office
See Internal Revenue Service

U.S. Customs and Border Protection
NOTICES
Accreditations and Approvals of Commercial Gaugers and Laboratories:
Chemical and Petrochemical Inspections, LP, 7442

Separate Parts In This Issue

Part II
Environmental Protection Agency, 7488–7522

Part III
Energy Department, Federal Energy Regulatory Commission, 7524–7639

Reader Aids
Consult the Reader Aids section at the end of this page for phone numbers, online resources, finding aids, reminders, and notice of recently enacted public laws.

To subscribe to the Federal Register Table of Contents LISTSERV electronic mailing list, go to http://listserv.access.gpo.gov and select Online mailing list archives, FEDREGTOC-L, Join or leave the list (or change settings); then follow the instructions.

CFR PARTS AFFECTED IN THIS ISSUE

A cumulative list of the parts affected this month can be found in the Reader Aids section at the end of this issue.

2 CFR

Proposed Rules:

Ch. I 7282
Ch. II 7282

3 CFR

Administrative Orders:

Memorandums:
Notice of November 27, 2012 (Correction) 7255

10 CFR

Proposed Rules:

431 (3 documents) 7296, 7304, 7306

14 CFR

39 (4 documents) ...7257, 7259, 7261, 7262

Proposed Rules:

39 (2 documents) 7308, 7312

18 CFR

Proposed Rules:

35.....7524

26 CFR

1.....7264

Proposed Rules:

1.....7314

33 CFR

165.....7265

Proposed Rules:

100.....7331
105.....7334
165.....7336

40 CFR

63.....7488
180 (2 documents) 7266, 7275

Proposed Rules:

52.....7340
81.....7340

45 CFR

Proposed Rules:

155.....7348
156.....7348

47 CFR

101.....7278

50 CFR

622.....7279
679 (2 documents) 7280

Proposed Rules:

660.....7371
665.....7385

Federal Register
Vol. 78, No. 22
Friday, February 1, 2013

Presidential Documents

Title 3—

The President

Notice of November 21, 2012—Waiver From Rescission of Unobligated Funds Under the American Recovery and Reinvestment Act of 2009

Correction

In Presidential document 2012–28856 beginning on page 70883 in the issue of Tuesday, November 27, 2012, make the following correction:

On page 70883, the document identification heading on line one should read ''Notice of November 21, 2012''.

[FR Doc. C1–2012–28856
Filed 01–31–2013; 8:45 am]
Billing code 1505–01–D

Rules and Regulations

Federal Register
Vol. 78, No. 22
Friday, February 1, 2013

This section of the FEDERAL REGISTER contains regulatory documents having general applicability and legal effect, most of which are keyed to and codified in the Code of Federal Regulations, which is published under 50 titles pursuant to 44 U.S.C. 1510.

The Code of Federal Regulations is sold by the Superintendent of Documents. Prices of new books are listed in the first FEDERAL REGISTER issue of each week.

DEPARTMENT OF TRANSPORTATION

Federal Aviation Administration

14 CFR Part 39

[Docket No. FAA–2012–1074; Directorate Identifier 2012–NM–027–AD; Amendment 39–17331; AD 2013–02–10]

RIN 2120–AA64

Airworthiness Directives; Airbus Airplanes

AGENCY: Federal Aviation Administration (FAA), Department of Transportation (DOT).

ACTION: Final rule.

SUMMARY: We are adopting a new airworthiness directive (AD) for all Airbus Model A330–200 Freighter series airplanes; Model A330–200 and –300 series airplanes; and Model A340–200 and –300 series airplanes. This AD was prompted by a report of a manufacturing defect in certain rods installed in the belly fairing, which could lead to cracks at the crimped end of the rod. This AD requires an inspection of the rods to determine the manufacturer; and for affected parts, an inspection for any cracking of the rods, and related investigative and corrective actions if necessary. We are issuing this AD to detect and correct cracking of the rods, which could result in rupture of rods that attach the belly fairing to the airframe, leading to separation of the belly fairing from the airframe, and consequent damage to airplane structure and airplane systems.

DATES: This AD becomes effective March 8, 2013.

The Director of the Federal Register approved the incorporation by reference of certain publications listed in this AD as of March 8, 2013.

ADDRESSES: You may examine the AD docket on the Internet at *http://www.regulations.gov* or in person at the U.S. Department of Transportation, Docket Operations, M–30, West Building Ground Floor, Room W12–140, 1200 New Jersey Avenue SE., Washington, DC.

FOR FURTHER INFORMATION CONTACT: Vladimir Ulyanov, Aerospace Engineer, International Branch, ANM–116, Transport Airplane Directorate, FAA, 1601 Lind Avenue SW., Renton, WA 98057–3356; telephone (425) 227–1138; fax (425) 227–1149.

SUPPLEMENTARY INFORMATION:

Discussion

We issued a notice of proposed rulemaking (NPRM) to amend 14 CFR part 39 to include an AD that would apply to the specified products. That NPRM was published in the **Federal Register** on October 16, 2012 (77 FR 63264). That NPRM proposed to correct an unsafe condition for the specified products. The Mandatory Continuing Airworthiness Information (MCAI) states:

> A rod manufacturing process defect has been identified at the supplier, Technical Airborne Components Industries (TAC), which could lead to cracks at the crimped end of the rod.
>
> A design review of all affected rods has demonstrated that rupture of rods which attach the belly fairing can lead to separation of the belly fairing from the airframe, which would constitute an unsafe condition.
>
> For the reasons described above, this [European Aviation Safety Agency (EASA)] AD requires detailed visual inspections of the 21 affected rods installed in the belly fairing for manufacturer identification, and if TAC is identified as manufacturer, or if the manufacturer cannot be identified, to further inspect the rods to find any crack, using a high frequency eddy current (HFEC) method and, depending on findings, accomplishment of the applicable [related investigative and] corrective actions, to ensure structural integrity of the belly fairing rods. This [EASA] AD also prohibits installation of an affected TAC rod as replacement part in the belly fairing to all aeroplanes.

A design review of all affected rods has demonstrated that rupture of rods that attach the belly fairing can lead to separation of the belly fairing from the airframe, which can cause damage to airplane structure and airplane systems. The related investigative actions include an inspection to determine the manufacturer and an HFEC inspection of any affected replacement rod for any cracking. The corrective actions include replacing the cracked rod with a new rod. You may obtain further information by examining the MCAI in the AD docket.

Comments

We gave the public the opportunity to participate in developing this AD. We received no comments on the NPRM (77 FR 63264, October 16, 2012) or on the determination of the cost to the public.

Conclusion

We reviewed the available data and determined that air safety and the public interest require adopting the AD as proposed except for minor editorial changes. We have determined that these minor changes:

- Are consistent with the intent that was proposed in the NPRM (77 FR 63264, October 16, 2012) for correcting the unsafe condition; and
- Do not add any additional burden upon the public than was already proposed in the NPRM/(77 FR 63264, October 16, 2012).

Costs of Compliance

We estimate that this AD will affect 54 products of U.S. registry. We also estimate that it will take about 13 work-hours per product to comply with the basic requirements of this AD. The average labor rate is $85 per work-hour. Based on these figures, we estimate the cost of this AD to the U.S. operators to be $59,670, or $1,105 per product.

In addition, we estimate that any necessary follow-on actions would take about 28 work-hours and require parts costing $0, for a cost of $2,380 per product. Where the service information lists required parts costs that are covered under warranty, we have assumed that there will be no charge for these parts. As we do not control warranty coverage for affected parties, some parties may incur costs higher than estimated here. We have no way of determining the number of products that may need these actions.

Authority for This Rulemaking

Title 49 of the United States Code specifies the FAA's authority to issue rules on aviation safety. Subtitle I, section 106, describes the authority of the FAA Administrator. ''Subtitle VII: Aviation Programs,'' describes in more detail the scope of the Agency's authority.

We are issuing this rulemaking under the authority described in ''Subtitle VII,

Part A, Subpart III, Section 44701: General requirements.'' Under that section, Congress charges the FAA with promoting safe flight of civil aircraft in air commerce by prescribing regulations for practices, methods, and procedures the Administrator finds necessary for safety in air commerce. This regulation is within the scope of that authority because it addresses an unsafe condition that is likely to exist or develop on products identified in this rulemaking action.

Regulatory Findings

We determined that this AD will not have federalism implications under Executive Order 13132. This AD will not have a substantial direct effect on the States, on the relationship between the national government and the States, or on the distribution of power and responsibilities among the various levels of government.

For the reasons discussed above, I certify that this AD:

1. Is not a ''significant regulatory action'' under Executive Order 12866;

2. Is not a ''significant rule'' under the DOT Regulatory Policies and Procedures (44 FR 11034, February 26, 1979);

3. Will not affect intrastate aviation in Alaska; and

4. Will not have a significant economic impact, positive or negative, on a substantial number of small entities under the criteria of the Regulatory Flexibility Act.

We prepared a regulatory evaluation of the estimated costs to comply with this AD and placed it in the AD docket.

Examining the AD Docket

You may examine the AD docket on the Internet at *http://www.regulations.gov;* or in person at the Docket Operations office between 9 a.m. and 5 p.m., Monday through Friday, except Federal holidays. The AD docket contains the NPRM (77 FR 63264, October 16, 2012), the regulatory evaluation, any comments received, and other information. The street address for the Docket Operations office (telephone (800) 647–5527) is in the **ADDRESSES** section. Comments will be available in the AD docket shortly after receipt.

List of Subjects in 14 CFR Part 39

Air transportation, Aircraft, Aviation safety, Incorporation by reference, Safety.

Adoption of the Amendment

Accordingly, under the authority delegated to me by the Administrator, the FAA amends 14 CFR part 39 as follows:

PART 39—AIRWORTHINESS DIRECTIVES

■ 1. The authority citation for part 39 continues to read as follows:

Authority: 49 U.S.C. 106(g), 40113, 44701.

§ 39.13 [Amended]

■ 2. The FAA amends § 39.13 by adding the following new AD:

2013–02–10 Airbus: Amendment 39–17331. Docket No. FAA–2012–1074; Directorate Identifier 2012–NM–027–AD.

(a) Effective Date

This airworthiness directive (AD) becomes effective March 8, 2013.

(b) Affected ADs

None.

(c) Applicability

This AD applies to all airplanes identified in paragraphs (c)(1) and (c)(2) of this AD, certificated in any category.

(1) Airbus Model A330–201, –202, –203, –223, –223F, –243, –243F, –301, –302, –303, –321, –322, –323, –341, –342, and –343 airplanes.

(2) Airbus Model A340–211, –212, –213, –311, –312, and –313 airplanes.

(d) Subject

Air Transport Association (ATA) of America Code 53, Fuselage.

(e) Reason

This AD was prompted by a report of a manufacturing defect in certain rods installed in the belly fairing, which could lead to cracks at the crimped end of the rod. We are issuing this AD to detect and correct cracking of the rods, which could result in rupture of rods that attach the belly fairing to the airframe, leading to separation of the belly fairing from the airframe, and consequent damage to airplane structure and airplane systems.

(f) Compliance

You are responsible for having the actions required by this AD performed within the compliance times specified, unless the actions have already been done.

(g) Actions

For Model A330–201, –202, –203, –223, –223F, –243, –243F, –301, –302, –303, –321, –322, –323, –341, –342, and –343 airplanes, having manufacturer serial number (MSN) 0002 to 1113 inclusive, except MSN 0996, 1039, 1054, 1059, 1105, 1107, 1108 and 1112; and Model A340–211, –212, –213, –311, –312, and –313 airplanes: Within 72 months after the effective date of this AD, accomplish the actions in paragraphs (g)(1) and (g)(2) of this AD, in accordance with the Accomplishment Instructions of Airbus Mandatory Service Bulletin A330–53–3186, Revision 01, dated April 7, 2011 (for Model A330 airplanes); or A340–53–4185, Revision 01, dated April 7, 2011 (for Model A340 airplanes).

(1) Do a detailed inspection of the 21 rods of the belly fairing identified in Airbus Mandatory Service Bulletin A330–53–3186, Revision 01, dated April 7, 2011 (for Model A330 airplanes); or A340–53–4185, Revision 01, dated April 7, 2011 (for Model A340 airplanes); for rod manufacturer identification. A review of airplane maintenance records is acceptable in lieu of this inspection if the manufacturer of the rods can be conclusively determined from that review.

(2) If the rod manufacturer is found to be Technical Airborne Components Industries (TAC), or if the manufacturer cannot be identified, do a high frequency eddy current (HFEC) inspection for cracking of the crimped end of the rod body and, if any crack is found, before further flight, do all applicable related investigative and corrective actions.

(h) Parts Installation Limitations

As of the effective date of this AD, no person may install any affected TAC rod, as identified in Airbus Mandatory Service Bulletin A330–53–3186, Revision 01, dated April 7, 2011; or A340–53–4185, Revision 01, dated April 7, 2011; as applicable; on any airplane unless the rod has passed (found to have no cracking) the inspection as required by paragraph (g)(2) of this AD.

(i) Credit for Previous Actions

This paragraph provides credit for the inspections and corrective actions required by paragraph (g) of this AD, if those actions were performed before the effective date of this AD using Airbus Mandatory Service Bulletin A330–53–3186, dated January 17, 2011 (for Model A330 airplanes); or A340–53–4185, dated January 17, 2011 (for Model A340 airplanes); which are not incorporated by reference in this AD.

(j) Other FAA AD Provisions

The following provisions also apply to this AD:

(1) *Alternative Methods of Compliance (AMOCs):* The Manager, International Branch, ANM–116, Transport Airplane Directorate, FAA, has the authority to approve AMOCs for this AD, if requested using the procedures found in 14 CFR 39.19. In accordance with 14 CFR 39.19, send your request to your principal inspector or local Flight Standards District Office, as appropriate. If sending information directly to the International Branch, send it to ATTN: Vladimir Ulyanov, Aerospace Engineer, International Branch, ANM–116, Transport Airplane Directorate, FAA, 1601 Lind Avenue SW., Renton, WA 98057–3356; telephone (425) 227–1138; fax (425) 227–1149. Information may be emailed to: *9-ANM-116-AMOC-REQUESTS@faa.gov.* Before using any approved AMOC, notify your appropriate principal inspector, or lacking a principal inspector, the manager of the local flight standards district office/certificate holding district office. The AMOC approval letter must specifically reference this AD.

(2) *Airworthy Product:* For any requirement in this AD to obtain corrective actions from a manufacturer or other source, use these actions if they are FAA-approved. Corrective actions are considered FAA-approved if they are approved by the State of Design Authority

(or their delegated agent). You are required to assure the product is airworthy before it is returned to service.

(k) Related Information

(1) Refer to Mandatory Continuing Airworthiness Information (MCAI) European Aviation Safety Agency (EASA) Airworthiness Directive 2012–0005, dated January 10, 2012, and the Airbus service information identified in paragraphs (k)(1)(i) and (k)(1)(ii) of this AD, for related information.

(i) Airbus Mandatory Service Bulletin A330–53–3186, Revision 01, dated April 7, 2011.

(ii) Airbus Mandatory Service Bulletin A340–53–4185, Revision 01, dated April 7, 2011.

(2) For service information identified in this AD, contact Airbus SAS—Airworthiness Office—EAL, 1 Rond Point Maurice Bellonte, 31707 Blagnac Cedex, France; telephone +33 5 61 93 36 96; fax +33 5 61 93 45 80; email *airworthiness.A330-A340@airbus.com;* Internet *http://www.airbus.com.* You may review copies of the referenced service information at the FAA, Transport Airplane Directorate, 1601 Lind Avenue SW., Renton, WA. For information on the availability of this material at the FAA, call 425–227–1221.

(l) Material Incorporated by Reference

(1) The Director of the Federal Register approved the incorporation by reference (IBR) of the service information listed in this paragraph under 5 U.S.C. 552(a) and 1 CFR part 51.

(2) You must use this service information as applicable to do the actions required by this AD, unless the AD specifies otherwise.

(i) Airbus Mandatory Service Bulletin A330–53–3186, Revision 01, dated April 7, 2011.

(ii) Airbus Mandatory Service Bulletin A340–53–4185, Revision 01, dated April 7, 2011

(3) For service information identified in this AD, contact Airbus SAS—Airworthiness Office—EAL, 1 Rond Point Maurice Bellonte, 31707 Blagnac Cedex, France; telephone +33 5 61 93 36 96; fax +33 5 61 93 45 80; email *airworthiness.A330-A340@airbus.com;* Internet *http://www.airbus.com.*

(4) You may review copies of the service information at the FAA, Transport Airplane Directorate, 1601 Lind Avenue SW., Renton, WA. For information on the availability of this material at the FAA, call 425–227–1221.

(5) You may view this service information that is incorporated by reference at the National Archives and Records Administration (NARA). For information on the availability of this material at NARA, call 202–741–6030, or go to: *http://www.archives.gov/federal-register/cfr/ibr-locations.html.*

Issued in Renton, Washington, on January 16, 2013.

Michael Kaszycki,

Acting Manager, Transport Airplane Directorate, Aircraft Certification Service.

[FR Doc. 2013–01822 Filed 1–31–13; 8:45 am]

BILLING CODE 4910–13–P

DEPARTMENT OF TRANSPORTATION

Federal Aviation Administration

14 CFR Part 39

[Docket No. FAA–2012–1040; Directorate Identifier 2012–NM–029–AD; Amendment 39–17330; AD 2013–02–09]

RIN 2120–AA64

Airworthiness Directives; BAE SYSTEMS (OPERATIONS) LIMITED Airplanes

AGENCY: Federal Aviation Administration (FAA), Department of Transportation (DOT).

ACTION: Final rule.

SUMMARY: We are adopting a new airworthiness directive (AD) for all BAE SYSTEMS (OPERATIONS) LIMITED Model BAe 146, and Avro 146–RJ series airplanes. This AD was prompted by a report of loss of the end caps on the anti-icing piccolo tube of the wing leading edge. This AD requires a detailed inspection of the end caps on the anti-icing piccolo tube for lost or loose end caps, and replacing or repairing the end caps if necessary. We are issuing this AD to detect and correct lost and loose end caps on the anti-icing piccolo tube, and ice accretion on the wing leading edge or run-back ice, which could lead to a reduction in the stall margin on approach and loss of controllability of the airplane.

DATES: This AD becomes effective March 8, 2013.

The Director of the Federal Register approved the incorporation by reference of a certain publication listed in this AD as of March 8, 2013.

ADDRESSES: You may examine the AD docket on the Internet at *http://www.regulations.gov* or in person at the U.S. Department of Transportation, Docket Operations, M–30, West Building Ground Floor, Room W12–140, 1200 New Jersey Avenue SE., Washington, DC.

FOR FURTHER INFORMATION CONTACT: Todd Thompson, Aerospace Engineer, International Branch, ANM–116, Transport Airplane Directorate, FAA, 1601 Lind Avenue SW., Renton, WA 98057–3356; telephone (425) 227–1175; fax (425) 227–1149.

SUPPLEMENTARY INFORMATION:

Discussion

We issued a notice of proposed rulemaking (NPRM) to amend 14 CFR part 39 to include an AD that would apply to the specified products. That NPRM was published in the **Federal Register** on October 4, 2012 (77 FR 60651). That NPRM proposed to correct an unsafe condition for the specified products. The Mandatory Continuing Airworthiness Information (MCAI) states:

> An operator reported the loss of the wing leading edge anti-icing piccolo tube end caps on two aircraft. This was discovered during routine zonal inspections when the wing tips were removed. The loss of the end cap would result in a reduction in anti-icing efficiency, over the outboard portion of the leading edge of that wing, affecting approximately 25% of the wingspan towards the wing tip.
>
> The System Safety Analysis (SSA) classifies the loss of anti-icing of both of the outer wings as hazardous if the loss is not indicated to the crew. The loss of a piccolo tube end cap would not be indicated to the flight crew and, therefore, this reduction in anti-icing capability on one wing must also be classified as hazardous.
>
> This condition, if not detected and corrected, could result in ice accretion on the wing leading edge, or run-back ice and could lead to a reduction in the stall margin on approach together with a reduction in roll control authority.
>
> For the reasons described above, this [European Aviation Safety Agency (EASA)] AD [2012–0003, dated January 6, 2012] requires a one-off [detailed] inspection [for lost and loose end caps] of the piccolo tube end caps. The results of this inspection will be used to establish a suitable repeat inspection period, which will be introduced through the Maintenance Review Board (MRB) process.

The corrective action is replacing or repairing the end caps if necessary. You may obtain further information by examining the MCAI in the AD docket.

Clarification of "No Reporting Requirement" Paragraph

Paragraph (i) of the NPRM (77 FR 60651, October 4, 2012) refers to EASA AD 2012–0003, dated January 6, 2012. However, we have revised paragraph (i) of this AD to refer to BAE SYSTEMS (OPERATIONS) LIMITED Inspection Service Bulletin ISB.30–025, dated April 19, 2011, because that service bulletin is the appropriate source of service information for doing the actions required by this AD.

Comments

We gave the public the opportunity to participate in developing this AD. We received no comments on the NPRM (77 FR 60651, October 4, 2012) or on the determination of the cost to the public.

Conclusion

We reviewed the available data and determined that air safety and the public interest require adopting the AD as proposed—except for minor editorial changes and clarification of paragraph (i) of this AD. We have determined that these minor changes:

• Are consistent with the intent that was proposed in the NPRM (77 FR 60651, October 4, 2012) for correcting the unsafe condition; and

• Do not add any additional burden upon the public than was already proposed in the NPRM (77 FR 60651, October 4, 2012).

Costs of Compliance

We estimate that this AD will affect 2 products of U.S. registry. We also estimate that it will take about 2 work-hours per product to comply with the basic requirements of this AD. The average labor rate is $85 per work-hour. Based on these figures, we estimate the cost of this AD to the U.S. operators to be $340, or $170 per product.

Authority for This Rulemaking

Title 49 of the United States Code specifies the FAA's authority to issue rules on aviation safety. Subtitle I, section 106, describes the authority of the FAA Administrator. ''Subtitle VII: Aviation Programs,'' describes in more detail the scope of the Agency's authority.

We are issuing this rulemaking under the authority described in ''Subtitle VII, Part A, Subpart III, Section 44701: General requirements.'' Under that section, Congress charges the FAA with promoting safe flight of civil aircraft in air commerce by prescribing regulations for practices, methods, and procedures the Administrator finds necessary for safety in air commerce. This regulation is within the scope of that authority because it addresses an unsafe condition that is likely to exist or develop on products identified in this rulemaking action.

Regulatory Findings

We determined that this AD will not have federalism implications under Executive Order 13132. This AD will not have a substantial direct effect on the States, on the relationship between the national government and the States, or on the distribution of power and responsibilities among the various levels of government.

For the reasons discussed above, I certify that this AD:

1. Is not a ''significant regulatory action'' under Executive Order 12866;

2. Is not a ''significant rule'' under the DOT Regulatory Policies and Procedures (44 FR 11034, February 26, 1979);

3. Will not affect intrastate aviation in Alaska; and

4. Will not have a significant economic impact, positive or negative, on a substantial number of small entities under the criteria of the Regulatory Flexibility Act.

We prepared a regulatory evaluation of the estimated costs to comply with this AD and placed it in the AD docket.

Examining the AD Docket

You may examine the AD docket on the Internet at *http://www.regulations.gov;* or in person at the Docket Operations office between 9 a.m. and 5 p.m., Monday through Friday, except Federal holidays. The AD docket contains the NPRM (77 FR 60651, October 4, 2012), the regulatory evaluation, any comments received, and other information. The street address for the Docket Operations office (telephone (800) 647–5527) is in the **ADDRESSES** section. Comments will be available in the AD docket shortly after receipt.

List of Subjects in 14 CFR Part 39

Air transportation, Aircraft, Aviation safety, Incorporation by reference, Safety.

Adoption of the Amendment

Accordingly, under the authority delegated to me by the Administrator, the FAA amends 14 CFR part 39 as follows:

PART 39—AIRWORTHINESS DIRECTIVES

■ 1. The authority citation for part 39 continues to read as follows:

Authority: 49 U.S.C. 106(g), 40113, 44701.

§ 39.13 [Amended]

■ 2. The FAA amends § 39.13 by adding the following new AD:

2013–02–09 BAE SYSTEMS (OPERATIONS) LIMITED: Amendment 39–17330. Docket No. FAA–2012–1040; Directorate Identifier 2012–NM–029–AD.

(a) Effective Date

This airworthiness directive (AD) becomes effective March 8, 2013.

(b) Affected ADs

None.

(c) Applicability

This AD applies to all BAE SYSTEMS (OPERATIONS) LIMITED Model BAe 146–100A, –200A, and –300A airplanes; and Model Avro 146–RJ70A, 146–RJ85A, and 146–RJ100A airplanes; certificated in any category; all serial numbers.

(d) Subject

Air Transport Association (ATA) of America Code 30, Ice and rain protection.

(e) Reason

This AD was prompted by a report of loss of the end caps on the anti-icing piccolo tube of the wing leading edge. We are issuing this AD to detect and correct lost and loose end caps on the anti-icing piccolo tube, and ice accretion on the wing leading edge or run-back ice, which could lead to a reduction in the stall margin on approach and loss of controllability of the airplane.

(f) Compliance

You are responsible for having the actions required by this AD performed within the compliance times specified, unless the actions have already been done.

(g) Inspection

Within 12 months after the effective date of this AD: Do a detailed inspection of the end caps on the anti-icing piccolo tube for lost and loose end caps, in accordance the Accomplishment Instructions of BAE SYSTEMS (OPERATIONS) LIMITED Inspection Service Bulletin ISB.30–025, dated April 19, 2011.

(h) Corrective Action

If, during the detailed inspection required by paragraph (g) of this AD, a lost or loose end cap of the anti-icing piccolo tube is found: Before next flight, replace the end cap, in accordance the Accomplishment Instructions of BAE SYSTEMS (OPERATIONS) LIMITED Inspection Service Bulletin ISB.30–025, dated April 19, 2011, or repair in accordance with a method approved by the Manager, International Branch, ANM–116, Transport Airplane Directorate, FAA, or the European Aviation Safety Agency (EASA) (or its delegated agent).

(i) No Reporting Requirement

BAE SYSTEMS (OPERATIONS) LIMITED Inspection Service Bulletin ISB.30–025, dated April 19, 2011, specifies a reporting requirement; this AD does not require reporting.

(j) Other FAA AD Provisions

The following provisions also apply to this AD:

(1) *Alternative Methods of Compliance (AMOCs):* The Manager, International Branch, ANM–116, Transport Airplane Directorate, FAA, has the authority to approve AMOCs for this AD, if requested using the procedures found in 14 CFR 39.19. In accordance with 14 CFR 39.19, send your request to your principal inspector or local Flight Standards District Office, as appropriate. If sending information directly to the International Branch, send it to ATTN: Todd Thompson, Aerospace Engineer, International Branch, ANM–116, Transport Airplane Directorate, FAA, 1601 Lind Avenue SW., Renton, WA 98057–3356; telephone (425) 227–1175; fax (425) 227–1149. Information may be emailed to: *9-ANM-116-AMOC-REQUESTS@faa.gov.* Before using any approved AMOC, notify your appropriate principal inspector, or lacking a principal inspector, the manager of the local flight standards district office/certificate holding district office. The AMOC approval letter must specifically reference this AD.

(2) *Airworthy Product:* For any requirement in this AD to obtain corrective actions from a manufacturer or other source, use these actions if they are FAA-approved. Corrective actions are considered FAA-approved if they are approved by the State of Design Authority (or their delegated agent). You are required

to assure the product is airworthy before it is returned to service.

(k) Related Information

Refer to MCAI EASA Airworthiness Directive 2012–0003, dated January 6, 2012; and BAE SYSTEMS (OPERATIONS) LIMITED Inspection Service Bulletin ISB.30–025, dated April 19, 2011; for related information.

(l) Material Incorporated by Reference

(1) The Director of the Federal Register approved the incorporation by reference (IBR) of the service information listed in this paragraph under 5 U.S.C. 552(a) and 1 CFR part 51.

(2) You must use this service information as applicable to do the actions required by this AD, unless the AD specifies otherwise.

(i) BAE SYSTEMS (OPERATIONS) LIMITED Inspection Service Bulletin ISB.30–025, dated April 19, 2011.

(ii) Reserved.

(3) For service information identified in this AD, contact BAE SYSTEMS (OPERATIONS) LIMITED, Customer Information Department, Prestwick International Airport, Ayrshire, KA9 2RW, Scotland, United Kingdom; telephone +44 1292 675207; fax +44 1292 675704; email *RApublications@baesystems.com;* Internet *http://www.baesystems.com/Businesses/RegionalAircraft/index.htm.*

(4) You may review copies of the service information at the FAA, Transport Airplane Directorate, 1601 Lind Avenue SW., Renton, WA. For information on the availability of this material at the FAA, call 425–227–1221.

(5) You may view this service information that is incorporated by reference at the National Archives and Records Administration (NARA). For information on the availability of this material at NARA, call 202–741–6030, or go to: *http://www.archives.gov/federal-register/cfr/ibr-locations.html.*

Issued in Renton, Washington, on January 16, 2013.

Michael Kaszycki,

Acting Manager, Transport Airplane Directorate, Aircraft Certification Service.

[FR Doc. 2013–01819 Filed 1–31–13; 8:45 am]

BILLING CODE 4910–13–P

DEPARTMENT OF TRANSPORTATION

Federal Aviation Administration

14 CFR Part 39

[Docket No. FAA–2012–1071; Directorate Identifier 2012–NM–070–AD; Amendment 39–17332; AD 2013–02–11]

RIN 2120–AA64

Airworthiness Directives; Airbus Airplanes

AGENCY: Federal Aviation Administration (FAA), Department of Transportation (DOT).

ACTION: Final rule.

SUMMARY: We are adopting a new airworthiness directive (AD) for all Airbus Model A310–203 airplanes. This AD was prompted by a report of an analysis that demonstrated a reduced fatigue life for the side link bolts, center sway link bolts, and thrust link bolts on the forward engine mounts. This AD requires repetitive replacement of those bolts. We are issuing this AD to prevent deterioration of the structural integrity of the bolts, which could result in possible damage to an engine or wing.

DATES: This AD becomes effective March 8, 2013.

The Director of the Federal Register approved the incorporation by reference of a certain publication listed in this AD as of March 8, 2013.

ADDRESSES: You may examine the AD docket on the Internet at *http://www.regulations.gov* or in person at the U.S. Department of Transportation, Docket Operations, M–30, West Building Ground Floor, Room W12–140, 1200 New Jersey Avenue SE., Washington, DC.

FOR FURTHER INFORMATION CONTACT: Dan Rodina, Aerospace Engineer, International Branch, ANM–116, Transport Airplane Directorate, FAA, 1601 Lind Avenue SW., Renton, WA 98057–3356; telephone (425) 227–2125; fax (425) 227–1147.

SUPPLEMENTARY INFORMATION:

Discussion

We issued a notice of proposed rulemaking (NPRM) to amend 14 CFR part 39 to include an AD that would apply to the specified products. That NPRM was published in the **Federal Register** on October 16, 2012 (77 FR 63268). That NPRM proposed to correct an unsafe condition for the specified products. The Mandatory Continuing Airworthiness Information (MCAI) states:

> Post type-certification analyses performed in the frame of the Extended Service Goal (ESG) exercise, demonstrated a reduced fatigue life for the side link bolts, centre sway link bolts and thrust link bolts of the General Electric (GE) CF6–80A3 forward engine mounts.
>
> This condition, if left uncorrected, could result in a deterioration of the structural integrity of the front engine mount bolts [and possible damage to an engine or wing].
>
> For the reasons described above, this [European Aviation Safety Agency (EASA)] AD requires [repetitive] replacement of all side link bolts, centre sway link bolts and all thrust link bolts of GE CF6–80A3 powered aeroplanes.

You may obtain further information by examining the MCAI in the AD docket.

Comments

We gave the public the opportunity to participate in developing this AD. We received no comments on the NPRM (77 FR 63268, October 16, 2012) or on the determination of the cost to the public.

Conclusion

We reviewed the available data and determined that air safety and the public interest require adopting the AD as proposed.

Costs of Compliance

We estimate that this AD will affect 30 products of U.S. registry. We also estimate that it will take about 139 work-hours per product to comply with the basic requirements of this AD. The average labor rate is $85 per work-hour. Required parts will cost about $4,810 per product. Where the service information lists required parts costs that are covered under warranty, we have assumed that there will be no charge for these parts. As we do not control warranty coverage for affected parties, some parties may incur costs higher than estimated here. Based on these figures, we estimate the cost of this AD to the U.S. operators to be $498,750, or $16,625 per product.

Authority for This Rulemaking

Title 49 of the United States Code specifies the FAA's authority to issue rules on aviation safety. Subtitle I, section 106, describes the authority of the FAA Administrator. ''Subtitle VII: Aviation Programs,'' describes in more detail the scope of the Agency's authority.

We are issuing this rulemaking under the authority described in ''Subtitle VII, Part A, Subpart III, Section 44701: General requirements.'' Under that section, Congress charges the FAA with promoting safe flight of civil aircraft in air commerce by prescribing regulations for practices, methods, and procedures the Administrator finds necessary for safety in air commerce. This regulation is within the scope of that authority because it addresses an unsafe condition that is likely to exist or develop on products identified in this rulemaking action.

Regulatory Findings

We determined that this AD will not have federalism implications under Executive Order 13132. This AD will not have a substantial direct effect on the States, on the relationship between the national government and the States, or on the distribution of power and responsibilities among the various levels of government.

For the reasons discussed above, I certify that this AD:

1. Is not a ''significant regulatory action'' under Executive Order 12866;

2. Is not a ''significant rule'' under the DOT Regulatory Policies and Procedures (44 FR 11034, February 26, 1979);

3. Will not affect intrastate aviation in Alaska; and

4. Will not have a significant economic impact, positive or negative, on a substantial number of small entities under the criteria of the Regulatory Flexibility Act.

We prepared a regulatory evaluation of the estimated costs to comply with this AD and placed it in the AD docket.

Examining the AD Docket

You may examine the AD docket on the Internet at *http://www.regulations.gov;* or in person at the Docket Operations office between 9 a.m. and 5 p.m., Monday through Friday, except Federal holidays. The AD docket contains the NPRM (77 FR 63268, October 16, 2012), the regulatory evaluation, any comments received, and other information. The street address for the Docket Operations office (telephone (800) 647–5527) is in the **ADDRESSES** section. Comments will be available in the AD docket shortly after receipt.

List of Subjects in 14 CFR Part 39

Air transportation, Aircraft, Aviation safety, Incorporation by reference, Safety.

Adoption of the Amendment

Accordingly, under the authority delegated to me by the Administrator, the FAA amends 14 CFR part 39 as follows:

PART 39—AIRWORTHINESS DIRECTIVES

■ 1. The authority citation for part 39 continues to read as follows:

Authority: 49 U.S.C. 106(g), 40113, 44701.

§ 39.13 [Amended]

■ 2. The FAA amends § 39.13 by adding the following new AD:

2013–02–11 Airbus: Amendment 39–17332. Docket No. FAA–2012–1071; Directorate Identifier 2012–NM–070–AD.

(a) Effective Date

This airworthiness directive (AD) becomes effective March 8, 2013.

(b) Affected ADs

None.

(c) Applicability

This AD applies to all Airbus Model A310–203 airplanes, certificated in any category.

(d) Subject

Air Transport Association (ATA) of America Code 71, Powerplant.

(e) Reason

This AD was prompted by a report of an analysis that demonstrated a reduced fatigue life for the side link bolts, center sway link bolts, and thrust link bolts on the forward engine mounts. We are issuing this AD to prevent deterioration of the structural integrity of the bolts, which could result in possible damage to an engine or wing.

(f) Compliance

You are responsible for having the actions required by this AD performed within the compliance times specified, unless the actions have already been done.

(g) Actions

Within 18 months after the effective date of this AD, replace all side link bolts on left hand (LH) and right hand (RH) side of the engines, and all center sway link bolts and thrust link bolts of both engines, having any part number (P/N) identified in paragraphs (g)(1) through (g)(6) of this AD, with new bolts having the same part number, in accordance with the Accomplishment Instructions of Airbus Mandatory Service Bulletin A310–71–2037, including Appendices 01 and 02, dated September 30, 2011. Repeat the bolt replacements thereafter at intervals not exceeding 134 months.

(1) P/N 9021M88P01.
(2) P/N 9021M88P02.
(3) P/N 9205M81P01.
(4) P/N 9021M88P03.
(5) P/N 9021M88P04.
(6) P/N 9205M82P01.

(h) Other FAA AD Provisions

The following provisions also apply to this AD:

(1) *Alternative Methods of Compliance (AMOCs):* The Manager, International Branch, ANM–116, Transport Airplane Directorate, FAA, has the authority to approve AMOCs for this AD, if requested using the procedures found in 14 CFR 39.19. In accordance with 14 CFR 39.19, send your request to your principal inspector or local Flight Standards District Office, as appropriate. If sending information directly to the International Branch, send it to ATTN: Dan Rodina, Aerospace Engineer, International Branch, ANM–116, Transport Airplane Directorate, FAA, 1601 Lind Avenue SW., Renton, WA 98057–3356; telephone (425) 227–2125; fax (425) 227–1147. Information may be emailed to: *9-ANM-116-AMOC-REQUESTS@faa.gov.* Before using any approved AMOC, notify your appropriate principal inspector, or lacking a principal inspector, the manager of the local flight standards district office/certificate holding district office. The AMOC approval letter must specifically reference this AD.

(2) *Airworthy Product:* For any requirement in this AD to obtain corrective actions from a manufacturer or other source, use these actions if they are FAA-approved. Corrective actions are considered FAA-approved if they are approved by the State of Design Authority (or their delegated agent). You are required to assure the product is airworthy before it is returned to service.

(i) Related Information

Refer to MCAI European Aviation Safety Agency Airworthiness Directive 2012–0056, dated April 3, 2012; and Airbus Mandatory Service Bulletin A310–71–2037, including Appendices 01 and 02, dated September 30, 2011; for related information.

(j) Material Incorporated by Reference

(1) The Director of the Federal Register approved the incorporation by reference (IBR) of the service information listed in this paragraph under 5 U.S.C. 552(a) and 1 CFR part 51.

(2) You must use this service information as applicable to do the actions required by this AD, unless the AD specifies otherwise.

(i) Airbus Mandatory Service Bulletin A310–71–2037, including Appendices 01 and 02, dated September 30, 2011.

(ii) Reserved.

(3) For service information identified in this AD, contact Airbus SAS—EAW (Airworthiness Office), 1 Rond Point Maurice Bellonte, 31707 Blagnac Cedex, France; telephone +33 5 61 93 36 96; fax +33 5 61 93 44 51; email *account.airworth-eas@airbus.com;* Internet *http://www.airbus.com.*

(4) You may review copies of the service information at the FAA, Transport Airplane Directorate, 1601 Lind Avenue SW., Renton, WA. For information on the availability of this material at the FAA, call 425–227–1221.

(5) You may view this service information that is incorporated by reference at the National Archives and Records Administration (NARA). For information on the availability of this material at NARA, call 202–741–6030, or go to: *http://www.archives.gov/federal-register/cfr/ibr-locations.html.*

Issued in Renton, Washington, on January 17, 2013.

Michael Kaszycki,

Acting Manager, Transport Airplane Directorate, Aircraft Certification Service.

[FR Doc. 2013–01820 Filed 1–31–13; 8:45 am]

BILLING CODE 4910–13–P

DEPARTMENT OF TRANSPORTATION

Federal Aviation Administration

14 CFR Part 39

[Docket No. FAA–2012–1102; Directorate Identifier 2012–NM–062–AD; Amendment 39–17333; AD 2013–02–12]

RIN 2120–AA64

Airworthiness Directives; EADS CASA (Type Certificate Previously Held by Construcciones Aeronáuticas, S.A.) Airplanes

AGENCY: Federal Aviation Administration (FAA), Department of Transportation (DOT).

ACTION: Final rule.

SUMMARY: We are adopting a new airworthiness directive (AD) for all EADS CASA (Type Certificate previously held by Construcciones Aeronáuticas, S.A.) Model CN–235, CN–235–100, CN–235–200, and CN–235–300 airplanes. This AD was prompted by reports of incorrect electrical polarity connections on engine fire extinguishing discharge cartridges. This AD requires a one-time inspection to identify the correct polarity for each pair of electrical connectors on each engine fire extinguisher cartridge, and repair if necessary. We are issuing this AD to detect and correct incorrect polarity connections, which could prevent the actuation of the discharge cartridge in case of automatic fire detection or manual initiation during a potential engine fire, and could result in damage to the airplane and injury to passengers.

DATES: This AD becomes effective March 8, 2013.

The Director of the Federal Register approved the incorporation by reference of a certain publication listed in this AD as of March 8, 2013.

ADDRESSES: You may examine the AD docket on the Internet at *http://www.regulations.gov* or in person at the U.S. Department of Transportation, Docket Operations, M–30, West Building Ground Floor, Room W12–140, 1200 New Jersey Avenue SE., Washington, DC.

FOR FURTHER INFORMATION CONTACT: Shahram Daneshmandi, Aerospace Engineer, International Branch, ANM–116, Transport Airplane Directorate, FAA, 1601 Lind Avenue SW., Renton, WA 98057–3356; telephone (425) 227–1112; fax (425) 227–1149.

SUPPLEMENTARY INFORMATION:

Discussion

We issued a notice of proposed rulemaking (NPRM) to amend 14 CFR part 39 to include an AD that would apply to the specified products. That NPRM was published in the **Federal Register** on October 18, 2012 (77 FR 64053). That NPRM proposed to correct an unsafe condition for the specified products. The Mandatory Continuing Airworthiness Information (MCAI) states:

> Reports have been received of finding wrong electrical polarity connections of engine fire extinguishing discharge cartridges on CASA CN–235 aeroplanes. The results of the subsequent investigation showed that the incorrect discharge cartridge assembly was caused by production line errors.
>
> This condition, if not detected and corrected, could prevent the actuation of the discharge cartridge in case of automatic fire detection or manual initiation in case of engine fire, possibly resulting in damage to the aeroplane and injury to occupants.
>
> To address this potential unsafe condition, EADS CASA (Airbus Military) developed instructions to identify erroneous wiring polarity installation.
>
> For the reasons described above this [European Aviation Safety Agency] AD requires a one-time inspection to verify proper electrical polarity of wiring of each engine fire extinguisher discharge cartridge and, depending on findings, corrective action [accomplish the repair].

You may obtain further information by examining the MCAI in the AD docket.

Comments

We gave the public the opportunity to participate in developing this AD. We received no comments on the NPRM (77 FR 64053, October 18, 2012) or on the determination of the cost to the public.

Conclusion

We reviewed the available data and determined that air safety and the public interest require adopting the AD as proposed.

Costs of Compliance

We estimate that this AD will affect 6 products of U.S. registry. We also estimate that it will take about 4 work-hours per product to comply with the basic requirements of this AD. The average labor rate is $85 per work-hour. Based on these figures, we estimate the cost of this AD to the U.S. operators to be $2,040, or $340 per product.

We have received no definitive data that would enable us to provide cost estimates for the on-condition actions specified in this AD.

Authority for This Rulemaking

Title 49 of the United States Code specifies the FAA's authority to issue rules on aviation safety. Subtitle I, section 106, describes the authority of the FAA Administrator. ''Subtitle VII: Aviation Programs,'' describes in more detail the scope of the Agency's authority.

We are issuing this rulemaking under the authority described in ''Subtitle VII, Part A, Subpart III, Section 44701: General requirements.'' Under that section, Congress charges the FAA with promoting safe flight of civil aircraft in air commerce by prescribing regulations for practices, methods, and procedures the Administrator finds necessary for safety in air commerce. This regulation is within the scope of that authority because it addresses an unsafe condition that is likely to exist or develop on products identified in this rulemaking action.

Regulatory Findings

We determined that this AD will not have federalism implications under Executive Order 13132. This AD will not have a substantial direct effect on the States, on the relationship between the national government and the States, or on the distribution of power and responsibilities among the various levels of government.

For the reasons discussed above, I certify that this AD:

1. Is not a ''significant regulatory action'' under Executive Order 12866;
2. Is not a ''significant rule'' under the DOT Regulatory Policies and Procedures (44 FR 11034, February 26, 1979);
3. Will not affect intrastate aviation in Alaska; and
4. Will not have a significant economic impact, positive or negative, on a substantial number of small entities under the criteria of the Regulatory Flexibility Act.

We prepared a regulatory evaluation of the estimated costs to comply with this AD and placed it in the AD docket.

Examining the AD Docket

You may examine the AD docket on the Internet at *http://www.regulations.gov;* or in person at the Docket Operations office between 9 a.m. and 5 p.m., Monday through Friday, except Federal holidays. The AD docket contains the NPRM (77 FR 64053, October 18, 2012), the regulatory evaluation, any comments received, and other information. The street address for the Docket Operations office (telephone (800) 647–5527) is in the **ADDRESSES** section. Comments will be available in the AD docket shortly after receipt.

List of Subjects in 14 CFR Part 39

Air transportation, Aircraft, Aviation safety, Incorporation by reference, Safety.

Adoption of the Amendment

Accordingly, under the authority delegated to me by the Administrator, the FAA amends 14 CFR part 39 as follows:

PART 39—AIRWORTHINESS DIRECTIVES

■ 1. The authority citation for part 39 continues to read as follows:

Authority: 49 U.S.C. 106(g), 40113, 44701.

§ 39.13 [Amended]

■ 2. The FAA amends § 39.13 by adding the following new AD:

2013–02–12 EADS CASA (Type Certificate previously held by Construcciones Aeronáuticas, S.A.): Amendment 39–

17333. Docket No. FAA–2012–1102; Directorate Identifier 2012–NM–062–AD.

(a) Effective Date

This airworthiness directive (AD) becomes effective March 8, 2013.

(b) Affected ADs

None.

(c) Applicability

This AD applies to all EADS CASA (Type Certificate previously held by Construcciones Aeronáuticas, S.A.) Model CN–235, CN–235–100, CN–235–200, and CN–235–300 airplanes, certificated in any category, all serial numbers.

(d) Subject

Air Transport Association (ATA) of America Code 26, Fire protection.

(e) Reason

This AD was prompted by reports of incorrect electrical polarity connections on engine fire extinguishing discharge cartridges. We are issuing this AD to detect and correct incorrect polarity connections, which could prevent the actuation of the discharge cartridge in case of automatic fire detection or manual initiation during a potential engine fire, and could result in damage to the airplane and injury to passengers.

(f) Compliance

You are responsible for having the actions required by this AD performed within the compliance times specified, unless the actions have already been done.

(g) Inspection

Within 30 days after the effective date of this AD, do a one-time inspection to identify the correct polarity for each pair of electrical connectors on each engine fire extinguisher cartridge, in accordance with the Instructions of Airbus Military All Operator Letter 235–020, dated March 9, 2012.

(h) Corrective Action

If, during the inspection required by paragraph (g) of this AD, erroneous wiring polarity is detected: Before further flight, repair in accordance with a method approved by the Manager, International Branch, ANM–116, Transport Airplane Directorate, FAA; or European Aviation Safety Agency (EASA) (or its delegated agent).

(i) Other FAA AD Provisions

The following provisions also apply to this AD:

(1) *Alternative Methods of Compliance (AMOCs):* The Manager, International Branch, ANM–116, Transport Airplane Directorate, FAA, has the authority to approve AMOCs for this AD, if requested using the procedures found in 14 CFR 39.19. In accordance with 14 CFR 39.19, send your request to your principal inspector or local Flight Standards District Office, as appropriate. If sending information directly to the International Branch, send it to ATTN: Shahram Daneshmandi, Aerospace Engineer, International Branch, ANM–116, Transport Airplane Directorate, FAA, 1601 Lind Avenue SW., Renton, WA 98057–3356; telephone (425) 227–1112; fax (425) 227–1149. Information may be emailed to: *9-ANM-116-AMOC-REQUESTS@faa.gov.* Before using any approved AMOC, notify your appropriate principal inspector, or lacking a principal inspector, the manager of the local flight standards district office/certificate holding district office. The AMOC approval letter must specifically reference this AD.

(2) *Airworthy Product:* For any requirement in this AD to obtain corrective actions from a manufacturer or other source, use these actions if they are FAA-approved. Corrective actions are considered FAA-approved if they are approved by the State of Design Authority (or their delegated agent). You are required to assure the product is airworthy before it is returned to service.

(j) Related Information

Refer to MCAI EASA Airworthiness Directive 2012–0045, dated March 21, 2012, and Airbus Military All Operator Letter 235–020, dated March 9, 2012, for related information.

(k) Material Incorporated by Reference

(1) The Director of the Federal Register approved the incorporation by reference (IBR) of the service information listed in this paragraph under 5 U.S.C. 552(a) and 1 CFR part 51.

(2) You must use this service information as applicable to do the actions required by this AD, unless the AD specifies otherwise.

(i) Airbus Military All Operator Letter 235–020, dated March 9, 2012.

(ii) Reserved.

(3) For service information identified in this AD, contact EADS–CASA, Military Transport Aircraft Division (MTAD), Integrated Customer Services (ICS), Technical Services, Avenida de Aragón 404, 28022 Madrid, Spain; telephone +34 91 585 55 84; fax +34 91 585 55 05; email *MTA.TechnicalService@casa.eads.net;* Internet *http://www.eads.net.*

(4) You may review copies of the service information at the FAA, Transport Airplane Directorate, 1601 Lind Avenue SW., Renton, WA. For information on the availability of this material at the FAA, call 425–227–1221.

(5) You may view this service information that is incorporated by reference at the National Archives and Records Administration (NARA). For information on the availability of this material at NARA, call 202–741–6030, or go to: *http://www.archives.gov/federal-register/cfr/ibr-locations.html.*

Issued in Renton, Washington, on January 23, 2013.

Ali Bahrami,

Manager, Transport Airplane Directorate, Aircraft Certification Service.

[FR Doc. 2013–02074 Filed 1–31–13; 8:45 am]

BILLING CODE 4910–13–P

DEPARTMENT OF THE TREASURY

Internal Revenue Service

26 CFR Part 1

[TD 9611]

RIN 1545–BL49

Health Insurance Premium Tax Credit

AGENCY: Internal Revenue Service (IRS), Treasury.

ACTION: Final regulations.

SUMMARY: This document contains final regulations relating to the health insurance premium tax credit enacted by the Patient Protection and Affordable Care Act and the Health Care and Education Reconciliation Act of 2010. These final regulations provide guidance to individuals related to employees who may enroll in eligible employer-sponsored coverage and who wish to enroll in qualified health plans through Affordable Insurance Exchanges (Exchanges) and claim the premium tax credit.

DATES: *Effective date:* These regulations are effective on February 1, 2013.

Applicability date: For date of applicability, see § 1.36B–1(o).

FOR FURTHER INFORMATION CONTACT: Andrew S. Braden, (202) 622–4960 (not a toll-free number).

SUPPLEMENTARY INFORMATION:

Background

This document contains final regulations that amend the Income Tax Regulations (26 CFR part 1) under section 36B of the Internal Revenue Code (Code) regarding whether health coverage under an employer-sponsored plan is affordable for individuals who are eligible to enroll in the plan by reason of their relationship to an employee (related individuals).

On August 17, 2011, a notice of proposed rulemaking (REG–131491–10) was published in the **Federal Register** (76 FR 50931). On May 23, 2012, final regulations (TD 9590) were published in the **Federal Register** (77 FR 30377). The final regulations reserved a rule (§ 1.36B–2(c)(3)(v)(A)(*2*)) for determining affordability of employer-sponsored coverage for related individuals. Written comments responding to the proposed and final regulations were received. The comments are available for public inspection at *www.regulations.gov* or on request. A public hearing was held on November 17, 2011. After consideration of all the comments, the proposed rule is adopted without change by this Treasury decision.

Explanation of Provisions and Summary of Comments

The proposed regulations provided that, for taxable years beginning before January 1, 2015, an eligible employer-sponsored plan is affordable for related individuals if the portion of the annual premium the employee must pay for self-only coverage (the required contribution percentage) does not exceed 9.5% of the taxpayer's household income. While several comments supported this rule, other comments asserted that the affordability of coverage for related individuals should be based on the portion of the annual premium the employee must pay for family coverage.

These final regulations adopt the proposed rule without change. The language of section 36B, through a cross-reference to section 5000A(e)(1)(B), specifies that the affordability test for related individuals is based on the cost of self-only coverage. By contrast, section 5000A, which establishes the shared responsibility payment applicable to individuals for failure to maintain minimum essential coverage, addresses affordability for employees in section 5000A(e)(1)(B) and, separately, for related individuals in section 5000A(e)(1)(C). Thus, proposed regulations under section 5000A, which the Treasury Department is releasing concurrently with these final regulations, provide that, for purposes of applying the affordability exemption from the shared responsibility payment in the case of related individuals, the required contribution is based on the premium the employee would pay for employer-sponsored family coverage.

Effective/Applicability Date

These final regulations apply to taxable years ending after December 31, 2013.

Special Analyses

This Treasury decision is not a significant regulatory action as defined in Executive Order 12866, as supplemented by Executive Order 13563. Therefore, a regulatory assessment is not required. Section 553(b) of the Administrative Procedure Act (5 U.S.C. chapter 5) does not apply to these regulations, and, because the regulations do not impose a collection of information requirement on small entities, the Regulatory Flexibility Act (5 U.S.C. chapter 6) does not apply. Pursuant to section 7805(f) of the Code, the notice of proposed rulemaking that preceded these final regulations was submitted to the Chief Counsel for Advocacy of the Small Business Administration for comment on its impact on small business.

Drafting Information

The principal authors of these final regulations are Frank W. Dunham III and Stephen J. Toomey of the Office of Associate Chief Counsel (Income Tax and Accounting). However, other personnel from the IRS and the Treasury Department participated in their development.

List of Subjects in 26 CFR Part 1

Income taxes, Reporting and recordkeeping requirements.

Adoption of Amendments to the Regulations

Accordingly, 26 CFR part 1 is amended as follows:

PART 1—INCOME TAXES

■ **Paragraph 1.** The authority citation for part 1 continues to read in part as follows:

Authority: 26 U.S.C. 7805 * * *

■ Par. 2. Section 1.36B–2 is amended by revising paragraphs (c)(3)(v)(A)(*2*) and (c)(3)(v)(D), *Example 2,* to read as follows:

§ 1.36B–2 Eligibility for premium tax credit.

* * * * *

(c) * * *

(3) * * *

(v) * * *

(A) * * *

(*2*) *Affordability for related individual.* Except as provided in paragraph (c)(3)(v)(A)(*3*) of this section, an eligible employer-sponsored plan is affordable for a related individual if the portion of the annual premium the employee must pay for self-only coverage does not exceed the required contribution percentage, as described in paragraph (c)(3)(v)(A)(*1*) of this section.

* * * * *

(D) * * *

Example 2. Basic determination of affordability for a related individual. The facts are the same as in *Example 1,* except that C is married to J and X's plan requires C to contribute $5,300 for coverage for C and J for 2014 (11.3 percent of C's household income). Because C's required contribution for self-only coverage ($3,450) does not exceed 9.5 percent of household income, under paragraph (c)(3)(v)(A)(*2*) of this section, X's plan is affordable for C and J, and C and J are eligible for minimum essential coverage for all months in 2014.

* * * * *

Steven T. Miller,

Deputy Commissioner for Services and Enforcement.

Approved: January 25, 2013.

Mark J. Mazur,

Assistant Secretary of the Treasury (Tax Policy).

[FR Doc. 2013–02136 Filed 1–30–13; 11:15 am]

BILLING CODE 4830–01–P

DEPARTMENT OF HOMELAND SECURITY

Coast Guard

33 CFR Part 165

[Docket No. USCG–2012–0087]

Security Zone; Protection of Military Cargo, Captain of the Port Zone Puget Sound, WA

AGENCY: Coast Guard, DHS.

ACTION: Notice of enforcement of regulation.

SUMMARY: The Coast Guard will enforce the Sitcum Waterway Security Zone in Commencement Bay, Tacoma, Washington from 6 a.m. on February 1, 2013, through 11:59 p.m. on February 7, 2013, unless cancelled sooner by the Captain of the Port. This action is necessary for the security of Department of Defense assets and military cargo in the navigable waters of Puget Sound and adjacent waters. Entry into this zone is prohibited unless otherwise exempted or excluded under 33 CFR 165.1321 or unless authorized by the Captain of the Port or his Designated Representative.

DATES: The regulations in 33 CFR 165.1321 will be enforced for the security zone described in paragraph (c)(2) of that section from 6 a.m. on February 1, 2013, through 11:59 p.m. on February 7, 2013, unless cancelled sooner by the Captain of the Port.

FOR FURTHER INFORMATION CONTACT: If you have questions on this notice, call or email Ensign Nathaniel P. Clinger, Sector Puget Sound Waterways Management Division, Coast Guard; telephone 206–217–6045, email *SectorPugetSoundWWM@uscg.mil.*

SUPPLEMENTARY INFORMATION: The Coast Guard will activate and enforce the Sitcum Waterway Security Zone set forth in 33 CFR 165.1321(c)(2) from 6 a.m. on February 1, 2013, through 11:59 p.m. on February 7, 2013, unless cancelled sooner by the Captain of the Port or Designated Representative. In

2004, the Coast Guard established regulations for the security of Department of Defense assets and military cargo in the navigable waters of Puget Sound to and adjacent waters. (See 69 FR 52600, Aug. 27, 2004). When subject to enforcement, this regulation prohibits persons and vessels from the immediate vicinity of these facilities during military cargo loading and unloading operations. The security zone will also provide for the regulation of vessel traffic in the vicinity of military cargo loading facilities in the navigable waters of the United States. In addition, the regulation establishes requirements for all vessels to obtain permission of the COTP or Designated Representative, including the Vessel Traffic Service (VTS), to enter, move within, or exit these security zones when they are enforced. Entry into this zone is prohibited unless otherwise exempted or excluded under 33 CFR 165.1321 or unless authorized by the Captain of the Port or Designated Representative.

This notice is issued under authority of 33 CFR 165.1321 and 5 U.S.C. 552 (a). In addition to this notice in the **Federal Register**, the Coast Guard will provide the maritime community with notification of this enforcement period via marine information broadcasts and on-scene assets. If the COTP determines that the regulated area need not be enforced for the full duration stated in this notice, a Broadcast Notice to Mariners may be used to grant general permission to enter the regulated area.

Dated: January 23, 2013.

S.J. Ferguson,

Captain, U.S. Coast Guard, Captain of the Port, Puget Sound.

[FR Doc. 2013–02133 Filed 1–31–13; 8:45 am]

BILLING CODE 9110–04–P

ENVIRONMENTAL PROTECTION AGENCY

40 CFR Part 180

[EPA–HQ–OPP–2010–0234; FRL–9376–1]

Alpha-Cypermethrin; Pesticide Tolerances

AGENCY: Environmental Protection Agency (EPA).

ACTION: Final rule.

SUMMARY: This regulation establishes tolerances for residues of alpha-cypermethrin, in or on multiple commodities which are identified and discussed later in this document. BASF Corporation requested these tolerances under the Federal Food, Drug, and Cosmetic Act (FFDCA).

DATES: This regulation is effective February 1, 2013. Objections and requests for hearings must be received on or before April 2, 2013, and must be filed in accordance with the instructions provided in 40 CFR part 178 (see also Unit I.C. of the **SUPPLEMENTARY INFORMATION**).

ADDRESSES: The docket for this action, identified by docket identification (ID) number EPA–HQ–OPP–2010–0234, is available at *http://www.regulations.gov* or at the Office of Pesticide Programs Regulatory Public Docket (OPP Docket) in the Environmental Protection Agency Docket Center (EPA/DC), EPA West Bldg., Rm. 3334, 1301 Constitution Ave. NW., Washington, DC 20460–0001. The Public Reading Room is open from 8:30 a.m. to 4:30 p.m., Monday through Friday, excluding legal holidays. The telephone number for the Public Reading Room is (202) 566–1744, and the telephone number for the OPP Docket is (703) 305–5805. Please review the visitor instructions and additional information about the docket available at *http://www.epa.gov/dockets.*

FOR FURTHER INFORMATION CONTACT: BeWanda Alexander, Registration Division (7505P), Office of Pesticide Programs, Environmental Protection Agency, 1200 Pennsylvania Ave. NW., Washington, DC 20460–0001; telephone number: (703) 305–7460; email address: *alexander.bewanda@epa.gov.*

SUPPLEMENTARY INFORMATION:

I. General Information

A. Does this action apply to me?

You may be potentially affected by this action if you are an agricultural producer, food manufacturer, or pesticide manufacturer. The following list of North American Industrial Classification System (NAICS) codes is not intended to be exhaustive, but rather provides a guide to help readers determine whether this document applies to them. Potentially affected entities may include:

- Crop production (NAICS code 111).
- Animal production (NAICS code 112).
- Food manufacturing (NAICS code 311).
- Pesticide manufacturing (NAICS code 32532).

B. How can I get electronic access to other related information?

You may access a frequently updated electronic version of EPA's tolerance regulations at 40 CFR part 180 through the Government Printing Office's e-CFR site at *http://ecfr.gpoaccess.gov/cgi/t/text/text-idx?&c=ecfr&tpl=/ecfrbrowse/Title40/40tab_02.tpl.*

C. How can I file an objection or hearing request?

Under FFDCA section 408(g), 21 U.S.C. 346a, any person may file an objection to any aspect of this regulation and may also request a hearing on those objections. You must file your objection or request a hearing on this regulation in accordance with the instructions provided in 40 CFR part 178. To ensure proper receipt by EPA, you must identify docket ID number EPA–HQ–OPP–2010–0234 in the subject line on the first page of your submission. All objections and requests for a hearing must be in writing, and must be received by the Hearing Clerk on or before April 2, 2013. Addresses for mail and hand delivery of objections and hearing requests are provided in 40 CFR 178.25(b).

In addition to filing an objection or hearing request with the Hearing Clerk as described in 40 CFR part 178, please submit a copy of the filing (excluding any Confidential Business Information (CBI)) for inclusion in the public docket. Information not marked confidential pursuant to 40 CFR part 2 may be disclosed publicly by EPA without prior notice. Submit the non-CBI copy of your objection or hearing request, identified by docket ID number EPA–HQ–OPP–2010–0234, by one of the following methods:

- *Federal eRulemaking Portal: http://www.regulations.gov.* Follow the online instructions for submitting comments. Do not submit electronically any information you consider to be CBI or other information whose disclosure is restricted by statute.
- *Mail:* OPP Docket, Environmental Protection Agency Docket Center (EPA/DC), (28221T), 1200 Pennsylvania Ave. NW., Washington, DC 20460–0001.
- *Hand Delivery:* To make special arrangements for hand delivery or delivery of boxed information, please follow the instructions at *http://www.epa.gov/dockets/contacts.htm.*

Additional instructions on commenting or visiting the docket, along with more information about dockets generally, is available at *http://www.epa.gov/dockets.*

II. Summary of Petition-For Tolerance

In the **Federal Register** of May 19, 2010 (75 FR 28009) (FRL–8823–2), EPA issued a document pursuant to FFDCA section 408(d)(3), 21 U.S.C. 346a(d)(3), announcing the filing of a pesticide petition (PP 0F7690) by BASF Corporation, 26 Davis Drive, P.O. Box 13528, Research Triangle Park, NC 27709–3528. The petition requested that 40 CFR 180.418 be amended by

establishing tolerances for residues of the insecticide alpha-cypermethrin in or on tree nuts, Group 14; dried shelled pea and bean, except soybean, subgroup 6C; corn, grain; pop corn; sweet corn; soybeans; and sugar beet, roots at 0.05 parts per million (ppm); succulent shelled pea and bean, subgroup 6B; and root and tuber vegetables, Group 1 at 0.1 ppm; cucurbit vegetables, Group 9; fruiting vegetables, Group 8; sugar beet, tops; and wheat, grain at 0.2 ppm; citrus fruit, Group 10 at 0.35 ppm; cottonseed; edible podded legume vegetable, subgroup 6A; and sorghum, grain at 0.5 ppm; and rice, grain at 1.5 ppm; citrus, dried pulp at 1.8 ppm; head and stem *Brassica,* subgroup 5A at 2.0 ppm; citrus, oil at 4.0 ppm; leafy vegetable, except *Brassica,* Group 4 at 10 ppm; and alfalfa, hay at 15 ppm. There were no comments received in response to the notice of filing.

Based upon review of the data supporting the petition, EPA has established tolerances for alpha-cypermethrin ((*R*)-cyano(3-phenoxyphenyl)methyl (1*S*,3*S*)-rel-3-(2,2-dichloroethenyl)-2,2-dimethylcyclopropane carboxylate) as explained in Unit IV.D.

III. Aggregate Risk Assessment and Determination of Safety

Section 408(b)(2)(A)(i) of FFDCA allows EPA to establish a tolerance (the legal limit for a pesticide chemical residue in or on a food) only if EPA determines that the tolerance is ''safe.'' Section 408(b)(2)(A)(ii) of FFDCA defines ''safe'' to mean that ''there is a reasonable certainty that no harm will result from aggregate exposure to the pesticide chemical residue, including all anticipated dietary exposures and all other exposures for which there is reliable information.'' This includes exposure through drinking water and in residential settings, but does not include occupational exposure. Section 408(b)(2)(C) of FFDCA requires EPA to give special consideration to exposure of infants and children to the pesticide chemical residue in establishing a tolerance and to ''ensure that there is a reasonable certainty that no harm will result to infants and children from aggregate exposure to the pesticide chemical residue. * * *''

Consistent with FFDCA section 408(b)(2)(D), and the factors specified in FFDCA section 408(b)(2)(D), EPA has reviewed the available scientific data and other relevant information in support of this action. EPA has sufficient data to assess the hazards of and to make a determination on aggregate exposure for alpha-cypermethrin including exposure resulting from the tolerances established by this action. EPA's assessment of exposures and risks associated with alpha-cypermethrin follows.

A. Toxicological Profile

EPA has evaluated the available toxicity data and considered its validity, completeness, and reliability as well as the relationship of the results of the studies to human risk. EPA has also considered available information concerning the variability of the sensitivities of major identifiable subgroups of consumers, including infants and children.

Alpha-cypermethrin, cypermethrin, and zeta-cypermethrin are all pyrethroid insecticides and are isomer mixtures of the same chemical. The cypermethrins have been evaluated for a variety of toxic effects in experimental toxicity studies. Behavioral changes commonly seen with type II pyrethroids were consistently noted in the toxicology database for the cypermethrins. These behavioral changes included tremors, gait abnormalities, limb conditions, ataxia and hypersensitivity. Additionally, body weight changes were routinely observed and mortality was seen in a few studies in rats and dogs. Clinical signs were also noted in all acute neurotoxicity studies. Decreased activity, gait abnormalities, tremors, limb conditions, and hypersensitivity were observed at the mid and high doses. Additionally, slight nerve degeneration was seen in the acute neurotoxicity study with alpha-cypermethrin at the high dose. In the subchronic neurotoxicity studies with cypermethrin and zeta-cypermethrin, similar behavioral effects were seen along with decreased food consumption, body weight, and body weight gain.

Acute toxicology studies conducted with cypermethrins indicate moderate acute toxicity via the oral route and low toxicity via the acute dermal or inhalation routes. Additionally, mild irritation was seen in primary eye and skin irritation studies but no dermal sensitization was observed.

Dermal toxicity studies are available for zeta-cypermethrin (rat) and cypermethrin (rabbit), in which local irritation was observed in rats and rabbits at the highest doses tested. No systemic effects were observed in the 21-day dermal study in the rat conducted with zeta-cypermethrin at dose levels up to 1,000 milligrams/kilogram/day (mg/kg/day). In the dermal toxicity study in rabbits with cypermethrin, systemic effects were observed (focal necrosis of the liver, decreased testicular weights, and decreased body weight in females). However, these observations in the rabbit were not used for risk assessment because the testing method (i.e., abraded skin) does not simulate actual exposure and results in compromised test conditions. Additionally, there would be physiological differences between abraded and non-abraded animals, further undermining the relevance of these results for risk assessment.

Developmental toxicity and reproduction studies are available for the cypermethrins. In the developmental toxicity studies in rats with cypermethrin and zeta-cypermethrin, there was no evidence of developmental toxicity up to the highest doses tested. Maternal toxicity included decreased body weight gain and food consumption in both chemicals. Splayed limbs, spasms and hypersensitivity to noise and convulsions were seen with cypermethrin, and ataxia, urine-stained abdominal fur, and fecal-stained fur were seen with zeta-cypermethrin. In the developmental toxicity study in rats with alpha-cypermethrin, offspring effects were limited to decreased fetal body weight. Maternal effects observations in the study were unsteady gait, piloerection, limb splay, and hypersensitivity to sound and touch at the same dose. In the developmental toxicity studies in rabbits with the cypermethrins, there was no evidence of developmental toxicity up to the highest dose tested. Maternal effects seen with cypermethrin included decreased body weight gain, anorexia, abdomino-genital staining, decreased feces, and red or pink material in the pan. With alpha-cypermethrin, maternal effects were body weight loss and decreased food consumption. Multi-generation reproduction studies in rats are available for cypermethrin and zeta-cypermethrin. In the reproduction study with cypermethrin, decreased body weight gain was observed in adult animals and decreased body weight gain was seen in offspring animals at the highest dose tested. In the reproduction study using zeta-cypermethrin, decreased body weight gain and mortality were observed in offspring animals in the presence of mortality, increased brain weights, decreased body weights, and neurotoxicity in maternal animals.

No effects were observed in an immunotoxicity study in rats with alpha-cypermethrin up to the limit dose.

Alpha-cypermethrin is classified as a Group C ''Possible human carcinogen,'' based on an increased incidence of lung adenomas and adenomas plus carcinomas combined in females in a mouse carcinogenicity study. The

presence of common benign tumors (lung adenomas), in one species (mice) and one sex (female), with no increase in the proportion of malignant tumors or decrease in the time-to-tumor occurrence, together with the lack of mutagenic activity, was not considered strong enough to warrant a quantitative estimation of human risk.

Quantification of risk using a non-linear approach (i.e., acute population-adjusted dose (aPAD), acute reference dose (aRfD)) adequately accounts for all chronic toxicity, including carcinogenicity that could result from exposure to alpha-cypermethrin. While the Agency would typically use a chronic population-adjusted dose (cPAD) to protect for cancer concerns, use of the aPAD is protective because increasing toxicity with increasing duration of exposure is not demonstrated for the cypermethrins. The no-observed-adverse-effect-level (NOAEL) observed in the mouse cancer study in which tumors were observed is 14 mg/kg/day, 2-fold higher than the point of departure (POD) used for acute risk assessment. The lowest-observed-adverse-effect-level (LOAEL) in the mouse cancer study is 57 mg/kg/day based on liver effects, not tumor formation. The tumors were seen at 229 mg/kg/day. The acute POD of 7.16 mg/kg/day selected for risk assessment is 32-fold lower than the dose that induced lung tumors in mice. Only the mouse study with cypermethrin resulted in tumor formation, no evidence of carcinogenicity was observed in cancer studies in rats with cypermethrin or mice with alpha-cypermethrin.

Specific information on the studies received and the nature of the adverse effects caused by chemical name as well as the NOAEL and the LOAEL from the toxicity studies can be found at *http://www.regulations.gov* in document Human Health Risk Assessment for New Active Ingredient—Alpha-cypermethrin at pg. 23 in docket ID number EPA–HQ–OPP–2012–0185–0005.

B. Toxicological Points of Departure and Levels of Concern

Once a pesticide's toxicological profile is determined, EPA identifies toxicological POD and levels of concern (LOC) to use in evaluating the risk posed by human exposure to the pesticide. For hazards that have a threshold below which there is no appreciable risk, the toxicological POD is used as the basis for derivation of reference values for risk assessment. PODs are developed based on a careful analysis of the doses in each toxicological study to determine the dose at which no adverse effects are observed and the lowest dose at which adverse effects of concern are identified. Uncertainty/safety factors are used in conjunction with the POD to calculate a safe exposure level—generally referred to as a PAD or a reference dose (RfD)—and a safe margin of exposure (MOE). For non-threshold risks, EPA assumes that any amount of exposure will lead to some degree of risk. Thus, the Agency estimates risk in terms of the probability of an occurrence of the adverse effect expected in a lifetime. For more information on the general principles EPA uses in risk characterization and a complete description of the risk assessment process, see *http://www.epa.gov/pesticides/factsheets/riskassess.htm.*

A summary of the toxicological endpoints for alpha-cypermethrin used for human risk assessment is shown in Table 1 of this unit.

TABLE 1—SUMMARY OF TOXICOLOGICAL DOSES AND ENDPOINTS FOR ALPHA-CYPERMETHRIN FOR USE IN HUMAN HEALTH RISK ASSESSMENT

Exposure/Scenario	POD and uncertainty/safety factors	RfD, PAD, LOC for risk assessment	Study and toxicological effects
Acute dietary (children ≥6 years old and adults).	Wolansky MDL_{1SD} = 7.16 mg/kg/day. UF_A = 10x UF_H = 10x FQPA SF = 1x	aRfD = 0.07 mg/kg/day. aPAD = 0.07 mg/kg/day.	Wolansky BMD = 11.20 mg/kg/day based on motor activity.
Acute dietary (children <6 years old).	Wolansky $BMDL_{1SD}$ = 7.16 mg/kg/day. UF_A = 10x UF_H = 10x FQPA SF = 3x	aRfD = 0.07 mg/kg/day. aPAD = 0.023 mg/kg/day.	Wolansky BMD = 11.20 mg/kg/day based on motor activity.
Chronic dietary (All populations)	Because of the rapid reversibility of the most sensitive neurotoxicity endpoint used for quantifying risks, there is no increase in hazard with increasing dosing duration, and therefore the acute dietary endpoint is protective for chronic exposure.		
Incidental oral short-term (1 to 30 days).	Wolansky $BMDL_{1SD}$ = 7.16 mg/kg/day. UF_A = 10x UF_H = 10x FQPA SF = 3x	LOC for MOE = 300	Wolansky BMD = 11.20 mg/kg/day based on motor activity.
Inhalation short-term (1 to 30 days) (children <6 years old).	Inhalation study ..... NOAEL = 0.01 mg/L HEC = 0.008 mg/L HED = 1.15 mg/kg/day UF_A = 3x UF_H = 10x FQPA SF = 3x	Residential LOC for MOE = 100.	21-day inhalation study in the rat—LOAEL = .05 mg/L based on increased salivation.

TABLE 1—SUMMARY OF TOXICOLOGICAL DOSES AND ENDPOINTS FOR ALPHA-CYPERMETHRIN FOR USE IN HUMAN HEALTH RISK ASSESSMENT—Continued

Exposure/Scenario	POD and uncertainty/safety factors	RfD, PAD, LOC for risk assessment	Study and toxicological effects
Inhalation short-term (1 to 30 days) (children ≥6 years old and adults) (1 to 6 months).	Inhalation study NOAEL = 0.01 mg/L. HEC = 0.008 mg/L HED = 1.15 mg//kg/day UF_A = 3x UF_H = 10x FQPA SF = 1x	LOC for MOE = 30 ..	21-day inhalation study in the rat—LOAEL = 0.05 mg/L based on increased salvation.
Cancer (Oral, dermal, inhalation).	Alpha cypermethrin has been classified as a Group C "Possible human carcinogen based on lung adenomas in female mice. Because of the rapid reversibility of the most sensitive neurotoxicity endpoint used for quantifying risks, there is no increase in hazard with increasing dosing duration. Therefore, the acute dietary endpoint is protective of the endpoints from repeat dosing studies, including cancer dietary exposures.		

Point of Departure (POD) = A data point or an estimated point that is derived from observed dose-response data and used to mark the beginning of extrapolation to determine risk associated with lower environmentally relevant human exposures. NOAEL = no observed adverse effect level. LOAEL = lowest observed adverse effect level. BMD = benchmark dose. BMDL = benchmark dose (lower confidence limit). UF = uncertainty factor. UFA = extrapolation from animal to human (interspecies). UFH = potential variation in sensitivity among members of the human population (intraspecies). FQPA SF = FQPA Safety Factor. PAD = population adjusted dose (a = acute, c = chronic). RfD = reference dose. MOE = margin of exposure. LOC = level of concern. N/A = not applicable. HEC = human equivalent concentration. HED = human equivalent dose. Mg/kg/day = milligrams/kilogram/day. Mg/L = milligrams/liter.

C. Exposure Assessment

1. *Dietary exposure from food and feed uses.* In evaluating dietary exposure to alpha-cypermethrin, EPA considered exposure under the petitioned-for tolerances as well as all existing cypermethrin and zeta-cypermethrin tolerances in 40 CFR 180.418. EPA assessed dietary exposures from alpha-cypermethrin in food as follows:

i. *Acute exposure.* Quantitative acute dietary exposure and risk assessments are performed for a food-use pesticide, if a toxicological study has indicated the possibility of an effect of concern occurring as a result of a 1-day or single exposure. Such effects were identified for alpha-cypermethrin.

In assessing aggregate risk to alpha-cypermethrin, EPA considered not only the exposure associated with the proposed food uses for alpha-cypermethrin, but also the potential dietary and drinking water contribution and residential exposure from existing uses of cypermethrin and zeta-cypermethrin. In estimating acute dietary exposure, EPA used food consumption information from the U.S. Department of Agriculture (USDA) 1994–1996 and 1998 Nationwide Continuing Surveys of Food Intake by Individuals (CSFII). As to residue levels in food, EPA used a partially refined (probabilistic) dietary exposure assessment to determine the exposure and risk estimates which result from the use of cypermethrins on the crops listed under 40 CFR 180.418 and the proposed new uses. Anticipated residues from USDA Pesticide Data Program (PDP) monitoring data, field trial data, and empirical processing factors, and percent crop treated (PCT) estimates for some commodities were used where appropriate.

ii. *Chronic exposure.* Based on the data summarized in Unit III.A., there is no increase in hazard from repeated exposures to alpha-cypermethrin; the acute dietary exposure assessment is higher than for chronic dietary exposures because the acute exposure levels are greater than the chronic exposure levels, therefore, a chronic dietary risk assessment was not conducted.

iii. *Cancer.* As noted in Unit III.A., the Agency has determined that quantification of risk using a non-linear approach (i.e., aPAD) will adequately account for all chronic toxicity, including carcinogenicity, that could result from exposure to alpha-cypermethrin. Additionally, because an assessment of cancer risk would estimate exposure based on average residue levels and the acute assessment used high-end residue levels, the acute dietary assessment will be protective of any cancer effects resulting from consumption of alpha-cypermethrin residues in foods.

iv. *Anticipated residue and PCT information.* Section 408(b)(2)(E) of FFDCA authorizes EPA to use available data and information on the anticipated residue levels of pesticide residues in food and the actual levels of pesticide residues that have been measured in food. If EPA relies on such information, EPA must require pursuant to FFDCA section 408(f)(1) that data be provided 5 years after the tolerance is established, modified, or left in effect, demonstrating that the levels in food are not above the levels anticipated. For the present action, EPA will issue such Data Call-Ins as are required by FFDCA section 408(b)(2)(E) and authorized under FFDCA section 408(f)(1). Data will be required to be submitted no later than 5 years from the date of issuance of these tolerances demonstrating that the levels in food are not above the levels anticipated.

Section 408(b)(2)(F) of FFDCA states that the Agency may use data on the actual percent of food treated for assessing chronic dietary risk only if:

- Condition a: The data used are reliable and provide a valid basis to show what percentage of the food derived from such crop is likely to contain the pesticide residue.
- Condition b: The exposure estimate does not underestimate exposure for any significant subpopulation group.
- Condition c: Data are available on pesticide use and food consumption in a particular area, the exposure estimate does not understate exposure for the population in such area.

In addition, the Agency must provide for periodic evaluation of any estimates used. To provide for the periodic evaluation of the estimate of PCT as required by FFDCA section 408(b)(2)(F), EPA may require registrants to submit data on PCT. The following maximum PCT estimates were used in the acute dietary risk assessment, which was relied on in assessing chronic risk, for the following crops that are currently registered for the cypermethrins: Almonds, 2.5%; apples, 2.5%; broccoli, 30%; cabbage, 30%; carrot, 10%; cauliflower, 25%; celery, 60%; cherries, 5%; grapefruit, 50%; green beans, 20%; green peas, 15%; lemon, 2.5%; lettuce, 65%; orange, 45%; peach, 5%; peppers, 30%; potato, 5%; sweet corn, 20%; spinach, 45%; tomato, 10%; and watermelon, 10%.

The following average PCT estimates were used to calculate average dietary exposures in order to assess short-term aggregate risk to the cypermethrins: Almonds, 1%; apples, 1%; broccoli, 20%; cabbage, 15%; carrot, 2.5%; cauliflower, 15%; celery, 35%; cherries, 5%; grapefruit, 35%; green beans, 15%; green peas, 10%; lemon, 1%; lettuce, 55%; orange, 35%; peach, 2.5%; peppers, 15%; potato, 1%; sweet corn, 15%; spinach, 30%; tomato, 5%; and watermelon, 2.5%. The zeta-cypermethrin PCT data was used as a surrogate for future PCT of alpha-cypermethrin.

In most cases, EPA uses available data from the U.S. Department of Agriculture/National Agricultural Statistics Service (USDA/NASS), proprietary market surveys, and the National Pesticide Use Database for the chemical/crop combination for the most recent 6–7 years. EPA uses an average PCT for chronic dietary risk analysis. The average PCT figure for each existing use is derived by combining available public and private market survey data for that use, averaging across all observations, and rounding to the nearest 5%, except for those situations in which the average PCT is less than 1. In those cases, 1% is used as the average PCT and 2.5% is used as the maximum PCT. EPA uses a maximum PCT for acute dietary risk analysis. The maximum PCT figure is the highest observed maximum value reported within the recent 6 years of available public and private market survey data for the existing use and rounded up to the nearest multiple of 5%.

The Agency believes that the three conditions discussed in Unit III.C.1.iv. have been met. With respect to Condition a, PCT estimates are derived from Federal and private market survey data, which are reliable and have a valid basis. The Agency is reasonably certain that the percentage of the food treated is not likely to be an underestimation. As to Conditions b and c, regional consumption information and consumption information for significant subpopulations is taken into account through EPA's computer-based model for evaluating the exposure of significant subpopulations including several regional groups. Use of this consumption information in EPA's risk assessment process ensures that EPA's exposure estimate does not understate exposure for any significant subpopulation group and allows the Agency to be reasonably certain that no regional population is exposed to residue levels higher than those estimated by the Agency. Other than the data available through national food consumption surveys, EPA does not have available reliable information on the regional consumption of food to which alpha-cypermethrin may be applied in a particular area.

2. *Dietary exposure from drinking water.* The Agency used screening level water exposure models in the dietary exposure analysis and risk assessment for alpha-cypermethrin in drinking water. These simulation models take into account data on the physical, chemical, and fate/transport characteristics of alpha-cypermethrin. Further information regarding EPA drinking water models used in pesticide exposure assessment can be found at *http://www.epa.gov/oppefed1/models/water/index.htm.*

Based on the First Index Reservoir Screening Tool (FIRST) and Screening Concentration in Ground Water (SCI–GROW) models the estimated drinking water concentrations (EDWCs) of alpha-cypermethrin were 3.77 parts per billion (ppb) for surface water and 0.0036 ppb for ground water. In the dietary risk assessment conducted to support the proposed uses, EPA incorporated the surface water EDWCs directly into the dietary model, since surface water estimates were higher than those provided for ground water.

3. *From non-dietary exposure.* The term ''residential exposure'' is used in this document to refer to non-occupational, non-dietary exposure (e.g., for lawn and garden pest control, indoor pest control, termiticides, and flea and tick control on pets). Alpha-cypermethrin is not registered for any specific use patterns that would result in residential exposure. There are no proposed residential uses associated with alpha-cypermethrin; however, there are registered residential uses for cypermethrin and zeta-cypermethrin that have been reassessed to reflect updates to the Agency's 2012 Residential standard operating procedures (SOPs) along with policy changes for body weight assumptions and inhalation rates. These revised residential exposures have been incorporated into the human health aggregate risk assessment for alpha-cypermethrin, which must consider all potential exposures to the cypermethrins. The Agency has determined that short-term exposures are likely to occur in a residential setting for the cypermethrins; however, they do not increase in potency with repeated dosing. EPA assessed residential exposure using the following assumptions. The quantitative exposure/risk assessment developed for residential handlers is based on the following scenarios:

- Mixer/loader/applicator using hose-end sprayer on turf;
- Mixer/loader/applicator using backpack on turf and gardens;
- Mixer/loader/applicator using manually pressurized handwand for indoor surfaces;
- Application via aerosol can for indoor surfaces and space.

Since a dermal endpoint was not identified, only a quantitative inhalation handler exposure assessment was performed. Residential handler inhalation exposure estimates were calculated based on a human equivalent concentration and human equivalent dose which reflect 24 hours of exposure. Since handler exposure is expected to be significantly less than 24 hours, the inhalation exposure estimates are sufficiently protective of all scenarios (turf, gardens, and indoor surface space). Although there is potential inhalation exposure resulting from the application of dog tags and spot-on products for pets, inhalation exposure is considered negligible for these scenarios and therefore a quantitative assessment was not performed for these uses.

There is the potential for post-application exposure for individuals as a result of being in an environment that has been previously treated with cypermethrin or zeta-cypermethrin. However, the combination of low vapor pressure for chemicals typically used as active ingredients in outdoor residential pesticide products and dilution in outdoor air is likely to result in minimal inhalation exposure. Therefore, a quantitative post-application inhalation exposure assessment for cypermethrin turf uses was not conducted. Since a dermal endpoint was not identified, and indoor post-application inhalation exposure resulting from aerosol space sprays, foggers, and pet (i.e., dog tag, spot-on) uses is negligible, the only

potential post-application exposure pathways of concern are incidental oral for children, and post-application inhalation exposure for adults and children resulting from indoor crack and crevice applications made with a manually pressurized handwand. The quantitative exposure/risk assessment for residential post-application exposures is based on the following scenarios:

- Incidental oral (hand-to-mouth, object-to-mouth, and soil ingestion) exposure from turf for children.
- Incidental oral (hand-to-mouth and object-to-mouth) exposure from indoor foggers for children.
- Incidental oral (hand-to-mouth and object-to-mouth) exposure from pets for children.
- Inhalation exposure for adults and children resulting from crack and crevice application to an indoor surface.
- Incidental oral (hand-to-mouth and object-to-mouth) exposure for children from indoor surface applications.

Risk estimates resulting from different exposure routes may be combined when it is likely that they can occur simultaneously based on the use pattern and when the toxicological effects across different routes of exposure are the same. Although, in the case of children, inhalation and incidental oral exposure routes share a common toxicological endpoint, risk estimates were not combined for those routes for turf, indoor fogger, and pet since post-application inhalation exposure is considered negligible. However, inhalation and incidental oral exposures were combined for post-application risk assessment associated with the indoor crack and crevice use. Inhalation and incidental oral routes have different LOCs. Therefore, in order to combine exposure from the various routes, the aggregate risk index (ARI) approach is used to estimate exposure and risk. When this approach is used, aggregate risks are not of concern provided the calculated ARI is greater than 1.

The incidental oral scenarios from indoor exposure following crack and crevice applications and outdoor exposure from turf were not combined, not only because they are not likely to co-occur, but also because combining these scenarios would be overly-conservative due to the conservative nature of each of the individual assessments.

Further information regarding EPA standard assumptions and generic inputs for residential exposures may be found at *http://www.epa.gov/pesticides/trac/science/trac6a05.pdf.*

4. *Cumulative effects from substances with a common mechanism of toxicity.* Section 408(b)(2)(D)(v) of FFDCA requires that, when considering whether to establish, modify, or revoke a tolerance, the Agency consider ''available information'' concerning the cumulative effects of a particular pesticide's residues and ''other substances that have a common mechanism of toxicity.''

The Agency is required to consider the cumulative risks of chemicals sharing a common mechanism of toxicity. The Agency has determined that the pyrethroids and pyrethrins, including the cypermethrins, share a common mechanism of toxicity. The members of this group share the ability to interact with voltage-gated sodium channels, ultimately leading to neurotoxicity. The cumulative risk assessment for the pyrethroids and pyrethrins was published in the **Federal Register** on November 9, 2011 (76 FR 69726) (FRL–8888–9), and is available at *http://www.regulations.gov in the public docket, EPA–HQ–OPP–2011–0746.* Further information about the determination that pyrethroids and pyrethrins share a common mechanism of toxicity may be found in document ID: EPA–HQ–OPP–2008–0489–0006.

The cypermethrins were included in a recent cumulative risk assessment for pyrethrins and pyrethroids. The proposed new uses of alpha-cypermethrin will not significantly impact the cumulative assessment because, in the cumulative assessment, residential exposure was the greatest contributor to the total exposure. There are no new residential uses for the cypermethrins, and the proposed new uses will have no impact on the residential component of the cumulative risk estimates.

Dietary exposures make a minor contribution to total pyrethroid exposure. The dietary exposure assessment performed in support of the pyrethroid cumulative was much more highly refined than that performed for the single chemical. The dietary exposure assessment for the single chemical included conservative assumptions, using field trial data for many commodities, including the proposed new uses, with the assumption of 100 PCT, and the most sensitive apical endpoint in the cypermethrins hazard database was selected to derive the POD. Additionally, the POD selected for alpha-cypermethrin is specific to the cypermethrins, whereas the POD selected for the cumulative assessment was based on-common-mechanism-of-action data that are appropriate for all 20 pyrethroids included in the cumulative assessment.

For information regarding EPA's efforts to evaluate the risk of exposure to pyrethroids, refer to *http://www.epa.gov/oppsrrd1/reevaluation/pyrethroids-pyrethrins.html.*

D. Safety Factor for Infants and Children

1. *In general.* Section 408(b)(2)(C) of FFDCA provides that EPA shall apply an additional tenfold (10X) margin of safety for infants and children in the case of threshold effects to account for prenatal and postnatal toxicity and the completeness of the database on toxicity and exposure unless EPA determines based on reliable data that a different margin of safety will be safe for infants and children. This additional margin of safety is commonly referred to as the Food Quality Protection Act (FQPA) Safety Factor (SF). In applying this provision, EPA either retains the default value of 10X, or uses a different additional safety factor when reliable data available to EPA support the choice of a different factor.

2. *Prenatal and postnatal sensitivity.* In guideline developmental and reproduction studies with the cypermethrins, there was no evidence of increased qualitative or quantitative susceptibility in rats or rabbits.

In a guideline developmental neurotoxicity (DNT) study with zeta-cypermethrin, there was increased sensitivity in the offspring based on body weight changes in pups (5%–10%) in the absence of treatment-related effects in maternal animals. Although, there was a 5%–8% decrease in maternal body weight in this study, a body weight decrease of <10% is generally not considered adverse in adults, as this is considered to be within the range of variability because the magnitude of body weight *per se* is typically small (as an example, a 3 gram (g) decrease in body weight from a 338 g rat), and adults are no longer in the growth/development phase. In contrast, the offspring are at a stage of growth and development and are therefore expected to be gaining rather than losing weight. Thus, a smaller percent decrease in body weight is considered adverse in the young relative to adults. In the case of zeta-cypermethrin, the decrease in body weight of the young is comparable to adults; however, it was considered adverse in the young but not in the adults. This disparity in interpretation leads to an apparent increase in sensitivity in the young; however, concern is reduced since the magnitude of body weight decrements was similar in adult and young animals. The results from the DNT study are very similar to results observed in the reproduction

studies where body weight (bwt) changes (decreased body weight gain) were seen in maternal and offspring animals at doses similar to those in the DNT study, with no indication of increased susceptibility. Therefore, there is no residual concern for effects observed in the study. Additionally, there are well-characterized dose responses, with clear NOAELs and LOAELs for effects seen in the DNT and reproduction studies, and the endpoints and PODs selected for risk assessment are protective.

High-dose LD_{50} studies (studies assessing what dose results in lethality to 50% of the tested population) in the scientific literature indicate that pyrethroids can result in increased quantitative sensitivity in the young, typically in the form of neurotoxicity. Examination of pharmacokinetic and pharmacodynamic data indicates that the sensitivity observed at high doses is related to pyrethroid age-dependent pharmacokinetics—the activity of enzymes associated with the metabolism of pyrethroids. With otherwise equivalent administered doses for adults and juveniles, predictive pharmacokinetic models indicate that the differential adult-juvenile pharmacokinetics will result in a 3X greater dose at the target organ in juveniles compared to adults. No evidence of increased quantitative or qualitative susceptibility was seen in the pyrethroid scientific literature related to pharmacodynamics (the effect of pyrethroids at the target tissue) both with regard to inter-species differences between rats and humans and to differences between juveniles and adults. Specifically, there are *in vitro* pharmacodynamic data and *in vivo* data indicating similar responses between adult and juvenile rats at low doses and data indicating that the rat is a conservative model compared to the human based on species-specific pharmacodynamics of homologous sodium channel isoforms in rats and humans.

3. *Conclusion.* The FQPA SF was reduced to 1X for the general population, women of child bearing age and children > 6 years. For exposures from birth to <6 years of age, a 3X FQPA SF was retained based on the following considerations:

i. The toxicology database for the cypermethrins is not complete. While the database is considered to be complete with respect to the guideline toxicity studies for alpha-cypermethrin, EPA lacks additional data to fully characterize the potential for juvenile sensitivity to neurotoxic effects of pyrethroids. In light of the literature studies indicating a possibility of increased sensitivity to cypermethrins in juvenile rats at high doses, EPA has requested proposals for study protocols which could identify and quantify potential juvenile sensitivity. However, when evaluated together, the toxicity studies for the cypermethrins can be used to characterize toxic effects including potential developmental and reproductive toxicity, immunotoxicity, and neurotoxicity. Acceptable developmental toxicity studies in rats and rabbits, reproduction studies in rats, neurotoxicity studies (acute neurotoxicity (ACN), subchronic neurotoxicity (SCN), and DNT) in rats, and immunotoxicity studies in rats are available. In addition, route-specific dermal and inhalation studies are available.

ii. After reviewing the extensive body of data and peer-reviewed literature on pyrethroids, the Agency has reached a number of conclusions regarding fetal juvenile sensitivity for pyrethroids, including the following:

- Based on an evaluation of over 70 guideline toxicity studies for 24 pyrethroids submitted to the Agency, including prenatal developmental toxicity studies in rats and rabbits, and prenatal and postnatal multi-generation reproduction toxicity studies and DNTs in rats in support of pyrethroid registrations, there is no evidence that pyrethroids directly impact developing fetuses. None of the studies show any indications of fetal toxicity at doses that do not cause maternal toxicity.
- Increased susceptibility was seen in offspring animals in the DNT study with zeta-cypermethrin (decreased pup body weights) and DNT and reproduction studies with beta-cyfluthrin (decreased body weights and tremors). However, the reductions in body weight and the other non-specific effects occur at higher doses than neurotoxicity, the effect of concern for pyrethroids. The available developmental and reproduction guideline studies in rats with zeta-cypermethrin did not show increased sensitivity in the young to neurotoxic effects. Overall, findings of increased sensitivity in juvenile animals in pyrethroid studies are rare. Therefore, the residual concern for the postnatal effects is reduced.
- High-dose LD_{50} studies (studies assessing what dose results in lethality to 50% of the tested population) in the scientific literature indicate that pyrethroids can result in increased quantitative sensitivity to juvenile animals. Examination of pharmacokinetic and pharmacodynamic data indicates that the sensitivity observed at high doses is related to pyrethroid age-dependent pharmacokinetics—the activity of enzymes associated with the metabolism of pyrethroids. Furthermore, a rat PBPK model predicts a three-fold increase of pyrethroid concentration in juvenile brain compared to adults at high doses.
- *In vitro* pharmacodynamic data and *in vivo* data indicate that adult and juvenile rats have similar responses to pyrethroids at low doses and therefore juvenile sensitivity is not expected at relevant environmental exposures. Further, data also show that the rat is a conservative model compared to the human based on species-specific pharmacodynamics of homologous sodium channel isoforms.

iii. There are no residual uncertainties with regard to dietary and residential exposure. The dietary exposure assessments are based on high-end health protective residue levels (that account for parent and metabolites of concern), processing factors, and PCT assumptions. Furthermore, conservative, upper-bound assumptions were used to determine exposure through drinking water and residential sources, such that these exposures have not been underestimated.

Taking all of this information into account, EPA has reduced the FQPA SF for women of child-bearing age and children over 6 years to 1X since after evaluation of over 70 guideline toxicity studies submitted to the Agency, including prenatal developmental toxicity studies in rats and rabbits, and multi-generation reproduction toxicity studies and DNTs in rats, there is no evidence that pyrethroids directly impact developing fetuses. Additionally, none of the studies show any indications of fetal/offspring toxicity at doses that do not cause maternal toxicity. However, since there remains some uncertainty as to juvenile sensitivity due to the findings in the high-dose LD_{50} studies, EPA is retaining a FQPA SF for infants and children less than 6 years of age. This age group is a close approximation to the most sensitive human population, children from birth to <6 years old. EPA is seeking additional data to further characterize the potential neurotoxic risk pyrethroid toxicity. However, EPA has reliable data that show that reducing the FQPA SF to 3X will protect the safety of infants and children. These data include:

(a) data from guideline studies with zeta-cypermethrin at relatively high doses that show no sensitivity with regard to neurotoxic effects (the most sensitive effect for the pyrethroids) and no residual concern regarding overall

juvenile sensitivity (i.e., sensitivity seen in body weight changes occurred at doses above the level chosen for the POD);

(b) data showing that the potential sensitivity at high doses is due to pharmacokinetics alone;

(c) a rat PBPK model predicting a three-fold increase of pyrethroid concentration in juvenile brain compared to adults at high doses due to age-dependent pharmacokinetics; and

(d) data indicating that the rat is a conservative model compared to the human based on species-specific pharmacodynamics of homologous sodium channel isoforms.

For several reasons, EPA concludes these data show that a 3X factor is protective of the safety of infants and children. First, it is likely that the extensive guideline studies with zeta-cypermethrin showing no neurotoxicity sensitivity between adults and juveniles better characterize the potential sensitivity of juvenile animals than the LD_{50} studies. The high doses that produced juvenile sensitivity in the literature studies are well above normal dietary or residential exposure levels of pyrethroids to juveniles and lower levels of exposure anticipated from dietary and residential uses are not expected to overwhelm the juvenile's ability to metabolize pyrethroids, as occurred with the high doses used in the literature studies. The lack of increased neurotoxic sensitivity of the young in the overwhelming majority (69 of 70) of the prenatal and postnatal guideline studies for pyrethroids supports this conclusion, despite the relatively high doses used in those studies. Second, limited *in vitro* and *in vivo* data indicate similar pharmacodynamic response to pyrethroids between juvenile and adult rats. The portion of the uncertainty factor that accounts for potential pharmacodynamic differences between animals and humans (i.e., the inter-species extrapolation factor) is likely to overstate the risk of the cypermethrins given the data showing similarities in pharmacodynamics between animals and humans. For the inter-species factor, the pharmacodynamic portion of the factor is generally considered to be 3X. However, for pyrethroids the actual difference is likely to be lower than 3X. In addition, there are data that show that there are no lifestage pharmacodynamic differences between young and adult rats. Standard uncertainty factors, such as those used in the cypermethrin risk assessment, assume that there will be such differences. Finally, as indicated, pharmacokinetic modeling only predicts a 3X difference between juveniles and adults. Thus, even if there is increased juvenile neurotoxic sensitivity and even if the existing interspecies and intraspecies factors do not provide extra protection due to the conservative nature of their pharmacodynamic components for pyrethroids, the 3X additional factor will protect the young. Therefore, the FQPA factor of 3X is protective of potential juvenile sensitivity.

E. Aggregate Risks and Determination of Safety

EPA determines whether acute and chronic dietary pesticide exposures are safe by comparing aggregate exposure estimates to the aPAD and cPAD. For linear cancer risks, EPA calculates the lifetime probability of acquiring cancer given the estimated aggregate exposure. Short-, intermediate-, and chronic-term risks are evaluated by comparing the estimated aggregate food, water, and residential exposure to the appropriate PODs to ensure that an adequate MOE exists.

1. *Acute risk.* Using the exposure assumptions discussed in this unit for acute exposure, the acute dietary exposure from food and water to alpha-cypermethrin will occupy 87% of the aPAD for all infants (<1 year old) and children 1–2 years old, the population groups receiving the greatest exposure. This assessment is considered to be conservative, because tolerance level residues and distributions of field trial data (as opposed to monitoring data) were used for many commodities. Additionally, although upper-bound estimates were used for drinking water, drinking water is not considered to be a major source of dietary exposure for the cypermethrins.

2. *Chronic risk.* Separate chronic and cancer dietary risk assessments were not conducted for the cypermethrins. Because of the rapid reversibility of the most sensitive neurotoxicity endpoint used for quantifying risks, there is no increase in hazard with increasing dosing duration, and therefore the acute dietary endpoint is protective for chronic and cancer dietary exposures.

3. *Short-term risk.* Short-term aggregate exposure takes into account short-term residential exposure plus chronic exposure to food and water (considered to be a background exposure level).

Cypermethrin and zeta-cypermethrin are currently registered for uses that could result in short-term residential exposure, and the Agency has determined that it is appropriate to aggregate chronic exposure through food and water with short-term residential exposures to the cypermethrins including alpha-cypermethrin.

For assessing short-term aggregate risk, the average dietary exposure estimate was used since it represents a background exposure level from food and drinking water that may co-occur with residential exposures. Dietary and oral (hand to mouth) risks for children, and dietary and inhalation risks for adults were combined in this assessment, since the toxicological endpoints were the same. However, the level of concern (LOC) values were different (oral adults and children ≥6 years old = 100; children <6 years old = 300), while inhalation LOC = 30. Therefore, the respective risk estimates are combined using the aggregate risk index (ARI) approach. When this approach is used, aggregate risks are not of concern provided the calculated ARI is greater than 1. The ARI for adults was calculated to be 56 and the ARI for children was 2.3. Because these ARIs are greater than 1, the risk estimates are not of concern.

4. *Intermediate-term risk.* Intermediate-term aggregate exposure takes into account intermediate-term residential exposure plus chronic exposure to food and water (considered to be a background exposure level). An intermediate-term aggregate risk assessment was not conducted because the cypermethrins are acutely toxic and do not increase in potency with repeated dosing. Because the neurotoxicity POD used for acute risk assessment is lower (more protective) than PODs for longer durations of exposure and acute and short-term exposure levels are higher than longer term exposure levels, the acute and short-term aggregate assessments are protective for intermediate-term aggregate risks anticipated from the cypermethrins.

5. *Aggregate cancer risk for U.S. population.* For the reasons discussed in Unit III.A. (cancer effects are non-linear and appear at higher doses than acute effects) and Unit III.E.2. (chronic exposures are lower than acute exposures), the acute aggregate assessment is protective of potential cancer risk.

6. *Determination of safety.* Based on these risk assessments, EPA concludes that there is a reasonable certainty that no harm will result to the general population, or to infants and children from aggregate exposure to the cypermethrin residues.

IV. Other Considerations

A. Analytical Enforcement Methodology

Adequate tolerance-enforcement methods are available in PAM Volume II for determining residues of cypermethrin, zeta-cypermethrin and alpha-cypermethrin in plant (Method I) and livestock (Method II) commodities. Both methods are gas chromatographic methods with electron-capture detection (GC/ECD), and have undergone successful Agency petition method validations (PMVs). Method I has a limit of detection (LOD) of 0.01 ppm, and Method II has LODs of 0.005 ppm in milk, and 0.01 ppm in livestock tissues. These methods are not stereospecific; thus no distinction is made between residues of cypermethrin (all eight stereoisomers), zeta-cypermethrin (enriched in four isomers) and alpha-cypermethrin (two isomers).

B. International Residue Limits

In making its tolerance decisions, EPA seeks to harmonize U.S. tolerances with international standards whenever possible, consistent with U.S. food safety standards and agricultural practices. EPA considers the international maximum residue limits (MRLs) established by the Codex Alimentarius Commission (Codex), as required by FFDCA section 408(b)(4). The Codex Alimentarius is a joint United Nations Food and Agriculture Organization/World Health Organization food standards program, and it is recognized as an international food safety standards-setting organization in trade agreements to which the United States is a party. EPA may establish a tolerance that is different from a Codex MRL; however, FFDCA section 408(b)(4) requires that EPA explain the reasons for departing from the Codex level.

There are multiple Codex MRLs for alpha-cypermethrin, but all are in conjunction with MRLs for total cypermethrin isomers (no MRLs have been established solely for alpha-cypermethrin). However, although the definitions of the isomers covered differ formally between U.S. tolerances and Codex MRLs, the definitions of coverage are effectively harmonized since the tolerance enforcement methods are not stereospecific, and thus do not distinguish between residues of cypermethrin, zeta-cypermethrin and alpha-cypermethrin. For enforcement purposes, the same moiety is being regulated. As to harmonization of tolerance levels, U.S. tolerances and Codex MRLs are identical for tree nuts, tomatoes, and cattle meat byproducts. However, the proposed U.S. use patterns for all of the other crops for which U.S. tolerances are being established differ from the use patterns underlying the Codex MRLs associated with these crops. Therefore, these U.S. tolerances cannot be established at the same level as the Codex MRLs.

C. Response to Comments

There were no comments received on this petition.

D. Revisions to Petitioned-For Tolerances

No revisions to the tolerance levels in the petition, as proposed by BASF, were necessary. However, all the proposed commodity definitions (except for soybean, seed) were revised to reflect the correct commodity definitions, per the Agency's current commodity vocabulary. Additionally, appropriate tolerances for alpha-cypermethrin in livestock commodities (which were not proposed by BASF) were added (reflecting those established for zeta-cypermethrin), based on the potential for residues in livestock feed items associated with the proposed uses.

V. Conclusion

Therefore, tolerances are established for residues of alpha-cypermethrin ((*R*)-cyano(3-phenoxyphenyl)methyl (1*S*,3*S*)-rel-3-(2,2-dichloroethenyl)-2,2-dimethylcyclopropane carboxylate, in or on cotton, undelinted seed, vegetable, legume, edible podded, subgroup 6A, and sorghum, grain, grain at 0.50 ppm; vegetable, root and tuber, group 1, except sugar beet, pea and bean, succulent shelled, subgroup 6B, and hog, fat at 0.10 ppm; nut, tree, group 14–12, pea and bean, dried shelled, except soybean, subgroup 6C, corn, field, grain, corn, pop, grain, corn, sweet, kernel plus cob with husks removed, soybean, seed, beet, sugar, roots, cattle, meat byproducts, egg, goat, meat byproducts, hog, meat, horse, meat byproducts, poultry, fat, poultry, meat, and sheep, meat byproducts at 0.05 ppm; vegetable, leafy, group 4 at 10 ppm; *Brassica,* head and stem, subgroup 5A at 2.0 ppm; rice, grain at 1.5 ppm; vegetable, cucurbit, group 9, vegetable, fruiting, group 8–10, beet, sugar, tops, wheat, grain, cattle, meat, goat, meat, horse, meat, and sheep, meat at 0.20 ppm; fruit, citrus, group 10–10 at 0.35 ppm; citrus, oil at 4.0 ppm; citrus, dried pulp at 1.8 ppm; alfalfa, hay at 15 ppm; cattle, fat, goat, fat, horse, fat, sheep, fat at 1.0 ppm; and milk, fat, reflecting at 0.10 ppm in whole milk at 2.5 ppm.

VI. Statutory and Executive Order Reviews

This final rule establishes tolerances under FFDCA section 408(d) in response to a petition submitted to the Agency. The Office of Management and Budget (OMB) has exempted these types of actions from review under Executive Order 12866, entitled ''Regulatory Planning and Review'' (58 FR 51735, October 4, 1993). Because this final rule has been exempted from review under Executive Order 12866, this final rule is not subject to Executive Order 13211, entitled ''Actions Concerning Regulations That Significantly Affect Energy Supply, Distribution, or Use'' (66 FR 28355, May 22, 2001) or Executive Order 13045, entitled ''Protection of Children from Environmental Health Risks and Safety Risks'' (62 FR 19885, April 23, 1997). This final rule does not contain any information collections subject to OMB approval under the Paperwork Reduction Act (PRA) (44 U.S.C. 3501 *et seq.*), nor does it require any special considerations under Executive Order 12898, entitled ''Federal Actions to Address Environmental Justice in Minority Populations and Low-Income Populations'' (59 FR 7629, February 16, 1994).

Since tolerances and exemptions that are established on the basis of a petition under FFDCA section 408(d), such as the tolerance in this final rule, do not require the issuance of a proposed rule, the requirements of the Regulatory Flexibility Act (RFA) (5 U.S.C. 601 *et seq.*), do not apply.

This final rule directly regulates growers, food processors, food handlers, and food retailers, not States or tribes, nor does this action alter the relationships or distribution of power and responsibilities established by Congress in the preemption provisions of FFDCA section 408(n)(4). As such, the Agency has determined that this action will not have a substantial direct effect on States or tribal governments, on the relationship between the national government and the States or tribal governments, or on the distribution of power and responsibilities among the various levels of government or between the Federal Government and Indian tribes. Thus, the Agency has determined that Executive Order 13132, entitled ''Federalism'' (64 FR 43255, August 10, 1999) and Executive Order 13175, entitled ''Consultation and Coordination with Indian Tribal Governments'' (65 FR 67249, November 9, 2000) do not apply to this final rule. In addition, this final rule does not impose any enforceable duty or contain any unfunded mandate

as described under Title II of the Unfunded Mandates Reform Act of 1995 (UMRA) (2 U.S.C. 1501 *et seq.*).

This action does not involve any technical standards that would require Agency consideration of voluntary consensus standards pursuant to section 12(d) of the National Technology Transfer and Advancement Act of 1995 (NTTAA) (15 U.S.C. 272 note).

VII. Congressional Review Act

Pursuant to the Congressional Review Act (5 U.S.C. 801 *et seq.*), EPA will submit a report containing this rule and other required information to the U.S. Senate, the U.S. House of Representatives, and the Comptroller General of the United States prior to publication of the rule in the **Federal Register**. This action is not a ''major rule'' as defined by 5 U.S.C. 804(2).

List of Subjects in 40 CFR Part 180

Environmental protection, Administrative practice and procedure, Agricultural commodities, Pesticides and pests, Reporting and recordkeeping requirements.

Dated: January 23, 2013.

Steven Bradbury,

Director, Office of Pesticide Programs.

Therefore, 40 CFR chapter I is amended as follows:

PART 180—[AMENDED]

■ 1. The authority citation for part 180 continues to read as follows:

Authority: 21 U.S.C. 321(q), 346a and 371.

■ 2. In § 180.418 add paragraph (a)(3) to read as follows:

§ 180.418 Cypermethrin and an isomer alpha-cypermethrin; tolerances for residues.

(a) * * *

(3) Tolerances are established for residues of the insecticide, alpha-cypermethrin, (*R*)-cyano(3-phenoxyphenyl)methyl (1*S*,3*S*)-rel-3-(2,2-dichloroethenyl)-2,2-dimethylcyclopropane carboxylate, including its metabolites and degradates, in or on the commodities in the table below. Compliance with the tolerance levels specified below is to be determined by measuring only total cypermethrin, cyano(3-phenoxyphenyl)methyl 3-(2,2-dichloroethenyl)-2,2-dimethylcyclopropane carboxylate, in or on the commodity.

Commodity	Parts per million
Alfalfa, hay	15
Beet, sugar, roots	0.05
Beet, sugar, tops	0.20
Brassica, head and stem, subgroup 5A	2.0
Cattle, fat	1.0
Cattle, meat	0.20
Cattle, meat byproducts	0.05
Citrus, dried pulp	1.8
Citrus, oil	4.0
Corn, field, grain	0.05
Corn, pop, grain	0.05
Corn, sweet, kernel plus cob with husks removed	0.05
Cotton, undelinted seed	0.50
Egg	0.05
Fruit, citrus, group 10–10	10
Goat, fat	1.0
Goat, meat	0.20
Goat, meat byproducts	0.05
Hog, fat	1.0
Hog, meat	0.05
Horse, fat	1.0
Horse, meat	0.20
Horse, meat byproducts	0.05
Milk, fat, reflecting 0.10 ppm in whole milk	2.5
Nut, tree, group 14–12	0.05
Pea and bean, dried shelled, except soybean, subgroup 6C	0.05
Pea and bean, succulent shelled, subgroup 6B	0.10
Poultry, fat	0.05
Poultry, meat	0.05
Rice, grain	1.5
Sheep, fat	1.0
Sheep, meat	0.20
Sheep, meat byproducts	0.05
Sorghum, grain, grain	0.50
Soybean, seed	0.05
Vegetable, cucurbit, group 9	0.20
Vegetable, fruiting, group 8–10	0.20
Vegetable, leafy, group 4	10
Vegetable, legume, edible podded, subgroup 6A	0.50
Vegetable, root and tuber, group 1, except sugar beet	0.10
Wheat, grain	0.20

* * * * *

[FR Doc. 2013–02206 Filed 1–31–13; 8:45 am]

BILLING CODE 6560–50–P

ENVIRONMENTAL PROTECTION AGENCY

40 CFR Part 180

[EPA–HQ–OPP–2012–0789; FRL–9376–1]

2-Pyrrolidone, 1-Ethenyl-, Polymer With Ethenol; Tolerance Exemption

AGENCY: Environmental Protection Agency (EPA).

ACTION: Final rule.

SUMMARY: This regulation establishes an exemption from the requirement of a tolerance for residues of 2-pyrrolidone, 1-ethenyl-, polymer with ethenol; when used as an inert ingredient in a pesticide formulation. Sekisui Specialty Chemicals America, LLC submitted a petition to EPA under the Federal Food, Drug, and Cosmetic Act (FFDCA), requesting an exemption from the requirement of a tolerance. This regulation eliminates the need to establish a maximum permissible level for residues of 2-pyrrolidone, 1-ethenyl-, polymer with ethenol on food or feed commodities.

DATES: This regulation is effective February 1, 2013. Objections and requests for hearings must be received on or before April 2, 2013, and must be filed in accordance with the instructions provided in 40 CFR part 178 (see also Unit I.C. of the **SUPPLEMENTARY INFORMATION**).

ADDRESSES: The docket for this action, identified by docket identification (ID) number EPA–HQ–OPP–2012–0789, is available at *http://www.regulations.gov* or at the Office of Pesticide Programs Regulatory Public Docket (OPP Docket) in the Environmental Protection Agency Docket Center (EPA/DC), EPA West Bldg., Rm. 3334, 1301 Constitution Ave. NW., Washington, DC 20460–0001. The Public Reading Room is open from 8:30 a.m. to 4:30 p.m., Monday through Friday, excluding legal holidays. The telephone number for the Public Reading Room is (202) 566–1744, and the telephone number for the OPP Docket is (703) 305–5805. Please review the visitor instructions and additional information about the docket available at *http://www.epa.gov/dockets.*

FOR FURTHER INFORMATION CONTACT: David Lieu, Registration Division (7505P), Office of Pesticide Programs, Environmental Protection Agency, 1200 Pennsylvania Ave. NW., Washington, DC 20460–0001; telephone number: (703) 305–0079; email address: *Lieu.David@epa.gov.*

SUPPLEMENTARY INFORMATION:

I. General Information

A. Does this action apply to me?

You may be potentially affected by this action if you are an agricultural producer, food manufacturer, or pesticide manufacturer. The following list of North American Industrial Classification System (NAICS) codes is not intended to be exhaustive, but rather provides a guide to help readers determine whether this document applies to them. Potentially affected entities may include:

- Crop production (NAICS code 111).
- Animal production (NAICS code 112).
- Food manufacturing (NAICS code 311).

• Pesticide manufacturing (NAICS code 32532).

B. How can I get electronic access to other related information?

You may access a frequently updated electronic version of 40 CFR part 180 through the Government Printing Office's e-CFR site at *http://ecfr.gpoaccess.gov/cgi/t/text/text-idx?&c=ecfr&tpl=/ecfrbrowse/Title40/40tab_02.tpl.*

C. Can I file an objection or hearing request?

Under FFDCA section 408(g), 21 U.S.C. 346a, any person may file an objection to any aspect of this regulation and may also request a hearing on those objections. You must file your objection or request a hearing on this regulation in accordance with the instructions provided in 40 CFR part 178. To ensure proper receipt by EPA, you must identify docket ID number EPA–HQ–OPP–2012–0789 in the subject line on the first page of your submission. All objections and requests for a hearing must be in writing, and must be received by the Hearing Clerk on or before April 2, 2013. Addresses for mail and hand delivery of objections and hearing requests are provided in 40 CFR 178.25(b).

In addition to filing an objection or hearing request with the Hearing Clerk as described in 40 CFR part 178, please submit a copy of the filing (excluding any Confidential Business Information (CBI)) for inclusion in the public docket. Information not marked confidential pursuant to 40 CFR part 2 may be disclosed publicly by EPA without prior notice. Submit the non-CBI copy of your objection or hearing request, identified by docket ID number EPA–HQ–OPP–2012–0789, by one of the following methods.

• *Federal eRulemaking Portal: http://www.regulations.gov.* Follow the online instructions for submitting comments. Do not submit electronically any information you consider to be CBI or other information whose disclosure is restricted by statute.

• *Mail:* OPP Docket, Environmental Protection Agency Docket Center (EPA/DC), (28221T), 1200 Pennsylvania Ave., NW., Washington, DC 20460–0001.

• *Hand Delivery:* To make special arrangements for hand delivery or delivery of boxed information, please follow the instructions at *http://www.epa.gov/dockets/contacts.htm.*

Additional instructions on commenting or visiting the docket, along with more information about dockets generally, is available at *http://www.epa.gov/dockets.*

II. Background and Statutory Findings

In the **Federal Register** of December 19, 2012 (77 FR 75082) (FRL–9372–6), EPA issued a document pursuant to FFDCA section 408, 21 U.S.C. 346a, announcing the receipt of a pesticide petition (PP 2E8082) filed by Sekisui Specialty Chemicals America, LLC, 900 Gemini Ave., Suite A, Houston, TX 77058. The petition requested that 40 CFR 180.960 be amended by establishing an exemption from the requirement of a tolerance for residues of 2-pyrrolidone, 1-ethenyl-, polymer with ethenol; CAS no. 26008–54–8. That document included a summary of the petition prepared by the petitioner and solicited comments on the petitioner's request. The Agency did not receive any comments.

Section 408(c)(2)(A)(i) of FFDCA allows EPA to establish an exemption from the requirement for a tolerance (the legal limit for a pesticide chemical residue in or on a food) only if EPA determines that the exemption is ''safe.'' Section 408(c)(2)(A)(ii) of FFDCA defines ''safe'' to mean that ''there is a reasonable certainty that no harm will result from aggregate exposure to the pesticide chemical residue, including all anticipated dietary exposures and all other exposures for which there is reliable information.'' This includes exposure through drinking water and use in residential settings, but does not include occupational exposure. Section 408(b)(2)(C) of FFDCA requires EPA to give special consideration to exposure of infants and children to the pesticide chemical residue in establishing an exemption from the requirement of a tolerance and to ''ensure that there is a reasonable certainty that no harm will result to infants and children from aggregate exposure to the pesticide chemical residue* * *'' and specifies factors EPA is to consider in establishing an exemption.

III. Risk Assessment and Statutory Findings

EPA establishes exemptions from the requirement of a tolerance only in those cases where it can be shown that the risks from aggregate exposure to pesticide chemical residues under reasonably foreseeable circumstances will pose no appreciable risks to human health. In order to determine the risks from aggregate exposure to pesticide inert ingredients, the Agency considers the toxicity of the inert in conjunction with possible exposure to residues of the inert ingredient through food, drinking water, and through other exposures that occur as a result of pesticide use in residential settings. If EPA is able to determine that a finite tolerance is not necessary to ensure that there is a reasonable certainty that no harm will result from aggregate exposure to the inert ingredient, an exemption from the requirement of a tolerance may be established.

Consistent with FFDCA section 408(b)(2)(D), EPA has reviewed the available scientific data and other relevant information in support of this action and considered its validity, completeness and reliability and the relationship of this information to human risk. EPA has also considered available information concerning the variability of the sensitivities of major identifiable subgroups of consumers, including infants and children. In the case of certain chemical substances that are defined as polymers, the Agency has established a set of criteria to identify categories of polymers expected to present minimal or no risk. The definition of a polymer is given in 40 CFR 723.250(b) and the exclusion criteria for identifying these low-risk polymers are described in 40 CFR 723.250(d). 2-Pyrrolidone, 1-ethenyl-, polymer with ethenol conforms to the definition of a polymer given in 40 CFR 723.250(b) and meets the following criteria that are used to identify low-risk polymers.

1. The polymer is not a cationic polymer nor is it reasonably anticipated to become a cationic polymer in a natural aquatic environment.

2. The polymer does contain as an integral part of its composition the atomic elements carbon, hydrogen, and oxygen.

3. The polymer does not contain as an integral part of its composition, except as impurities, any element other than those listed in 40 CFR 723.250(d)(2)(ii).

4. The polymer is neither designed nor can it be reasonably anticipated to substantially degrade, decompose, or depolymerize.

5. The polymer is manufactured or imported from monomers and/or reactants that are already included on the TSCA Chemical Substance Inventory or manufactured under an applicable TSCA section 5 exemption.

6. The polymer is not a water absorbing polymer with a number average molecular weight (MW) greater than or equal to 10,000 daltons.

Additionally, the polymer also meets as required the following exemption criteria specified in 40 CFR 723.250(e).

7. The polymer's number average MW of 23,000 is greater than or equal to 10,000 daltons. The polymer contains less than 2% oligomeric material below MW 500 and less than 5% oligomeric material below MW 1,000.

Thus, 2-pyrrolidone, 1-ethenyl-, polymer with ethenol meets the criteria for a polymer to be considered low risk under 40 CFR 723.250. Based on its conformance to the criteria in this unit, no mammalian toxicity is anticipated from dietary, inhalation, or dermal exposure to 2-pyrrolidone, 1-ethenyl-, polymer with ethenol.

IV. Aggregate Exposures

For the purposes of assessing potential exposure under this exemption, EPA considered that 2-pyrrolidone, 1-ethenyl-, polymer with ethenol could be present in all raw and processed agricultural commodities and drinking water, and that non-occupational non-dietary exposure was possible. The number average MW of 2-pyrrolidone, 1-ethenyl-, polymer with ethenol is 23,000 daltons. Generally, a polymer of this size would be poorly absorbed through the intact gastrointestinal tract or through intact human skin. Since 2-pyrrolidone, 1-ethenyl-, polymer with ethenol conforms to the criteria that identify a low-risk polymer, there are no concerns for risks associated with any potential exposure scenarios that are reasonably foreseeable. The Agency has determined that a tolerance is not necessary to protect the public health.

V. Cumulative Effects From Substances With a Common Mechanism of Toxicity

Section 408(b)(2)(D)(v) of FFDCA requires that, when considering whether to establish, modify, or revoke a tolerance, the Agency consider ''available information'' concerning the cumulative effects of a particular pesticide's residues and ''other substances that have a common mechanism of toxicity.''

EPA has not found 2-pyrrolidone, 1-ethenyl-, polymer with ethenol to share a common mechanism of toxicity with any other substances, and 2-pyrrolidone, 1-ethenyl-, polymer with ethenol does not appear to produce a toxic metabolite produced by other substances. For the purposes of this tolerance action, therefore, EPA has assumed that 2-pyrrolidone, 1-ethenyl-, polymer with ethenol does not have a common mechanism of toxicity with other substances. For information regarding EPA's efforts to determine which chemicals have a common mechanism of toxicity and to evaluate the cumulative effects of such chemicals, see EPA's Web site at *http://www.epa.gov/pesticides/cumulative.*

VI. Additional Safety Factor for the Protection of Infants and Children

Section 408(b)(2)(C) of FFDCA provides that EPA shall apply an additional tenfold margin of safety for infants and children in the case of threshold effects to account for prenatal and postnatal toxicity and the completeness of the data base unless EPA concludes that a different margin of safety will be safe for infants and children. Due to the expected low toxicity of 2-pyrrolidone, 1-ethenyl-, polymer with ethenol, EPA has not used a safety factor analysis to assess the risk. For the same reasons the additional tenfold safety factor is unnecessary.

VII. Determination of Safety

Based on the conformance to the criteria used to identify a low-risk polymer, EPA concludes that there is a reasonable certainty of no harm to the U.S. population, including infants and children, from aggregate exposure to residues of 2-pyrrolidone, 1-ethenyl-, polymer with ethenol.

VIII. Other Considerations

A. Existing Exemptions From a Tolerance

None.

B. Analytical Enforcement Methodology

An analytical method is not required for enforcement purposes since the Agency is establishing an exemption from the requirement of a tolerance without any numerical limitation.

C. International Residue Limits

In making its tolerance decisions, EPA seeks to harmonize U.S. tolerances with international standards whenever possible, consistent with U.S. food safety standards and agricultural practices. EPA considers the international maximum residue limits (MRLs) established by the Codex Alimentarius Commission (Codex), as required by FFDCA section 408(b)(4). The Codex Alimentarius is a joint United Nations Food and Agriculture Organization/World Health Organization food standards program, and it is recognized as an international food safety standards-setting organization in trade agreements to which the United States is a party. EPA may establish a tolerance that is different from a Codex MRL; however, FFDCA section 408(b)(4) requires that EPA explain the reasons for departing from the Codex level.

The Codex has not established a MRL for 2-pyrrolidone, 1-ethenyl-, polymer with ethenol.

IX. Conclusion

Accordingly, EPA finds that exempting residues of 2-pyrrolidone, 1-ethenyl-, polymer with ethenol from the requirement of a tolerance will be safe.

X. Statutory and Executive Order Reviews

This final rule establishes a tolerance under FFDCA section 408(d) in response to a petition submitted to the Agency. The Office of Management and Budget (OMB) has exempted these rules from review under Executive Order 12866, entitled ''Regulatory Planning and Review'' (58 FR 51735, October 4, 1993). Because this final rule has been exempted from review under Executive Order 12866, this final rule is not subject to Executive Order 13211, entitled ''Actions Concerning Regulations That Significantly Affect Energy Supply, Distribution, or Use'' (66 FR 28355, May 22, 2001) or Executive Order 13045, entitled ''Protection of Children from Environmental Health Risks and Safety Risks'' (62 FR 19885, April 23, 1997). This final rule does not contain any information collections subject to OMB approval under the Paperwork Reduction Act (PRA) (44 U.S.C. 3501 *et seq.*), nor does it involve any technical standards that would require Agency consideration of voluntary consensus standards pursuant to section 12(d) of the National Technology Transfer and Advancement Act of 1995 (NTTAA) (15 U.S.C. 272 note).

Since tolerances and exemptions that are established on the basis of a petition under FFDCA section 408(d), such as the tolerance in this final rule, do not require the issuance of a proposed rule, the requirements of the Regulatory Flexibility Act (RFA) (5 U.S.C. 601 *et seq.*), do not apply.

This final rule directly regulates growers, food processors, food handlers, and food retailers, not States or tribes, nor does this action alter the relationships or distribution of power and responsibilities established by Congress in the preemption provisions of FFDCA section 408(n)(4). As such, the Agency has determined that this action will not have a substantial direct effect on States or tribal governments, on the relationship between the national government and the States or tribal governments, or on the distribution of power and responsibilities among the various levels of government or between the Federal Government and Indian tribes, or otherwise have any unique impacts on local governments. Thus, the Agency has determined that Executive Order 13132, entitled ''Federalism'' (64

FR 43255, August 10, 1999) and Executive Order 13175, entitled ''Consultation and Coordination with Indian Tribal Governments'' (65 FR 67249, November 9, 2000) do not apply to this final rule. In addition, this final rule does not impose any enforceable duty or contain any unfunded mandate as described under Title II of the Unfunded Mandates Reform Act of 1995 (UMRA) (2 U.S.C. 1501 *et seq.*).

Although this action does not require any special considerations under Executive Order 12898, entitled ''Federal Actions to Address Environmental Justice in Minority Populations and Low-Income Populations'' (59 FR 7629, February 16, 1994), EPA seeks to achieve environmental justice, the fair treatment and meaningful involvement of any group, including minority and/or low-income populations, in the development, implementation, and enforcement of environmental laws, regulations, and policies. As such, to the extent that information is publicly available or was submitted in comments to EPA, the Agency considered whether groups or segments of the population, as a result of their location, cultural practices, or other factors, may have atypical or disproportionately high and adverse human health impacts or environmental effects from exposure to the pesticide discussed in this document, compared to the general population.

XI. Congressional Review Act

Pursuant to the Congressional Review Act (5 U.S.C. 801 *et seq.*), EPA will submit a report containing this rule and other required information to the U.S. Senate, the U.S. House of Representatives, and the Comptroller General of the United States prior to publication of the rule in the **Federal Register**. This action is not a ''major rule'' as defined by 5 U.S.C. 804(2).

List of Subjects in 40 CFR Part 180

Environmental protection, Administrative practice and procedure, Agricultural commodities, Pesticides and pests, Reporting and recordkeeping requirements.

Dated: January 23, 2013.

Lois Rossi,

Director, Registration Division, Office of Pesticide Programs.

Therefore, 40 CFR chapter I is amended as follows:

PART 180—[AMENDED]

■ 1. The authority citation for part 180 continues to read as follows:

Authority: 21 U.S.C. 321(q), 346a and 371.

■ 2. In § 180.960, alphabetically add the following polymer to the table to read as follows:

§ 180.960 Polymers; exemptions from the requirement of a tolerance.

* * * * *

Polymer	CAS No.
* * * * *	
2-Pyrrolidone, 1-ethenyl-, polymer with ethenol, minimum number average molecular weight (in amu), 23,000	26008–54–8
* * * * *	

[FR Doc. 2013–02212 Filed 1–31–13; 8:45 am]

BILLING CODE 6560–50–P

FEDERAL COMMUNICATIONS COMMISSION

47 CFR Part 101

[WT Docket No. 10–153; FCC 12–87]

Facilitating the use of Microwave for Wireless Backhaul and Other Uses and Providing Additional Flexibility to Broadcast Auxiliary Service and Operational Fixed Microwave Licensees

AGENCY: Federal Communications Commission.

ACTION: Final rule; announcement of effective date.

SUMMARY: In this document, the Commission announces that the Office of Management and Budget (OMB) has approved, for a period of three years, the information collection associated with the Commission's Wireless Backhaul Second Report and Order (*R&O*), Facilitating the Use of Microwave for Wireless Backhaul and Other Uses and Providing Additional Flexibility to Broadcast Auxiliary Service and Operational Fixed Microwave Licensees.

This notice is consistent with the *R&O,* which stated that the Commission would publish a document in the **Federal Register** announcing the effective date of the Rural Microwave Flexibility Policy.

DATES: The Rural Microwave Flexibility Policy was adopted on August 3, 2012, in FCC 12–87, published in the **Federal Register** at 77 FR 54421, September 5, 2012, and effective on January 7, 2013.

FOR FURTHER INFORMATION CONTACT: John J. Schauble, Deputy Chief, Broadband Division, Wireless Telecommunications Bureau at (202) 418–0797 or via the Internet at *John.Schauble@fcc.gov.*

SUPPLEMENTARY INFORMATION: This document announces that, on January 7, 2013, OMB approved, for a period of three years, the information collection requirements contained in the Commission's *R&O,* FCC 12–87, published at 77 FR 54421 (September 5, 2012). The OMB Control Number is 3060–0718. The Commission publishes this notice as an announcement of the effective date of the Rural Microwave Flexibility Policy. If you have any comments on the burden estimates listed below, or how the Commission can improve the collections and reduce any burdens caused thereby, please contact Judith B. Herman at (202) 418–0214 or via the Internet at *Judith-B.Herman@fcc.gov.*

Please include the OMB Control Number, 3060–0718, in your correspondence. The Commission will also accept your comments via email at *PRA@fcc.gov.*

To request materials in accessible formats for people with disabilities (Braille, large print, electronic files, audio format), send an email to *fcc504@fcc.gov* or call the Consumer and Governmental Affairs Bureau at (202) 418–0530 (voice), (202) 418–0432 (TTY).

Synopsis

As required by the Paperwork Reduction Act of 1995 (44 U.S.C. 3507), the FCC is notifying the public that it received OMB approval on January 7, 2013, which contained new or modified information collection requirements for Fixed Service (FS) operators to comply with the Rural Microwave Flexibility Policy adopted in the Wireless *Backhaul Second Report and Order,* directing the Commission's Wireless Telecommunications Bureau to favorably consider waivers of the payload capacity requirements if FS applicants demonstrate compliance with certain criteria, and that the Rural Microwave Flexibility Policy would not be effective until approved by the Office of Management and Budget. The information collection was adopted in the Report and Order in WT Docket No. 10–153 which appears at 77 FR 54421 (September 5, 2012). The effective date of the rules adopted in that Report and Order was published as October 5, 2012, except for the Rural Microwave Flexibility Policy. Through this document, the Commission announces that it has received this approval (OMB Control No. 3060–0718, Expiration Date: January 31, 2016) and that the Rural Microwave Flexibility Policy became effective on January 7, 2013.

Under 5 CFR part 1320, an agency may not conduct or sponsor a collection of information unless it displays a current, valid OMB Control Number. No person shall be subject to any penalty for failing to comply with a collection of information subject to the Paperwork Reduction Act that does not display a current, valid OMB Control Number. The OMB Control Number is 3060–0718. The foregoing notice is required by the Paperwork Reduction Act of 1995, Public Law 104–13, October 1, 1995, and 44 U.S.C. 3507.

The total annual reporting burdens and costs for the respondents are as follows:

OMB Control Number: 3060–0718.

OMB Approval Date: January 7, 2013.

OMB Expiration Date: January 31, 2016.

Title: Part 101 Rule Sections Governing the Terrestrial Microwave Fixed Radio Service

Form Number: N/A.

Respondents: Business or other for-profit entities, not-for-profit institutions, federal government and state, local, or tribal government.

Number of Respondents: 27,342 respondents; 27,342 responses.

Estimated Time per Response: 1.2962475 hours.

Frequency of Response: On occasion and 10 year reporting requirements, third party disclosure requirements and recordkeeping requirements.

Obligation to Respond: Required to obtain or retain benefits or retain benefits. Statutory authority for this information collection is contained in 47 U.S.C. 151, 154(i), 301, 303(f), 303(g), 303(r), 307, 308, 309, 310 and 316 of the Communications Act of 1934, as amended.

Total Annual Burden: 35,442 hours.

Total Annual Cost: $810,000.

Nature and Extent of Confidentiality: No questions of a confidential nature are asked.

Needs and Uses: On August 3, 2012, the Commission adopted the Rural Microwave Flexibility Policy, which directed the Wireless Telecommunications Bureau to favorably consider waivers of the requirements for payload capacity of equipment, if the applicants demonstrate equipment compliance with the following criteria:

○ The interference environment would allow the applicant to use a less stringent Category B antenna (although the applicant could choose to use a higher performance Category A antenna);

○ The applicant specifically acknowledges its duty to upgrade to a Category A antenna and come into compliance with the applicable efficiency standard if necessary to resolve an interference conflict with a current or future microwave link pursuant to § 101.115(c);

○ The applicant uses equipment that is capable of readily being upgraded to comply with the applicable payload capacity requirement, and provide a certification in its application that its equipment complies with this requirement;

○ Each end of the link is located in a rural area (county or equivalent having population density of 100 persons per square mile or less);

○ Each end of the link is in a county with a low density of links in the 4, 6, 11, 18, and 23 GHz bands;

○ Neither end of the link is contained within a recognized antenna farm; and

○ The applicant describes its proposed service and explains how relief from the efficiency standards will facilitate providing that service (*e.g.,* by eliminating the need for an intermediate hop) as well as the steps needed to come into compliance should an interference conflict emerge.

These requirements are necessary for the Commission staff to carry out its duties to determine whether applicants would be eligible for a waiver of the payload capacity requirements. In addition, the information is used to determine whether the public interest, convenience, and necessity are being served as required by 47 U.S.C. 309. Without this information, the Commission would not be able to carry out its statutory responsibilities.

Federal Communications Commission.

Marlene H. Dortch,

Secretary.

[FR Doc. 2013–02221 Filed 1–31–13; 8:45 am]

BILLING CODE 6712–01–P

DEPARTMENT OF COMMERCE

National Oceanic and Atmospheric Administration

50 CFR Part 622

[Docket No. 001206604–1758–02]

RIN 0648–XC474

Fisheries of the Caribbean, Gulf of Mexico, and South Atlantic; Coastal Migratory Pelagic Resources of the Gulf of Mexico and South Atlantic; Trip Limit Increase

AGENCY: National Marine Fisheries Service (NMFS), National Oceanic and Atmospheric Administration (NOAA), Commerce.

ACTION: Temporary rule; inseason trip limit increase.

SUMMARY: NMFS increases the trip limit in the commercial sector for king mackerel in the Florida east coast subzone to 75 fish per day in or from the exclusive economic zone (EEZ). This trip limit increase is necessary to maximize the socioeconomic benefits of the quota.

DATES: This rule is effective 12:01 a.m., local time, February 1, 2013, through March 31, 2013, unless changed by further notification in the **Federal Register**.

FOR FURTHER INFORMATION CONTACT: Susan Gerhart, telephone: 727–824–5305, fax: 727–824–5308, email: *Susan.Gerhart@noaa.gov.*

SUPPLEMENTARY INFORMATION: The fishery for coastal migratory pelagic fish (king mackerel, Spanish mackerel, and cobia) is managed under the Fishery Management Plan for the Coastal Migratory Pelagic Resources of the Gulf of Mexico and South Atlantic (FMP). The FMP was prepared by the Gulf of Mexico and South Atlantic Fishery Management Councils (Councils) and is implemented under the authority of the Magnuson-Stevens Fishery Conservation and Management Act (Magnuson-Stevens Act) by regulations at 50 CFR part 622.

On January 30, 2012 (76 FR 82058, December 29, 2011), NMFS implemented a commercial quota of 1,215,228 lb (551,218 kg) for Gulf migratory group king mackerel in the Florida east coast subzone of the eastern zone (50 CFR 622.42(c)(1)(i)(A)(*1*)), for the current fishing year, July 1, 2012, through June 30, 2013. From November 1 through March 31 annually, the Florida east coast subzone of the Gulf group king mackerel is that part of the eastern zone north of 25°20.4′ N. lat. (a line directly east from the Miami-Dade/Monroe County, FL, boundary).

In accordance with 50 CFR 622.44(a)(2)(i)(B)(*2*), beginning on February 1, if less than 75 percent of the Florida east coast subzone king mackerel commercial quota has been harvested by that date, king mackerel in or from that subzone may be possessed on board or landed from a permitted vessel in amounts not exceeding 75 fish per day. NMFS has determined that 75 percent of the quota for Gulf group king mackerel in the Florida east coast subzone will not be reached before February 1, 2013. Accordingly, a 75-fish trip limit applies to vessels fishing for king mackerel in or from the EEZ in the Florida east coast subzone effective 12:01 a.m., local time, February 1, 2013.

The 75-fish trip limit will remain in effect until the subzone closes or until the end of the current fishing year (March 31, 2013) for this subzone.

Classification

The Regional Administrator, Southeast Region, NMFS, has determined this temporary rule is necessary for the conservation and management of Gulf group king mackerel and is consistent with the Magnuson-Stevens Act and other applicable laws.

This action is taken under 50 CFR 622.43(a) and is exempt from review under Executive Order 12866.

These measures are exempt from the procedures of the Regulatory Flexibility Act because the temporary rule is issued without opportunity for prior notice and comment.

This action responds to the best available information recently obtained from the fishery. The Assistant Administrator for Fisheries, NOAA, (AA) finds good cause to waive the requirement to provide prior notice and opportunity for public comment pursuant to the authority set forth in 5 U.S.C. 553(b)(B), as such prior notice and opportunity for public comment is unnecessary and contrary to the public interest. Such procedures are unnecessary because the rule itself already has been subject to notice and comment, and all that remains is to notify the public of the trip limit increase. Allowing prior notice and opportunity for public comment for this trip limit increase is contrary to the public interest because it requires time, thus delaying fishermen's ability to catch more king mackerel than the present trip limit allows and preventing fishermen from reaping the socioeconomic benefits derived from this increase in daily catch.

As this action allows fishermen to increase their harvest of king mackerel from 50 fish to 75 fish per day in or from the EEZ of the Florida east coast subzone, the AA finds it relieves a restriction and may go into effect without a 30-day delay in effectiveness, pursuant to 5 U.S.C. 553(d)(1).

Authority: 16 U.S.C. 1801 *et seq.*

Dated: January 29, 2013.

Kara Meckley,

Acting Deputy Director, Office of Sustainable Fisheries, National Marine Fisheries Service.

[FR Doc. 2013–02192 Filed 1–29–13; 4:15 pm]

BILLING CODE 3510–22–P

DEPARTMENT OF COMMERCE

National Oceanic and Atmospheric Administration

50 CFR Part 679

[Docket No. 111213751–2102–02]

RIN 0648–XC465

Fisheries of the Exclusive Economic Zone Off Alaska; Pacific Cod by Catcher/Processors Using Pot Gear in the Bering Sea and Aleutian Islands Management Area

AGENCY: National Marine Fisheries Service (NMFS), National Oceanic and Atmospheric Administration (NOAA), Commerce.

ACTION: Temporary rule; closure.

SUMMARY: NMFS is prohibiting directed fishing for Pacific cod by pot catcher/processors in the Bering Sea and Aleutian Islands management area (BSAI). This action is necessary to prevent exceeding the A season apportionment of the 2013 Pacific cod total allowable catch (TAC) specified for pot catcher/processors in the BSAI.

DATES: Effective 1200 hrs, Alaska local time (A.l.t.), January 28, 2013, through 1200 hrs, A.l.t., September 1, 2013.

FOR FURTHER INFORMATION CONTACT: Obren Davis, 907–586–7228.

SUPPLEMENTARY INFORMATION: NMFS manages the groundfish fishery in the BSAI exclusive economic zone according to the Fishery Management Plan for Groundfish of the Bering Sea and Aleutian Islands Management Area (FMP) prepared by the North Pacific Fishery Management Council under authority of the Magnuson-Stevens Fishery Conservation and Management Act. Regulations governing fishing by U.S. vessels in accordance with the FMP appear at subpart H of 50 CFR part 600 and 50 CFR part 679.

The A season apportionment of the 2013 Pacific cod TAC allocated as a directed fishing allowance to pot catcher/processors in the BSAI is 1,770 metric tons as established by the final 2012 and 2013 harvest specifications for groundfish in the BSAI (77 FR 10669, February 23, 2012) and inseason adjustment (78 FR 270, January 3, 2013).

In accordance with § 679.20(d)(1)(iii), the Administrator, Alaska Region, NMFS, has determined that the A season apportionment of the 2013 Pacific cod TAC allocated as a directed fishing allowance to pot catcher/processors in the BSAI has been reached. Consequently, NMFS is prohibiting directed fishing for Pacific cod by pot catcher/processors in the BSAI.

After the effective date of this closure the maximum retainable amounts at § 679.20(e) and (f) apply at any time during a trip.

Classification

This action responds to the best available information recently obtained from the fishery. The Assistant Administrator for Fisheries, NOAA (AA), finds good cause to waive the requirement to provide prior notice and opportunity for public comment pursuant to the authority set forth at 5 U.S.C. 553(b)(B) and § 679.25(c)(1)(ii) as such requirement is impracticable and contrary to the public interest. This requirement is impracticable and contrary to the public interest as it would prevent NMFS from responding to the most recent fisheries data in a timely fashion and would delay the directed fishing closure of Pacific cod by pot catcher/processors in the BSAI. NMFS was unable to publish a notice providing time for public comment because the most recent, relevant data only became available as of January 25, 2013.

The AA also finds good cause to waive the 30-day delay in the effective date of this action under 5 U.S.C. 553(d)(3). This finding is based upon the reasons provided above for waiver of prior notice and opportunity for public comment.

This action is required by § 679.20 and is exempt from review under Executive Order 12866.

Authority: 16 U.S.C. 1801 *et seq.*

Dated: January 28, 2013.

James P. Burgess,

Acting Deputy Director, Office of Sustainable Fisheries, National Marine Fisheries Service.

[FR Doc. 2013–02117 Filed 1–28–13; 4:15 pm]

BILLING CODE 3510–22–P

DEPARTMENT OF COMMERCE

National Oceanic and Atmospheric Administration

50 CFR Part 679

[Docket No. 111207737–2141–02]

RIN 0648–XC466

Fisheries of the Exclusive Economic Zone Off Alaska; Pacific Cod by Vessels Using Pot Gear in the Western Regulatory Area of the Gulf of Alaska

AGENCY: National Marine Fisheries Service (NMFS), National Oceanic and Atmospheric Administration (NOAA), Commerce.

ACTION: Temporary rule; closure.

SUMMARY: NMFS is prohibiting directed fishing for Pacific cod by vessels using pot gear in the Western Regulatory Area of the Gulf of Alaska (GOA). This action is necessary to prevent exceeding the A season allowance of the 2013 Pacific cod total allowable catch apportioned to vessels using pot gear in the Western Regulatory Area of the GOA.

DATES: Effective 1200 hrs, Alaska local time (A.l.t.), January 28, 2013, through 1200 hrs, A.l.t., September 1, 2013.

FOR FURTHER INFORMATION CONTACT: Obren Davis, 907–586–7228.

SUPPLEMENTARY INFORMATION: NMFS manages the groundfish fishery in the GOA exclusive economic zone according to the Fishery Management Plan for Groundfish of the Gulf of Alaska (FMP) prepared by the North Pacific Fishery Management Council under authority of the Magnuson-Stevens Fishery Conservation and Management Act. Regulations governing fishing by U.S. vessels in accordance with the FMP appear at subpart H of 50 CFR part 600 and 50 CFR part 679. Regulations governing sideboard protections for GOA groundfish fisheries appear at subpart B of 50 CFR part 680.

The A season allowance of the 2013 Pacific cod total allowable catch (TAC) apportioned to vessels using pot gear in the Western Regulatory Area of the GOA is 4,137 metric tons (mt), as established by the final 2012 and 2013 harvest specifications for groundfish of the GOA (77 FR 15194, March 14, 2012) and inseason adjustment to the final 2013 harvest specifications for Pacific cod (78 FR 267, January 3, 2013).

In accordance with § 679.20(d)(1)(i), the Administrator, Alaska Region, NMFS (Regional Administrator) has determined that the A season allowance of the 2013 Pacific cod TAC apportioned to vessels using pot gear in the Western Regulatory Area of the GOA will soon be reached. Therefore, the Regional Administrator is establishing a directed fishing allowance of 4,127 mt and is setting aside the remaining 10 mt as bycatch to support other anticipated groundfish fisheries. In accordance with § 679.20(d)(1)(iii), the Regional Administrator finds that this directed fishing allowance has been reached. Consequently, NMFS is prohibiting directed fishing for Pacific cod by vessels using pot gear in the Western Regulatory Area of the GOA. After the effective date of this closure the maximum retainable amounts at § 679.20(e) and (f) apply at any time during a trip.

Classification

This action responds to the best available information recently obtained from the fishery. The Assistant Administrator for Fisheries, NOAA (AA), finds good cause to waive the requirement to provide prior notice and opportunity for public comment pursuant to the authority set forth at 5 U.S.C. 553(b)(B) as such requirement is impracticable and contrary to the public interest. This requirement is impracticable and contrary to the public interest as it would prevent NMFS from responding to the most recent fisheries data in a timely fashion and would delay the directed fishing closure of Pacific cod for vessels using pot gear in the Western Regulatory Area of the GOA. NMFS was unable to publish a notice providing time for public comment because the most recent, relevant data only became available as of January 25, 2013.

The AA also finds good cause to waive the 30-day delay in the effective date of this action under 5 U.S.C. 553(d)(3). This finding is based upon the reasons provided above for waiver of prior notice and opportunity for public comment.

This action is required by § 679.20 and is exempt from review under Executive Order 12866.

Authority: 16 U.S.C. 1801 *et seq.*

Dated: January 28, 2013.

James P. Burgess,

Acting Deputy Director, Office of Sustainable Fisheries, National Marine Fisheries Service.

[FR Doc. 2013–02120 Filed 1–28–13; 4:15 pm]

BILLING CODE 3510–22–P

Proposed Rules

Federal Register
Vol. 78, No. 22
Friday, February 1, 2013

This section of the FEDERAL REGISTER contains notices to the public of the proposed issuance of rules and regulations. The purpose of these notices is to give interested persons an opportunity to participate in the rule making prior to the adoption of the final rules.

OFFICE OF MANAGEMENT AND BUDGET

2 CFR Chapters I and II

Reform of Federal Policies Relating to Grants and Cooperative Agreements; Cost Principles and Administrative Requirements (Including Single Audit Act)

AGENCY: Executive Office of the President, Office of Management and Budget (OMB).

ACTION: Proposed Guidance.

SUMMARY: To deliver on President Obama's promise of a 21st-Century government that is more efficient, transparent, and creative, the Office of Management and Budget (OMB) is seeking to adjust the Federal government's partnership with non-Federal stakeholders to best achieve program outcomes while we ensure the financial integrity of the dollars we spend. The goal of this effort is to transform our Federal financial assistance framework so that it meets a higher standard of performance on behalf of the American people.

OMB proposes these reforms to the guidance for Federal policies relating to grants in order to ensure that Federal grants meet the high standards of a 21st-Century government. Federal grant-making must be streamlined to make the most of taxpayer dollars and ensure financial integrity while delivering the right program outcomes. This proposal provides this opportunity for the Federal government and its partners: state, local, tribal governments, institutions of higher education, and nonprofit organizations, to rethink and reform the rules that govern our stewardship of Federal dollars.

DATES: To be assured of consideration, comments must be received by OMB electronically through *www.regulations.gov* no later than midnight Eastern Standard Time (E.S.T.) on May 2, 2013.

ADDRESSES: Comments on this proposal must be submitted electronically at *www.regulations.gov.* In submitting comments, please search for recent submissions by OMB to find docket OMB–2013–0001, which includes the full text of this proposal, and submit comments there.

Comments will be most useful if they are presented in the same sequence and with the same section number as the section of this guidance to which they apply. Please also provide any information regarding the cost implications of any particular proposal. If you are submitting comments on behalf of an organization, please identify the organization, and if that organization represents a number of entities, please note the number of entities who endorse the organization's comments. Finally, the public comments received by OMB will be posted at *http://www.regulations.gov* (follow the search instructions on that Web site to view public comments). Accordingly, please do not include in your comments any confidential business information or information of a personal-privacy nature.

To View This Proposal: The complete text of this proposal and a crosswalk of policy changes from the existing guidance are available on the OMB Web site at *http://www.whitehouse.gov/omb/grants_docs* under ''Proposed Policies'' and will also be available on *www.regulations.gov* by searching for docket number OMB–2013–0001, or, in hard copy, by contacting Victoria Collin of OMB at (202) 395–7791. Copies of the OMB Circulars that are discussed in this notice are available on OMB's Web site at *http://www.whitehouse.gov/omb/circulars_default/.*

FOR FURTHER INFORMATION CONTACT: For general information, please contact Victoria Collin at (202) 395–7791. OMB will host an informational Web cast with the Council on Financial Assistance Reform and key stakeholders on Friday February 8th, 2013 at 11:00 a.m. EST available at *www.cfoc.gov.* More information on the Council on Financial Assistance Reform is available at *www.cfo.gov/cofar.*

SUPPLEMENTARY INFORMATION: With this proposal, OMB seeks to ensure the highest integrity in the financial management and operation of Federal programs and to strengthen accountability for Federal dollars by improving policies that protect against waste, fraud, and abuse. At the same time, OMB aims to increase the impact and accessibility of programs by minimizing time spent complying with unnecessarily burdensome administrative requirements, and so to re-orient recipients toward achieving program objectives. Through close and sustained collaboration with Federal and non-Federal partners, OMB has developed ideas articulated in this proposal that would ensure that grants are awarded based on merit; that management increases focus on performance outcomes; and that rules governing the allocation of Federal fund are streamlined, and better focus the Single Audit oversight tool to reduce waste, fraud, and abuse.

This proposal—the complete text of which is available online, or in hard copy by telephone request (see *To View This Proposal* section)—follows the February 28, 2012 Advance Notice of Proposed Guidance (ANPG) published in the **Federal Register**. Both that notice and this proposal were developed in response to the November 23, 2009 Executive Order 13520 on *Reducing Improper Payments* and his February 28, 2011 Presidential Memorandum on *Administrative Flexibility, Lower Costs, and Better Results for State, Local, and Tribal Governments.* In those documents, the President directed OMB to work with Executive Branch agencies; state, local, and tribal governments; and other key stakeholders to evaluate potential reforms to Federal grants policies. The ANPG built on the work of those collaborations and discussed initial ideas to meet those goals. OMB received over 350 responses to the notice from across the spectrum of stakeholders in the grants community. The notice and comments received in response are available to the public at *www.Regulations.gov* under docket number OMB–2012–0002.

This proposal was developed after considering the comments received in response to the ANPG. This preamble outlines the broad themes of stakeholder feedback received and how that feedback influenced further development of ideas mentioned in the ANPG into this proposal. With this publication, the public is once again invited to comment on the proposed reforms. Comments received in response to this proposal will be used to further refine the reforms discussed prior to the issuance of new guidance.

This proposed guidance would supersede and streamline requirements from OMB Circulars A–21, A–87, A–110, and A–122 (which have been placed in 2 CFR Parts 220, 225, 215, and 230); Circulars A–89, A–102, and A–133; the guidance in Circular A–50 on Single Audit Act follow-up; and pending further review, the Cost Principles for Hospitals at 45 CFR Part 74, Appendix E. The proposal consolidates the guidance previously contained in the aforementioned citations into a streamlined and consolidated format that aims to improve both the clarity and accessibility of the guidance. If and when this proposal is finalized, OMB will integrate this guidance into Title 2 of the Code of Federal Regulations.

Similar to existing guidance that this proposal would supersede, the new guidance would be applicable to grants and cooperative agreements that involve state, local, and tribal governments as well as institutions of higher education, and nonprofit organizations. Parts of it may also apply to for-profit entities in limited circumstances as described in section .101 Applicability and the Federal Acquisition Regulation. Single Audit Act requirements will continue to apply to all Federal awards, including contracts, though cost-reimbursement contracts may continue to be subject to additional audit requirements. This guidance does not supersede any existing authority under law or by Executive Order or the Federal Acquisition Regulation.

I. Objectives and Background

A. Objectives

OMB is proposing new streamlined guidance for grants in order to meet the standards of a high-performing 21st-Century government. Only by streamlining this guidance can we increase the efficiency and effectiveness of the Federal grant-making process to ensure best use of the more than $500 billion in Federal funds that are spent through grants.

As the President articulated in Executive Order 13563 of January 18, 2011, on *Improving Regulation and Regulatory Review* (76 FR 3821; January 21, 2011; *http://www.gpo.gov/fdsys/pkg/FR-2011-01-21/pdf/2011-1385.pdf*), each Federal agency must ''tailor its regulations to impose the least burden on society, consistent with regulatory objectives, taking into account, among other things, and to the extent practicable, the costs of cumulative regulations.'' To that end, it is important that Federal agencies identify those ''rules that may be outmoded, ineffective, insufficient, or excessively burdensome,'' and ''modify, streamline, expand, or repeal them in accordance with what has been learned.'' The President reinforced his commitment in Executive Order 13579 of July 11, 2011 on *Regulation and Independent Regulatory Agencies* (76 FR 41587; July 14, 2011; *http://www.gpo.gov/fdsys/pkg/FR-2011-07-14/pdf/2011-17953.pdf*).

As in other areas involving Federal requirements, the President is committed to making government more accountable to the American people while eliminating requirements that are unnecessary and reforming those requirements that are overly burdensome. Eliminating unnecessary requirements for financial assistance will allow recipients of Federal awards to re-orient efforts spent on compliance with complex requirements towards achievement of programmatic objectives. As part of this commitment, the President believes that the Federal government has an obligation to eliminate roadblocks to effective performance in carrying out and completing grants and cooperative agreements. Essential to this reform effort is reducing ''red tape'' that is attached to the financial assistance the Federal government provides annually in the form of grants and cooperative agreements. These awards provide important benefits and services to the public, and most of the awards go to state, local and tribal governments as well as to institutions of higher education, hospitals, and non-profit organizations. In order to ensure that the public receives the most value, it is essential that these programs function as effectively and efficiently as possible, and that there is a high level of accountability to prevent waste, fraud, and abuse.

To this end, the President on February 28, 2011, issued his Memorandum on *Administrative Flexibility, Lower Costs, and Better Results for State, Local, and Tribal Governments,* (Daily Comp. Pres. Docs.; *http://www.gpo.gov/fdsys/pkg/DCPD-201100123/pdf/DCPD-201100123.pdf*). In the Memorandum, the President explained that ''Federal program requirements over the past several decades have sometimes been onerous, and they have not always contributed to better outcomes. With input from our state, local, and tribal partners, we can, consistent with law, reduce unnecessary regulatory and administrative burdens and redirect resources to services that are essential to achieving better outcomes at lower cost.'' In addition to other actions, the President instructed the OMB Director to ''review and where appropriate revise guidance concerning cost principles, burden minimizations, and audits for state, local, and tribal governments in order to eliminate, to the extent permitted by law, unnecessary, unduly burdensome, duplicative, or low-priority recordkeeping requirements and effectively tie such requirements to achievement of outcomes.'' OMB has endeavored to deliver on that mission with this proposal.

Equally as essential to a 21st-Century government as removing unnecessary and overly burdensome requirements that interfere with efficient and effective program performance is strengthening accountability by ''intensifying efforts to eliminate payment error, waste, fraud, and abuse'' in Federal programs, as the President emphasized in Executive Order 13520 of November 20, 2009, on *Reducing Improper Payments* (74 FR 62201; November 25, 2009; *http://www.gpo.gov/fdsys/pkg/FR-2009-11-25/pdf/E9-28493.pdf*). Accordingly, as the President explained, it is important for Federal agencies ''to more effectively tailor their methodologies for identifying and measuring improper payments to those programs, or components of programs, where improper payments are most likely to occur.'' This proposed guidance is aimed at achieving these goals by focusing our Single Audit tool on the programs and practices that pose the greatest risk of improper payments, waste, fraud, and abuse.

This proposal would streamline the language from eight existing OMB circulars into one document. This consolidation is aimed at eliminating duplicative or almost duplicative language in order to clarify where policy is substantively different across types of entities, and where it is not. As a result, the proposed guidance includes sections and parts of sections which are clearly delineated by the type of entity to which they apply. For Federal agencies, auditors, and pass-through entities that engage with multiple types of entities in the course of managing grants, this consolidation is intended to clarify where policies are uniform across entities or differ, protecting variances in policy where required by the unique nature of each type of entity.

Accordingly, section .101 Applicability outlines how each subchapter of the proposed circular will apply across types of entities. All provisions of this circular would apply uniformly to grant and cooperative agreement awards made to state, local, and tribal governments, institutions of higher education, and nonprofit organizations except where specific variations by entity are described within

this circular. The provisions of Subchapter G Audit Requirements will apply to all awards made to the above-mentioned types of entities as described in section .702 Basis for Determining Federal Award Expenditures. These provisions would apply equally to recipients and subrecipients receiving Federal awards. The proposal states that Federal agencies may apply the provisions of Subchapters B through F to commercial organizations, foreign governments, organizations under the jurisdiction of foreign governments, and international organizations. The provisions of subchapter G would not apply to non-U.S.-based entities expending Federal awards. OMB may consider providing further guidance in the future around best practices for applying the policies in subchapters B–F to commercial and non-U.S. based entities.

OMB is interested in receiving broad public feedback to further refine these ideas. Comments received will be considered as OMB develops a refined final guidance document. Following the implementation of these reforms, OMB will continue to monitor their effects to evaluate whether (and the extent to which) the reforms are achieving their desired results, and will consider making further modifications as appropriate.

B. Background

This proposal reflects input from over a year of work by the Federal and non-Federal financial assistance community. In response to the President's direction that OMB and Federal agencies identify ways to make the oversight of Federal funds more effective and more efficient, OMB worked with the Office of Science and Technology Policy (OSTP) to convene meetings with both Federal and non-Federal stakeholders to discuss possible reform efforts. These meetings resulted in OMB receiving a series of reform ideas in late 2011 that were developed into the ANPG published on February 28th, 2012. That notice and the more than 350 comments received in response to it are available to the public on *www.regulations.gov.*

On October 27, 2011, the OMB Director issued Memorandum M–12–01, *Creation of the Council on Financial Assistance Reform* (*http://www.whitehouse.gov/sites/default/files/omb/memoranda/2012/m-12-01.pdf*). To ''create a more streamlined and accountable structure to coordinate financial assistance,'' the Memorandum established the interagency Council on Financial Assistance Reform (COFAR) as a replacement for two Federal boards (the Grants Policy Council and the Grants Executive Board). The 10-member COFAR is composed of OMB's Office of Federal Financial Management (Co-Chair); the eight largest grant-making agencies, which are the Departments of Health and Human Services (a Co-Chair), Agriculture, Education, Energy, Homeland Security, Housing and Urban Development, Labor, and Transportation; and one additional rotating member to represent the perspectives of other agencies, which for the first two-year term is the National Science Foundation.

As the COFAR begins to solidify its role in the grants community, it has committed to engaging in outreach efforts with both Federal and non-Federal stakeholders, both in response to this proposal and going forward. Since the COFAR's first meeting on November 4, 2011, and through its review of the comments received in response to the ANPG, it has worked to formulate and further develop reform ideas to create the 21st-Century version of financial management policy for Federal assistance awards. These reform ideas as presented originally in the February notice, the broad themes of comments that were received in response to them, and the refined proposals presented here are outlined below in Part II of this notice. Part III is the actual draft text of the proposed guidance.

II. Reform Ideas Discussed in the Advance Notice of Proposed Guidance

In the ANPG, OMB invited comments from the public on all issues addressed in the advance notice, and further invited the public to suggest additional reform suggestions. The goal of publishing the ANPT was to provide the broadest possible collection of stakeholders in the grants community with visibility on these ideas and the opportunity to participate in the discussion.

In response to the notice, OMB received more than 350 comments which were carefully considered in the development of this proposal. Accordingly, this section will continue the discussion by outlining the ideas that were proposed in the advance notice, the broad themes identified in the comments that were received across stakeholders, and the resulting reforms that OMB is proposing in this guidance. In addition, this section addresses particularly popular ideas for reform beyond the ANPG that were proposed by commenters and considered by OMB.

OMB views this proposal as an important opportunity to solicit stakeholder feedback, and the first opportunity for the public to comment on specific language under consideration. The language proposed here is subject to revision; the feedback received will influence the extent to which this language becomes final. In some cases, we have noted in this section where there is language in the proposal that was particularly difficult to craft, and where feedback on the policy direction outlined will be especially useful in charting the future path.

The reform ideas under discussion are outlined below in four main categories:

1. Section A: Reforms to Administrative Requirements (the government-wide Common Rule implementing Circular A–102; Circular A–110; and Circular A–89).
2. Section B: Reforms to Cost Principles (Circulars A–21, A–87, and A–122).
3. Section C: Reforms to Audit Requirements (Circulars A–133 and A–50).
4. Section D: Additional Suggestions Outside of the Guidance Reform.

In addition, more minor changes are listed in the crosswalk provided on the OMB Web site with this proposal.

Section A: Reforms to Administrative Requirements (the Common Rule Implementing Circular A–102); Circular A–110; and Circular A–89: Subchapters A–E

This section discusses proposed changes to the government-wide common rule implementing Circular A–102 on *Grants and Cooperative Agreements with State and Local Governments;* Circular A–110 on *Uniform Administrative Requirements for Grants and Other Agreements with Institutions of Higher Education, Hospitals and Other Non-Profit Organizations* (2 CFR part 215); and Circular A–89 on *Catalog of Federal Domestic Assistance.* The following are ideas for reform that were discussed in the February 28th Advance Notice of Proposed Guidance.

1. Creating a consolidated, uniform set of administrative requirements: subchapters A–E

The ANPG solicited comments on consolidating the administrative requirements in OMB Circulars A–102 and A–110 into a uniform set of administrative requirements for all grant recipients.

The goal of this consolidation would be to eliminate duplicative (or almost duplicative) language while clarifying where there are important substantive policy variances across entities. This consolidation is aimed at eliminating confusion for entities—such as Federal

agencies, auditors and pass-through entities—that deal with more than one type of grant-recipient entity, and for whom greater clarity about which language is universal and which is not could be useful. Further, this language has been updated to reflect common 21st-Century business practices, such as electronic submissions of information, and to anticipate an even greater reliance on advances in information technology to move, store, and share data in the future. Finally, consolidation of the guidance aims to ensure that references across the guidance to other topics and sections are streamlined to most efficiently facilitate the understanding of complete policies.

Comments received in response to this idea in the ANPG fell broadly into two categories. Those commenters who deal habitually with more than one type of grant-recipient entity were generally in favor or open to consolidation, noting that consolidating duplicative or similar language and clarifying policy differences would relieve administrative burden. Other entities were less likely to see any potential benefit from the consolidation.

Some responders expressed concern that consolidation of circulars could lead to the broader application of onerous policies that previously had applied to a narrow set of entities. OMB has endeavored to craft the proposed language in such a way as to avoid this outcome, but will appreciate feedback if there are places where policies have inadvertently been broadened in an unfavorable way. Other responders worried that consolidation of the circulars might make it more difficult to make future changes that may only be applicable to one set of entities. OMB is sensitive to this concern, and believes that we will be able to remain responsive to the needs of all stakeholders through the ongoing outreach efforts of the COFAR, regardless of the level of integration of guidance in the circulars.

In this proposal, Subchapters A–E consolidate the administrative requirements as discussed. In drafting the consolidated version of the administrative requirements, OMB for the most part used language from OMB Circular A–110, and then endeavored to explicitly articulate where there were separate provisions for state, local, and tribal governments carried over from A–102, as described in the crosswalk published on the OMB Web site with this notice. In section .504 Procurement standards, sections .40– .41 of A–110 were replaced with section .36 of A–102. OMB will be particularly interested in feedback from entities previously subject to the provisions of A–110 as to whether the new provision would result in increased administrative burden.

2. Requiring pre-award consideration of each proposal's merit and each applicant's financial risk: section .205 Agency Review of Merit of Proposals and Risk Posed by Applicants

The ANPG solicited comments on requiring agency consideration of the merit of each proposal and the financial risk associated with each applicant prior to making an award. The goal of this requirement would be to articulate as a government-wide policy a set of policies that, though widely practiced, have not previously been universally required across Federal agencies. Requiring agencies to design and implement a merit-based review process and to transparently disclose the criteria for that review in notices of funding availability will help ensure that all applicants for Federal assistance are guaranteed a fair and consistent review, and that they have the information they need to craft the strongest possible applications. Further requiring agencies to review the financial risk posed by applicants will ensure that agencies are able to take appropriate steps to provide oversight for the award to mitigate any risks that may be present. This could supplement the oversight provided by audit activities which take corrective action well after the funds have been spent, and could result in complementary pro-active prevention of waste, fraud, and abuse.

Some of the comments received indicated concern that the proposal could hamper effective review policies and practices that agencies currently use. OMB has endeavored in crafting this language to ensure that these requirements do nothing to constrict the policies of agencies that already have robust review processes in place. As drafted, the requirements for merit-based review and financial risk review are separate and distinct, and each provides great flexibility to agencies.

Tribal entities expressed concern that this policy could contravene the requirements of the Indian Self-Determination and Education Assistance Act (ISDEAA). OMB notes that where the requirements in this guidance (and any OMB guidance) conflict with Federal statute, the statute always governs. These proposals should be read as applicable only when they do not conflict with existing statutes, as described in section .101 Applicability.

Many commenters noted that the requirements of the Single Audit Act should already provide agencies with all necessary information about financial risk. Indeed, the proposed guidance includes Single Audit reports as one type of information that agencies may use in these reviews, but further options are available in the event that, for a particular set of circumstances, the Single Audit is not the most appropriate tool.

In this proposal, section .205 Agency Review of Merit of Proposals and Risk Posed by Applicants includes this requirement as discussed. The language in the proposal intentionally provides significant flexibility to agencies with respect to how these requirements are implemented. In particular, the requirement for an assessment of risk may be conducted at any point prior to an agency making an award, and therefore need only include review of applications likely to be selected for funding. OMB believes that this flexibility is important given the diverse nature of Federal programs and the types of information that might be most appropriate in different cases. Recognizing that these reviews can be equally burdensome for both Federal agencies and for recipients, OMB expects that agencies will not to use this latitude to design overly burdensome requirements.

3. Requiring agencies to provide 90-day notice of funding opportunities: Sections .203 Requirement to Provide Public Notice of Federal Financial Assistance Programs and .204 Announcements of Funding Opportunities

The ANPG discussed requiring Federal agencies to provide 90-day advance forecast of funding opportunities in an updated Catalog of Federal Financial Assistance (CFFA) that would replace the existing Catalog of Federal Domestic Assistance (CFDA). The goal of this reform would be to provide applicants with enough time to prepare the best possible applications. At the time of the **Federal Register** Notice, OMB suggested that the CFFA, as an existing database of Federal programs, might be the most efficient tool to implement this requirement.

Many Federal agencies noted that implementation of a 90-day advance notice would be impossible in the event that appropriations take place late in the fiscal year, in which case agencies need to publish funding opportunities as soon as possible. Given the frequent need for agencies to publish solicitations expeditiously after appropriations, OMB proposes to help ensure that applicants have adequate time to apply by instead articulating a minimum amount of time for the solicitation to be open on grants.gov.

Generally, comments received from recipient entities were in favor of providing applicants with as much time as possible to craft quality applications.

This proposal replaces the idea of 90-day advance notice in the CFFA with a requirement to ensure that all notices of funding opportunity be open for a minimum of 30 days on grants.gov, unless required by statute or unless exigent circumstances dictate otherwise as determined by the agency head. This language is proposed in section .204 Announcements of Funding Opportunities.

This proposal also refers to the Catalog of Federal Domestic Assistance by using the new name of the Catalog of Federal Financial Assistance. The final decision to change the name will be made in the context of ongoing COFAR governance of the Integrated Acquisition Environment and System for Award Management which currently hosts the CFDA and other governmentwide systems that support the grants community. This process will include consideration of any relevant system-related consequences to a name change.

In addition to these proposed changes to guidance, OMB is working with Federal agencies on the development of the Federal Program Inventory (FPI) over the course of 2013–2014. The FPI uses a broader definition of Federal Program than the definition proposed in this guidance, which refers specifically to the CFFA. The Federal Program Inventory will likely include linkages to CFFA. For more detail on the FPI see A–11 Part 6 Section 280.

4. Providing a standard format for announcements of funding opportunities: section .204 Announcements of Funding Opportunities

The ANPG discussed incorporating into circulars the existing requirement for certain categories of information to be published in announcements of public funding opportunities. *See* OMB Memorandum M–04–01 of October 15, 2003 (*http://www.whitehouse.gov/omb/memoranda_fy04_m04–01*), which announced the **Federal Register** notice that OMB published at 68 FR 58146 (October 8, 2003).

This is not a policy reform, but rather consolidation within the circular of separate guidance implemented in 2003 to further consolidate all applicable guidance for grants into one clear location.

Most comments received in response to the Advance Notice were generally in favor or had no objections to this consolidation.

This proposal incorporates this requirement in section .204 Announcements of Funding Opportunities.

5. Reiterating that information collections are subject to Paperwork Reduction Act approval: section .206 Standard Application Requirements

The ANPG discussed that information collection requests are limited to standardized data elements approved by OMB, as required under the Paperwork Reduction Act of 1995 (PRA), plus OMB-approved exceptions for all applications and reports. This is not a policy reform, but rather an indicator of the importance OMB places on compliance with the requirements of the Paperwork Reduction Act of 1995, and an indication that OMB will be using the PRA process to ensure that agencies make use of standard approved collections wherever possible to encourage broader goals of data standardization across government. As this standard of review is implemented, Federal agencies may find that fewer non-standard information collections are approved, if not required by statute.

Comments in response to the ANPG generally did not object to continued use of the Paperwork Reduction Act. Some comments emphasized in particular that use of government-wide systems to support information collections, such as Grants.gov, should be consistently funded and supported as standardization of information collections continues.

This proposal includes this language in section .206 Standard Application Requirements. In addition, the proposed language eliminates references to specific OMB-approved forms, and refers only broadly to OMB-approved information collections. This proposed language is not intended to have an immediate effect on the forms used, but is intended to broaden applicability so that, as the Federal government replaces forms with electronic collections of data elements, this guidance will continue to apply. Final guidance will be accompanied by a full list of the OMB-approved information collections that are available. For example, where section ____.206 Standard Application Requirements refers to ''the information approved by OMB for governmentwide use for applications,'' the list accompanying final guidance will refer section 206 to the 424 family of forms and any other OMB-approved information collections for applications, though in the future, the data currently included in the 424 forms may be collected differently.

6. Additional Suggestions for Administrative Requirements

In response to the ANPG, OMB received a number of suggestions for ways that existing guidance could be clarified. OMB reviewed these and anticipates that clarifications made in the draft language in subchapters A–E may address many of them. The most notable clarifications are as follows:

A. Subchapter C Federal Award Notice and Subchapter D Inclusion of Terms and Conditions in Federal Award Notice lay out mostly new uniform requirements for the information that agencies are required to provide to recipients at the time that an award is made. This language is based on work done by the Grants Executive Board and Grants Policy Committee, two interagency councils that preceded the COFAR in providing policy leadership to the grants community. In particular, this language includes the requirement to include a unique award identifier in the notice. OMB will continue working with Federal agencies to provide further guidance on the inclusion of this data element.

B. Section 501 Subrecipient Monitoring and Management is created to co-locate guidance on oversight of subawards that previously was located in different places in different OMB Circulars. This is an attempt to provide greater clarity into the expectations for subaward oversight across the Federal government.

C. Language in section 502 Standards for Financial and Program Management and other minor language throughout the guidance is updated to align the objectives for performance monitoring and measurement with those described for Federal agencies in OMB Circular A–11.

D. Language in section .504 Procurement Standards (d) updates the threshold for small purchase procedures to be consistent with the simplified acquisition threshold at 41 U.S.C. 403(11) (currently at $150,000).

E. Language in Section .506 Records and Retention (c)(1) is simplified to clarify that the 3-year period for retention of documents starts on the day the award recipient submits its final expenditure report.

F. Section .808 on Closeout adds language that Federal agencies complete all closeout actions for Federal awards no later than 180 days after the final report is received. OMB will consider whether further guidance on closeout is needed.

Finally, some state government entities asked that the threshold for requirements applicable to equipment

be raised above $5,000, but further discussions indicated that the level of that threshold varies significantly at the state level. In order to provide for consistent award management across entities, OMB considers $5,000 to continue to be the most appropriate level for this degree of accountability.

B. Reforms to Cost Principles (Circulars A–21, A–87, and A–122, and the Cost Principles for Hospitals): Subchapter F Cost Principles and Appendices IV–IX

This section discusses proposed changes to the OMB cost-principle circulars that have been placed at 2 CFR Parts 220, 225, and 215 (Circulars A–21, *Cost Principles for Educational Institutions;* Circular A–87, *Cost Principles for State, Local and Indian Tribal Governments;* and Circular A–122, *Cost Principles for Non-Profit Organizations*), and, pending possible future review, to the Cost Principles for Hospitals that are in the regulations of the Department of Health and Human Services at 45 CFR Part 75, Appendix E (*Principles for Determining Costs Applicable to Research and Development Under Grants and Contracts with Hospitals*). The following ideas for reform were discussed in the ANPG.

1. Consolidating the cost principles into a single document, with limited variations by type of entity: Subchapter F and Appendices IV through IX

The ANPG solicited comments on consolidating the cost principles in OMB Circulars A–21, A–87, and A–122, and the Cost Principles for Hospitals that are in the regulations of the Department of Health and Human Services at 45 CFR Part 75, Appendix E, into a uniform set of cost principles for all grant recipients.

The goal of this consolidation would be to eliminate duplicative (or almost duplicative) language while clarifying where there are important substantive policy variances across entities. This is aimed at eliminating confusion for entities such as Federal agencies, auditors, and pass-through entities that deal with more than one type of grant recipient entity, and for whom greater clarity about which language is universal and which is not could be useful. Further, the goal is to provide updated language to reflect common 21st-Century business practices, such as electronic submissions of information. Finally, consolidation of the guidance aims to ensure that references across the guidance to other topics and sections are streamlined to most efficiently facilitate the complete understanding of each policy.

Comments received in response to this idea in the ANPG fell broadly into the same two categories as those regarding consolidation of the circulars for administrative requirements. Those commenters who deal habitually with more than one type of grant recipient entity were generally in favor or open to consolidation, noting that consolidating duplicative or similar language and clarifying policy differences would relieve administrative burden. Other entities, in particular in the university community, who do not habitually deal with other types of grant recipients, were less likely to see any potential benefit from the consolidation.

Some responders expressed concern that consolidation of circulars into one set of guidance could lead to the broader application of onerous policies that previously had applied to a narrow set of entities. OMB has endeavored to craft the proposed language in such a way as to avoid this outcome, but will appreciate feedback if there are places where policies have inadvertently been broadened in an unfavorable way. Other responders worried that the proposed consolidation might make it more difficult to make changes that would only be applicable to one set of entities. OMB is sensitive to this concern, and believes that we will be able to remain responsive to the needs of all stakeholders through the ongoing outreach efforts of the COFAR, regardless of the level of integration of guidance.

In this proposal, Subchapter F and Appendices IV–X consolidate the cost principles except those for hospitals, as discussed below. The majority of the consolidation is in Subchapter F, which outlines the basic considerations and the selected items of cost. Appendices IV–X provide specific guidance for negotiating indirect cost rates that varies by specific type of entity. Based on initial feedback, OMB proposes to conduct further review of the cost principles for hospitals, and will make a future determination about the extent to which they should be added in a reserved Appendix XI to this guidance based on the outcome of the review.

OMB will be particularly interested in feedback from the public on the language used in the consolidated cost principles, and whether any particular entity perceives a change in policy that appears unfavorable. OMB also notes that in response to concern from tribal entities that the consolidated cost principles may conflict with the cost principles provided in the ISDEAA, the subordination of this guidance to that statute was specifically articulated in section .101 Applicability.

2. For indirect (''facilities and administrative'' or f&a) costs, using flat rates instead of negotiated rates: section .616 Indirect (F&A) Costs

The ANPG discussed two different possibilities for offering flat indirect cost rates; one that would be a mandatory and universal discount from a negotiated rate, and a second that would give entities the option of choosing a flat discount from a previously negotiated rate.

The goal of this discussion was to explore whether the savings that could be accrued by avoiding the complexities of the negotiation process could be recaptured both by recipients and Federal agencies through a slightly lower rate that would split the difference in the cost of the process evenly. It seemed that there could be a win-win amount that allowed the Federal government to pay a lower rate, but still provide an overall savings for recipients.

Commenters were universally against the idea of a mandatory flat discounted rate. Some who responded were in favor of having an optional flat rate, but almost all commenters indicated that if the flat rate were below the negotiated rate, it would almost always be worth it to negotiate for the difference.

Two new suggestions emerged that had not been discussed in the ANPG. One was to provide the option for entities and Federal agencies to agree to extend the period of utilization of a rate once negotiated. The second idea was proposed by the nonprofit community, and entailed explicitly requiring pass-through entities to honor rates that are negotiated at the Federal level.

Finally, some expressed interest in the availability of a minimum flat rate for entities that had never had a negotiated indirect cost rate. Such entities could adopt this rate for an interim period, while developing capacity to engage in negotiations.

As a result of this feedback, this proposal does not further contemplate a flat negotiated rate, but rather provides in section .616 Indirect (F&A) costs for all types of entities the option of extending negotiated rates for up to 4 years subject to approval of the indirect cost cognizant agency. This one-time extension will only be approved if there have been no major changes in indirect costs. If an extension is granted the entity would not be allowed to request a rate review until the extension period ends. OMB hopes that this extension of the negotiated rate may provide a reduction in burden by reducing the frequency of negotiations.

In addition, also in section .616 Indirect (F&A) Costs, a minimum flat rate of 10% of modified total direct costs has been added to ensure that entities without the capacity for a full negotiation receive a minimum reimbursement for no more than four years while they develop the capacity to engage in full negotiations. Finally, section .501 Subrecipient Monitoring and Management explicitly requires pass-through entities to either honor the indirect cost rates negotiated at the Federal level, negotiate a rate in accordance with Federal guidelines, or provide the minimum flat rate. This is aimed at ensuring that entities who receive Federal funds primarily indirectly nevertheless are appropriately reimbursed for the allowable costs associated with the award.

3. Exploring alternatives to time-and-effort reporting requirements for salaries and wages section .621 Selected Items of Cost, C–10 Compensation—Personal Services

The ANPG discusses OMB's intent to identify possible alternatives to current reporting requirements for validating the costs of salaries and wages. The discussion points to three pilots that are currently ongoing as possibly instructive examples of alternatives.

Consideration of alternatives to time and effort reporting reflects the long-term goal of tying assessment to the achievement of programmatic objectives rather than measurement of effort (hours) expended. OMB has learned that though this is an important long-term goal, based on the diverse nature of programs across the Federal government and related variations in methodologies for measuring achievement and outcomes, time and effort reporting continues to be viewed by the audit community as an important tool for confirming appropriate use of funds.

In response to the ANPG, institutions of higher education in particular pointed out that current requirements are particularly restrictive because they include specific examples of compliance with current requirements which, over time, have become the rule. These commenters recommended broadening time and effort reporting language to omit specific examples and instead feature the essential principles for accountability based on strong internal controls that entities could then implement however is most appropriate for them. Some in the auditing community similarly commented that while open to streamlined guidance, they recommend OMB ensure that the standards for appropriate internal controls and audits remain clear.

This proposal addresses these ideas with language in section .621 Selected Items of Cost, item C–10 Compensation—Personal Services. Within this language, OMB has consolidated reporting requirements that previously differed across types of entities and eliminated specific examples in order to clarify the broad principles of how an entity may establish the internal controls that would allow them to validate these costs. It recognizes the potential to integrate the necessary information in automated payroll distribution systems where clear internal controls govern those systems, thereby reducing duplication.

OMB will be interested in feedback from the audit community on whether the draft language provides sufficient guidance to result in a set of requirements that will be easily audited. Further, OMB will be interested in feedback from the recipient community on whether the language proposed adequately provides enough flexibility for entities to meet these standards in the way most appropriate to their particular organizations, and in ways that may change over time as technology continues to advance.

4. Revisions to reimbursements for utility costs to institutions of higher education. Appendix IV—Indirect (F&A) Costs Identification and Assignment, and Rate Determination for Educational Institutions

The ANPG discusses expanding the application of the 1.3% indirect (F&A) costs adjustment for utility costs of research to more institutions of higher education.

The goal of this reform idea would be to eliminate unfairness inherent in a policy that provides a benefit to a limited group of institutions based on arbitrary criteria without consideration of applicability to other institutions. The Utility Cost Adjustment (UCA) currently provides an extra 1.3% percentage points in addition to the negotiated indirect cost rate to 65 institutions of higher education for research grants. The ANPG noted that OMB would work with Department of Defense's Office of Naval Research and the Department of Health and Human Services' Division of Cost Allocation to develop guidelines and a format for entities to apply for this benefit in a streamlined way that ensured the adjustment was only provided where real costs exist. Further, the notice discussed requiring entities to demonstrate a plan to bring utility costs down over time.

The need for action is a result of the fact that utility costs, while included in indirect cost rate negotiations, are generally recorded only at the building level, making it difficult to document the utility cost that should be allocated to Federal awards as opposed to other activities. This is particularly true for research, where funded activities are likely to use more energy than teaching, for example. The current situation is further complicated by the fact that the 1.3% adjustment itself is long outdated and based on limited information. Thus, there is a strong sense in the Federal community that some additional way to verify the accuracy of the adjustment is also overdue.

Commenters from the university community were in favor of expanding the adjustment, but many who currently receive the adjustment preferred that it not be expanded if the expansion would mean a reduction in funds to those who currently receive it, or in other words, a cost neutral expansion. Further, commenters argued strongly that the expansion should not be linked to a burdensome application or justification process, nor a burdensome process to document reductions in cost over time.

OMB has received feedback from rate setting agencies that given the complexities of documenting utility costs, it is likely that any type of study or application done to justify costs would be difficult to achieve with accuracy and without inducing significant administrative burden and expense for both recipient entities and Federal agencies.

As a potential solution, language in Appendix IV of this proposal would replace the 1.3% utility cost adjustment that is currently in effect with two options for reimbursement of utility costs. The first would allow any institution of higher education to meter their utility usage at the sub-building level instead of by building. When metering utility usage by function is not feasible, entities may add a multiplier to their square footage used for research to calculate ''effective'' square footage for purposes of utility cost calculation. Taken together, these two options should provide a more accurate reimbursement of utility costs through the normal indirect cost rate negotiation process than the current practice of metering by building does. OMB will be interested in responses to this proposal from institutions of higher education, particularly with regard to whether metering at the sub-building level within buildings is a feasible option for them or whether changes in metering practice are prohibitively expensive, the extent to which the calculation of the

effective square footage is viewed as a fair proxy for utility costs, and whether this is likely to significantly increase the accuracy of utility cost reimbursements.

5. Charging directly allocable administrative support as a direct cost. Section .615 Direct Costs

The ANPG discussed clarifying the circumstances under which institutions of higher education and other entities where appropriate, may charge directly allocable administrative support as a direct cost. Included in this discussion were examples of appropriately direct chargeable project-specific activities such as managing substances such as chemicals, data and image management, complex project management, and security.

The goal of this reform idea was to ensure that charges are appropriately classified in order to provide support for all of the costs directly associated with a Federal award. It is further aimed at addressing a concern raised by institutions of higher education for which administrative tasks directly associated with a research grant routinely make up a significant proportion of directly allocable activities and costs.

Comments received, including from the university community, indicated a preference that any further guidance rely on the overarching cost principles, which indicate that an item or activity may be charged directly to a grant if it is clearly allocable to that award, as opposed to an activity that supports multiple projects. This principle remains true regardless of whether the work performed is administrative in nature.

This proposal reflects that principle, and guidance proposed in section .615 Direct Costs indicates that all work that is directly allocable to one award may be charged to that award, regardless of the type of task. With this proposal OMB hopes to provide consistently across the cost principles that direct costs are those allocable to one award, while indirect costs are those that cannot easily be so allocated.

6. Including the costs of certain computing devices as allowable direct cost supplies. Section .621 Selected items of cost, C–31 Material and Supplies Costs, Including Costs of Computing Devices

The ANPG discussed explicitly including the cost of computing devices not otherwise subject to inventory controls (i.e. cost less than the organization's equipment threshold) as allowable direct cost supplies. Applicants for Federal awards would be required to document these items as a separate line-item in their budget requests, but would not be required to conduct the more stringent inventory controls in place for equipment.

The goal of this clarification would be to ensure that charges are appropriately classified in order to provide support for all of the costs directly associated with a Federal award, while reducing the burdens of securing special permission to purchase what have become routine supplies. This is not intended to result in a net cost increase, but rather to provide clarity in how allowable costs are routinely charged. The need for this clarification is a result of the fact that while computing devices routinely cost less than the $5,000 equipment threshold, they are seen as highly valuable items. These facts have led to diverse opinions as to whether these devices should be treated as equipment versus supplies, and to audit findings of incorrect documentation.

Commenters in the recipient community were generally in favor of this reform, but specified a preference that these items not require separate line items in budget requests as the ANPG contemplated. Those with this preference noted that specifying separate line items would limit existing rebudgeting authority in a way that would lead to less efficient administration of grants. The audit community argued in contrast that computing devices are both highly valuable and contain highly sensitive data, and so should be subject to more detailed inventory requirements as they would be if classified as equipment. Others proposed that because these items may be used for more than one award, they should be treated as indirect costs.

This proposal discusses this idea in section .621 Selected items of cost, Item C–31 Material and Supplies Costs, Including Costs of Computing Devices. The language proposed reflects feedback OMB received from Federal agencies that the sensitivity of data stored on computing devices should not be a factor in determining cost accounting, since protection of that data is a separate area of internal control. Recipient entities are responsible for the security and encryption of their data regardless of how the devices are accounted for. Further, the costs of documenting inventories for these items would be significant and generally detrimental to the efficient administration of the grant. Given the low cost of these items (generally far below the $5,000 threshold) the proposed language anticipates that they fit naturally within the category contemplated as supplies, and should be explicitly included there, without further requirements to add a line item in the budget. Further, OMB believes these items are similar in their allocability to other items typically in the supply category, which are directly allocable because of their programmatic relevance for the execution of an award, but which may have some unavoidable excess capacity.

7. Clarifying the threshold for an allowable maximum residual inventory of unused supplies. Section .621 Selected items of Cost, C–31 Material and Supplies Costs, Including Costs of Computing Devices

The ANPG discussed harmonizing cost principles with existing language in Circulars A–110 and A–102 to clarify that $5,000 is the threshold for an allowable maximum residual inventory of unused supplies as long as the cost was properly allocable to the original agreement at the time of purchase. The notice included language to the effect that these supplies may be retained for use on another Federal award at no cost, though that language did not align with existing guidance found in Circulars A–110 and A–102.

The goal of this clarification is to minimize confusion about appropriate disposal or re-expensing of unused inventories at the conclusion of an award and at ensuring consistency in the application of the cost principles. Federal agencies view this requirement as important, because below this level the costs for the agency to recover, inventory, store, and dispose of these items would exceed the benefit of such efforts. Though the auditing community expressed some concern, particularly about what would be done when the recipient did not have another Federal award for which to retain the supplies, the majority of comments received on this idea were in favor of it.

This proposal clarifies language in section .621 Selected Items of Cost, Item C–31 Material and Supply Costs, including Costs of Computing Devices. This language is harmonized with language in the draft administrative requirements that states that $5,000 is the threshold for an allowable maximum residual inventory of unused supplies as long as the cost was properly allocable to the original agreement at the time of purchase. Consistent with existing administrative requirements, there is no requirement to retain the supplies for use on another Federal award.

8. Eliminating requirements to conduct studies of cost reasonableness for large research facilities. (No language in proposed guidance)

The ANPG discussed eliminating requirements for institutions of higher education, and other entities where appropriate, to conduct studies of cost reasonableness for large research facilities.

The goal of this reform would be to reduce paperwork that is costly to generate and duplicative of more useful information that is otherwise provided to the awarding agency. The cost reasonableness studies mentioned compare a specific set of data compared against a data set compiled by the National Science Foundation. This comparison does not yield information that is as useful as the information that is routinely reviewed by agencies any time a grant proposal includes a proposal for construction of a new facility. These routine reviews cover actual costs included in all aspects of the project, which program managers are able to evaluate using their expertise and knowledge of reasonableness of these proposals in comparison with others and with market prices. The specific studies in question have been found not to add additional value to this process.

Comments received in response to this idea were generally positive. This proposal eliminates the previously existing language.

9. Eliminating restrictions on sse of indirect costs recovered for depreciation or use allowances. (No language in proposed guidance)

The ANPG discussed eliminating the restrictions on the use of the portion of indirect cost recoveries associated with depreciation or use allowances. These restrictions are duplicative of the indirect cost rate negotiation process, during which appropriate indirect costs are documented, justified, and negotiated. This requirement put restrictions on the use of funds which were received as reimbursements for costs already incurred appropriately in accordance with negotiated indirect cost rates. Articulating requirements for how recipients should spend reimbursements is fundamentally duplicative.

Further, in this same item of cost, all references to use allowances have been eliminated. Use allowance was an alternative accounting method which was necessary at the time of the last update to OMB circulars because not all entities were capable of using the depreciation method. Now, however, the depreciation method is widely if not universally used, and use allowance has become an obsolete reference.

Comments received in response to this idea were generally positive. As a result, this proposal eliminates restrictions on depreciation reimbursements in section .621 Selected Items of Cost, item C–15 Depreciation.

10. Eliminating requirements to conduct a lease-purchase analysis for interest costs and to provide notice before relocating federally-sponsored activities from a debt-financed facility. (No language in proposed guidance)

The ANPG discussed eliminating requirements for institutions of higher education, and other entities where appropriate, to conduct a lease-purchase analysis to justify interest costs, and to notify the cognizant Federal agency prior to relocating federally sponsored activities from a facility financed by debt. The goal of this reform would be to reduce paperwork that is costly to generate and does not yield information that is useful to the awarding agency.

Where recipient entities are required to invest equity of their own in facilities they purchase, and where they must provide the up-front financing and are reimbursed based on the ongoing costs of facilities, OMB finds that entities have appropriate incentives to make the most cost-effective decisions about whether to lease or purchase a facility without providing additional paperwork to the Federal government. Further, Federal agencies have provided feedback that such paperwork does not meaningfully affect funding decisions.

Comments received in response to this reform idea were generally positive. This proposal therefore eliminates this requirement.

11. Eliminate requirements that printed ''help-wanted'' advertising comply with particular specifications. Section 621 Selected Items of Cost, C–42 Recruiting Costs

The ANPG discussed updating the cost principles to reflect the media now used for those notices. The goal of this reform would be to update guidance to conform to 21st-Century business processes. Comments received in response to this reform idea were generally positive.

This proposal updates this language accordingly, specifically in section .621 Selected Items of Cost, and item C–42 Recruiting Costs.

12. Allowing for the budgeting for contingency funds for certain awards. Section .621 Selected Items of Cost, C–12 Contingency Provisions

The ANPG discussed clarifying that budgeting for contingency funds associated with a Federal award for the construction or upgrade of a large facility or instrument, or for IT systems, is an acceptable and necessary practice, and that the method by which contingency funds are managed and monitored is at the discretion of the Federal funding agency. The goal of this reform would be to ensure that contingencies inherent in grant-funded projects are planned for in accordance with Generally Accepted Accounting Principles (GAAP) and with standard project-management practices. The language seeks to accomplish this while making clear that reserve funds which recipients would draw down in advance of a particular event actually occurring, are unallowable.

Comments received in response to this reform idea were generally positive. Some in the audit community suggested limiting contingency budgets to a percentage of the total award; however, Federal agencies considered that this would be contrary to GAAP, and difficult to do at the government-wide level given the diverse nature of Federal programs. OMB acknowledges Federal agencies' program managers as experts in the particular needs of their programs, and expects them to look carefully at all award budgets, including contingency budgets, to ensure that they are appropriate to the scope and scale of the project at hand. Some comments received indicated a preference for establishing advance draw-down reserve funds, but OMB finds that this would result in undue risk of improper payments, and additional administrative burden to recover such funds if they were not needed.

This proposal includes language to this effect in section. 621 Selected Items of Cost, C–12 Contingency Provisions.

13. Strengthening requirements for all recipients to document cost accounting practices and provide necessary paperwork to auditors while eliminating cost accounting standards and requirement for institutions of higher education to file a disclosure statement. Section .502 Standards for Financial and Program Management

The ANPG discussed whether OMB should request that the CASB consider increasing from $25 million to $50 million in Federal awards per year (based on the average of an entity's three most recent years) the minimum

threshold for institutions of higher education to file a cost accounting standards disclosure statement. Comments received in response to this reform idea were generally positive, though members of the university community argued that institutions of higher education should not be subject to CAS requirements for financial assistance, since in the intent of these standards is duplicative of OMB guidance for grants but the language adds layers of complexity. Further, comments argued that universities should be exempt from requirements to file disclosure statements, on the basis that they are audited on the compliance of their internal policies with cost-accounting standards described in OMB guidance, making the added disclosure duplicative. Further, they find the process to obtain approvals of updates to the form itself to be often subject to frustrating delays. Comments from the auditing community indicate that any audit finding would ultimately rest on whether the entity's internal policies comply with OMB guidance, though some noted that the form itself provides a useful overview of cost accounting practices that have been pre-approved by the Federal government, providing a helpful starting point for any review. OMB recognizes that these requirements are applied solely to universities, posing an additional requirement on a particular group of entities without a clear justification for singling out that particular group.

Ultimately, OMB finds it essential for all recipients to document their cost accounting standards and to provide auditors with any and all documentation required to satisfy audit inquiries. As a result, OMB has reviewed the proposed language in section .502 Standards for Financial and Program Management, paragraph (c). The existing requirement from A–110 that all recipients document their cost accounting practices remains sufficiently comprehensive and unchanged, but this proposal adds a cross reference to section. 506 on Record Retention and Access, which specifically authorizes awarding agencies, Inspectors General, and the Comptroller General of the United States to access these records. In addition, language has been added in section .708 Auditee Responsibilities to require recipients to provide auditors with any and all documentation required to complete the required audit. Finally, in the Single Audit Compliance Supplement, OMB would add language asking auditors to verify that recipients comply with the documentation requirements and to report any non-compliance appropriately as an audit finding.

OMB has also removed the CAS standards from the guidance, and eliminated the requirement for universities to file a disclosure statement that must be approved by the awarding agency. This change applies only to the guidance for grants and cooperative agreements; this in no way alters requirements under the Federal Acquisition Regulation governed by the CASB that apply to entities receiving awards of contracts.

14. Allowing for excess or idle capacity for certain facilities, in anticipation of usage increases. Section .621 Selected Items of Cost, C–24 Idle Facilities and Idle Capacity

The ANPG discussed allowing for excess or idle capacity in consolidated data centers, telecommunications, and public safety facilities. The goal of this reform is to acknowledge the unique requirements inherent in consolidation of data centers as encouraged by the President in order to deliver a 21st-Century government. Data centers and other types of facilities require excess capacity at their creation in order to accommodate increases and fluctuations in usage later on. Other telecommunications facilities and public-safety emergency-response facilities have similar characteristics.

Comments received in response to this idea were generally positive. This proposal incorporates this idea in section .621 Selected Items of Cost, item C–24 Idle Facilities and Idle Capacity.

15. Allowing costs for efforts to collect improper payment recoveries. Section .621 Selected Items of Cost, C–8 Collections of Improper Payments

The ANPG discussed adding a new item of cost specifically to allow recipients to be reimbursed for expenses associated with the effort to collect improper payment recoveries or related activities. The goal of this reform is to better encourage recipient entities to assist the Federal government to meet the President's directive to improve the Federal government's ability to recover improper payments. The draft language is intended to allow recipients to keep an amount of funds collected to cover expenses of collection efforts, where the amount collected is likely to exceed the expense of collection.

These costs may be considered either indirect or direct costs as most appropriate for the entity in question. Amounts collected that exceed the expense of collection shall be treated in accordance with accepted cash management standards.

Though most comments received in response to this reform idea were generally in favor of it, some in the university community noted that where these are indirect costs, which are capped, additional allowability would not affect them. This proposal includes language in section .621 Selected items of cost, item C–8 Collections of Improper Payments to clarify allowable treatment of these costs.

16. Specifying that gains and/or losses due to speculative financing arrangements are unallowable. (No language in proposed guidance)

The ANPG discussed adding an item of cost to the guidance to clarify that gains or losses related to debt arrangements on capital assets due to speculative financing arrangements (such as hedges or derivatives) are unallowable. The goal of this reform idea was to protect the government from the scenario where recipients were charging losses from financing arrangements to awards as direct costs, but not crediting gains when accrued. Comments received in response to this reform were generally negative. Many institutions argued that they necessarily use these types of arrangements in order to balance legitimate investment portfolios that are part of institution-wide financial management plans, not exclusively for management of Federal awards. Nonprofits operating internationally argued that these types of financing arrangements are necessary in order to hedge against risk of currency fluctuations.

OMB concurs with the observations in the comments, and notes that OMB guidance governing grants is not intended to govern how an institution manages its financial portfolio beyond the assets related to Federal awards. Further, we find that the cases where recipients are inappropriately charging losses directly to awards would already be unallowable under existing guidance and would result in an audit finding, so additional guidance is not needed to mitigate these risks. Based on comments received, OMB has not included language to this effect.

17. Providing non-profit organizations an example of the certificate of indirect costs. Appendix V—Indirect (F&A) Costs Identification and Assignment, and Rate Determination for Non-Profit Organizations

The ANPG discussed providing non-profit organizations an example of the required certification (Certificate of Indirect Costs) similar to the

information that is already provided for state, local, and tribal governments. The goal of this reform idea would be to provide uniformity in documentation requirements across different types of entities.

Though comments from the nonprofit community were generally favorable, the university community objected to this reform and argued that the certificate of indirect costs should be eliminated for all types of entities. They argued that there are other remedies available to the Federal government if an institution is alleged to have committed fraud, and the certification includes unfortunate language that diminishes the spirit of the collaboration between these organizations and the Federal government. Though OMB continues to see value in the certification of indirect costs by a senior official of the entity, this proposal modifies the language in the certification to be aligned with the language in the state/local/tribal certification, which articulates the certification using more positive language. This proposal is included in Appendix V—Indirect (F&A) Costs Identification and Assignment, and Rate Determination for Non-Profit Organizations, and provides slightly modified language for institutions of higher education in Appendix IV—Indirect (F&A) Costs Identification and Assignment, and Rate Determination for Institutions of Higher Education.

18. Providing non-profit organizations with an example of indirect cost proposal documentation requirements. (No language in proposed guidance)

The ANPG discussed providing for non-profit organizations an example of indirect cost proposal documentation requirements similar to the information provided for state, local, and tribal governments. The goal of this reform idea would be to provide uniformity in documentation requirements across different types of entities. Comments received in response to this idea as originally articulated were generally neutral. However, a broader principle of this reform effort has been to eliminate examples from the proposed guidance, as they can ultimately cause more confusion than clarity as over time they tend to be treated as the rule. Instead, OMB will provide guidance on documentation for justification of indirect cost rates that will more likely take the form of an instruction manual such as the one previously published by the Department of Labor (found at *http://www.dol.gov/oasam/programs/boc/costdeterminationguide/main.htm#toc*) rather than specific examples. As a result, this proposal does not provide such an example, and further eliminates such examples for other types of entities.

19. Additional ideas for cost principles

In response to the ANPG, OMB received a number of suggestions for ways that existing guidance could be clarified beyond those articulated in the ANPG. OMB reviewed these and anticipates that clarifications made in the draft language in subchapter F may address many of them. Particular examples of requests that may have significant policy implications are:

A. Agency Exceptions to Use of Negotiated Cost Rates (Section .616 Indirect (F&A) costs)). Many entities, in particular institutions of higher education, raised concern that Federal agencies do not always honor negotiated indirect cost rates, despite existing language in relevant circulars that appears to instruct them to do so. OMB recognizes that agencies do make exceptions to the general policy of reimbursing indirect costs at governmentwide negotiated rates. Further, OMB recognizes that the current system calculates indirect cost rates as an average across all Federal awards. As a result, for any given award, the actual associated indirect cost will fall either above or below the negotiated rates, theoretically in even proportions.

In this proposal section .616 provides draft language to clarify the circumstances under which agencies may make exceptions to the negotiated rate. These include where exceptions are provided for in statute or regulation, or where the agency head has made a determination that the exception is important to the success of the program based on documented justification. Agency heads shall notify OMB of any approved deviations, so that OMB maintains a governmentwide view of the application of negotiated rates. OMB anticipates that programs with longstanding historical exceptions, such as NIH training grants, will continue within the new approval process. This stringent requirement for agency head approval should provide better transparency and understanding of these exceptions, and properly limit these exceptions to help ensure they are justified when they occur.

In addition, new language in section .502 Standards for Financial and Program Management provides that voluntary committed cost sharing is not expected under Federal research proposals and is not to be used as a factor in the review of applications or proposals, except where otherwise required by statute. This is intended to ensure that research proposals are evaluated on their merit, and that cost sharing expectations where they exist are consistent for all applicants.

B. Clarifications of cost principles for information technology. OMB received several suggestions from the National Association of State Chief Information Officers (NASCIO) that requested clarification of the cost principles for information-technology systems. The first of these was a request that the item of cost for interest articulate that financing costs are allowable for intangible assets as well as capital assets such as large buildings. OMB has included proposed language to this effect in section .621 Selected Items of Cost. In addition, NASCIO requested that OMB clarify guidance on whether provisions in section .503 Property Standards (d) Equipment may apply to equipment for information technology systems which have been consolidated. In particular, NASCIO requested including IT systems among the equipment which, when no longer needed by the Federal program for which it was originally purchased, may be used to support other Federally-funded activities. OMB has included proposed language to this effect in the above mentioned section.

C. Clarification of costs related to family-related leave and dependent care. Existing guidance has long allowed recipient institutions to establish their own documented institutional policies around fringe benefits and travel, and to fund external meetings and conferences provided they meet the conditions established by the relevant item of cost. However, OMB received suggestions from the American Association of University Women and other organizations indicating that because family-related leave and dependent care are not discussed specifically in OMB guidance, there may be confusion over the documentation required to establish their allowability. In response, we have included specific language in section .621, item C–11 Compensation—Fringe Benefits, C–32 Meetings and Conferences (external) and C–53 Travel Costs to clarify the requirements for documentation of these costs. This language does not require adoption of any new practices, and best mitigates risk of abuse of these policies by clearly aligning them with the existing requirement that any such costs are only allowable to the extent they are reasonable and consistent with written institution-wide policy and practice.

D. Participant support costs. Existing guidance that applies only to nonprofit entities states that participant support costs are allowable when approved by

the awarding agencies, and also notes that these costs are generally not included in calculations of modified total direct costs. This proposal would expand that language to all recipient entities in order to eliminate ambiguity in the guidance and to ensure appropriate Federal oversight and reimbursement for these types of expenses. Proposed language is in section .621, item C35 Participant Support Costs.

C. Reforms to Audit Requirements (Circulars A–133 and A–50) Subchapter G: Audit Requirements

This section discusses ideas for changes that would be made to the audit guidance that is contained in Circular A–133 on *Audits of States, Local Governments, and Non-Profit Organizations* and in Circular A–50 on *Audit Follow-up.* The following ideas for reform were discussed in the ANPG.

1. Concentrating audit resolution and oversight resources on higher dollar, higher risk awards. Sections .701 Audit Requirements and .719 Major Program Determinations

The ANPG discussed whether changing the Single Audit framework could enable agencies to focus their oversight and follow-up resources in the most efficient and effective way for targeting improper payments, waste, fraud, and abuse. The notice discussed options to raise the threshold for single audits from $500,000 to $1 million. Further, the notice discussed whether audits for entities expending between $1 million–$3 million could be streamlined to only two types of compliance requirements.

The goal of these reform ideas was to allow agencies to concentrate their audit oversight and follow-up resources more closely on areas of highest risk of waste, fraud, and abuse, consistent with EO 13520. For this purpose, OMB considers degree of risk as a combination of the likelihood that there is an internal control weakness multiplied by the possible consequence in dollars if there is. This calculation recognizes that an entity spending the greatest amount of money with the greatest likelihood of an internal control weakness poses the greatest risk to integrity of Federal funds.

One of the questions OMB posed to commenters in the ANPG was the extent to which entities make use of the Single Audit in order to manage programs and provide oversight over subrecipients. The answer to this question in a great majority of responses was that entities do make use of the Single Audit as an important oversight tool, and if the threshold were significantly raised entities would have to make use of different tools to provide oversight over Federal funds. Entities who would fall below the raised threshold inquired about what types of oversight could replace the Single Audit if it were no longer in place.

OMB received significant feedback from the audit community (e.g. certified public accountants, state auditors, and their professional organizations) that argued against a streamlined audit for entities expending between $1 million and $3 million in Federal awards. This community argued that inconsistencies in the types of entities receiving funds within a particular program would make it difficult to specify the one or two types of compliance requirements that would universally apply. Further, pass-through entities expressed concern that varying requirements significantly by program and size of entity would make it more administratively burdensome to oversee over subawards.

OMB also received several additional suggestions about how to re-configure the single audit coverage framework in order to best target risk. These suggestions included raising the threshold for determinations of major programs, changing the requirement for auditors to evaluate type B programs, raising the threshold for the amount of questioned costs, and requiring audited financial statements for all entities that fall below a new, higher single audit threshold.

As a result, this proposal contains the following changes in Subchapter G, Audit Requirements:

(A) Audit threshold. The threshold for the Single Audit Requirement would be raised from $500,000 to $750,000. This change would allow agencies to focus audit-follow-up resources on higher-risk entities. Further, this provides administrative burden relief to the roughly 5,000 non-Federal entities expending less than $750,000 in Federal awards while maintaining single audit coverage over more than 99 percent of the funds that are currently covered.

(B) Major Program Determination. This proposal includes changes to all four steps of the risk-based approach to focus on the areas of highest risk and reduce the number of major programs tested. Under the risk-based approach the auditor calculates a threshold (based on amount of Federal dollars expended) above which programs are designated ''Type A'' and below which they are ''Type B''; and follows a prescribed process to assess program risk to identify which programs will be audited as major programs. The auditor uses the guidance in the Compliance Supplement to test major program requirements and provides opinion level audit assurance on each major program. (See section .719 Major Program Determination) The proposed changes to this process are as follows:

1. Increase the minimum threshold for a program to be Type A from $300,000 to $500,000 (but do not change the alternative three percent of total Federal awards expended). (Step 1)

2. Refocus the criteria for a Type-A program to qualify as high-risk. Revised criteria would result in a Type A program being designated as high-risk only when in the most recent period the program failed to receive an unqualified opinion; had a material weakness in internal controls; or had questioned costs exceeding five percent of the program's expenditures. This change puts the focus of the risk determination on the most central questions of whether the program received a qualified opinion or had weak internal controls, as opposed to whether the program may have received any minor finding that may or may not have been essential to the financial integrity of the program. The requirement that a Type-A program be audited as major at least once every three years, regardless of whether it is high- or low-risk remains unchanged. (Step 2)

3. Reduce the number of high-risk Type-B programs that must be tested as major programs from at least one half to at least one fourth of the number of the low-risk Type A programs and allow the auditor to stop the Type-B program risk assessment process after this number of high risk Type-B programs are identified. (Steps 3 and 4)

4. Simplify the calculation to determine relatively small Type-B programs for which the auditor is not required to perform a risk assessment from the current stepped approach to a flat 25 percent of the Type A/B threshold. The change allows more Type-B programs to be classified as relatively small. (Step 3)

5. Reduce the minimum coverage required under the percentage-of-coverage rule from the current 50 percent for a regular auditee and 25 percent for a low-risk auditee to at least 40 percent for a regular and 20 percent for a low-risk auditee. (Step 4)

These changes to the major program determination will result in more targeted audit coverage of programs with internal control weaknesses. They provide appropriate burden relief for non-Federal entities that materially comply as evidenced by an unqualified audit opinion, and no material weaknesses in internal controls or material questioned costs. Because large

non-Federal entities (such as a larger state government) often have at least one audit finding in a program, under existing guidance, for these entities, almost all Type A programs may qualify as high-risk. The proposed changes provide an incentive for these non-Federal entities to focus on correcting the deficiencies that indicate underlying weaknesses in internal controls.

(C) Questioned Costs. Increase the minimum threshold for reporting questioned costs from $10,000 to $25,000 to focus on the audit findings presenting the greatest risk. This will eliminate smaller audit findings which require the investment of follow-up resources yet are unlikely to indicate significant weaknesses in internal controls. (See section .717 Audit Findings)

In addition, to address questions about the required level of subrecipient oversight, OMB has consolidated and clarified relevant guidance on subrecipient monitoring requirements in section .501 Subrecipient Monitoring and Management.

If these reforms to the audit threshold were implemented, OMB would consider issuing further guidance about the transition to the GAGAS-only audit and the extent to which recipients with known weaknesses would be required to resolve them before being subject to it.

2. Streamlining the types of compliance requirements in the Circular A–133 Compliance Supplement. Some language in Section __.713 Responsibilities, but more to be added in Single Audit Compliance Supplement

The ANPG discussed streamlining the types of compliance requirements found in the OMB Circular A–133 Compliance Supplement. The notice discussed streamlining these requirements by targeting a subset for increased testing, larger sample sizes, or lower levels of materiality, while de-emphasizing others, with an exception allowing Federal agencies on a program-specific basis to place higher emphasis on those other specific types of requirements believed to prevent waste, fraud, or abuse.

The goal of this reform idea would be to refocus the Compliance Supplement to better target areas of risk, thereby reducing the audit burden on non-Federal entities and allowing agencies to concentrate their oversight and audit follow-up resources on the requirements targeting the highest risk of improper payments, waste, fraud, and abuse.

Comments on this section from the audit community pointed out that to specify the amount of testing done for a particular type of compliance requirement would be incredibly complex across programs, and would likely conflict with the generally accepted auditing standards, which require auditors to use their professional judgment about the level of testing necessary for any particular entity. Moreover, recipients were concerned that the exception that allowed Federal agencies to add back requirements that they felt were necessary for the program would result in even more administrative burden.

One popular observation, particularly from state governments, was that in earlier iterations of discussions on these topics a reform idea was to eliminate certain types of compliance requirements altogether; many of these commenters argued that this elimination could be a clean way to reduce burden across programs.

As a result of this feedback, OMB proposes to limit the types of compliance requirements in the compliance supplement to the following group of key compliance requirements which, if violated, are most likely to result in improper payments, waste, fraud, or abuse. This approach is consistent with early recommendations received and OMB's October 2009 Single Audit Internal Control Project for American Recovery and Reinvestment Act (ARRA), which limited testing to the following basic types of compliance requirements: [1]

A. *Activities Allowed or Unallowed* and B. *Allowable Costs/Cost Principles* (combined)—The amounts reported as expenditures and claimed for matching will be tested for allowable activities and charges that were reasonable, allowable, and allocable under applicable OMB guidance and terms and conditions of award or grant agreement. Some review of H. *Period of Availability of Federal Funds* would likely be incorporated in a determination of allowability under this requirement. The *Matching* part of G. *Matching, Level of Effort, and Earmarking* would also be covered, since testing under this requirement will include a determination of whether costs claimed for matching are allowable, allocable, and reasonable. Documentation of appropriate matching claimed would still be reviewed under L. *Reporting.*

C. *Cash Management*—The non-federal entity followed procedures to minimize the time elapsing between the transfer of funds from the U.S. Treasury, or pass-through entity, and their disbursement.

E. *Eligibility*—The records show that those who received services or benefits, either directly or on behalf of someone else, were eligible to receive them: benefits were provided in the right amount, to the right person, for the right purpose, and at the right time.

L. *Reporting*—Federal financial reports, performance reporting, claims for advances and reimbursement, and amounts claimed as matching are accurate and include all activity of the reporting period, are supported by applicable accounting records, and are fairly presented in accordance with program requirements. As noted above, this would include review of documentation of amount reported for matching.

M. *Subrecipient Monitoring*—The pass-through entity (1) Made sub-awards only to eligible entities, (2) identified awards, compliance requirements, and payments to the subrecipient prior to disbursement, (3) monitored subrecipient activities to ensure subrecipient compliance, and (4) performed the audit resolution function (e.g., ensured proper audit submitted on time, followed up on audit findings, including issuance of a management decision, and ensuring that subrecipients took timely and appropriate corrective action).

N. *Special Tests and Provision*—Requirements that are unique to each federal program and are found in the laws, regulations, and the provisions of contract or grant agreements pertaining to the program which could have a direct and material effect on a major program.

The seven compliance requirements that would be eliminated from the compliance supplement would be D. *Davis Bacon,* F. *Equipment and Real Property Management,* the latter two components of G. *Matching, Level of Effort, and Earmarking,* H. *Period of Availability of Federal Funds* except where tested to verify allowable/unallowable costs, I. *Procurement and Suspension and Debarment,* J. *Program Income* and K. *Real Property Acquisition and Relocation Assistance.*

In order to accommodate programs where these requirements are essential to the oversight of the program and required by statute or regulation, OMB will consider requests from agencies to add one or more of these requirements back under special tests and provisions. Such requests for inclusion would only be accepted when compliance is required by statute or regulation, and when the federal agency (1) makes a strong case for how non-compliance

[1] The letter references are to the references used for the types of compliance requirements in the OMB Circular A–I33 Compliance Supplement.

with these types of requirements could result in increased risk of improper payments, waste, fraud, or abuse; and (2) provides a targeted compliance supplement write-up identifying improper-payment risks and focusing audit tests to address these risks. If adopted, OMB will take appropriate steps to ensure consistency between programs for the same compliance requirement.

OMB believes that this approach will focus Single Audit resources where the risks to financial integrity are greatest and eliminate the more minute detail from audit reports that distracts agencies from identifying and addressing significant weaknesses in programs. This change is not reflected in the draft proposal but would be implemented through the first Compliance Supplement to be issued after the proposed change becomes final.

3. Strengthening the guidance on audit follow-up for Federal awarding agencies. Section__.713 Responsibilities

The ANPG discussed various policy options to strengthen audit follow-up at the Federal agency level. Ideas contemplated included:

- Requiring agencies to designate a senior accountable agency official to oversee the audit resolution process;
- Requiring agencies to implement audit-risk metrics including timeliness of report submission, number of audits that did not have an unqualified auditor opinion on major programs, and number of repeat audit findings;
- Encouraging agencies to engage in cooperative audit resolution with recipients; and
- Encouraging agencies to take a pro-active approach to resolving weaknesses and deficiencies, whether they are identified with single specific programs or cut across the systems of an audited recipient.

Further, to improve audit follow-up, the notice contemplated digitizing Single Audit reports into a searchable database to support analysis of audit results by Federal agencies and pass-through entities.

The goal of these reforms is to strengthen audit resolution policies to result in agencies taking a more pro-active and collaborative approach towards following-up on audit findings, which should result in a decrease in audit findings and program risk over time. Combined with the reforms above to focus the Single Audit on the major programs and types of compliance requirements likely to result in the greatest risk of waste, fraud, and abuse, this reform would strengthen the oversight and response to those high-risk findings that were identified. As underlying programmatic weaknesses are resolved and repeat findings reduced, both recipients' and agencies' audit burdens would be lessened.

Comments received in response to these ideas were generally positive, and this proposal includes language on these ideas in section .713 Responsibilities. One additional suggestion OMB received was to consider making audit reports publicly available through the Federal Audit Clearinghouse. OMB acknowledges that making these reports public would reduce burden on the pass-through entities as they work to follow-up with subrecipients to obtain reports needed for oversight. OMB will work with the Federal Audit Clearinghouse to determine if privacy concerns over personally-identifiable information and confidential-business information can be overcome. One idea is that these concerns could be addressed by explicitly placing the responsibility on non-Federal entity uploading the reports to ensure that no such information is included. OMB has included draft language in this proposal section. 713 Responsibilities to reflect the possibility that these concerns will be sufficiently resolved.

OMB will consider providing additional guidance on agency use of cooperative audit-resolution mechanisms and metrics to track audit effectiveness in order to ensure agencies are held accountable for improvements to use of the Single Audit process. OMB believes that taken together these steps will result in a more robust single audit framework providing strong oversight over high-risk programs, entities, and findings and providing incentives for prompt corrective action to strengthen the overall integrity of our Federal financial-assistance programs.

4. Reducing burden on pass-through entities and subrecipients by ensuring across-agency coordination. Section .713 Responsibilities

The ANPG discussed strengthening language that would reinforce cross-agency coordination of audits and audit follow-up.

The goal is to reduce redundancy and burden by making more explicit the existing requirement that the Federal cognizant or oversight agency coordinate audits or reviews by other Federal awarding agencies that are made in addition to the Single Audit. This proposed change would not affect the ability of Inspectors General to conduct audit work as deemed necessary in accordance with the Inspector General Act of 1978, as amended.

This proposal includes language to this effect in section .713 Responsibilities, which, though not a change in policy, makes clear that it is the responsibility of the cognizant or oversight agency to coordinate audits or reviews by other Federal agencies that are made in addition to the Single Audit.

5. Reducing burdens on pass-through entities and subrecipients from audit follow-up. Section .713 Responsibilities

The ANPG discussed the idea that for subrecipients receiving a majority of their awards directly from the Federal government, the Federal cognizant or oversight agency might be the most appropriate entity to conduct follow-up on audit findings that cut across multiple programs.

The goal of this reform is to eliminate duplicative audit follow-up work performed by a pass-through entity without providing significant additional work to Federal agencies that already will be following up on these same audit findings, as well as to simplify the follow-up for the subrecipient.

Comments received in response to this reform were generally positive, though some commenters particularly in the university community argued that pass-through entities should not be at all responsible for conducting audit follow-up for subrecipients that receive a majority of their funds directly.

This proposal attempts to address this issue at both the Federal and pass-through level by making management decisions available through the Federal Audit Clearinghouse, on the possibility that privacy-related concerns articulated above can be resolved. This proposal articulates that the cognizant or oversight agency will provide management decisions for all findings in which it has funds directly implicated, and will make those management decisions publicly available so that other Federal awarding agencies and pass-through entities may decide to rely on them, or may decide to issue their own decisions, as appropriate. This should streamline the audit-resolution process and result in relieved administrative burden both for the Federal awarding agencies and pass-through entities as well as for the subrecipient.

6. Additional ideas for audit requirements

In response to the ANPG, OMB received a number of additional suggestions for ways that existing guidance on audit requirements could be clarified. OMB reviewed these and anticipates that clarifications made in

the draft language in Subchapter G—Audit Requirements will address many of them.

One additional idea for reform suggested by many in the Federal agency and audit community was to reduce the amount of time for audit submission from the current nine months down to three months or six months. OMB supports this idea, but notes that it will require changes to legislation to accomplish.

D. Additional Suggestions Outside of the Scope of This Proposed Guidance

In addition to the ideas discussed above, OMB received many ideas for reforms to Federal grant policies which have merit but are not properly addressed through changes to governmentwide guidance. Some of these ideas include better coordination of regulations that are applicable or have an impact on Federal grant; use of the Federal rule-making process for agency grants policies; improvements in data quality across systems that support the Federal grants community; looking at regulations governing electronic imaging for documents for both grants and contracts; facilitating better coordination, consistency, and transparency between indirect cost rate setting agencies; and improving the training available to Federal grants professionals. OMB is committed to continuing improvements in the policies, practices, and systems that support the Federal grants community under the continuing leadership of the COFAR. OMB and the COFAR will continue to work together to reach out to stakeholders to continue these discussions and to evaluate where further improvements may continue to be made.

Daniel I. Werfel,

Controller.

[FR Doc. 2013–02113 Filed 1–31–13; 8:45 am]

BILLING CODE P

DEPARTMENT OF ENERGY

10 CFR Part 431

[Docket No. EERE–2013–BT–STD–0007]

RIN 1904–AC95

Energy Conservation Program: Energy Conservation Standards for Small, Large, and Very Large Commercial Package Air Conditioning and Heating Equipment

AGENCY: Office of Energy Efficiency and Renewable Energy, Department of Energy.

ACTION: Request for information (RFI) and notice of document availability.

SUMMARY: Pursuant to the American Energy Manufacturing Technical Corrections Act, the U.S. Department of Energy (DOE) is initiating an effort to determine whether to amend the current energy conservation standards for certain commercial air-conditioning and heating equipment. This notice seeks to solicit information from the public to help DOE determine whether national standards more stringent than those that are currently in place would result in a significant amount of additional energy savings and whether those national standards would be technologically feasible and economically justified. Separately, DOE also seeks information from the public on the merits of adopting the integrated energy efficiency ratio (IEER) as the energy efficiency descriptor for small, large, and very large air-cooled commercial air conditioners and heat pumps.

DATES: Written comments and information are requested on or before March 4, 2013.

ADDRESSES: Interested parties are encouraged to submit comments electronically. However, comments may be submitted by any of the following methods:

- *Federal eRulemaking Portal: www.regulations.gov.* Follow the instructions for submitting comments.
- *Email to the following address: CommPkgACHP2013STD0007@ee.doe.gov.* Include docket number EERE–2013–BT–STD–0007 and/or RIN 1904–AC95 in the subject line of the message. All comments should clearly identify the name, address, and, if appropriate, organization of the commenter.
- *Postal Mail:* Ms. Brenda Edwards, U.S. Department of Energy, Building Technologies Program, Mailstop EE–2J, Request for Information for Commercial Air Conditioners and Heat Pumps, Docket No. EERE–2013–BT–STD–0007 and/or RIN 1904–AC95, 1000 Independence Avenue SW., Washington, DC 20585–0121. Please submit one signed paper original.
- *Hand Delivery/Courier:* Ms. Brenda Edwards, U.S. Department of Energy, Building Technologies Program, Sixth Floor, 950 L'Enfant Plaza SW., Washington, DC 20024. Please submit one signed paper original.

Instructions: All submissions received must include the agency name and docket number and/or RIN for this rulemaking. No telefacsimilies (faxes) will be accepted.

Docket: The docket is available for review at *www.regulations.gov,* including **Federal Register** notices, public meeting attendees' lists and transcripts, comments, and other supporting documents/materials. All documents in the docket are listed in the *www.regulations.gov index.* However, not all documents listed in the index may be publicly available, such as information that is exempt from public disclosure.

A link to the docket Web page can be found at: *http://www.regulations.gov/#!docketDetail;D=EERE-2013-BT-STD-0007.* This Web page contains a link to the docket for this notice on the *www.regulations.gov* Web site. The *www.regulations.gov* Web page contains simple instructions on how to access all documents, including public comments, in the docket.

For information on how to submit a comment, review other public comments and the docket, or participate in the public meeting, contact Ms. Brenda Edwards at (202) 586–2945 or by email: *Brenda.Edwards@ee.doe.gov.*

FOR FURTHER INFORMATION CONTACT: Direct requests for additional information may be sent to Mr. Joshua Cocciardi, U.S. Department of Energy, Office of Energy Efficiency and Renewable Energy, Building Technologies Program, EE–2J, 1000 Independence Avenue SW., Washington, DC 20585–0121. Telephone: 202–287–1656. Email: *Joshua.Cocciardi@ee.doe.gov.*

Mr. Michael Kido, U.S. Department of Energy, Office of the General Counsel, Mailstop GC–71, 1000 Independence Avenue SW., Washington, DC 20585–0121. Telephone: (202) 586–9507. Email: *Michael.Kido@hq.doe.gov.*

For information on how to submit or review public comments, contact Ms. Brenda Edwards, U.S. Department of Energy, Office of Energy Efficiency and Renewable Energy, Building Technologies Program, Mailstop EE–2J, 1000 Independence Avenue SW., Washington, DC 20585–0121. Telephone: (202) 586–2945. Email: *Brenda.Edwards@ee.doe.gov.*

SUPPLEMENTARY INFORMATION:

Table of Contents

I. Introduction
II. Energy Efficiency Descriptors
III. Request for Information and Comments

I. Introduction

A. Authority

Title III, Part C [1] of the Energy Policy and Conservation Act of 1975 (EPCA or the Act), Public Law 94–163 (42 U.S.C. 6311–6317, as codified), added by

[1] For editorial reasons, upon codification in the U.S. Code, Part C was re-designated Part A–1.

Public Law 95–619, Title IV, § 441(a), established the Energy Conservation Program for Certain Industrial Equipment, which includes provisions covering the commercial heating and air-conditioning equipment that is the subject of this notice.[2] In general, this program addresses the energy efficiency of certain types of commercial and industrial equipment. Relevant provisions of the Act include definitions (42 U.S.C. 6311), energy conservation standards (42 U.S.C. 6313), test procedures (42 U.S.C. 6314), labelling provisions (42 U.S.C. 6315), and the authority to require information and reports from manufacturers (42 U.S.C. 6316).

Section 342(a) of EPCA concerns energy conservation standards for small, large, and very large, air-cooled commercial package air conditioning and heating equipment (also known generally as unitary air conditioning and heating equipment). (42 U.S.C. 6313(a)) This category of equipment has a rated capacity between 64,000 Btu/h and 760,000 Btu/h. The equipment is designed to heat and cool commercial buildings and is typically located on the building's rooftop. Section 5(b) of the American Energy Manufacturing Technical Corrections Act of 2012 (Pub. L. 112–210 (Dec. 18, 2012) (AEMTCA)) amended Section 342(a)(6) of EPCA, which concerns the amendment of energy conservation standards for certain types of commercial and industrial equipment. At issue here is the inclusion of a requirement for DOE to consider amending the standards for ''any covered equipment as to which more than 6 years has elapsed since the issuance of the most recent final rule establishing or amending a standard for the product as of the date of AEMTCA's enactment, December 18, 2012. (42 U.S.C. 6313(a)(6)(C)(vi)) DOE must issue either a notice of determination that the current standards do not need to be amended or a notice of proposed rulemaking containing proposed standards by December 31, 2013. See 42 U.S.C. 6313(a)(6)(C)(i) and (vi) (as amended by AEMTCA).[3]

For small, large, and very large air-cooled commercial package air conditioners (ACs) and heating pumps (HPs), the last final rule issued by DOE was on October 18, 2005, which codified both the amended standards for small and large equipment and the new standards for very large equipment set by the Energy Policy Act of 2005, Public Law 109–58 (Aug. 8, 2005) (EPAct 2005). 70 FR 60407. Consistent with the new requirements Congress enacted as part of AEMTCA, DOE is required to publish either a notice of determination that standards for these equipment types do not need to be amended, or a notice of proposed rulemaking proposing amended energy conservation standards for these equipment types.

In order to meet the new requirements added by AEMTCA, DOE is reviewing the standards that are already in place affecting those products listed in 42 U.S.C. 6313(a) for which more than six years have elapsed since the issuance of the most recent final rule. Under Section 6313(a), DOE must either adopt those standards developed by the American Society of Heating, Refrigerating, and Air-Conditioning Engineers (ASHRAE)—or to adopt levels more stringent than the ASHRAE levels if there is clear and convincing evidence in support of doing so. AEMTCA added to this procedure a specified deadline within which DOE must act with respect to those standards for which more than six years have elapsed since the issuance of the relevant final rule. (42 U.S.C. 6313(a)(6)(A)(i) and (vi)) Today's notice represents the initiation of the mandatory review process imposed by AEMTCA and seeks input from the public to assist DOE with its determination on whether to amend the current standards pertaining to small, large, and very large air-cooled commercial package air conditioners and heating equipment ranging in cooling capacity from 65,000 Btu/h to 760,000 Btu/h. In making this determination, DOE must evaluate whether there is clear and convincing evidence that more stringent national standards than the ones established pursuant to the ASHRAE-process described above would result in significant energy savings, be technologically feasible and economically justified. By statute, DOE may promulgate or amend existing energy conservation standards only if the resulting standards would (1) yield a significant savings in energy use and (2) be both technologically feasible and economically justified. The current Federal standards, for this equipment, are shown in Table 1.

TABLE 1—MINIMUM COOLING AND HEATING EFFICIENCY LEVELS FOR AIR-COOLED COMMERCIAL AIR CONDITIONERS AND HEAT PUMPS, ≥65,000 BTU/H AND <760,000 BTU/H

Equipment type	Cooling capacity	Sub-category	Heating type	Efficiency level	Compliance date
Small Commercial Packaged Air-Conditioning and Heating Equipment (Air-Cooled).	>=65,000 Btu/h and <135,000 Btu/h.	AC	No Heating or Electric Resistance Heating.	EER = 11.2	1/1/2010
			All Other Types of Heating.	EER = 11.0	1/1/2010
		HP	No Heating or Electric Resistance Heating.	EER = 11.0 COP = 3.3	1/1/2010
			All Other Types of Heating.	EER = 10.8 COP = 3.3	1/1/2010
Large Commercial Packaged Air-Conditioning and Heating Equipment (Air-Cooled).	>=135,000 Btu/h and <240,000 Btu/h.	AC	No Heating or Electric Resistance Heating.	EER = 11.0	1/1/2010
			All Other Types of Heating.	EER = 10.8	1/1/2010
		HP	No Heating or Electric Resistance Heating.	EER = 10.6 COP = 3.2	1/1/2010
			All Other Types of Heating.	EER = 10.4 COP = 3.2	1/1/2010

[2] All references to EPCA in this document refer to the statute as amended through the American Energy Manufacturing Technical Corrections Act of 2012, Public Law 112–210 (Dec. 18, 2012).

[3] Subparagraph (A) and subparagraph (B) refer to 42 U.S.C. 6313(a)(6).

TABLE 1—MINIMUM COOLING AND HEATING EFFICIENCY LEVELS FOR AIR-COOLED COMMERCIAL AIR CONDITIONERS AND HEAT PUMPS, ≥65,000 BTU/H AND <760,000 BTU/H—Continued

Equipment type	Cooling capacity	Sub-category	Heating type	Efficiency level	Compliance date
Very Large Commercial Packaged Air-Conditioning and Heating Equipment (Air-Cooled).	>=240,000 Btu/h and <760,000 Btu/h.	AC	No Heating or Electric Resistance Heating.	EER = 10.0	1/1/2010
			All Other Types of Heating.	EER = 9.8	1/1/2010
		HP	No Heating or Electric Resistance Heating.	EER = 9.5 COP = 3.2	1/1/2010
			All Other Types of Heating.	EER = 9.3 COP = 3.2	1/1/2010

A. Background

On October 29, 1999, ASHRAE and the Illuminating Engineering Society of North America (IESNA) adopted Standard 90.1–1999, which included amended efficiency levels for commercial air conditioners and heat pumps. DOE evaluated these efficiency levels and subsequently adopted levels affecting 18 different equipment categories in a 2001 final rule. 66 FR 3336 (Jan. 12, 2001). However, the final rule's notice also indicated that DOE planned to further evaluate commercial air-cooled air conditioners and heat pumps with rated capacities between 65,000 Btu/h and 240,000 Btu/h because the initial analyses indicated that more stringent standards would be technologically feasible and economically justified. Id. at 3349. On June 12, 2001, the Department published a Framework Document that described analytical approaches to evaluate energy conservation standards for these larger commercial air conditioners and heat pumps (i.e. capacities between 65,000 Btu/h and 240,000 Btu/h) and presented this analytical framework to stakeholders at a public workshop. On July 29, 2004, DOE issued an Advance Notice of Proposed Rulemaking (ANOPR) to solicit public comments on its preliminary analyses for this equipment. 69 FR 45461. Subsequently, Congress enacted EPAct 2005, which, among other things, established amended standards for small and large commercial air-cooled air conditioners and heat pumps and new standards for very large air-cooled air conditioners and heat pumps. As a result, EPAct 2005 displaced the rulemaking effort that DOE had already begun. DOE codified these new statutorily-prescribed standards on October 18, 2005. 70 FR 60407.

B. Rulemaking Process

DOE generally follows specific criteria when prescribing amended standards for covered equipment. See generally 42 U.S.C. 6313(a)(6)(B)–(C). An amended standard for covered equipment must be designed to achieve the maximum improvement in energy efficiency that is technologically feasible and economically justified. Furthermore, DOE may not adopt any amended standard that would not result in the significant conservation of energy. Moreover, DOE may not prescribe a standard for certain equipment, if (1) no test procedure has been established for the equipment, or (2) if DOE determines by rule that, in cases where a standard has been proposed, the proposed standard is not technologically feasible or economically justified. In deciding whether a proposed amended standard is economically justified, DOE must determine whether the benefits of the standard exceed its burdens. DOE must make this determination after receiving comments on the proposed standard, and by considering, to the greatest extent practicable, the following seven factors:

1. The economic impact of the standard on manufacturers and consumers of the equipment subject to the standard;

2. The savings in operating costs throughout the estimated average life of the covered equipment in the type (or class) compared to any increase in the price, initial charges, or maintenance expenses for the covered products that are likely to result from the imposition of the standard;

3. The total projected amount of energy savings, or as applicable, water savings, likely to result directly from the imposition of the standard;

4. Any lessening of the utility or the performance of the covered equipment likely to result from the imposition of the standard;

5. The impact of any lessening of competition, as determined in writing by the Attorney General, that is likely to result from the imposition of the standard;

6. The need for national energy and water conservation; and

7. Other factors the Secretary of Energy (Secretary) considers relevant. (See generally 42 U.S.C. 6313(a)(6)(B))

As part of this decision-making process, there must also be clear and convincing evidence that the adoption of a national standard that is more stringent than the level set by ASHRAE would result in the significant additional conservation of energy and is technologically feasible and economically justified. See generally 42 U.S.C. 6313(a)(6)(A). Accordingly, EPCA requires that there be clear and convincing evidence that the adoption of standards more stringent than those set by ASHRAE would lead to significant energy savings and that achieving those standards would be both technologically feasible and, separately, economically justified using the seven criteria listed above.

In assessing the appropriateness of amending the standards that are currently in place for small, large, and very large commercial air-cooled air conditioners and heat pumps, DOE is planning to conduct in-depth technical analyses in the following areas to meet the statutory criteria for prescribing amended standards: (1) Engineering; (2) energy use; (3) markups; (4) life-cycle cost and payback period; (5) national impacts; (6) manufacturer impacts; (7) emission impacts; (8) utility impacts; (9) employment impacts; and (10) regulatory impacts. These analyses are the same ones DOE routinely applies when evaluating potential standards for a given type of product or equipment. DOE will also conduct several other analyses that support those previously listed, including the market and technology assessment, the screening analysis (which contributes to the engineering analysis), and the shipments analysis (which contributes to the national impact analysis). As detailed throughout this RFI, DOE is specifically publishing this notice as the

first step in the analysis process and is specifically requesting input and data from interested parties to aid in the development of the technical analyses.

II. Energy Efficiency Descriptors

As part of this analysis, DOE is giving very serious consideration to the possible replacement of the existing efficiency descriptor (i.e., energy efficiency ratio (EER)) with a new energy-efficiency descriptor (i.e., integrated energy efficiency ratio (IEER)). Unlike the EER metric, which utilizes only the efficiency of equipment operating at full load conditions, IEER factors in the equipment's efficiency while operating at part-load conditions of 75%, 50%, and 25% of capacity as well as during full load. This is accomplished by weighting the full- and part-load efficiencies with the average amount of time operating at each loading point; IEER provides a more representative measure of the energy consumption in actual operation. Moreover, IEER incorporates variations of outside temperature from design temperatures for part-load operation that further increase the accuracy of the metric.

Since 2007, ASHRAE has been specifying in its Standard 90.1 the use of an energy efficiency metric that captures part-load performance. ASHRAE first published specifications for part-load energy efficiency in their Standard 90.1–2007 based on the integrated part load value (IPLV). In *Addendum's* from the 2008 Supplement to Standard 90.1–2007, ASHRAE replaced IPLV for commercial air conditioning and heat pump equipment with IEER, effective January 1, 2010. According to ASHRAE, that change was made to improve the accuracy when rating part-load performance of commercial air conditioning and heating equipment.[4]

EPCA authorizes DOE to establish ''energy conservation standards'' that set either a single performance standard or a single design requirement—not both. See 42 U.S.C. 6311(18). As such, DOE can choose to implement an energy conservation standard using one or the other. In the case of small, large, and very large commercial air-cooled ACs and HPs, ASHRAE Standard 90.1 recommends two performance requirements; EER and IEER. Because EPCA does not specify a particular metric that DOE must use when measuring the efficiency of the equipment at issue in this notice, changing that metric from one type (e.g. EER) to another (e.g. IEER) is permissible. DOE also notes that in amending standards for a given type of product or equipment, DOE must ensure that a potential new standard would not result in reduced stringency when compared to the current Federal standards. See, e.g. 74 FR 36322 and 42 U.S.C. 6313(a)(6)(B)(iii)(I).

As part of its consideration, DOE examined whether part-load performance is currently being used and accepted for rating commercial air conditioners and heat pumps. On January 2, 2009, the Environmental Protection Agency (EPA) issued a draft ENERGY STAR specification for Light Commercial Air Conditioners and Heat Pumps products, i.e., small and large air-cooled air conditioners and air-source heat pumps, which proposed to adopt IEER as part of the minimum energy efficiency criteria.[5] In a January 30, 2009 letter regarding EPA's draft, AHRI expressed support for IEER as well as for the ENERGY STAR program to adopt IEER. Recently, the Consortium for Energy Efficiency (CEE), an organization for energy efficiency advocates, has adopted IEER for its Tier 0, 1, and 2 efficiencies for unitary air conditioning and heat pump products, i.e., small, large, and very large air-, water-, and evaporatively-cooled air conditioners and air- and water-source heat pumps.[6]

IEER has also gained support through efforts such as DOE's Commercial Building Energy Alliance (CBEA) technology transfer program, which sponsors the High Performance Rooftop Unit Challenge (RTU Challenge). This program provides a market mechanism that reduces barriers for manufacturers to procure greater than 18-IEER 10-ton equipment and encourages the private sector to commit to adopt energy-efficient equipment. Carrier, Lennox, 7AC Technologies, and Rheem are participating in the RTU Challenge, while participant McQuay has already produced certified equipment that meets or exceeds 18 IEER. In conjunction with manufacturer support, fourteen CBEA-member private entities,[7] such as Target Corp., Macy's, Inc., McDonald's Corp., and others, have also signaled their support and indicated their strong interest in potentially purchasing high-efficiency rooftop units, a sign of their confidence in the RTU Challenge and its ability to use IEER to accurately portray the energy use of commercial air-cooler air conditioners and heat pumps in the field.

Lastly, DOE conducted a market analysis to compare the two metrics based on publicly available ratings of equipment currently available in the market. DOE is making available for comment a document that provides the methodology and results of the investigation of the relationship between IEER and EER for commercial air-cooled air conditioners and heat pumps with cooling capacities between 65,000 Btu/hr and 760,000 Btu/hr (i.e., 5 and 63 tons). In addition, it looks at the variance of heating efficiency (i.e., coefficient of performance or COP) with IEER and EER. The document is available at: *http://www1.eere.energy.gov/buildings/appliance_standards/product.aspx/productid/77.* Ultimately, if DOE were to decide after considering the comments in response to this notice to migrate to the IEER metric, DOE would transition the existing Federal energy conservation standards to the new metric by identifying the appropriate baseline energy-efficiency levels to use in the analysis. From that point forward, all of the technical and economic analyses would be conducted using the new metric, IEER, in the evaluation of potential amended energy conservation standards for small, large, and very large air-cooled ACs and HPs. Consequently, DOE seeks comments and data regarding its consideration of transitioning metrics and the analysis conducted on the currently available models.

III. Request for Information and Comments

In the next section, DOE identifies a variety of issues on which it seeks input and data in order to aid its development of the technical and economic analyses to determine whether amended energy conservation standards may be warranted. In addition, DOE welcomes comments on other issues relevant to the conduct of this rulemaking that may not specifically be identified in this notice.

A. Test Procedure

DOE recently reviewed and adopted amended test procedures for small,

[4] ASHRAE. ASHRAE Addenda. 2008 Supplement. *http://www.ashrae.org/File%20Library/docLib/Public/20090317_90_1_2007_supplement.pdf.*

[5] ENERGY STAR. Re: EPA Proposed Draft Energy Star Specification for Light Commercial HVAC Equipment. *http://www.energystar.gov/ia/partners/prod_development/revisions/downloads/lhvac/AHRI_Comments_D1.pdf.*

[6] Consortium for Energy Efficiency. CEE Commercial Unitary AC and HP Specification. *http://www.cee1.org/files/CEE_CommHVAC_UnitarySpec2012.pdf.*

[7] U.S. Department of Energy. Building Technologies Program. High Performance Rooftop Unit Challenge Fact Sheet. *http://apps1.eere.energy.gov/buildings/publications/pdfs/alliances/techspec_rtus.pdf.*

large, and very large, air-cooled commercial package air conditioning and heating equipment in a final rule published on May 16, 2012. 77 FR 28928. These test procedures incorporate by reference certain sections of the Air-Conditioning, Heating, and Refrigeration Institute's (AHRI) 2007 Standard for Performance Rating of Commercial and Industrial Unitary Air-Conditioning and Heat Pump Equipment (AHRI 340/360–2007) along with the addition of a handful of other additional testing specifications. AHRI is an industry trade group representing air conditioning, heating and refrigeration manufacturers.

In light of DOE's consideration to switch from EER to IEER, DOE conducted a preliminary review of the current Federal test procedures for small, large, and very large air-cooled ACs and HPs. As part of its final rule issued on May 16, 2012, DOE adopted AHRI Test Standard 340/360–2007. 77 FR 28928. DOE found that the methods and procedures for testing and rating equipment with an IEER already exist within its test procedure. However, DOE specifically seeks comment on any test procedure issues relating to IEER and the existing Federal procedures that DOE should consider as part of this rulemaking.

(A1) DOE requests comment on the existing DOE test procedure for small, large, and very large air-conditioning equipment and its suitability for establishing a performance rating based on IEER.

B. Market Assessment

The market and technology assessment provides information about the commercial air conditioner and heat pump industry that will be used throughout the rulemaking process. For example, this information will be used to determine whether the existing equipment class structure requires modification based on the statutory criteria for setting such classes and to explore the potential for technological improvements in the design and manufacturing of such equipment. The Department uses qualitative and quantitative information to assess the past and present industry structure and market characteristics. DOE will use existing market materials and literature from a variety of sources, including industry publications, trade journals, government agencies, and trade organizations. Additionally, DOE will consider conducting interviews with manufacturers to assess the overall market for commercial air conditioners and heat pumps.

The current equipment classes as established in EPAct 2005 for small, large, and very large, air-cooled ACs and HPs divide this equipment into twelve equipment classes characterized by rated cooling capacity, equipment type (air conditioner versus heat pump), and heating type. As a starting point, DOE plans to use the existing equipment class structure as shown in Table 1 of 10 CFR 431.97. However, DOE will consider additional equipment classes for capacities or other performance-related features that inherently effect efficiency and justify the establishment of a different energy conservation standard. For instance, additional equipment classes may be warranted to differentiate between split and packaged type units or to further segment the capacities of the equipment covered in this analysis.

(B1) DOE requests feedback on the current equipment classes and seeks information regarding other equipment classes it should consider for inclusion in its analysis.

C. Technology Options for Consideration

DOE uses information about existing and past technology options and prototype designs to help identify technologies that manufacturers could use to meet and/or exceed energy conservation standards. In consultation with interested parties, DOE intends to develop a list of technologies to consider in its analysis. Initially, this list will include all those technologies considered to be technologically feasible and will serve to establish the maximum technologically feasible design. DOE is currently considering the specific technologies and design options listed below.

- Electro-hydrodynamic enhanced heat transfer.
- Copper rotor motor with improved efficiency.
- Improved refrigerants.
- Evaporator coil area (keeping the number of coil rows the same).
- Condenser coil area (keeping the number of coil rows the same).
- Coil rows (keeping face area the same).
- Condenser fan diameters.
- Evaporator fan.
- Air leakage paths within the unit.
- Coil row (keeping coil heat transfer the same).
- Microchannel heat exchangers.
- Deep coil heat exchangers.
- Low-pressure-loss filters.
- High efficiency fan motors.
- High efficiency compressors.
- Multiple compressors.
- Thermal expansion valves.
- Electronic expansion valves.
- Air foil centrifugal fans.
- Backward-curved centrifugal fans.
- Synchronous (toothed) belts.
- Direct-drive fans.
- High efficiency propeller condenser.
- High-side solenoid valve or discharge line check-valve to minimize pressure equalization.
- Heat-pipes (for high latent loads).
- Sub-coolers.
- Demand-control ventilation strategy.

(C1) DOE seeks information related to these or other unlisted, efficiency improving technologies as to their applicability to the current market and how these technologies improve efficiency of small, large, and very large commercial air-cooler ACs and HPs as rated by AHRI 340/360–2007.

(C2) Additionally, DOE requests comment on which of the listed technologies and/or other technologies not mentioned that may preferentially improve the IEER more than the EER for commercial air conditioners and heat pumps.

D. Engineering Analysis

The engineering analysis estimates the cost-efficiency relationship of equipment at different levels of increased energy efficiency. This relationship serves as the basis for the cost-benefit calculations for commercial customers, manufacturers, and the nation. In determining the cost-efficiency relationship, DOE will estimate the increase in manufacturer cost associated with increasing the efficiency of equipment above the baseline to the maximum technologically feasible (''max-tech'') efficiency level for each equipment class. The baseline model is used as a reference point for each equipment class in the engineering analysis and the life-cycle cost and payback-period analyses. Typically, DOE would consider equipment that just meets the minimum energy conservation standard as baseline equipment. However, DOE is considering whether to replace the current cooling performance energy efficiency descriptor, EER, with IEER, and a single EER level can correspond to a range of IEERs. If DOE decides to transition to a new efficiency descriptor, DOE would have to establish a baseline IEER for each equipment class, and could consider the minimum, median, average, or maximum IEER in the applicable range.

(D1) DOE requests comment on approaches that it should consider when determining a baseline IEER for each equipment class, including

information regarding the merits and/or deficiencies of such approaches.

(D2) DOE also seeks comment on an appropriate baseline IEER for each equipment class and analysis supporting such selected baseline efficiency levels.

(D3) DOE requests information on max-tech efficiency levels achievable in the current market in terms of IEER, EER, and COP as applicable.

In order to create the cost-efficiency relationship, DOE anticipates that it will structure its engineering analysis using the reverse-engineering (or cost-assessment) approach. A reverse-engineering or cost-assessment approach relies on a teardown analysis of representative baseline efficient to highly efficient units that employ maximum technologically feasible designs. A teardown analysis (or physical teardown) determines the production cost of a piece of equipment by disassembling the equipment ''piece-by-piece'' and estimating the material and labor cost of each component. A supplementary method called a catalog teardown uses published manufacturer catalogs and supplementary component data to estimate the major physical differences between a piece of equipment that has been physically disassembled and another piece of similar equipment. These two methods would be used together to help DOE determine the cost effectiveness of any standards that it may consider as part of a standards rulemaking to amend the levels currently in place.

(D4) DOE requests feedback on using a reverse engineering approach supplemented with catalog teardowns and requests comment on what the appropriate representative capacities would be for each equipment class.

In the 2004 ANOPR, the Department proposed to address the energy efficiency of commercial air-cooled heat pumps by developing functions relating COP to EER. This method was also used by industry to establish minimum performance requirements for ASHRAE 90.1–1999. AHRI supplied the ASHRAE 90.1–1999 committee with curves relating the COP as a function of EER, and the committee then set the minimum COP levels based on EER. 69 FR 45460, 45468. Due to the previous acceptance of this method, DOE is considering a similar approach for this rulemaking. If DOE transitions to use IEER as the energy efficiency descriptor, then DOE may establish minimum COP levels based on IEER. DOE has conducted a market analysis and evaluated the relationship between IEER and COP in a technical support document published to coincide with this notice.[8] DOE recognizes that COP does not integrate part load efficiency and that a correlation between COP and IEER may not be robust for this reason.

(D5) DOE seeks information about potential issues related to using IEER as the cooling performance efficiency metric when developing a correlation between COP and IEER.

E. Markups Analysis

To carry out the life-cycle cost (LCC) and payback period (PBP) calculations, DOE needs to determine the cost to the commercial customer of baseline equipment that satisfies the currently applicable standards, and the cost of the more-efficient unit the customer would purchase under potential amended standards. By applying a multiplier called a ''markup'' to the manufacturer's selling price, DOE is able to estimate the commercial customer's price.

For DOE's 2004 ANOPR, two types of distribution channels were defined to describe how the equipment passes from the manufacturer to the customer. In the first distribution channel, the manufacturer sells the equipment to a wholesaler. The wholesaler sells the equipment to a mechanical contractor, who then sells it to a general contractor. In the final step to this first channel, the general contractor sells the equipment to the customer/end user (and installs it). In the second distribution channel, the manufacturer sells the equipment directly to the customer through a national account. 69 FR 45460, 45476. For this rulemaking, DOE intends to characterize the distribution of equipment with the same channels developed for the 2004 ANOPR, with modifications to reflect the current status of equipment distribution.

(E1) DOE seeks input from stakeholders on whether the distribution channels described above are still relevant for small and large air-cooled commercial air conditioners and heat pumps, and whether they are also relevant for very large air-cooled equipment.

Based on information that equipment manufacturers provided, commercial customers were estimated to purchase 50 percent of equipment through small mechanical contractors, 32.5 percent through large mechanical contractors, and the remaining 17.5 percent through national accounts. In addition, 30 percent of commercial air-conditioning equipment was estimated to be purchased for the new construction market while the remaining 70 percent was estimated to serve the replacement market. In the case of the replacement market, where equipment is purchased through a mechanical contractor, the mechanical contractor purchases equipment directly from the wholesaler (i.e., a general contractor is not involved). 69 FR 45460, 45476.

(E2) DOE seeks input on the percent of equipment being distributed through the various types of distribution channels, and whether the share of equipment through each channel varies based on equipment capacity.

To develop markups for the parties involved in the distribution of the equipment, DOE utilized several sources including: (1) The Air-conditioning & Refrigeration Wholesalers Association's 1998 Wholesaler PROFIT Survey Report to develop wholesaler markups, (2) the Air Conditioning Contractors of America's (ACCA) financial analysis for the heating, ventilation, air-conditioning, and refrigeration (HVACR) contracting industry to develop mechanical contractor markups, and (3) U.S. Census Bureau economic data for the commercial and institutional building construction industry to develop general contractor markups.

(D3) DOE seeks recent data to establish the markups for the parties involved with the distribution of the equipment addressed by today's notice.

F. Energy Use Analysis

The purpose of the energy use analysis is to assess the energy and peak demand savings potential of different equipment efficiencies in the building types that utilize the equipment. DOE intends to base the energy use analysis for the current effort on building simulation data compiled for the 2004 ANOPR. The simulation database includes hourly profiles for over 1,000 commercial buildings, which were based on building characteristics from the 1995 Commercial Building Energy Consumption Survey (CBECS) for the subset of buildings using the type of equipment covered by the standards. Each building was assigned to a specific location and a typical meteorological year hourly weather file (referred to as TMY2) was used to represent local weather. The simulations capture variability in cooling loads due to factors such as building activity, schedule, occupancy, local weather and shell characteristics. Because the building simulation data developed for the 2004 ANOPR are based on the 1995 CBECS, DOE intends to take a number of steps to update the building simulation database for this analytical effort and with any subsequent

[8] The document is available at: *http://www1.eere.energy.gov/buildings/appliance_standards/product.aspx/productid/77.*

proposed rulemaking that DOE may issue.

DOE intends to adjust the 1995 CBECS building weights to match the most recent CBECS (2003), and to account for changes to the distribution of total floor space by geographic region and building type. CBECS 2012 is currently in development but will not be available in time for DOE to use as part of its rulemaking effort. In addition, the 1995 CBECS sample may not include examples of recent innovations in building shell or window technologies that reduce cooling loads. DOE intends on reviewing other data sets, for example, the technology penetration curves used in the National Energy Modeling System (NEMS) commercial demand module,[9] to determine whether a significant fraction of the current building population is not represented by the building simulation database used for the 2004 ANOPR.

The TMY2 weather data set was updated in 2008 to TMY3. For each location in the building database, the two weather data sets will be compared to determine whether there has been a change to either the monthly maximum temperatures or monthly cooling degree days. DOE intends to adjust the estimated cooling loads and energy use accordingly.

The range of capacities covered by the current effort that DOE may consider is likely to be broader than that considered in the 2004 ANOPR, and includes much larger capacity units. For the 2004 ANOPR, a design day simulation was used to determine the total cooling capacity requirement for a building. The simulation assumed this would be met by a number of identical units of fixed capacity. The updated analysis will consider the possibility that a smaller number of larger capacity units may be used. Further, DOE intends to apply the building simulation database to very large equipment (i.e., equipment with capacities between 240,000 Btu/h and 760,000 Btu/h.)

DOE requests comment or seeks input from stakeholders on the following issues pertaining to the energy use analysis:

(F1) For different cooling technologies, the relationship between efficiency and the instantaneous load level;

(F2) The current distribution of equipment efficiencies in the building population;

(F3) For a given cooling load shape, how equipment energy use scales as a function of capacity, i.e., whether two air-conditioning units of a certain capacity use the same total cooling energy as one air-conditioning unit of twice the capacity; and

(F4) Whether the building simulations developed for small and large air-conditioning equipment are applicable to very large equipment.

G. Life-Cycle Cost and Payback Period Analysis

The purpose of the LCC and PBP analysis is to analyze the effects of potential amended energy conservation standards on customers of commercial air-cooled air-conditioning and heating equipment by determining how a potential amended standard would affect their operating expenses (usually decreased) and their total installed costs (usually increased).

DOE intends to analyze the potential for variability and uncertainty by performing the LCC and PBP calculations on a representative sample of individual commercial buildings. DOE plans to utilize the sample of buildings developed for the energy use analysis and the corresponding simulations results. Within a given building, one or more air-conditioning units may serve the building's space-conditioning needs, depending on the cooling load requirements of the building. As a result, the Department intends to express the LCC and PBP results as the number of ACs and HPs experiencing economic impacts of different magnitudes. DOE plans to model both the uncertainty and the variability in the inputs to the LCC and PBP analysis using Monte Carlo simulation and probability distributions. As a result, the LCC and PBP results will be displayed as distributions of impacts compared to the base case conditions.

(G1) DOE requests comment from stakeholders on the overall method that it intends to use when conducting the LCC and PBP analysis.

Inputs to the LCC and PBP analysis are categorized as: (1) Inputs for establishing the purchase expense, otherwise known as the total installed cost, and (2) inputs for calculating the operating expense.

The primary inputs for establishing the total installed cost are the baseline customer price, standard-level customer price increases, and installation costs. Baseline customer prices and standard-level customer price increases will be determined by applying markups to manufacturer price estimates. The installation cost is added to the customer price to arrive at a total installed cost. For DOE's 2004 ANOPR, DOE developed installation costs from RS Means *Mechanical Cost Data.* 69 FR 45460, 45480. DOE intends to develop installation costs for any potential rulemaking it may conduct for the equipment addressed by today's notice using the most recent RS Means data available. For the 2004 ANOPR, DOE varied installation cost as a function of equipment weight. Because weight tends to increase with equipment efficiency, installation cost increased with equipment efficiency. 69 FR 45460, 45481. DOE intends to develop similar relationships for this analysis and for any proposed rulemaking that may be issued.

(G2) DOE seeks input on the approach and data sources it intends to use to develop installation costs, specifically, its intention to use the most recent RS Means *Mechanical Cost Data* and to vary installation cost based on equipment weight.

The primary inputs for calculating the operating costs are equipment energy consumption and power demand, equipment efficiency, electricity prices and forecasts, maintenance and repair costs, equipment lifetime, and discount rates. Both equipment lifetime and discount rates are used to calculate the present value of future operating expenses.

The equipment energy consumption is the site energy use associated with providing space-conditioning to the building. The power demand is the maximum power requirement of the equipment (i.e., the peak demand) for a specific period of time. DOE intends to utilize updated building simulation results from its 2004 ANOPR to establish equipment energy use and demand.

For projecting equipment efficiency, DOE will use the most appropriate metric to characterize efficiency, whether it is EER or IEER. The building simulations conducted for the 2004 ANOPR assigned specific baseline and standard level EERs to the equipment to determine its corresponding energy consumption and peak demand. 69 FR 45460, 45482. If DOE utilizes an IEER as the metric for equipment efficiency, the updating of the building simulation results will address how equipment efficiency, expressed as IEER, will impact energy use and demand.

Electricity prices are the price per kilowatt-hour paid by each customer for electricity. For the 2004 ANOPR, DOE determined electricity prices based on tariffs from a representative sample of electric utilities. 69 FR 45460, 45481–82. This approach calculates energy

[9] The National Energy Modeling System (NEMS) is a computer-based, energy-economy modeling system of the U.S. designed and implemented by the Energy Information Administration (EIA) of the U.S. DOE.

expenses based on actual electricity prices that customers are paying. DOE intends to retain the tariff-based approach for its analysis and plans to update its electricity prices based on recent or current tariffs. Future electricity prices will likely be forecasted using trends from the Energy Information Administration's most recent Annual Energy Outlook.

(G3) DOE seeks comment on its tariff-based approach for developing electricity prices. DOE seeks input on specific data sources available for collecting tariffs.

Maintenance costs are costs associated with maintaining the operation of the equipment. For DOE's 2004 ANOPR, DOE developed maintenance costs from RS Means *Facilities Maintenance & Repair Cost Data.* 69 FR 45460, 45485. DOE intends to develop maintenance costs for its analysis using the most recent RS Means data available. For the 2004 ANOPR, DOE estimated that maintenance costs do not vary with equipment efficiency. 69 FR 45460, 45485. DOE intends to use the same assumption as part of its analysis in determining whether amending the current standards is appropriate under the statutory criteria.

(G4) DOE seeks input on the approach and data sources it intends to use to develop maintenance costs, specifically, its intention to use the most recent RS Means *Facilities Maintenance & Repair Cost Data* and in assuming that maintenance costs do not vary with equipment efficiency.

Repair costs are associated with repairing or replacing components that have failed. For the 2004 ANOPR, DOE estimated that repair costs varied as function of customer equipment price. 69 FR 45460, 45485. DOE intends to determine whether repair costs continue to vary with equipment prices as part of its determination analysis.

(G5) DOE seeks comment as to whether repair costs vary as a function of equipment price. DOE also requests any data or information on developing repair costs.

Equipment lifetime is the age at which the equipment is retired from service. For the 2004 ANOPR, DOE based equipment lifetime on a retirement function, which was based on the use of a Weibull probability distribution, with a resulting median lifetime of 15 years. 69 FR 45460, 45486. DOE intends to use the same retirement function for its analysis.

(G6) DOE seeks comment on its approach of using a Weibull probability distribution to characterize equipment lifetime. DOE also requests any data or information that demonstrates whether equipment lifetime has a median value of 15 years and whether equipment lifetime varies based on equipment class.

The discount rate is the rate at which future expenditures are discounted to establish their present value. For the 2004 ANOPR, DOE derived the discount rates by estimating the cost of capital of companies that purchase air-cooled air-conditioning equipment. 69 FR 45460, 45486–87. DOE intends to apply this approach for its analysis and to update its data sources for calculating the cost of capital of companies that purchase air-cooled air-conditioning equipment.

DOE measures LCC and PBP impacts of potential standard levels relative to a base case that reflects the likely market in the absence of amended standards. DOE plans to develop market-share efficiency data (i.e., the distribution of equipment shipments by efficiency) for the equipment classes DOE is considering, for the year in which compliance with any amended standards would be required.

(G7) DOE requests data on current efficiency market shares (of shipments) by equipment class, and also similar historic data. In particular, DOE needs efficiency data for very large equipment.

(G8) DOE also requests information on expected trends in efficiency over the next five years.

H. Shipments Analysis

DOE uses shipment projections by equipment class to calculate the national impacts of standards on energy consumption, net present value (NPV), and future manufacturer cash flows.

For the 2004 ANOPR, DOE developed a shipments model for small and large air-cooled air-conditioning and heating equipment driven by historical shipments data. 69 FR 45492. The accuracy of the shipments model is highly dependent on historical shipments data as the data is used not only to build up an equipment stock but also to calibrate the shipments model.

(H1) DOE seeks recent historical shipments data for small, large, and very large air conditioners and heat pumps. Because very large equipment were not considered in the 2004 ANOPR, DOE is especially in need of shipments data for this class of equipment.

The shipments model for the 2004 ANOPR considered three market segments: (1) New commercial buildings acquiring equipment, (2) existing buildings replacing broken equipment, and (3) existing buildings acquiring new equipment for the first time. It considered two stock categories: (1) Equipment that has received only normal maintenance repairs, and (2) equipment that has had its useful life extended through additional repairs. To determine whether a customer would choose to repair rather than replace their air-conditioning equipment, the shipments model explicitly accounted for the combined effects of changes in purchase price, annual operating cost, and the value of commercial floor space on the purchase versus repair decision. Changes to the purchase price and operating costs due to standards were the drivers for shipment estimates for the standards cases relative to the base case (the case without standards). Because purchase price had more of an effect on shipments than operating costs, standards case shipments estimated for the 2004 ANOPR were 0.2-percent to 5-percent lower than the base case, depending on the increased price associated with the standard level. Extended repairs, i.e., repairing the equipment rather than purchasing a new unit, accounted for 80-percent of the shipments decrease with the remaining 20-percent due to forgone shipments to new construction. DOE intends to utilize the same approach to develop the shipments model for this rulemaking

(H2) DOE requests comment on the approach it intends on using to develop the shipments model and shipments forecasts for this rulemaking.

For the 2004 ANOPR, DOE utilized U.S. Census Bureau data to establish historical new construction floor space as well as historical stock floor space. The Annual Energy Outlook was used to forecast both new construction and stock floor space. Together with historical equipment saturation data from CBECS, DOE was able to estimate shipments to the three market segments identified above. The utility function to estimate the repair versus replacement decision was based on income per square foot data from the Building Owners and Managers Association (BOMA) *Commercial Building Survey* reports, purchase price data estimated from the Bureau of Labor Statistics, and operating cost data derived from the LCC and PBP analysis. 69 FR 45493. DOE intends to update all of the above data sources for the development of the shipments model for its analysis.

(H3) DOE seeks input on the approach and data sources it intends to use in developing the shipments model and shipments forecasts for this analysis.

I. National Impact Analysis

The purpose of the national impact analysis (NIA) is to estimate aggregate impacts of potential efficiency standards at the national level. Impacts that DOE reports include the national energy savings (NES) from potential standards

and the national NPV of the total customer benefits.

To develop the NES, DOE calculates annual energy consumption for the base case and the standards cases. DOE calculates the annual energy consumption using per-unit annual energy use data multiplied by projected shipments.

To develop the national NPV of customer benefits from potential standards, DOE calculates annual energy expenditures and annual equipment expenditures for the base case and the standards cases. DOE calculates annual energy expenditures from annual energy consumption by incorporating forecasted energy prices, using shipment projections and average energy efficiency projections. DOE calculates annual equipment expenditures by multiplying the price per unit times the projected shipments. The difference each year between energy bill savings and increased equipment expenditures is the net savings or net costs.

A key component of DOE's estimates of NES and NPV are the equipment energy efficiencies forecasted over time for the base case and for each of the standards cases. For the 2004 ANOPR, DOE used a combination of historical commercial and residential equipment efficiency data to forecast efficiencies for the base case. To estimate the impact that standards have in the year compliance becomes required, DOE used a ''roll-up'' scenario which assumes that equipment efficiencies in the base case that do not meet the standard level under consideration would ''roll up'' to meet the new standard level and equipment shipments at efficiencies above the standard level under consideration are not affected. 69 FR 45460, 45489–90. DOE intends to use the same methods for conducting the NIA for this analysis.

(I1) In addition to historical efficiency data (see section III.H), DOE also requests information on expected trends in efficiency over the long run.

J. Submission of Comments

DOE invites all interested parties to submit in writing by March 4, 2013, comments and information on matters addressed in this notice and on other matters relevant to DOE's consideration of a new efficiency descriptor and amended energy conservations standard for commercial air-cooled air conditioners and heat pumps. After the close of the comment period, DOE will begin collecting data, conducting the analyses, and reviewing the public comments, as needed. These actions will be taken to aid in the development of a NOPR for commercial air-cooled air conditioners and heat pumps if DOE decides to replace EER with IEER and amend the standards for such equipment.

DOE considers public participation to be a very important part of the process for developing test procedures. DOE actively encourages the participation and interaction of the public during the comment period in each stage of the rulemaking process. Interactions with and between members of the public provide a balanced discussion of the issues and assist DOE in the rulemaking process. Anyone who wishes to be added to the DOE mailing list to receive future notices and information about this rulemaking should contact Ms. Brenda Edwards at (202) 586–2945, or via email at *Brenda.Edwards@ee.doe.gov.*

Issued in Washington, DC, on January 25, 2013.

Kathleen B. Hogan,

Deputy Assistant Secretary for Energy Efficiency, Energy Efficiency and Renewable Energy.

[FR Doc. 2013–02164 Filed 1–31–13; 8:45 am]

BILLING CODE 6450–01–P

DEPARTMENT OF ENERGY

10 CFR Part 431

[Docket No. EERE–2011–BT–STD–0031]

RIN 1904–AC54

Energy Efficiency Program for Commercial and Industrial Equipment: Public Meeting and Availability of the Framework Document for Commercial and Industrial Pumps

AGENCY: Office of Energy Efficiency and Renewable Energy, Department of Energy.

ACTION: Notice of public meeting and availability of the Framework Document.

SUMMARY: The U.S. Department of Energy (DOE) is considering energy conservation standards for commercial and industrial pumps. To inform interested parties and to facilitate this process, DOE has prepared a Framework Document that details the analytical approach and preliminary scope of the rulemaking, and identifies several issues on which DOE is particularly interested in receiving comments. DOE will hold a public meeting to discuss and receive comments on its planned analytical approach and issues it will address in this rulemaking proceeding. DOE welcomes written comments and relevant data from the public on any subject within the scope of this rulemaking. A copy of the Framework Document is available at: *http://www1.eere.energy.gov/buildings/appliance_standards/rulemaking.aspx/ruleid/14.*

DATES: *Meeting:* DOE will hold a public meeting on February 20, 2013 from 9:00 a.m. to 4:00 p.m. in Washington, DC. Additionally, DOE plans to conduct the public meeting via webinar. Registration information, participant instructions, and information about the capabilities available to webinar participants will be published on DOE's Web site at: *http://www1.eere.energy.gov/buildings/appliance_standards/rulemaking.aspx/ruleid/14.* Participants are responsible for ensuring their systems are compatible with the webinar software.

DOE must receive requests to speak at the public meeting before 4:00 p.m. February 13, 2013. DOE must receive an electronic copy of the statement with the name and, if appropriate, the organization of the presenter to be given at the public meeting before 4:00 p.m., February 15, 2013.

Comments: DOE will accept written comments, data, and information regarding the Framework Document before and after the public meeting, but no later than March 18, 2013.

ADDRESSES: The public meeting will be held at the U.S. Department of Energy, Forrestal Building, Room 8E–089, 1000 Independence Avenue SW., Washington, DC 20585–0121. Please note that foreign nationals planning to participate in the public meeting are subject to advance security screening procedures. If a foreign national wishes to participate in the public meeting, please inform DOE of this fact as soon as possible by contacting Ms. Brenda Edwards at (202) 586–2945 so that the necessary procedures can be completed. Please note that any person wishing to bring a laptop computer into the Forrestal Building will be required to obtain a property pass. Visitors should avoid bringing laptops, or allow an extra 45 minutes. As noted above, persons may also attend the public meeting via webinar.

Interested parties are encouraged to submit comments electronically by the following methods:

- *Federal eRulemaking Portal: www.regulations.gov.* Follow the instructions for submitting comments.
- *Email to the following address: Pumps2011STD0031@ee.doe.gov.* Include docket number EERE–2011–BT–STD–0031 and/or RIN 1904–AC54 in the subject line of the message. All comments should clearly identify the name, address, and, if appropriate,

organization of the commenter. Submit electronic comments in WordPerfect, Microsoft Word, PDF, or ASCII file format, and avoid the use of special characters or any form of encryption.

• *Postal Mail:* Ms. Brenda Edwards, U.S. Department of Energy, Building Technologies Program, Mailstop EE–2J, Framework Document for Commercial and Industrial Pumps, Docket No. EERE–2011–BT–STD–0031 and/or RIN 1904–AC54, 1000 Independence Avenue SW., Washington, DC 20585–0121. If possible, please submit all items on a compact disc (CD), in which case it is not necessary to include printed copies. [Please note that comments sent by mail are often delayed and may be damaged by mail screening processes.]

• *Hand Delivery/Courier:* Ms. Brenda Edwards, U.S. Department of Energy, Building Technologies Program, Sixth Floor, 950 L'Enfant Plaza SW., Washington, DC 20024. Telephone: (202) 586–2945. If possible, please submit all items on a CD, in which case it is not necessary to include printed copies.

• *Instructions:* All submissions received must include the agency name and docket number and/or RIN for this rulemaking. No telefacsimilies (faxes) will be accepted.

Docket: The docket is available for review at *http://www.regulations.gov/#!docketDetail;D=EERE-2011-BT-STD-0031,* and will include **Federal Register** notices, framework document, notice of proposed rulemaking, public meeting attendee lists and transcripts, comments, and other supporting documents/materials throughout the rulemaking process. The regulations.gov Web page contains simple instructions on how to access all documents, including public comments, in the docket. The docket can be accessed by searching for docket number EERE–2011–BT–STD–0031 on the regulations.gov Web site. All documents in the docket are listed in the *www.regulations.gov* index. However, not all documents listed in the index may be publicly available, such as information that is exempt from public disclosure.

For information on how to submit a comment, review other public comments and the docket, or participate in the public meeting, contact Ms. Brenda Edwards at (202) 586–2945 or by email: *Brenda.Edwards@ee.doe.gov.*

FOR FURTHER INFORMATION CONTACT:

Mr. Charles Llenza, U.S. Department of Energy, Office of Energy Efficiency and Renewable Energy, Building Technologies, EE–2J, 1000 Independence Avenue SW., Washington, DC 20585–0121. Telephone: (202) 586–2192. Email: *pumps@EE.Doe.Gov.*

Ms. Elizabeth Kohl, U.S. Department of Energy, Office of the General Counsel, GC–71, 1000 Independence Avenue SW., Washington, DC 20585–0121. Telephone: (202) 586–9507. Email: *Elizabeth.Kohl@hq.doe.gov.*

For information on how to submit or review public comments and on how to participate in the public meeting, contact Ms. Brenda Edwards, U.S. Department of Energy, Office of Energy Efficiency and Renewable Energy, Building Technologies Program, EE–2J, 1000 Independence Avenue SW., Washington, DC, 20585–0121. Telephone (202) 586–2945. Email: *Brenda.Edwards@ee.doe.gov.*

SUPPLEMENTARY INFORMATION: Title III of the Energy Policy and Conservation Act of 1975, as amended, (EPCA or the Act), Public Law 94–163, (42 U.S.C. 6291 *et. seq.*) sets forth a variety of provisions designed to improve energy efficiency.[1] Part C)[2] of Title III (42 U.S.C. 6311–6317) establishes an energy conservation program for certain industrial and commercial equipment. Section 6311(1)(A) includes pumps as ''covered equipment.'' DOE is authorized to set standards for pumps and to establish test procedures and prescribe labeling requirements for them. See 42 U.S.C. 6295(o); 6316(a); 6314; and 6315.

DOE has prepared the framework document to explain the relevant issues, analyses, and processes it anticipates using when considering new energy conservation standards for commercial and industrial pumps. The focus of the public meeting noted above will be to discuss the information presented and issues identified in the Framework Document. At the public meeting, DOE will make presentations and invite discussion on the rulemaking process as it applies to commercial and industrial pumps. DOE will also solicit comments, data, and information from participants and other interested parties.

DOE is planning to conduct in-depth technical analyses in the following areas: (1) Engineering, (2) energy use, (3) equipment price, (4) life-cycle cost and payback period, (5) national impacts, (6) manufacturer impacts, (7) emission impacts, (8) utility impacts, (9) employment impacts, and (10) regulatory impacts. DOE will also conduct several other analyses that support those previously listed, including the market and technology assessment, the screening analysis (which contributes to the engineering analysis), and the shipments analysis (which contributes to the national impact analysis).

DOE encourages those who wish to participate in the public meeting to obtain the Framework Document and to be prepared to discuss its contents. A copy of the Framework Document is available at: *http://www1.eere.energy.gov/buildings/appliance_standards/rulemaking.aspx/ruleid/14.*

Public meeting participants need not limit their comments to the issues identified in the framework document. DOE is also interested in comments on other relevant issues that participants believe would affect energy conservation standards for this equipment, applicable test procedures, or the preliminary determination on the scope of coverage. DOE invites all interested parties, whether or not they participate in the public meeting, to submit in writing by March 18, 2013, comments and information on matters addressed in the Framework Document and on other matters relevant to DOE's consideration of coverage and standards for commercial and industrial pumps.

The public meeting will be conducted in an informal, facilitated, conference style. There shall be no discussion of proprietary information, costs or prices, market shares, or other commercial matters regulated by U.S. antitrust laws. A court reporter will record the proceedings of the public meeting, after which a transcript will be available for purchase from the court reporter and placed on the DOE Web site at: *http://www1.eere.energy.gov/buildings/appliance_standards/rulemaking.aspx/ruleid/14.*

After the public meeting and the close of the comment period on the Framework Document, DOE will collect additional data, conduct the analyses as discussed in the Framework Document and at the public meeting, and review the public comments received.

DOE considers public participation to be a very important part of the process for determining whether to establish energy conservation standards and, if so, in setting those standards. DOE actively encourages the participation and interaction of the public during the comment period in each stage of the rulemaking process. Beginning with the Framework Document, and during each subsequent public meeting and comment period, interactions with and among members of the public provide a

[1] All references to EPCA in this document refer to the statute as amended through the American Energy Manufacturing Technical Corrections Act (AEMTCA), Public Law 112–210 (Dec. 18, 2012).

[2] For editorial reasons, upon codification in the U.S. Code, Part C was re-designated Part A–1.

balanced discussion of the issues to assist DOE in the standards rulemaking process. Accordingly, anyone who wishes to participate in the public meeting, receive meeting materials, or be added to the DOE mailing list to receive future notices and information about this rulemaking should contact Ms. Brenda Edwards at (202) 586–2945, or via email at *Brenda.Edwards@ee.doe.gov.*

Issued in Washington, DC, on January 25, 2013.

Kathleen B. Hogan,

Deputy Assistant Secretary for Energy Efficiency, Energy Efficiency and Renewable Energy.

[FR Doc. 2013–02171 Filed 1–31–13; 8:45 am]

BILLING CODE 6450–01–P

DEPARTMENT OF ENERGY

10 CFR Part 431

[Docket No. EERE–2013–BT–STD–0006]

RIN 1904–AC55

Energy Efficiency Program for Commercial and Industrial Equipment: Public Meeting and Availability of the Framework Document for Commercial and Industrial Fans and Blowers

AGENCY: Office of Energy Efficiency and Renewable Energy, Department of Energy.

ACTION: Notice of public meeting and availability of the Framework Document.

SUMMARY: The U.S. Department of Energy (DOE) is considering energy conservation standards for commercial and industrial fans and blowers. To inform interested parties and to facilitate this process, DOE has prepared a Framework Document that details the analytical approach and scope for this rulemaking and identifies several issues on which DOE is particularly interested in receiving comments. DOE will hold a public meeting to discuss and receive comments on its planned analytical approach and issues it will address in this rulemaking proceeding. DOE welcomes written comments and relevant data from the public on any subject within the scope of this rulemaking. A copy of the Framework Document is available at: *http://www1.eere.energy.gov/buildings/appliance_standards/rulemaking.aspx/ruleid/25*

DATES: *Comments:* DOE will accept written comments, data, and information regarding the Framework Document before and after the public meeting, but no later than March 18, 2013.

Meeting: DOE will hold a public meeting on February 21, 2013, from 9 a.m. to 4 p.m. in Washington, DC. Additionally, DOE plans to conduct the public meeting via webinar. Registration information, participant instructions, and information about the capabilities available to webinar participants will be published on DOE's Web site at: *http://www1.eere.energy.gov/buildings/appliance_standards/rulemaking.aspx/ruleid/25.* Participants are responsible for ensuring their systems are compatible with the webinar software.

DOE must receive requests to speak at the public meeting before 4:00 p.m., February 13, 2013. DOE must receive an electronic copy of the statement with the name and, if appropriate, the organization of the presenter to be given at the public meeting before 4:00 p.m., February 15, 2013.

ADDRESSES: The public meeting will be held at the U.S. Department of Energy, Forrestal Building, Room 8E–089 1000 Independence Avenue SW., Washington, DC 20585–0121. Please note that foreign nationals planning to participate in the public meeting are subject to advance security screening procedures. If a foreign national wishes to participate in the public meeting, please inform DOE of this fact as soon as possible by contacting Ms. Brenda Edwards at (202) 586–2945 so that the necessary procedures can be completed. Please note that any person wishing to bring a laptop computer into the Forrestal Building will be required to obtain a property pass. Visitors should avoid bringing laptops, or allow an extra 45 minutes. As noted above, persons may also attend the public meeting via webinar.

Interested parties are encouraged to submit comments electronically by the following methods:

- *Federal eRulemaking Portal: www.regulations.gov.* Follow the instructions for submitting comments.
- *Email to the following address: CIFB2013STD0006@ee.doe.gov.* Include docket number EERE–2013–BT–STD–0006 and/or RIN 1904–AC55 in the subject line of the message. All comments should clearly identify the name, address, and, if appropriate, organization of the commenter. Submit electronic comments in WordPerfect, Microsoft Word, PDF, or ASCII file format, and avoid the use of special characters or any form of encryption.
- *Postal Mail:* Ms. Brenda Edwards, U.S. Department of Energy, Building Technologies Program, Mailstop EE–2J, Framework Document for Commercial and Industrial Fans and Blowers, Docket No. EERE–2013–BT–STD–0006 and/or RIN 1904–AC55, 1000 Independence Avenue SW., Washington, DC 20585–0121. If possible, please submit all items on a compact disc (CD), in which case it is not necessary to include printed copies. [Please note that comments sent by mail are often delayed and may be damaged by mail screening processes.]
- *Hand Delivery/Courier:* Ms. Brenda Edwards, U.S. Department of Energy, Building Technologies Program, Sixth Floor, 950 L'Enfant Plaza SW., Washington, DC 20024. Telephone: (202) 586–2945. If possible, please submit all items on a CD, in which case it is not necessary to include printed copies.

Instructions: All submissions received must include the agency name and docket number and/or RIN for this rulemaking. No telefacsimilies (faxes) will be accepted.

Docket: The docket is available for review at *http://www.regulations.gov,* and will include **Federal Register** notices, framework document, notice of proposed rulemaking, public meeting attendee lists and transcripts, comments, and other supporting documents/materials generated throughout the rulemaking process. The regulations.gov Web page contains instructions on how to access all documents, including public comments, in the docket. The docket can be accessed by searching for docket number EERE–2013–BT–STD–0006 on the regulations.gov Web site. All documents in the docket are listed in the *www.regulations.gov* index. However, not all documents listed in the index may be publicly available, such as information that is exempt from public disclosure.

For information on how to submit a comment, review other public comments and the docket, or participate in the public meeting, contact Ms. Brenda Edwards at (202) 586–2945 or by email: *Brenda.Edwards@ee.doe.gov.*

FOR FURTHER INFORMATION CONTACT:

Mr. Charles Llenza, U.S. Department of Energy, Office of Energy Efficiency and Renewable Energy, Building Technologies, EE–2J, 1000 Independence Avenue SW., Washington, DC 20585–0121. Telephone: (202) 586–2192. Email: *CIFansBlowers@ee.doe.gov.*

Ms. Elizabeth Kohl, U.S. Department of Energy, Office of the General Counsel, GC–71, 1000 Independence Avenue SW., Washington, DC 20585–0121. Telephone: (202) 586–7796. Email: *Elizabeth.Kohl@hq.doe.gov.*

For information on how to submit or review public comments and on how to participate in the public meeting, contact Ms. Brenda Edwards, U.S. Department of Energy, Office of Energy Efficiency and Renewable Energy, Building Technologies Program, EE–2J, 1000 Independence Avenue SW., Washington, DC, 20585–0121. Telephone (202) 586–2945. Email: *Brenda.Edwards@ee.doe.gov.*

SUPPLEMENTARY INFORMATION: Title III of the Energy Policy and Conservation Act of 1975 (EPCA), as amended (42 U.S.C. 6291 *et seq.*), sets forth various provisions designed to improve energy efficiency. Part C of Title III of EPCA (42 U.S.C. 6311–6317), which was redesignated for editorial reasons as Part A–1 upon codification in the U.S. Code, establishes the ''Energy Conservation Program for Certain Industrial Equipment,'' which covers certain commercial and industrial equipment (hereafter referred to as ''covered equipment'').

EPCA specifies a list of equipment that constitutes covered commercial and industrial equipment. (42 U.S.C. 6311(1)(A)–(L). The list includes 11 types of equipment and a catch-all provision for certain other types of industrial equipment classified as covered the Secretary of Energy (Secretary). EPCA also specifies the types of equipment that can be classified as covered in addition to the equipment enumerated in 42 U.S.C. 6311(1). This equipment includes fans and blowers. (42 U.S.C. 6311(2)(B)) Industrial equipment must also be of a type that:

(1) Consumes, or is designed to consume, energy in operation;

(2) To any significant extent, is distributed in commerce for industrial or commercial use;

(3) Is not a covered product as defined in 42 U.S.C. 6291(a)(2) of EPCA, other than a component of a covered product with respect to which there is in effect a determination under 42 U.S.C. 6312(c).

(42 U.S.C. 6311 (2)(A)).

To classify equipment as covered commercial or industrial equipment, the Secretary must determine that classifying the equipment as covered equipment is necessary for the purposes of Part A–1 of EPCA. The purpose of Part A–1 is to improve the efficiency of electric motors, pumps and certain other industrial equipment to conserve the energy resources of the nation. (42 U.S.C. 6312 (b))

DOE has proposed to determine that the commercial and industrial fans and blowers (which DOE considers to be a type of fan with a specific ratio between 1.11 and 1.20) are covered equipment (76 FR 37678 (June 28, 2011)). DOE has developed a Framework Document in further consideration of that determination and any associated energy conservation standards for fans. DOE may consider standby and off mode energy use for commercial and industrial fans as part of this rulemaking because many commercial and industrial fans do not operate continuously.

DOE has prepared the Framework Document to explain the relevant issues, analyses, and processes it anticipates using to determine whether to establish energy conservation standards, and, if so, for the development of such standards. The focus of the public meeting noted above will be to discuss the information presented and issues identified in the Framework Document. At the public meeting, DOE will make presentations and invite discussion on the rulemaking process as it applies to commercial and industrial fans. DOE will also solicit comments, data, and information from participants and other interested parties.

DOE is planning to conduct in-depth technical analyses in the following areas: (1) Engineering, (2) energy-use characterization, (3) equipment price, (4) life-cycle cost and payback period, (5) national impacts, (6) manufacturer impacts, (7) utility impacts, (8) employment impacts, (9) emission impacts, and (10) regulatory impacts. DOE will also conduct several other analyses that support those previously listed, including the market and technology assessment, the screening analysis (which contributes to the engineering analysis), and the shipments analysis (which contributes to the national impact analysis).

DOE encourages those who wish to participate in the public meeting to obtain the Framework Document and to be prepared to discuss its contents. A copy of the Framework Document is available at: *http://www1.eere.energy.gov/buildings/appliance_standards/rulemaking.aspx/ruleid/25.*

Public meeting participants need not limit their comments to the issues identified in the Framework Document. DOE is also interested in comments on other relevant issues that participants believe would affect energy conservation standards for this equipment, applicable test procedures, or the preliminary determination on the scope of coverage. DOE invites all interested parties, whether or not they participate in the public meeting, to submit in writing by March 18, 2013, comments and information on matters addressed in the Framework Document and on other matters relevant to DOE's consideration of coverage and standards for commercial and industrial fans.

The public meeting will be conducted in an informal, facilitated, conference style. There shall be no discussion of proprietary information, costs or prices, market shares, or other commercial matters regulated by U.S. antitrust laws. A court reporter will record the proceedings of the public meeting, after which a transcript will be placed on the DOE Web site at: *http://www1.eere.energy.gov/buildings/appliance_standards/rulemaking.aspx/ruleid/25* and available for purchase from the court reporter.

After the public meeting and the close of the comment period on the Framework Document, DOE will collect additional data, conduct the analyses as discussed in the Framework Document and at the public meeting and review the public comments received.

DOE considers public participation to be a very important part of the process for determining whether to establish energy conservation standards and, if so, in setting those amended standards. DOE actively encourages the participation and interaction of the public during the comment period in each stage of the rulemaking process. Beginning with the Framework Document, and during each subsequent public meeting and comment period, interactions with and among members of the public provide a balanced discussion of the issues to assist DOE in the standards rulemaking process. Accordingly, anyone who wishes to participate in the public meeting, receive meeting materials, or be added to the DOE mailing list to receive future notices and information about this rulemaking should contact Ms. Brenda Edwards at (202) 586–2945, or via email at *Brenda.Edwards@ee.doe.gov.*

Issued in Washington, DC, on January 28, 2013.

Kathleen B. Hogan,

Deputy Assistant Secretary for Energy Efficiency, Energy Efficiency and Renewable Energy.

[FR Doc. 2013–02217 Filed 1–31–13; 8:45 am]

BILLING CODE 6450–01–P

DEPARTMENT OF TRANSPORTATION

Federal Aviation Administration

14 CFR Part 39

[Docket No. FAA–2013–0019; Directorate Identifier 2010–SW–051–AD]

RIN 2120–AA64

Airworthiness Directives; Bell Helicopter Textron Canada Helicopters

AGENCY: Federal Aviation Administration (FAA), DOT.

ACTION: Notice of proposed rulemaking (NPRM).

SUMMARY: We propose to adopt a new airworthiness directive (AD) for Bell Helicopter Textron Canada (BHTC) Model 407 helicopters with certain tailboom assemblies installed. This proposed AD would require, at specified intervals, inspecting the tailboom assembly for a crack, loose rivet, or other damage. This proposed AD is prompted by a stress analysis of the tailboom skin that revealed high-stress-concentration areas are susceptible to skin cracking. This condition, if not detected, could result in a crack in the tailboom assembly, failure of the tailboom, and subsequent loss of control of the helicopter.

DATES: We must receive comments on this proposed AD by April 2, 2013.

ADDRESSES: You may send comments by any of the following methods:

- *Federal eRulemaking Docket:* Go to *http://www.regulations.gov.* Follow the online instructions for sending your comments electronically.
- *Fax:* 202–493–2251.
- *Mail:* Send comments to the U.S. Department of Transportation, Docket Operations, M–30, West Building Ground Floor, Room W12–140, 1200 New Jersey Avenue SE., Washington, DC 20590–0001.
- *Hand Delivery:* Deliver to the ''Mail'' address between 9 a.m. and 5 p.m., Monday through Friday, except Federal holidays.

Examining the AD Docket

You may examine the AD docket on the Internet at *http://www.regulations.gov* or in person at the Docket Operations Office between 9 a.m. and 5 p.m., Monday through Friday, except Federal holidays. The AD docket contains this proposed AD, the economic evaluation, any comments received, and other information. The street address for the Docket Operations Office (telephone 800–647–5527) is in the **ADDRESSES** section. Comments will be available in the AD docket shortly after receipt.

For service information identified in this proposed AD, contact Bell Helicopter Textron Canada Limited, 12,800 Rue de l'Avenir, Mirabel, Quebec J7J1R4; telephone (450) 437–2862 or (800) 363–8023; fax (450) 433–0272; or at *http://www.bellcustomer.com/files/*. You may review a copy of the referenced service information at the FAA, Office of the Regional Counsel, Southwest Region, 2601 Meacham Blvd., Room 663, Fort Worth, Texas 76137.

FOR FURTHER INFORMATION CONTACT: Sharon Miles, Aerospace Engineer, FAA, Regulations and Policy Group, 2601 Meacham Blvd., Fort Worth, Texas 76137; telephone (817) 222–5110; fax (817) 222–5961; email *sharon.y.miles@faa.gov*.

SUPPLEMENTARY INFORMATION:

Comments Invited

We invite you to participate in this rulemaking by submitting written comments, data, or views. We also invite comments relating to the economic, environmental, energy, or federalism impacts that might result from adopting the proposals in this document. The most helpful comments reference a specific portion of the proposal, explain the reason for any recommended change, and include supporting data. To ensure the docket does not contain duplicate comments, commenters should send only one copy of written comments, or if comments are filed electronically, commenters should submit only one time.

We will file in the docket all comments that we receive, as well as a report summarizing each substantive public contact with FAA personnel concerning this proposed rulemaking. Before acting on this proposal, we will consider all comments we receive on or before the closing date for comments. We will consider comments filed after the comment period has closed if it is possible to do so without incurring expense or delay. We may change this proposal in light of the comments we receive.

Discussion

Transport Canada, which is the aviation authority for Canada, has issued AD CF–2009–07, dated March 6, 2009 (AD CF–2009–07), to correct an unsafe condition for the BHTC Model 407 helicopters with a tailboom assembly, part number (P/N) 407–030–801–201, –203, or –205. Transport Canada states that a stress analysis of the chemically milled tailboom skin ''revealed a possibility of skin cracking due to high stress concentration areas.'' Transport Canada advises that this condition, if not detected, could result in ''serious damage to the tailboom.''

FAA's Determination

These helicopters have been approved by the aviation authority of Canada and are approved for operation in the United States. Pursuant to our bilateral agreement with Canada, Transport Canada, its technical representative, has notified us of the unsafe condition described in its AD. We are proposing this AD because we evaluated all known relevant information and determined that an unsafe condition exists and is likely to exist or develop on other products of the same type design.

Related Service Information

BHTC has issued Alert Service Bulletin No. 407–08–84, dated August 18, 2008 (ASB), which specifies a new inspection schedule for the tailboom assemblies. BHTC states it has not received any field reports indicating cracked skin in service on the tailboom assemblies. However, in the interest of safety, BHTC states it has elected to introduce a new inspection schedule for the tailboom assemblies. The ASB specifies the new inspection schedule. Transport Canada classified this ASB as mandatory and issued AD CF–2009–07 to ensure the continued airworthiness of these helicopters.

Proposed AD Requirements

Unless accomplished previously, this proposed AD would require:

- Within 100 hours time-in-service (TIS) or at the next tailboom inspection, whichever comes first, and thereafter at intervals not to exceed 300 hours TIS, cleaning and inspecting the tailboom assembly for a loose rivet, a crack, or other damage. If there is a crack in the tailboom assembly, this proposed AD would require replacing it with an airworthy tailboom assembly before further flight.
- For helicopters with a tailboom assembly that has 6,900 or more hours TIS, this proposed AD would also require, within 25 hours TIS or 30 days, whichever occurs first, cleaning and inspecting the tailboom assembly for a crack, either by using a 10X or higher power magnifying glass (and thereafter repeating the 10X or higher power magnifying glass inspection at intervals not to exceed 150 hours TIS), or by eddy current inspection (and thereafter at intervals not to exceed 500 hours TIS).
- For helicopters with a tailboom assembly that has 8,600 or more hours TIS, or an unknown number of hours TIS, this proposed AD would also require either visually checking for a

crack before the first flight of each day, or cleaning and inspecting around each fastener and just above the edge of the upper stabilizer support within 25 hours TIS, or 30 days, whichever comes first, and thereafter at intervals not to exceed 50 hours TIS. The visual check may be performed by the owner/operator (pilot) holding at least a private pilot certificate, and must be entered into the aircraft records showing compliance with this AD. This authorization is an exception to our standard maintenance regulations.

Differences Between This Proposed AD and the Transport Canada AD

The Transport Canada AD states to perform the inspections of the tailboom ''in accordance with inspection procedures as per applicable part'' of the ASB. This proposed AD references only specific sections of the ASB for accomplishing the requirements.

Costs of Compliance

We estimate that this proposed AD would affect 551 helicopters of U.S. registry, and estimate the cost of compliance for the first year as follows:

- We assume 1 initial 100-hour TIS inspection and 2 recurring inspections, which would each take about 2.5 hours. At an average labor rate of $85 per hour, this would result in a cost of about $213 per inspection per helicopter or a total annual inspection cost for 3 recurring inspections of about $639 per helicopter.
- We assume 1 initial inspection and thereafter 4 recurring inspections per year for helicopters with a tailboom assembly that has 6,900 or more hours TIS, which would each take 3 hours at the average labor rate of $85 per hour or $255 per helicopter. Multiplying this $255 times the 5 recurring inspections, the total annual cost would be $1,275 per helicopter.
- We assume 1 initial inspection and 12 recurring inspections per year for helicopters with a tailboom assembly that has 8,600 or more hours TIS. If each inspection takes 3.25 hours, at the average labor rate of $85 per hour, each inspection would cost about $276. Multiply $276 times the 13 recurring inspections would result in a total annual inspection cost of $3,588 per helicopter. We expect the cost of pilot checks to be minimal.
- Replacing the tailboom would take 10 work hours at an average labor rate of $85 per hour for a total labor cost of $850 per helicopter. Parts would cost $82,850 for a total cost per helicopter of $83,700. Assuming that 5 helicopters per year would need a replacement tailboom, the fleet replacement cost would total $418,500.

Authority for This Rulemaking

Title 49 of the United States Code specifies the FAA's authority to issue rules on aviation safety. Subtitle I, section 106, describes the authority of the FAA Administrator. ''Subtitle VII: Aviation Programs,'' describes in more detail the scope of the Agency's authority.

We are issuing this rulemaking under the authority described in ''Subtitle VII, Part A, Subpart III, Section 44701: General requirements.'' Under that section, Congress charges the FAA with promoting safe flight of civil aircraft in air commerce by prescribing regulations for practices, methods, and procedures the Administrator finds necessary for safety in air commerce. This regulation is within the scope of that authority because it addresses an unsafe condition that is likely to exist or develop on products identified in this rulemaking action.

Regulatory Findings

We determined that this proposed AD would not have federalism implications under Executive Order 13132. This proposed AD would not have a substantial direct effect on the States, on the relationship between the national Government and the States, or on the distribution of power and responsibilities among the various levels of government.

For the reasons discussed, I certify this proposed regulation:

1. Is not a ''significant regulatory action'' under Executive Order 12866;
2. Is not a ''significant rule'' under the DOT Regulatory Policies and Procedures (44 FR 11034, February 26, 1979);
3. Will not affect intrastate aviation in Alaska to the extent that it justifies making a regulatory distinction; and
4. Will not have a significant economic impact, positive or negative, on a substantial number of small entities under the criteria of the Regulatory Flexibility Act.

We prepared an economic evaluation of the estimated costs to comply with this proposed AD and placed it in the AD docket.

List of Subjects in 14 CFR Part 39

Air transportation, Aircraft, Aviation safety, Incorporation by reference, Safety.

The Proposed Amendment

Accordingly, under the authority delegated to me by the Administrator, the FAA proposes to amend 14 CFR part 39 as follows:

PART 39—AIRWORTHINESS DIRECTIVES

■ 1. The authority citation for part 39 continues to read as follows:

Authority: 49 U.S.C. 106(g), 40113, 44701.

§ 39.13 [Amended]

■ 2. The FAA amends § 39.13 by adding the following new Airworthiness Directive (AD):

Bell Helicopter Textron Canada (BHTC): Docket No. FAA–2013–0019; Directorate Identifier 2010–SW–051–AD.

(a) Applicability

This AD applies to BHTC Model 407 helicopters, with tailboom assembly part number (P/N) 407–030–801–201, 407–030–801–203, or 407–030–801–205, certificated in any category.

(b) Unsafe Condition

This AD defines the unsafe condition as high-stress-concentration areas in the tailboom skin that are at risk of cracking. This condition could result in a crack in the tailboom assembly, failure of the tailboom, and subsequent loss of helicopter control.

(c) Compliance

You are responsible for performing each action required by this AD within the specified compliance time unless it has already been accomplished prior to that time.

(d) Required Actions

(1) For helicopters with a tailboom assembly that has 8,600 or more hours time-in-service (TIS):

(i) Comply with either paragraph (d)(1)(i)(A) or (d)(1)(i)(B):

(A) Before the first flight of each day, visually check for a crack in the ''C'' and ''D'' areas depicted in Figures 1 and 2 to Paragraph (d) of this AD. The actions required by this paragraph may be performed by the owner/operator (pilot) holding at least a private pilot certificate, and must be entered into the aircraft records showing compliance with this AD in accordance with 14 CFR 43.9 (a)(1)–(4) and 14 CFR 91.417(a)(2)(v). The record must be maintained as required by 14 CFR 91.417, 121.380, or 135.439; or

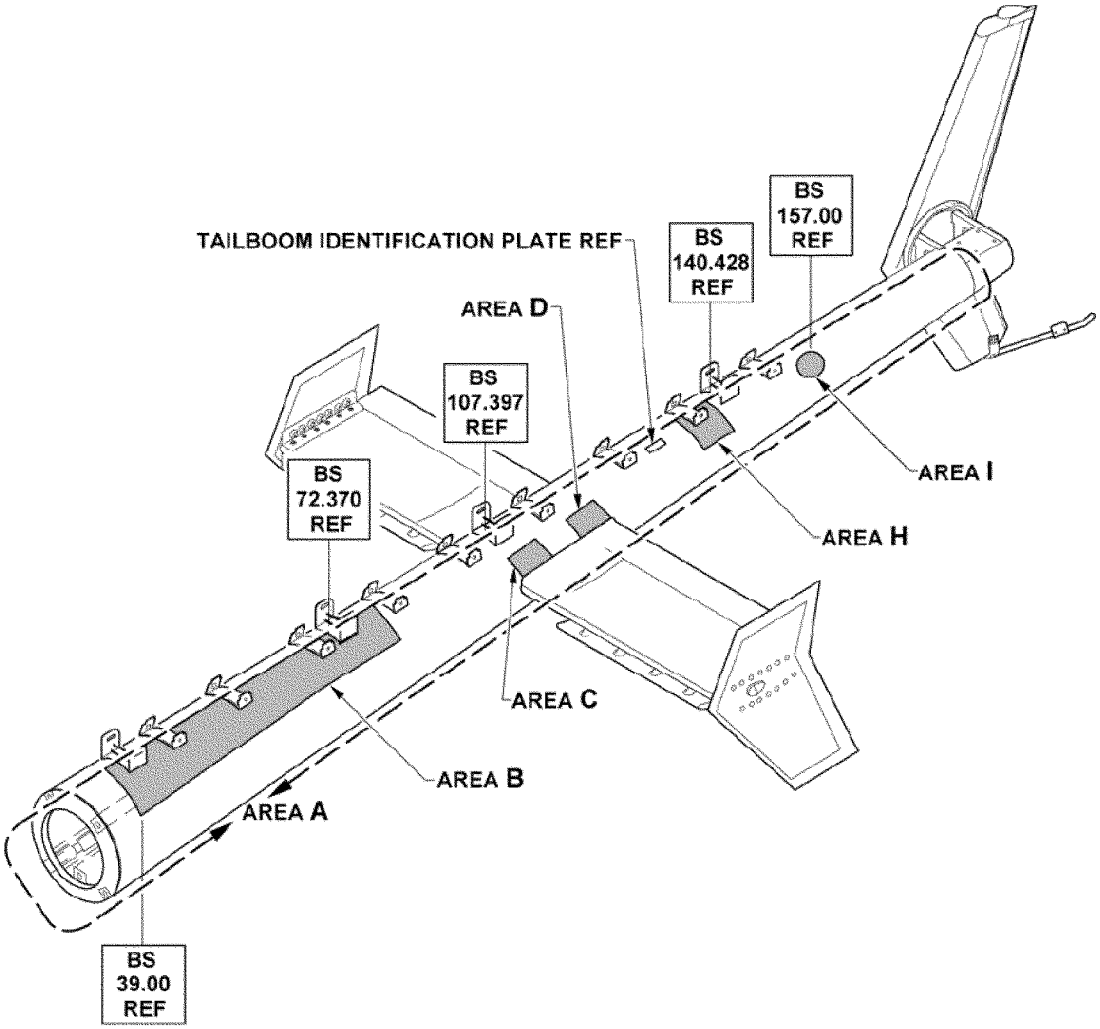

Figure 1 to Paragraph (d)

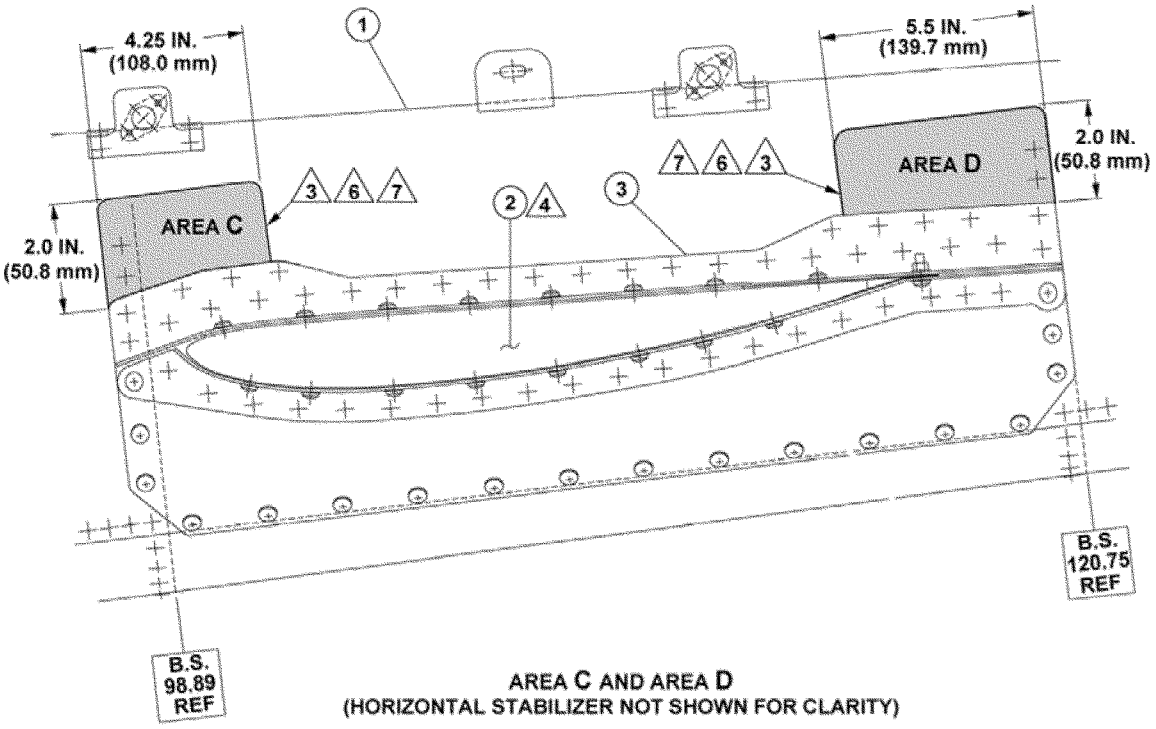

Figure 2 to Paragraph (d)

(B) Within 25 hours TIS, or 30 days, whichever comes first, and thereafter at intervals not to exceed 50 hours TIS, clean and inspect for a crack around each fastener and just above the edge of the upper stabilizer support in the ''C'' and ''D'' areas on the left side of the tailboom assembly, as depicted in Figure 2 to Paragraph (d) of this AD, using a 10X or higher power magnifying glass.

(ii) Comply with the requirements of paragraph (d)(2)(i)(A) or (d)(2)(i)(B), and paragraph (d)(3) of this AD.

(2) For helicopters with a tailboom assembly that has 6,900 or more hours TIS:

(i) Within 25 hours TIS or 30 days, whichever occurs first, clean and inspect the tailboom assembly for a crack in the ''H'' and ''I'' areas depicted in Figure 2, Sheet 5, of the BHTC Alert Service Bulletin No. 407–08–84, dated August 18, 2008, (ASB), by using one of the two following methods.

(A) Use a 10X or higher power magnifying glass; thereafter, repeat the 10X or higher power magnifying glass inspection at intervals not to exceed 150 hours TIS; or

(B) Eddy current inspect for a crack in accordance with Appendix A and Table 1, and by referencing Figures 3 through 7 of the ASB; thereafter, repeat the eddy current inspection at intervals not to exceed 500 hours TIS. Use a person qualified to Level II or Level III per the National Aerospace Standard (NAS) 410 or equivalent requirements to perform the eddy current inspection.

(ii) Comply with the requirements of paragraph (d)(3) of this AD.

(3) Within 100 hours TIS or at the next tailboom inspection, whichever comes first, and thereafter at intervals not to exceed 300 hours TIS:

(i) Clean and inspect the tailboom assembly for a loose rivet, a crack, or other damage in accordance with Part II, paragraphs 2 and 3, of the ASB; and

(ii) Using a 10X or higher power magnifying glass, inspect the tailboom assembly for a loose rivet or a crack in accordance with Part II, paragraphs 4 through 6, of the ASB.

(4) If the total accumulated hours TIS on the tailboom assembly is unknown, assume the tailboom assembly has 8,600 or more hours TIS and clean and inspect in accordance with paragraph (d)(1) of this AD.

(5) If there is a crack in the tailboom assembly, before further flight, replace it with an airworthy tailboom assembly.

(e) Special Flight Permit

Special flight permits may be issued in accordance with 14 CFR 21.197 and 21.199 to operate the helicopter to a location where the requirements of this AD can be accomplished, provided no passenger is on board and any crack or damage is temporarily repaired using FAA-approved procedures.

(f) Alternative Methods of Compliance (AMOC)

(1) The Manager, Safety Management Group, FAA, may approve AMOCs for this AD. Send your proposal to: Sharon Miles, Aerospace Engineer, FAA, Regulations and Policy Group, 2601 Meacham Blvd., Fort Worth, Texas 76137; telephone (817) 222–5110; fax (817) 222–5961; email *sharon.y.miles@faa.gov.*

(2) For operations conducted under a 14 CFR part 119 operating certificate or under 14 CFR part 91, subpart K, we suggest that you notify your principal inspector, or lacking a principal inspector, the manager of the local flight standards district office or certificate holding district office before operating any aircraft complying with this AD through an AMOC.

(g) Additional Information

The subject of this AD is addressed in Transport Canada Civil Aviation (TCCA) AD CF–2009–07, dated March 6, 2009.

(h) Subject

Joint Aircraft Service Component (JASC) Code: 5302, rotorcraft tailboom.

Issued in Fort Worth, Texas, on January 9, 2013.

Kim Smith,

Directorate Manager, Rotorcraft Directorate, Aircraft Certification Service.

[FR Doc. 2013–02253 Filed 1–31–13; 8:45 am]

BILLING CODE 4910–13–P

DEPARTMENT OF TRANSPORTATION

Federal Aviation Administration

14 CFR Part 39

[Docket No. FAA–2013–0021; Directorate Identifier 2010–SW–040–AD]

RIN 2120–AA64

Airworthiness Directives; Eurocopter Deutschland GmbH Helicopters

AGENCY: Federal Aviation Administration, DOT.

ACTION: Notice of proposed rulemaking (NPRM).

SUMMARY: We propose to adopt a new airworthiness directive (AD) for the Eurocopter Deutschland GmbH (Eurocopter) Model MBB–BK 117 C–2 helicopters. This proposed AD would require changing the direction of the bolt connecting the upper clevis bolt of a specific bellcrank in the main rotor assembly, repetitively inspecting the bearings in the bellcrank assemblies for correct staking, and replacing a bellcrank if a bearing is staked incorrectly. This proposed AD is prompted by improperly staked bellcrank bearings, which may cause the bellcrank to shift in the axial direction and cause chafing. The proposed actions are intended to prevent contact between the bolts on certain main rotor bellcranks, which could result in chafing and subsequent loss of control of the helicopter.

DATES: We must receive comments on this proposed AD by April 2, 2013.

ADDRESSES: You may send comments by any of the following methods:

- *Federal eRulemaking Docket:* Go to *http://www.regulations.gov.* Follow the online instructions for sending your comments electronically.
- *Fax:* 202–493–2251.
- *Mail:* Send comments to the U.S. Department of Transportation, Docket Operations, M–30, West Building Ground Floor, Room W12–140, 1200 New Jersey Avenue SE., Washington, DC 20590–0001.
- *Hand Delivery:* Deliver to the ''Mail'' address between 9 a.m. and 5 p.m., Monday through Friday, except Federal holidays.

Examining the AD Docket

You may examine the AD docket on the Internet at *http://www.regulations.gov* or in person at the Docket Operations Office between 9 a.m. and 5 p.m., Monday through Friday, except Federal holidays. The AD docket contains this proposed AD, the economic evaluation, any comments received, and other information. The street address for the Docket Operations Office (telephone 800–647–5527) is in the **ADDRESSES** section. Comments will be available in the AD docket shortly after receipt.

For service information identified in this proposed AD, contact American Eurocopter Corporation, 2701 N. Forum Drive, Grand Prairie, TX 75052; telephone (972) 641–0000 or (800) 232–0323; fax (972) 641–3775; or at *http://www.eurocopter.com/techpub.* You may review copies of the referenced service information at the FAA, Office of the Regional Counsel, Southwest Region, 2601 Meacham Blvd., Room 663, Fort Worth, Texas 76137.

FOR FURTHER INFORMATION CONTACT: Jim Grigg, ASW–112, Aviation Safety Engineer, Rotorcraft Directorate, Safety Management Group, 2601 Meacham Blvd., Fort Worth, Texas 76137, telephone (817) 222–5126, fax (817) 222–5961, email *Jim.Grigg@faa.gov.*

SUPPLEMENTARY INFORMATION:

Comments Invited

We invite you to participate in this rulemaking by submitting written comments, data, or views. We also invite comments relating to the economic, environmental, energy, or federalism impacts that might result from adopting the proposals in this document. The most helpful comments reference a specific portion of the proposal, explain the reason for any recommended change, and include supporting data. To ensure the docket does not contain duplicate comments, commenters should send only one copy of written comments, or if comments are filed electronically, commenters should submit only one time.

We will file in the docket all comments that we receive, as well as a report summarizing each substantive public contact with FAA personnel concerning this proposed rulemaking. Before acting on this proposal, we will consider all comments we receive on or before the closing date for comments. We will consider comments filed after the comment period has closed if it is possible to do so without incurring expense or delay. We may change this proposal in light of the comments we receive.

Discussion

The European Aviation Safety Agency (EASA), which is the Technical Agent for the Member States of the European Community, has issued EASA AD No. 2010–0045, 2nd Correction, dated March 30, 2010, to correct an unsafe condition for the Eurocopter Model MBB–BK 117 C–2 helicopters. EASA advises that during inspections on these model helicopters, bellcrank bearings have been discovered that were incorrectly staked. EASA advises that this condition, if not detected and corrected, may cause the affected bellcrank to shift in the axial direction and cause chafing. This could lead to interference between the bolts connecting the control rods to Bellcrank-Q and Bellcrank-K, possibly resulting in reduced control of the helicopter.

FAA's Determination

These helicopters have been approved by the aviation authority of the Federal Republic of Germany and are approved for operation in the United States. Pursuant to our bilateral agreement with the Federal Republic of Germany, EASA, its technical representative, has notified us of the unsafe condition described in its AD. We are proposing this AD because we evaluated all known relevant information and determined that an unsafe condition exists and is likely to exist or develop on other helicopters of the same type design.

Related Service Information

Eurocopter has issued Alert Service Bulletin No. MBB BK117 C–2–67A–011, Revision 1, dated February 23, 2010 (ASB), which specifies checking the attachment of the bearings, changing the direction of the bellcrank bolt, and, if necessary, replacing damaged parts. EASA classified this ASB as mandatory and issued EASA AD No. 2010–0045, 2nd Correction, dated March 30, 2010, to ensure the continued airworthiness of these helicopters.

Proposed AD Requirements

This proposed AD would require compliance with the Accomplishment Instructions, paragraph 3.B. and 3.C., of the manufacturer's service bulletin.

Differences Between This Proposed AD and the EASA AD

We refer to a check of the bearings as an inspection of the bearings. We require an inspection within 100 hours time-in-service rather than mandating a date or requiring that the part accumulate 50 flight hours after installation. We refer to the ''attachment'' of the bearings as ''staking'' of the bearings. We added the words ''chafing or corrosion'' to define damage to the parts. We do not mandate compliance with the entire ASB, but rather specific paragraphs.

Costs of Compliance

We estimate that this proposed AD would affect 96 helicopters of U.S. registry. We estimate that operators may incur the following costs in order to comply with this AD.

- 1 work hour to inspect the bolt, and
- 2 work hours to replace the bolt at an average labor rate of $85 per work hour.

Based on these figures ($85 × 3 hours), we estimate the total cost impact of the proposed AD on U.S. operators in the first year to be $255 per helicopter or $24,480 for the U.S. fleet.

If a bellcrank or bearing block is to be replaced, we estimate the following costs:

- 10 hours to change a bellcrank (assuming all 3 are replaced) for a labor cost of $850 per helicopter, and
- 10 hours to change a bearing block for a labor cost of $850 per helicopter.

Required parts would cost about:

- $4,632 for a Bellcrank-Q,
- $3,294 for a Bellcrank-K,
- $4,411 for a Bellcrank-L, and
- $1,150 for a bearing block.

Authority for This Rulemaking

Title 49 of the United States Code specifies the FAA's authority to issue rules on aviation safety. Subtitle I, section 106, describes the authority of the FAA Administrator. ''Subtitle VII: Aviation Programs,'' describes in more detail the scope of the Agency's authority.

We are issuing this rulemaking under the authority described in ''Subtitle VII, Part A, Subpart III, Section 44701: General requirements.'' Under that section, Congress charges the FAA with promoting safe flight of civil aircraft in air commerce by prescribing regulations for practices, methods, and procedures the Administrator finds necessary for safety in air commerce. This regulation is within the scope of that authority because it addresses an unsafe condition that is likely to exist or develop on products identified in this rulemaking action.

Regulatory Findings

We determined that this proposed AD would not have federalism implications under Executive Order 13132. This proposed AD would not have a substantial direct effect on the States, on the relationship between the national Government and the States, or on the distribution of power and responsibilities among the various levels of government.

For the reasons discussed, I certify this proposed regulation:

1. Is not a ''significant regulatory action'' under Executive Order 12866;

2. Is not a ''significant rule'' under the DOT Regulatory Policies and Procedures (44 FR 11034, February 26, 1979);

3. Will not affect intrastate aviation in Alaska to the extent that it justifies making a regulatory distinction; and

4. Will not have a significant economic impact, positive or negative, on a substantial number of small entities under the criteria of the Regulatory Flexibility Act.

We prepared an economic evaluation of the estimated costs to comply with this proposed AD and placed it in the AD docket.

List of Subjects in 14 CFR Part 39

Air transportation, Aircraft, Aviation safety, Incorporation by Reference, Safety.

The Proposed Amendment

Accordingly, under the authority delegated to me by the Administrator, the FAA proposes to amend 14 CFR part 39 as follows:

PART 39—AIRWORTHINESS DIRECTIVES

■ 1. The authority citation for part 39 continues to read as follows:

Authority: 49 U.S.C. 106(g), 40113, 44701.

§ 39.13 [Amended]

■ 2. The FAA amends § 39.13 by adding the following new Airworthiness Directive (AD):

Eurocopter Deutschland GmbH: Docket No. FAA–2013–0021; Directorate Identifier 2010–SW–040–AD.

(a) Applicability

This AD applies to Model MBB–BK 117 C–2 helicopters with Bellcrank-Q part number (P/N) B671M7004101, Bellcrank-K P/N B670M7021101, or Bellcrank-L P/N B671M7003101 installed, certificated in any category.

(b) Unsafe Condition

This AD defines the unsafe condition as interference between the connecting control rods to bolts on Bellcranks Q and K. This condition could result in chafing and subsequent loss of control of the helicopter.

(c) Compliance

You are responsible for performing each action required by this AD within the specified compliance time unless it has already been accomplished prior to that time.

(d) Required Actions

(1) Within 100 hours time-in-service (TIS), change the direction of the bolt connecting the upper clevis bolt of Bellcrank-Q as depicted in Figure 1 of Eurocopter Alert Service Bulletin No. MBB BK117 C–2–67A–011, Revision 1, dated February 23, 2010 (ASB), and by following the Accomplishment Instructions, paragraph 3.B. of the ASB.

(2) Thereafter, at intervals not to exceed 300 hours TIS, using a suitable light source and a mirror, inspect the bearings in the bellcrank assemblies for correct staking of the bearings as depicted in Figure 2 of the ASB. The bearings should be flush mounted, and there should be a space between the bellcrank and bearing block.

(3) If there is an incorrectly staked bearing, before further flight:

(i) Replace the bellcrank with an airworthy bellcrank; and

(ii) Inspect the bearing block for damage (a crack, deformation, mechanical damage, or corrosion). If damage exceeds allowable limits, replace the bearing block with an airworthy bearing block. If damage is within allowable limits, repair the bearing block.

(e) Alternative Methods of Compliance (AMOC)

(1) The Manager, Safety Management Group, FAA, may approve AMOCs for this AD. Send your proposal to: Jim Grigg, ASW–112, Aviation Safety Engineer, Rotorcraft Directorate, Safety Management Group, 2601 Meacham Blvd., Fort Worth, Texas 76137, telephone (817) 222–5126, fax (817) 222–5961, email *Jim.Grigg@faa.gov.*

(2) For operations conducted under 14 CFR part 119 operating certificate or under 14 CFR part 91, subpart K, we suggest that you notify your principal inspector, or lacking a principal inspector, the manager of the local flight standards district office or certificate holding district office before operating any aircraft complying with this AD through an AMOC.

(f) Additional Information

(1) For service information identified in this proposed AD, contact American Eurocopter Corporation, 2701 N. Forum Drive, Grand Prairie, TX 75052; telephone (972) 641–0000 or (800) 232–0323; fax (972) 641–3775; or at *http://www.eurocopter.com/techpub.* You may review copies of the referenced service information at the FAA, Office of the Regional Counsel, Southwest Region, 2601 Meacham Blvd., Room 663, Fort Worth, Texas 76137.

(2) The subject of this AD is addressed in EASA AD No. 2010–0045, 2nd Correction, dated March 30, 2010.

(g) Subject

Joint Aircraft System/Component (JASC) 6710: Bellcrank Bearings and Bearing Block.

Issued in Fort Worth, Texas, on January 9, 2013.

Kim Smith,

Directorate Manager, Rotorcraft Directorate, Aircraft Certification Service.

[FR Doc. 2013–02245 Filed 1–31–13; 8:45 am]

BILLING CODE 4910–13–P

DEPARTMENT OF THE TREASURY

Internal Revenue Service

26 CFR Part 1

[REG–148500–12]

RIN 1545–BL36

Shared Responsibility Payment for Not Maintaining Minimum Essential Coverage

AGENCY: Internal Revenue Service (IRS), Treasury.

ACTION: Notice of proposed rulemaking and notice of public hearing.

SUMMARY: This document contains proposed regulations relating to the requirement to maintain minimum essential coverage enacted by the Patient Protection and Affordable Care Act and the Health Care and Education Reconciliation Act of 2010, as amended by the TRICARE Affirmation Act and Public Law 111–173. These proposed regulations provide guidance on the liability for the shared responsibility payment for not maintaining minimum essential coverage. This document also provides notice of a public hearing on these proposed regulations.

DATES: Comments must be received by May 2, 2013. Outlines of topics to be discussed at the public hearing scheduled for May 29, 2013, at 10 a.m., must be received by May 3, 2013.

ADDRESSES: Send submissions to: CC:PA:LPD:PR (REG–148500–12), Room 5203, Internal Revenue Service, PO Box 7604, Ben Franklin Station, Washington, DC 20044. Submissions may be hand-delivered Monday through Friday between the hours of 8 a.m. and 4 p.m. to CC:PA:LPD:PR (REG–148500–12), Courier's Desk, Internal Revenue Service, 1111 Constitution Avenue NW., Washington, DC, or sent electronically via the Federal eRulemaking Portal at *www.regulations.gov* (IRS REG–148500–12). The public hearing will be held in the IRS Auditorium, Internal Revenue Building, 1111 Constitution Avenue NW., Washington, DC.

FOR FURTHER INFORMATION CONTACT: Concerning the proposed regulations, Sue-Jean Kim or John B. Lovelace, (202) 622–4960; concerning the submission of comments, the public hearing, and to be placed on the building access list to attend the public hearing, Oluwafunmilayo Taylor, (202) 622–7180 (not toll-free numbers).

SUPPLEMENTARY INFORMATION:

Paperwork Reduction Act

The collection of information contained in this notice of proposed rulemaking has been submitted to the Office of Management and Budget in accordance with the Paperwork Reduction Act of 1995 (44 U.S.C. 3507(d)). Comments on the collection of information should be sent to the Office of Management and Budget, Attn: Desk Officer for the Department of the Treasury, Office of Information and Regulatory Affairs, Washington, DC 20503, with copies to the Internal Revenue Service, Attn: IRS Reports Clearance Officer, SE:W:CAR:MP:T:T:SP, Washington, DC 20224.

Comments on the collection of information should be received by April 2, 2013. Comments are specifically requested concerning:

Whether the proposed collection of information is necessary for the proper performance of the functions of the IRS, including whether the information will have practical utility;

The accuracy of the estimated burden associated with the proposed collection of information;

How the quality, utility, and clarity of the information to be collected may be enhanced;

How the burden of complying with the proposed collection of information may be minimized, including through the application of automated collection techniques or other forms of information technology; and

Estimates of capital or start-up costs and costs of operation, maintenance, and purchase of services to provide information.

The collection of information in these proposed regulations is in § 1.5000A–3 and § 1.5000A–4. The collection of information is necessary to determine whether the shared responsibility payment provision applies to a taxpayer and compute any shared responsibility payment imposed on a taxpayer. The likely respondents are individuals required to file Federal income tax returns under section 6012(a)(1) of the Internal Revenue Code (Code).

The burden for the collection of information contained in proposed regulation § 1.5000A–3 and § 1.5000A–4 will be reflected in the burden on a form that the IRS will create to request the information in the proposed regulation.

An agency may not conduct or sponsor, and a person is not required to respond to, a collection of information unless it displays a valid control number assigned by the Office of Management and Budget.

Background

Under the Patient Protection and Affordable Care Act, Public Law 111–148 (124 Stat. 119 (2010)) and the Health Care and Education Reconciliation Act of 2010, Public Law 111–152 (124 Stat. 1029 (2010)) (collectively, the Affordable Care Act), the Federal government, State governments, insurers, employers, and individuals are entrusted with shared responsibility to reform and improve the availability, quality, and affordability of health insurance coverage in the United States. The Affordable Care Act expands Medicaid eligibility for residents of electing States and increases Federal funding for the expansion. The Affordable Care Act also provides individuals and small businesses the ability to purchase private health insurance through State-based, State Partnership, or Federally facilitated competitive market places called Affordable Insurance Exchanges (Exchanges). Through Exchanges, insurance companies will compete for business on a level playing field and qualified consumers will have a choice of health plans to fit their needs.

In addition, the Affordable Care Act includes various insurance market reforms to increase the ability of individuals to enroll in health insurance coverage regardless of preexisting conditions and to eliminate the ability of insurers to charge higher premium prices based on factors other than age, tobacco use, rating area, or family size. Moreover, the Affordable Care Act builds upon the existing private employer-based health insurance system to ensure continued access to high quality health insurance coverage at low cost.

Finally, to ensure effective and efficient implementation of the insurance market reforms, the Affordable Care Act requires a nonexempt individual to maintain minimum essential coverage or make a shared responsibility payment. Section 1501(b) of the Affordable Care Act added section 5000A to a new chapter 48 of subtitle D (Miscellaneous Excise Taxes) of the Code effective for months beginning after December 31, 2013. Section 5000A was subsequently amended by the TRICARE Affirmation Act of 2010, Public Law 111–159 (124 Stat. 1123) and Public Law 111–173 (124 Stat. 1215).

Shared Responsibility Payment for Not Maintaining Minimum Essential Coverage

Section 5000A provides nonexempt individuals with a choice: maintain minimum essential coverage for themselves and any nonexempt family members or include an additional payment with their Federal income tax return. Section 5000A(a) and section

5000A(b) provide that nonexempt individuals must have minimum essential coverage for each month beginning after December 31, 2013, or make an additional payment (the shared responsibility payment) with their Federal income tax return for the taxable year that includes such month. Under section 5000A(b)(3)(A), a taxpayer is liable for the shared responsibility payment if any nonexempt individual who may be claimed by the taxpayer as a dependent for a taxable year does not have minimum essential coverage in a month included in that taxable year. Married taxpayers filing a joint return for any taxable year are jointly liable for any shared responsibility payment imposed for the year.

Exempt Individuals

Many individuals are exempt from the shared responsibility payment, including some whose religious beliefs conflict with acceptance of the benefits of private or public insurance and those who do not have an affordable health insurance coverage option available. Section 1311(d)(4)(H) of the Affordable Care Act (42 U.S.C. 18031(d)(4)(H)) directs Exchanges to issue to qualified individuals certificates of exemption from the requirement to maintain minimum essential coverage or the shared responsibility payment under section 5000A. Section 1411 of the Affordable Care Act (42 U.S.C. 18081) generally provides procedures for determining an individual's eligibility for various benefits relating to health coverage, including exemptions from the application of section 5000A. The Department of Health and Human Services and the Department of the Treasury are working in close coordination to release regulations and other guidance related to Exchanges.

On March 27, 2012, the Department of Health and Human Services released final regulations related to the establishment of, and the standards applicable to, Exchanges (45 CFR 155.10 and following sections (Exchange regulations)). Section 155.200(b) of the Exchange regulations directs an Exchange to issue exemption certificates in accordance with sections 1311(d)(4)(H) and 1411 of the Affordable Care Act (42 U.S.C. 18031(d)(4)(H), 18081). The Department of Health and Human Services is publishing proposed regulations detailing the standards by which Exchanges will issue certificates of exemption under section 5000A. Patient Protection and Affordable Care Act; Exchange Functions: Eligibility for Exemptions; Minimum Essential Coverage Provisions (to be codified at 45 CFR 155.600 and following sections).

Section 5000A(d) and (e) describe individuals who are exempt from making the shared responsibility payment even if they do not have minimum essential coverage for a given month. Under section 5000A(d)(2)(A), an individual is exempt for a month for which an Exchange certifies that the individual is a member of a recognized religious sect or a division thereof described in section 1402(g)(1) and is an adherent of established tenets or teachings of that sect or division. Section 1402(g)(1) provides an exemption from self-employment tax for members of a qualified religious sect or division thereof. A qualified religious sect or division thereof described in section 1402(g)(1) is a sect or division thereof that the Commissioner of Social Security finds: (1) has established tenets or teachings by reason of which its members and adherents are conscientiously opposed to acceptance of the benefits of any private or public insurance that makes payments in the event of death, disability, old age, or retirement or makes payments toward the cost of, or provides services for, medical care (including the benefits of any insurance system established by the Social Security Act); (2) maintains, and has maintained for a substantial period of time, a practice whereby its members make provision for its dependent members that is reasonable in view of their general level of living; and (3) has been in existence at all times since December 31, 1950.

Section 5000A(d)(2)(B) provides that an individual is exempt for a month that the individual is a member of a health care sharing ministry. A health care sharing ministry is an organization: (1) which is described in section 501(c)(3) and exempt from tax under section 501(a); (2) members of which share a common set of ethical or religious beliefs and share medical expenses among themselves in accordance with those beliefs, and regardless of the State in which a member resides or is employed; (3) members of which retain membership even after they develop a medical condition; (4) which has itself (or a predecessor of which has) been in existence at all times since December 31, 1999; (5) members of which have continuously and without interruption shared medical expenses since at least December 31, 1999; and (6) which conducts an annual audit performed by an independent certified public accounting firm in accordance with generally accepted accounting principles the report of which is made available to members of the public upon request.

Section 5000A(d)(3) provides that an individual is exempt for a month that the individual is neither a citizen or national of the United States nor an alien lawfully present in the United States.

Section 5000A(d)(4) provides that an individual is exempt for a month that the individual is incarcerated, except for incarceration pending the disposition of charges.

Section 5000A(e)(1) provides that an individual is exempt for a month for which the individual lacks access to affordable minimum essential coverage. For this purpose, an individual lacks access to affordable coverage if the individual's required contribution (determined on an annual basis) for minimum essential coverage exceeds a percentage (8 percent for 2014) of the individual's household income for the most recent taxable year for which the Secretary of Health and Human Services, in consultation with the Secretary, determines information is available.

In general, section 5000A(c)(4)(B) defines a taxpayer's *household income* as the sum of the taxpayer's modified adjusted gross income and the modified adjusted gross income of any other member of a taxpayer's family (that is, individuals for whom the taxpayer properly claims a deduction under section 151 (relating to the personal exemption deduction)) who are required to file a Federal income tax return. Under section 5000A(c)(4)(C), *modified adjusted gross income* means adjusted gross income (within the meaning of section 62) increased by amounts excluded from gross income under section 911 and tax-exempt interest a taxpayer receives or accrues in the taxable year. Unlike section 36B(d)(2)(B), modified adjusted gross income for purposes of section 5000A does not include Social Security benefits that are not includable in gross income. For purposes of determining the affordability of minimum essential coverage under section 5000A(e)(1), the taxpayer's household income is increased by the portion of the required contribution made through a salary reduction arrangement and excluded from gross income.

For purposes of determining household income, a taxpayer's family includes all individuals for whom the taxpayer properly claims a personal exemption deduction under section 151 for the taxable year. *See also* § 1.36B–1(d). Taxpayers may claim a personal exemption deduction for themselves, a spouse, and each of their dependents.

Section 152 provides that a taxpayer's dependent may be a qualifying child or qualifying relative, including an unrelated individual who lives with the taxpayer.

For an employee eligible to purchase coverage under an eligible employer-sponsored plan, the required contribution for purposes of the exemption under section 5000A(e)(1) is the employee's share of the annual premium for self-only coverage. For an individual eligible to purchase coverage under an eligible employer-sponsored plan because the individual is related to an employee, the determination of whether the individual's coverage is affordable is made by reference to the employee's required contribution. For all individuals who are ineligible to purchase coverage under an eligible employer-sponsored plan, the required contribution is the annual premium for the lowest cost bronze plan available on the Exchange where the individual lives reduced by the credit allowable under section 36B for the taxable year (determined as if the individual enrolled in a plan through such Exchange for the entire taxable year).

Section 5000A(e)(2) provides that an individual is exempt for a month included in a calendar year if the individual's household income for the most recent taxable year for which information is available is less than the amount of gross income specified in section 6012(a)(1) for the taxpayer. Section 6012(a)(1) provides, for each filing status, gross income thresholds above which individuals are required to file Federal income tax returns.

As described in this preamble, income-based exemptions under section 5000A(e)(1) and section 5000A(e)(2) rely upon household income for the most recent taxable year that the Secretary of Health and Human Services, after consultation with the Secretary of Treasury, determines information is available. The Secretary of Health and Human Services, after consultation with the Secretary of the Treasury, determined that the household income for these exemptions that is available and relevant is the household income for the year for which an exemption is being claimed. See section III.A.3.b. of the preamble to Patient Protection and Affordable Care Act; Exchange Functions: Eligibility for Exemptions; Minimum Essential Coverage Provisions (to be codified at 45 CFR 155.600 and following sections, and 45 CFR 156.600 and following sections). The determination by the Secretary of Health and Human Services is reflected in the proposed regulations.

Section 5000A(e)(3) provides that an individual is exempt for a month that the individual is a member of an Indian tribe as defined in section 45A(c)(6). Section 45A(c)(6) describes certain Federally recognized Indian tribes (including any qualified Alaska Native village or regional or village corporation). The Federally recognized Indian tribes are listed in Indian Entities Recognized and Eligible to Receive Services from the United States Bureau of Indian Affairs, 75 FR 60810 (Oct. 1, 2010), as supplemented by 75 FR 661124 (Oct. 27, 2010), or its successor.

Under section 5000A(e)(4), an individual is exempt for a month the last day of which occurs in a period when the individual does not have minimum essential coverage for a continuous period of less than three months (a short coverage gap). The length of a gap in coverage is determined without regard to the calendar years in which months in the gap occur. If an individual has more than one short coverage gap in a calendar year, the exemption applies only to the earliest short coverage gap. Section 5000A(e)(4) authorizes the Secretary to issue regulations that provide for collecting the shared responsibility payment in cases where gaps in coverage straddle more than one taxable year.

Section 5000A(e)(5) provides that an individual is exempt for a month that the Exchange determines, in accordance with guidance promulgated by the Secretary of Health and Human Services, the individual suffered a hardship that prevented the individual from obtaining coverage under a qualified health plan. The Department of Health and Human Services is proposing rules on the criteria for application of the hardship exemption. Patient Protection and Affordable Care Act; Exchange Functions: Eligibility for Exemptions; Minimum Essential Coverage (to be codified at 45 CFR 155.605(g)).

Computation of Shared Responsibility Payment

Under section 5000A(c), the amount of the shared responsibility payment for any taxable year is generally the sum of monthly penalty amounts for all months in the taxable year in which any nonexempt individual for whom the taxpayer is liable under section 5000A(b) did not have minimum essential coverage. The shared responsibility payment amount for any taxable year may not exceed an amount equal to the national average premium for bronze-level qualified health plans offered through Exchanges for the applicable family size involved.

The monthly penalty amount for a month is equal to 1/12 of the greater of the following amounts: (1) The flat dollar amount or (2) the percentage of income. The flat dollar amount is the lesser of the following amounts: (a) the sum of the applicable dollar amounts for all nonexempt individuals without minimum essential coverage for whom the taxpayer is liable or (b) 300 percent of the applicable dollar amount. The applicable dollar amount is $95 for 2014, $325 for 2015, and $695 for 2016, and will be increased for calendar years beginning after 2016 by a cost-of-living adjustment. If a nonexempt individual has not attained the age of 18 as of the beginning of a month, the applicable dollar amount for that individual is one-half of the regular applicable dollar amount.

The percentage of income is calculated as the excess of the taxpayer's household income over the taxpayer's Federal income tax return filing threshold under section 6012(a)(1), multiplied by a percentage figure. The percentage figure is 1 percent for taxable years beginning in 2014, 2 percent for taxable years beginning in 2015, and 2.5 percent for taxable years beginning after 2015.

Minimum Essential Coverage

Section 5000A(f) defines *minimum essential coverage* as one of the following: (1) Coverage under a specified government sponsored program, (2) coverage under an eligible employer-sponsored plan, (3) coverage under a health plan offered in the individual market within a State, (4) coverage under a grandfathered health plan, and (5) other health benefits coverage that the Secretary of Health and Human Services, in coordination with the Secretary, recognizes for purposes of section 5000A(f).

Under section 5000A(f)(1)(A), specified government sponsored programs include the following: (1) The Medicare program under part A of title XVIII of the Social Security Act, (2) the Medicaid program under title XIX of the Social Security Act, (3) the Children's Health Insurance Program (CHIP) under title XXI of the Social Security Act, (4) medical coverage under chapter 55 of title 10, United States Code, including the TRICARE program, (5) veterans health care programs under chapter 17 or 18 of title 38, as determined by the Secretary of Veterans Affairs, in coordination with the Secretary of Health and Human Services and the Secretary of Treasury, (6) a health plan under section 2504(e) of title 22 relating

to Peace Corps volunteers, and (7) the Nonappropriated Fund Health Benefits Program of the Department of Defense, established under section 349 of the National Defense Authorization Act for Fiscal Year 1995, Public Law 103–337 (10 U.S.C. 1587 note).

Under section 5000A(f)(2), an eligible employer-sponsored plan is, with respect to an employee, a group health plan or group health insurance coverage offered by an employer to the employee that is: (1) a governmental plan, within the meaning of section 2791(d)(8) of the Public Health Service Act, or (2) any other plan or coverage offered in the small or large group market within a State. An eligible employer-sponsored plan also includes a grandfathered health plan offered in a group market.

Under section 1251 of the Affordable Care Act (42 U.S.C. 18011), a grandfathered health plan is a group health plan or health insurance coverage that provided coverage as of the enactment date of the Affordable Care Act (March 23, 2010) or in which an individual was enrolled as of that date. *See also* § 54.9815–1251T(a) (providing guidance regarding grandfathered health plans).

As described in this preamble, the Department of Health and Human Services, in coordination with the Treasury Department, may designate other health benefits coverage as minimum essential coverage. The Department of Health and Human Services is proposing a regulation that provides criteria and a process by which other types of coverage may be designated as minimum essential coverage. Patient Protection and Affordable Care Act; Exchange Functions: Eligibility for Exemptions; Minimum Essential Coverage Provisions (to be codified at 45 CFR 156.600 and following sections).

Under section 5000A(f)(3), health coverage that consists of coverage of certain excepted benefits specified in section 2791(c) of the Public Health Service Act (42 U.S.C. 300gg–91(c)) is not minimum essential coverage. There are four categories of excepted benefits. The first category includes accidental death and dismemberment coverage, disability insurance, general liability insurance, automobile liability insurance, workers' compensation, credit-only insurance (for example, mortgage insurance), and coverage for employer-provided on-site medical clinics. *See* 42 U.S.C. 300gg–91(c)(1). The second category of excepted benefits includes limited-scope dental or vision benefits, long-term care benefits, and benefits provided under certain health flexible spending arrangements. *See* 42 U.S.C. 300gg–91(c)(2). The third category of excepted benefits includes, but only if offered under a policy, certificate, or contract of insurance separate from, and not coordinated with, any group or individual health plan maintained by the same plan sponsor, coverage only for a specified disease or illness (for example, cancer-only policies) or fixed indemnity insurance (for example, a policy that pays a fixed dollar amount, such as $100, per day of hospitalization or illness regardless of the amount of medical expense incurred). *See* 42 U.S.C. 300gg–91(c)(3). The last category of excepted benefits includes, but only if offered under a policy, certificate, or contract of insurance separate from the primary health coverage, Medicare supplemental polices (also known as Medigap or MedSupp insurance), TRICARE supplemental policies, and similar supplemental coverage to coverage under a group health plan. *See* 42 U.S.C. 300gg–91(c)(4).

Under section 5000A(f)(4), an individual is treated as having minimum essential coverage for a month: (1) if the individual is a bona fide resident of a United States possession for the month or (2) if the month occurs during any period described in section 911(d)(1)(A) or section 911(d)(1)(B) that is applicable to the individual. Section 911(d)(1)(A) is applicable to a citizen of the United States who has a tax home outside the United States and is a bona fide resident of a foreign country or countries during an uninterrupted period that includes an entire taxable year. For example, an individual who resides abroad for an entire calendar year is treated as having minimum essential coverage for each month of that calendar year regardless of whether the individual has health coverage of any type. Section 911(d)(1)(B) is applicable to a U.S. citizen or U.S. resident (within the meaning of section 7701(b)) who has a tax home outside the United States and is present in a foreign country or countries for at least 330 full days during a period of 12 consecutive months. In general, an individual who meets either of the foregoing residency requirements under section 911(d)(1) is treated as a qualified individual for purposes of section 911 and may elect to exclude certain foreign earned income and housing costs from gross income.

Administration and Procedure

Under section 5000A(b)(2), an individual liable for the shared responsibility payment under section 5000A must report the payment with the individual's Federal income tax return for the taxable year including the month or months for which the payment is owed.

Under section 5000A(g)(1), the shared responsibility payment is payable upon notice and demand by the Secretary. The shared responsibility payment is generally assessed and collected in the same manner as an assessable penalty under subchapter B of chapter 68 (sections 6671 through 6725). Unlike the assessable penalties, however, the Secretary may not file notice of lien or levy on the taxpayer's property for failing to pay the assessed shared responsibility payment. Further, a taxpayer may not be subject to criminal prosecution or penalty for failing to pay the assessed shared responsibility payment in a timely manner.

Explanation of Provisions

1. Maintenance of Minimum Essential Coverage and Liability for Shared Responsibility Payment

The proposed regulations provide that, for a month, a nonexempt individual must either have minimum essential coverage or pay the shared responsibility payment.

a. Coverage for a Month

The proposed regulations provide that, for any calendar month, an individual is treated as having minimum essential coverage if the individual is enrolled in and entitled to receive benefits under a program or plan that is minimum essential coverage for at least one day during the month.

b. Liability for Shared Responsibility Payment

i. Liability for Dependents

Under section 5000A(b)(3)(A), if an individual with respect to whom the shared responsibility payment is imposed for a month is another individual's dependent (as defined in section 152) for the taxable year including that month, the other individual is liable for the shared responsibility payment for the dependent. The proposed regulations clarify that a taxpayer is liable for the shared responsibility payment imposed with respect to any individual for a month in a taxable year for which the taxpayer may claim a personal exemption deduction for the individual (that is, the dependent) for that taxable year. Whether the taxpayer actually claims the individual as a dependent for the taxable year does not affect the taxpayer's liability for the shared responsibility payment for the individual.

The proposed regulations provide special rules for determining liability for the shared responsibility payment attributable to individuals who are adopted or placed in foster care during a taxable year. If a taxpayer legally adopts a child and is entitled to claim the child as a dependent under section 151 for the taxable year when the adoption occurs, the taxpayer is not liable for a shared responsibility payment attributable to the child for the months before the adoption. Conversely, if a taxpayer who is entitled to claim a child as a dependent under section 151 for the taxable year places the child for adoption during the year, the taxpayer is not liable for a shared responsibility payment attributable to the child for the months after the adoption.

The proposed regulations define *shared responsibility family* to include all individuals for whom a taxpayer (including a spouse, if married filing jointly) is liable for the shared responsibility payment. The proposed regulations clarify that a taxpayer who is an exempt individual remains liable for a shared responsibility payment imposed for a nonexempt dependent who does not have minimum essential coverage.

ii. Joint Liability

Section 5000A(b)(3)(B) provides that, if an individual for whom the shared responsibility payment is imposed for a month files a joint return for the taxable year including that month, the individual and the individual's spouse are jointly liable for the shared responsibility payment. The proposed regulations clarify that whether one spouse is an exempt individual does not affect the joint liability of the two spouses for the shared responsibility payment.

2. Minimum Essential Coverage

a. Government Sponsored Programs

Section 5000A(f)(1)(A) specifies several government sponsored programs as providing minimum essential coverage by referring to the Federal law authorizing a particular program. In most cases, the relevant law describes a single program or a discrete portion of a larger program. For example, section 5000A(f)(1)(A)(i) lists Part A of the Medicare program under title XVIII of the Social Security Act. However, in some cases, the relevant law establishes programs with limited coverage. For instance, some of the programs under title XIX of the Social Security Act do not provide a scope of benefits comparable to the primary Medicaid program under the same title. In addition, the Secretary of Veterans Affairs, in coordination with the Secretaries of Health and Human Services and Treasury, determined that only certain health care programs under chapter 17 or 18 of title 38, United States Code provide comprehensive benefits. The programs with limited coverage are similar to coverage consisting of excepted benefits that is not minimum essential coverage under section 5000A(f)(3). Accordingly, the proposed regulations identify limited benefit programs under title XIX of the Social Security Act that are not minimum essential coverage and specify comprehensive health care programs under chapter 17 or 18 of title 38, United States Code, that are minimum essential coverage.

b. Eligible Employer-Sponsored Plans

i. In General

Section 5000A(f)(2) defines *eligible employer-sponsored plan,* for an employee, as a group health plan or group health insurance coverage offered by an employer to the employee that is either of the following: (1) A governmental plan (within the meaning of section 2791(d)(8) of the Public Health Service Act (PHSA) (42 U.S.C. 300gg–91(d)(8)) or (2) any other plan or coverage offered in the small or large group market within a State. The terms *group health plan* and *group health insurance coverage* are not defined in section 5000A. However, section 5000A(f)(5) provides that any term used in section 5000A that is also used in title I of the Affordable Care Act has the same meaning as when used in that title.

Section 1301(b)(3) of the Affordable Care Act (42 U.S.C. 18021(b)(3)) provides that *group health plan* has the same meaning as in section 2791(a) of the PHSA (42 U.S.C. 301gg–91(a)(1)). Section 2791(a) of the PHSA provides that *group health plan* means an employee welfare benefit plan (as defined in section 3(1) of the Employee Retirement Income Security Act of 1974 (ERISA) (29 U.S.C. 1002(1)) to the extent that the plan provides medical care (as defined in section 2791(a)(2) of the PHSA and including items and services paid for as medical care) to employees and their dependents directly or through insurance, reimbursement, or otherwise. Section 3(1) of ERISA defines *employee welfare benefit plan* as any plan, fund, or program established or maintained by an employer or by an employee organization, or by both, to the extent that the plan, fund, or program is established or maintained for the purpose of providing for its participants or their beneficiaries, through the purchase of insurance or otherwise, various benefits, which may include medical, surgical, or hospital care or benefits.

Group health plans within the meaning of section 1301(b)(3) of the Affordable Care Act (42 U.S.C. 18021(b)(3)) include both insured health plans and self-insured health plans. Accordingly, a self-insured group health plan is an eligible employer-sponsored plan.

ii. Continuation and Retiree Coverage

Employers are required to offer certain former employees continuation coverage under Federal or State law. Many employers offer health benefits coverage to retired employees. Under the PHSA and ERISA, group health plans and employee welfare benefit plans, respectively, include plans offered to former employees. Accordingly, the proposed regulations clarify that coverage provided by an employer to a former employee, including coverage under the Consolidated Omnibus Budget Reconciliation Act of 1985 (COBRA), Public Law 99–272 (100 Stat. 82), and retiree health coverage, qualifies as coverage under an eligible employer-sponsored plan.

c. Other Health Benefits Coverage

Under section 5000A(f)(1)(E), the Secretary of Health and Human Services, in coordination with the Secretary of the Treasury, may designate other health benefits coverage as minimum essential coverage. The Department of Health and Human Services is proposing rules providing standards for determining whether certain other types of health insurance coverage constitute minimum essential coverage and procedures for plan sponsors to follow for a plan to be identified as minimum essential coverage under section 5000A. Patient Protection and Affordable Care Act; Exchange Functions: Eligibility for Exemptions; Minimum Essential Coverage Provisions (to be codified at 45 CFR 156.600 and following sections).

3. Exempt Individuals

a. In General

The term *applicable individual* is used in section 5000A to describe an individual who is subject to the minimum essential coverage provision under section 5000A(a). Section 5000A(d)(2) through section 5000A(d)(4) describe one category of individuals who are not applicable individuals for purposes of section

5000A. Section 5000A(e)(1) through 5000A(e)(5) describe another category of individuals who are exempt from liability for the shared responsibility payment imposed under section 5000A(b). Although the two categories are distinct in the statute, the consequence for individuals described in either category is the same: individuals in both categories are not subject to the shared responsibility payment for not maintaining minimum essential coverage. Accordingly, the proposed regulations refer to all individuals described in section 5000A(d)(2), (d)(3), or (d)(4), or section 5000A(e)(1), (e)(2), (e)(3), (e)(4), or (e)(5), as *exempt individuals.* For a month, a nonexempt individual is any individual who is alive for the entire month and is not an exempt individual for the month.

The proposed regulations provide that, in general, an individual is treated as an exempt individual for a month if the individual is an exempt individual for at least one day in the month. In the case of certain individuals who are nonresident aliens (as defined in section 7701(b)(1)(B)), individuals whose household income falls below the return filing threshold, and individuals who experience short coverage gaps, the proposed regulations provide rules on how to determine whether an individual is exempt for a particular month. An individual is exempt for all months included in a taxable year when the individual is a nonresident alien. In the case of an individual whose household income falls below the return filing threshold for a taxable year, the individual is exempt for all months in the taxable year. In the case of an individual experiencing a coverage gap, the individual is exempt for a month included in the first short coverage gap in a calendar year.

b. Members of Recognized Religious Sects or Divisions

Under section 5000A(d)(2)(A), an individual is exempt for a month that the individual has in effect a religious conscience exemption certification. Only an Exchange may grant a religious conscience exemption certification. Individuals who are members of a recognized religious sect or division thereof described in section 1402(g)(1) and who are adherents of the established tenets or teachings of the sect or division are eligible to receive a religious conscience exemption certification.

c. Exempt Noncitizens

The proposed regulations clarify that an individual who is not a citizen or national of the United States is exempt for a month if the individual is not lawfully present in the United States in that month within the meaning of 45 CFR 155.20 (referring to lawful immigration status within the United States). In addition, an individual who is not a citizen or national of the United States is treated as not lawfully present in the United States for a month in a taxable year if the individual is a nonresident alien as defined in section 7701(b)(1)(B) for that taxable year.

d. Incarcerated Individuals

Section 5000A(d)(4) provides that an individual is exempt for a month for which the individual is incarcerated (other than incarceration pending the disposition of charges). The proposed regulations clarify that an individual confined for at least one day in a jail, prison, or similar penal institution or correctional facility after the disposition of charges is exempt for the month that includes the day.

e. Individuals Who Cannot Afford Coverage

Section 5000A(e)(1)(A) provides that an individual is exempt for a month for which the individual does not have access to affordable minimum essential coverage. For this purpose, an individual does not have access to affordable coverage for a month if the individual's required contribution (determined on an annual basis) for coverage for the month exceeds 8 percent of the taxpayer's household income for the taxable year. Under section 5000A(e)(1)(D), for any plan year beginning after 2014, the 8 percent figure is replaced by the percentage figure that the Secretary of Health and Human Services determines reflects the excess of the rate of premium growth between the preceding calendar year and 2013 over the rate of income growth for the same period.

For purposes of determining affordability of coverage, in accordance with section 5000A(e)(1)(A), the proposed regulations require that the taxpayer's household income be increased by the portion of the required contribution made through a salary reduction arrangement and excluded from gross income. In many cases, information on the excluded amount may not be available to the IRS or to the employee. Comments are requested on practicable ways, if any, in which the required adjustment to household income may be made with the information available under sections 6051, 6055, 6056, or other provisions of the Code.

i. Individuals Eligible for Minimum Essential Coverage Under an Eligible Employer-Sponsored Plan

A. Eligibility for Coverage Under an Eligible Employer-Sponsored Plan

If an individual is eligible for coverage under an eligible employer-sponsored plan, whether as an employee or as an individual related to an employee, the individual's qualification for the lack of affordable coverage exemption is determined solely by reference to the cost of coverage under the eligible employer-sponsored plan. The proposed regulations clarify that an employee or related individual is treated as eligible for coverage under an eligible employer-sponsored plan for each month included in the plan year if the employee or related individual could have enrolled in the plan for that month during an open or special enrollment period.

The proposed regulations also clarify that an employed individual who is eligible for coverage under an eligible employer-sponsored plan offered by the individual's employer is not treated as eligible as a related individual for coverage under a plan offered by the employer of another employed individual. Thus, if two or more members of a family are employed and their respective employers offer self-only and family coverage under eligible employer-sponsored plans, each employed individual determines the affordability of coverage using the premium for the self-only coverage offered by the individual's employer. Neither individual may determine the affordability of coverage using the premium for family coverage offered by the other individual's employer. In these cases, each employed individual's self-only coverage may be treated as affordable, even though the aggregate cost of covering all employed individuals may exceed 8 percent of the family's household income. The Department of Health and Human Services is proposing rules that would permit families in these circumstances to qualify for the hardship exemption described in section 5000A(e)(5). Patient Protection and Affordable Care Act; Exchange Functions: Eligibility for Exemptions; Minimum Essential Coverage Provisions (to be codified at 45 CFR 155.605(g)).

The proposed regulations provide that *employee* includes a former employee. Thus, an individual eligible to enroll in retiree coverage under a group health plan that is an eligible employer-sponsored plan as defined in section 5000A(f)(2) is treated as eligible to purchase minimum essential coverage

under an eligible employer-sponsored plan under the same rules applicable to current employees. The treatment of former employees is consistent with other provisions of the Code, the PHSA, and ERISA that apply to group health plans of employers.

In addition, the proposed regulations provide that an individual eligible to enroll in continuation coverage required under Federal law, such as COBRA, or a comparable State law is eligible to purchase minimum essential coverage under an eligible employer-sponsored plan only if the individual enrolls in the coverage. This treatment of former employees eligible for continuation coverage is consistent with the rules provided in § 1.36B–2(c)(3)(iv).

B. Required Contribution for Employees Eligible for Coverage Under an Employer-Sponsored Plan

Section 5000A(e)(1)(B)(i) provides that, in the case of an employee eligible to purchase minimum essential coverage through an eligible employer-sponsored plan, the required contribution is the portion of the annualized premium that the individual would pay (without regard to whether paid through salary reduction or otherwise) for self-only coverage. The proposed regulations clarify that, for an employee eligible for coverage under an eligible employer-sponsored plan, the required contribution is the portion of the annual premium that the employee would pay for the lowest cost self-only coverage.

C. Required Contribution for a Related Individual Eligible for Coverage Under an Eligible Employer-Sponsored Plan

Section 5000A(e)(1)(C) provides that, in the case of a related individual eligible to purchase minimum essential coverage under an eligible employer-sponsored plan because of the individual's relationship with an employee, the related individual's affordability determination is made by reference to the employee's required contribution. The proposed regulations provide that a related individual is an individual who is eligible for coverage under an eligible employer-sponsored plan because of a relationship to an employee and for whom a personal exemption deduction under section 151 is properly claimed on the employee's Federal income tax return. For example, an employee's spouse is treated as a related individual if the spouse files a joint return with the employee and is eligible for employer-sponsored coverage only under the plan offered to the employee. An individual who is eligible to enroll in an eligible employer-sponsored plan by reason of a relationship to an employee, but who is not claimed as a dependent by the employee, is not treated as a related individual. For purposes of section 5000A, the unclaimed dependent's household income is independently determined.

The proposed regulations clarify that if an employee or related individual is eligible to enroll in an eligible employer-sponsored plan, any eligibility for other coverage (for example, government sponsored minimum essential coverage) is disregarded for purposes of the exemption for lack of affordable coverage.

The proposed regulations further clarify that the required contribution for a related individual's coverage is determined by reference to the premium for the lowest cost coverage under the eligible employer-sponsored plan in which the employee and all related individuals who are included in the employee's family and not otherwise exempt are eligible to enroll. Thus, the required contribution for a spouse and claimed dependents (who are not otherwise exempt) is the premium that the employee would pay for the lowest cost coverage covering the employee, the spouse, and the claimed dependents. The required contribution for self-only coverage under an eligible employer-sponsored plan may cost less than 8 percent of household income, while the required contribution for family coverage under the same employer plan may cost more than 8 percent of household income. In such a case, the employee is not exempt under section 5000A(e)(1), while the employee's spouse and claimed dependents are exempt.

Finally, some individuals who are claimed as dependents by a taxpayer may not be eligible for coverage under the taxpayer's eligible employer-sponsored plan. The affordability of coverage for these individuals is determined in the manner that applies to them individually. Thus, if a taxpayer is not allowed to enroll a niece who is the taxpayer's dependent in the taxpayer's eligible employer-sponsored plan, the required contribution for the niece is not determined by reference to the cost of coverage under the plan. Instead, unless the niece is eligible for coverage under another eligible employer-sponsored plan, her required contribution is determined under the rules applicable to individuals eligible only to purchase coverage in the individual market.

ii. Individuals eligible only to purchase coverage in the individual market

Section 5000A(e)(1)(B)(ii) defines the term *required contribution* for an individual eligible only to purchase coverage in the individual market. The proposed regulations clarify that, for any individual who is not an employee or related individual eligible for minimum essential coverage under an eligible employer-sponsored plan, the required contribution is the premium for the lowest cost bronze plan available in the individual market through the Exchange serving the rating area where the individual resides, reduced by the maximum amount of any premium tax credit that would be allowable if the individual were enrolled in the plan offered through the Exchange.

As explained in this preamble, under the proposed regulations, both the annual premium for the applicable lowest cost bronze plan and the credit allowable under section 36B are determined by reference to coverage for those members of the individual's family who are not otherwise exempt (*nonexempt family*). Consequently, the required contribution is the same for all members of a nonexempt family who are ineligible for coverage under an eligible employer-sponsored plan.

A. Premium for the Lowest Cost Bronze Plan

The proposed regulations provide that the lowest cost bronze plan is the lowest cost bronze-level qualified health plan available in the Exchange serving the rating area that would cover all members of the nonexempt family who are ineligible for coverage under an eligible employer-sponsored plan. Accordingly, the premium for the lowest cost bronze plan is the same for all individuals in a nonexempt family.

The proposed regulations provide special rules for determining the premium for the lowest cost bronze plan if the Exchange does not offer a bronze-level plan that would cover the taxpayer's entire nonexempt family. The proposed regulations provide that, in general, the premium for the lowest cost bronze plan is the sum of the premiums for the lowest cost bronze plans that would, taken together, cover the taxpayer's nonexempt family (for example, for an uncle and two adult dependent nieces, a self-only plan for the uncle and a two-adult or family plan for the nieces). Alternatively, the proposed regulations provide that a taxpayer may elect to use the premium for the lowest cost bronze plan that would apply to a set of individuals that have the same characteristics as the

taxpayer's nonexempt family (such as one adult plus children) as if one plan covered all members of the taxpayer's shared responsibility family.

B. Credit Allowable Under Section 36B

In general, a premium tax credit is allowable under section 36B for any coverage month (within the meaning of § 1.36B–3(c)) that occurs in a taxable year in which a taxpayer is an applicable taxpayer (within the meaning of § 1.36B–2(b)). A month is not a coverage month for an individual, and thus no premium tax credit is allowable for the individual's coverage, if the individual is eligible for minimum essential coverage other than coverage offered in the individual market for that month. In general, an applicable taxpayer is a taxpayer whose household income for the taxable year is between 100 percent and 400 percent of the Federal poverty line for the taxpayer's family size.

Section 36B(b)(1) provides that the premium tax credit for any taxable year is the sum of the premium assistance amounts with respect to all coverage months occurring in the taxable year. Under section 36B(b)(2), for any coverage month, the premium assistance amount is the lesser of the following: (1) The monthly premiums for the month for one or more qualified health plans in which the taxpayer or a member of the taxpayer's family (coverage family) is enrolled through the Exchange serving the rating area where they reside or (2) any excess of the adjusted monthly premium for the month for the applicable second lowest cost silver plan for the taxpayer over an amount equal to ½ of the product of the applicable percentage and the taxpayer's household income for the taxpayer. Section 36B, therefore, calculates the allowable credit by treating the family as a single, aggregated unit.

The proposed regulations take a similar family-unit approach to determine the affordability of Exchange coverage. The proposed regulations provide that, for purposes of section 5000A, each individual in the taxpayer's nonexempt family is treated as having enrolled in a qualified health plan through the appropriate Exchange for purposes of determining the credit allowable under section 36B. Therefore, for each individual, a month is treated as a coverage month if the individual is ineligible for minimum essential coverage other than coverage in the individual market for the month. The proposed regulations further provide that the premium assistance amount for the month is the amount that would be allowable under the rules of section 36B if each member of the individual's nonexempt family enrolled in a qualified health plan through an Exchange. Accordingly, for a month that an individual included in a nonexempt family is eligible for minimum essential coverage other than coverage in the individual market, the month is not a coverage month for that individual, the individual is not included in the coverage family for purposes of section 36B, and no premium assistance amount is allowable for the coverage attributable to such individual.

f. Household Income Below Return Filing Threshold

Section 5000A(e)(2) provides that an individual is exempt for a month in a calendar year if the individual's household income for the taxable year is less than the amount of gross income specified in section 6012(a)(1) with respect to the taxpayer. The proposed regulations refer to ''the amount of gross income specified in section 6012(a)(1) with respect to the taxpayer'' (that is, the minimum amount of gross income that triggers the individual's requirement to file a Federal income tax return under that section) as the applicable filing threshold.

The proposed regulations further clarify that, for any individual who is properly claimed as a dependent, the applicable filing threshold is that of the taxpayer who claims the individual as a dependent. Therefore, if a taxpayer is exempt under section 5000A(e)(2), any individual the taxpayer properly claims as a dependent also is exempt as well. The Treasury Department and the IRS recognize that some taxpayers who do not have sufficient gross income to trigger a return filing requirement nevertheless may have household income that exceeds the return filing threshold. For example, if a taxpayer whose gross income is below the applicable filing threshold files a Federal income tax return in order to claim certain tax benefits (such as the earned income credit or additional child tax credit) and claims a dependent whose gross income triggers a return filing requirement, the household income (which combines the taxpayer's and the dependent's income) may exceed the filing threshold. The Department of Health and Human Services is proposing rules providing that individuals in this circumstance may qualify for a hardship exemption. Patient Protection and Affordable Care Act; Exchange Functions: Eligibility for Exemptions; Minimum Essential Coverage Provisions (to be codified at 45 CFR 155.605(g)). The Treasury Department and the IRS are considering additional methods of accommodating individuals in these circumstances.

g. Short Coverage Gap

The proposed regulations clarify that a continuous period without minimum essential coverage is determined by reference to calendar months (for example, January or February) in conjunction with the coverage rule in § 1.5000A–1(b). Therefore, if an individual is enrolled in and entitled to receive benefits under a plan identified as minimum essential coverage for one day in a calendar month, the month is not included in the continuous period when determining the application of the short coverage gap exemption. As a result, the proposed regulations provide that an individual qualifies for the short coverage gap exemption if the continuous period without minimum essential coverage is less than three full calendar months and is the first short coverage gap in the individual's taxable year.

i. Coverage Gap Straddling Multiple Taxable Years

In general, section 5000A(e)(4)(B)(i) provides that the length of a continuous period is determined without regard to the calendar years in which months in the period occur. However, whether an individual had coverage during the last month, or the last two months, of a taxable year affects the determination of whether any gap in coverage that the individual experiences in the first month, or the first and second months, of the following taxable year qualifies as a short coverage gap. Accordingly, if a calendar year taxpayer has a continuous period of 3 months or longer that starts in November or December of one taxable year and ends in the next taxable year, then January and any ensuing months of the second taxable year that are included in the period are ineligible for the short coverage gap exemption.

Section 5000A(e)(4) expressly authorizes the Secretary to prescribe rules for the collection of the shared responsibility payment in cases in which continuous periods include months in more than one taxable year. Each Federal income tax return covers a single taxable year and requires the taxpayer to account for coverage of the taxpayer's shared responsibility family during the months included in that taxable year. To require a taxpayer to take into account months in the following taxable year may delay or impede the taxpayer's ability to file a timely Federal income tax return. Accordingly, to provide taxpayers with certainty when filing their Federal income tax returns, the proposed

regulations provide that an individual who lacks minimum essential coverage for a period no longer than the last two months of a taxable year will be deemed to have a short coverage gap exemption for those months if the short coverage gap is the first to occur in that taxable year, without regard to whether the individual is covered during the first months of the following taxable year.

ii. Coordination With Other Exemptions

The proposed regulations clarify that, for purposes of determining whether a short coverage gap applies, an individual is treated as covered under minimum essential coverage for a month in which the individual qualifies for a section 5000A exemption (other than the short coverage gap exemption). Therefore, the short coverage exemption applies to a month in which no other section 5000A exemption applies, and a month in which an individual is otherwise exempt is not taken into account in determining the length of the continuous period without coverage.

h. Claiming Section 5000A Exemptions

The exemptions for members of recognized religious sects or divisions and for individuals who have suffered a hardship are available only to individuals who have been certified as meeting the relevant criteria by the Exchange serving the rating area where the individuals seeking the exemption reside.

In addition, Exchanges will provide, upon request, exemption certifications for members of health care sharing ministries, incarcerated individuals, and members of Indian tribes. If an individual receives an exemption certification from an Exchange, the taxpayer who is responsible for accounting for that individual's coverage must provide information about the certification on the taxpayer's Federal income tax return. Alternatively, a taxpayer may claim any of these exemptions on the taxpayer's Federal income tax return for the taxable year.

Finally, the income-based exemptions for individuals who lack affordable coverage or have household income below the applicable income tax return filing threshold and the exemption for short coverage gaps may be claimed only on the individual's Federal income tax return for the applicable year. Thus, an individual claiming the affordability exemption under section 5000A(e)(1) for part or all of a taxable year will do so on the Federal income tax return that reports the individual's income establishing qualification for the exemption. An individual who has household income below the applicable Federal income tax return filing threshold and files a Federal income tax return may claim the exemption under section 5000A(e)(2) on the return. However, an individual who has household income below the applicable Federal income tax return filing threshold is not required to file a Federal income tax return to claim the exemption under section 5000A(e)(2).

Pursuant to section 6001, taxpayers are required to maintain all records and information substantiating any claim for exemption on the taxpayer's Federal income tax return, regardless of whether the individual was certified by an Exchange as qualifying for an exemption or first claimed the exemption on a Federal income tax return.

4. Computation of Shared Responsibility Payment

Under section 5000A(b)(1) and 5000A(b)(3)(A), a taxpayer is liable for the shared responsibility payment with respect to any nonexempt individual who is included in the taxpayer's shared responsibility family. The maximum annual amount of the shared responsibility payment for a taxpayer is the national average premium for the bronze level plan available through Exchanges that provides coverage for the applicable family size involved. The proposed regulations clarify that the applicable family size involved for purposes of identifying the appropriate bronze level plan includes only the nonexempt members of the taxpayer's shared responsibility family who do not have minimum essential coverage.

Under section 5000A(c), the annual amount of the shared responsibility payment is the lesser of the applicable national average bronze plan premium or the sum of the monthly penalty amounts. The monthly penalty amount may vary month to month because of changes in the composition of the taxpayer's shared responsibility family. To provide a meaningful value with which the sum of the monthly penalty amounts are compared, the proposed regulations provide that the applicable national average bronze plan premium must similarly be determined for each month and then aggregated for comparison with the sum of the monthly penalty amounts. Consequently, the applicable national average bronze plan premium may vary from month to month during the year to account for changes in the taxpayer's shared responsibility family.

5. Procedure and Administration

a. Inclusion With Federal Income Tax Return

Section 5000A(b)(2) provides that the shared responsibility payment for a month must be included with a taxpayer's Federal income tax return for the taxable year that includes the month. The proposed regulations clarify that the time for assessing the shared responsibility payment is the same time as that prescribed by section 6501 for the taxable year including the month for which the taxpayer is liable for the payment.

b. Assessment and Collection

Section 5000A(g)(1) provides that the shared responsibility payment is payable upon notice and demand by the Secretary and, except as provided in section 5000A(g)(2), is assessed and collected in the same manner as an assessable penalty under subchapter B of chapter 68 of the Code (sections 6671 through 6725). The proposed regulations clarify that the shared responsibility payment is not subject to deficiency procedures of subchapter B of chapter 63 of the Code. In addition, the proposed regulations clarify that interest on the shared responsibility payment accrues in accordance with the rules in section 6601. The proposed regulations further provide that the Secretary may offset any liability for the shared responsibility payment against any overpayment due the taxpayer, in accordance with section 6402(a).

Applicability Date

These regulations are proposed to apply for months beginning after December 31, 2013.

Special Analyses

It has been determined that this notice of proposed rulemaking is not a significant regulatory action as defined in Executive Order 12866, as supplemented by Executive Order 13563. Therefore, a regulatory assessment is not required. It also has been determined that section 553(b) of the Administrative Procedure Act (5 U.S.C. chapter 5) does not apply to the proposed regulations. Pursuant to the Regulatory Flexibility Act (RFA) (5 U.S.C. chapter 6), it is hereby certified that the proposed regulations will not have a significant economic impact on a substantial number of small entities. The applicability of the proposed regulations is limited to individuals, who are not small entities as defined by the RFA (5 U.S.C. 601). Accordingly, the RFA does not apply. Therefore, a regulatory flexibility analysis is not

required. Pursuant to section 7805(f) of the Code, the proposed regulations have been submitted to the Chief Counsel for Advocacy of the Small Business Administration for comment on its impact on small business.

Comments and Public Hearing

Before the proposed regulations are adopted as final regulations, consideration will be given to any comments that are submitted timely to the IRS as prescribed in this preamble under the ''Addresses'' heading. The Treasury Department and the IRS request comments on all aspects of the proposed rules. All comments will be available at *www.regulations.gov* or upon request.

A public hearing has been scheduled for May 29, 2013, beginning at 10:00 a.m., in the Auditorium, Internal Revenue Building, 1111 Constitution Avenue NW., Washington, DC. Due to building security procedures, visitors must enter at the Constitution Avenue entrance. In addition, all visitors must present photo identification to enter the building. Because of access restrictions, visitors will not be admitted beyond the immediate entrance area more than 30 minutes before the hearing starts. For information about having your name placed on the building access list to attend the hearing, see the **FOR FURTHER INFORMATION CONTACT** section of this preamble.

The rules of § 601.601(a)(3) of this chapter apply to the hearing. Persons who wish to present oral comments at the hearing must submit electronic or written comments, and an outline of the topics to be discussed and the time to be devoted to each topic (signed original and eight (8) copies) by May 3, 2013. A period of 10 minutes will be allotted to each person for making comments. An agenda showing the scheduling of the speakers will be prepared after the deadline for receiving outlines has passed. Copies of the agenda will be available free of charge at the hearing.

Drafting Information

The principal authors of the proposed regulations are William L. Candler and Sue-Jean Kim, Office of the Associate Chief Counsel (Income Tax & Accounting). Other personnel from the Treasury Department and the IRS participated in the development of the regulations.

List of Subjects in 26 CFR Part 1

Income taxes, Reporting and recordkeeping requirements.

Proposed Amendments to the Regulations

Accordingly, 26 CFR part 1 is proposed to be amended to read as follows:

PART 1—INCOME TAXES

■ **Paragraph 1.** The authority citation for part 1 is amended by adding an entry in numerical order to read in part as follows:

Authority: 26 U.S.C. 7805* * *

Section 1.5000A–4 also issued under 26 U.S.C. 5000A(e)(4).

■ **Par 2.** Sections 1.5000A–0 through 1.5000A–5 are added to read as follows:

§ 1.5000A–0 Table of contents.

This section lists the captions contained in §§ 1.5000A–1 through 1.5000A–5.

§ 1.5000A–1 Maintenance of minimum essential coverage and liability for the shared responsibility payment.
(a) In general.
(b) Coverage under minimum essential coverage.
(1) In general.
(2) Special rule for United States citizens or residents residing outside the United States or residents of territories.
(c) Liability for shared responsibility payment.
(1) In general.
(2) Liability for dependents.
(i) In general.
(ii) Special rules for dependents adopted or placed in foster care during the taxable year.
(A) Taxpayers adopting an individual.
(B) Taxpayers placing an individual for adoption.
(C) Examples.
(3) Liability of individuals filing a joint return.
(d) Definitions.
(1) Affordable Care Act.
(2) Qualified health plan.
(3) Exchange.
(4) Rating area.
(5) Shared responsibility family.
(6) Family.
(7) Household income.
(i) In general.
(ii) Modified adjusted gross income.
(8) Self-only coverage.
(9) Family coverage.
(10) Employee.
(11) Month.
§ 1.5000A–2 Minimum essential coverage.
(a) In general.
(b) Government sponsored program.
(c) Eligible employer-sponsored plan.
(1) In general.
(2) Group health plan.
(3) Group health insurance coverage.
(4) Large and small group market.
(5) Government sponsored program not treated as eligible employer-sponsored plan.
(d) Plan in the individual market.
(e) Grandfathered health plan.
(f) Other health benefits coverage.
(g) Excepted benefits.
§ 1.5000A–3 Exempt individuals.
(a) Members of recognized religious sects.
(1) In general.
(2) Exemption certification.
(b) Member of health care sharing ministries.
(1) In general.
(2) Health care sharing ministry.
(c) Exempt noncitizens.
(1) In general.
(2) Exempt noncitizens.
(d) Incarcerated individuals.
(1) In general.
(2) Incarcerated.
(e) Individuals with no affordable coverage.
(1) In general.
(2) Required contribution percentage.
(i) In general.
(ii) Indexing.
(iii) Plan year.
(3) Individuals eligible for coverage under eligible employer-sponsored plans.
(i) Eligibility.
(A) In general.
(B) Special rule for continuation coverage.
(ii) Required contribution for individuals eligible for coverage under an eligible employer-sponsored plan.
(A) Employees.
(B) Individuals related to employees.
(C) Required contribution for part-year period.
(D) Examples.
(4) Individuals ineligible for coverage under eligible employer-sponsored plans.
(i) Eligibility for coverage other than an eligible employer-sponsored plan.
(ii) Required contribution for individuals ineligible for coverage under eligible employer-sponsored plans.
(A) In general.
(B) Applicable plan.
(*1*) In general.
(*2*) Lowest cost bronze plan does not cover all individuals included in the taxpayer's nonexempt family.
(*i*) In general.
(*ii*) Simplified method for applicable plan identification.
(C) Credit allowable under section 36B.
(D) Required contribution for part-year period.
(iii) Examples.
(f) Household income below filing threshold.
(1) In general.
(2) Applicable filing threshold.
(i) In general.
(ii) Certain dependents.
(g) Members of Indian tribes.
(h) Individuals with hardship exemption certification.
(1) In general.
(2) Hardship exemption certification.
(i) [Reserved]
(j) Individuals with certain short coverage gaps.
(1) In general.
(2) Short coverage gap.
(i) In general.
(ii) Coordination with other exemptions.
(iii) More than one short coverage gap during calendar year.
(3) Continuous period.
(i) In general.
(ii) Continuous period straddling more than one taxable year.

(4) Examples.
(k) Claiming exemptions from the shared responsibility payment.
(1) Exemptions requiring certification by an Exchange.
(2) Exemptions that may be certified by an Exchange or claimed on a Federal income tax return.
(i) Exemption certified by an Exchange.
(ii) Exemption claimed on a Federal income tax return.
(3) Exemptions that are claimed on Federal income tax returns.
§ 1.5000A–4 Computation of shared responsibility payment.
(a) In general.
(b) Monthly penalty amount.
(1) In general.
(2) Flat dollar amount.
(i) In general.
(ii) Applicable dollar amount.
(iii) Special applicable dollar amount for individuals under age 18.
(iv) Indexing of applicable dollar amount.
(3) Excess income amount.
(i) In general.
(ii) Income percentage.
(c) Monthly national average bronze plan premium.
(d) Examples.
§ 1.5000A–5 Administration and procedure.
(a) In general.
(b) Special rules.
(1) Waiver of criminal penalties.
(2) Limitations on liens and levies.
(3) Authority to offset against overpayment.
(c) Effective/applicability date.

§ 1.5000A–1 Maintenance of minimum essential coverage and liability for the shared responsibility payment.

(a) *In general.* For each month during the taxable year, a nonexempt individual must have minimum essential coverage or pay the shared responsibility payment. For a month, a nonexempt individual is an individual in existence for the entire month who is not an exempt individual described in § 1.5000A–3.

(b) *Coverage under minimum essential coverage*—(1) *In general.* An individual has minimum essential coverage for a month in which the individual is enrolled in and entitled to receive benefits under a program or plan identified as minimum essential coverage in § 1.5000A–2 for at least one day in the month.

(2) *Special rule for United States citizens or residents residing outside the United States or residents of territories.* An individual is treated as having minimum essential coverage for a month—

(i) If the month occurs during any period described in section 911(d)(1)(A) or section 911(d)(1)(B) that is applicable to the individual; or

(ii) If, for the month, the individual is a bona fide resident of a possession of the United States (as determined under section 937(a)).

(c) *Liability for shared responsibility payment*—(1) *In general.* A taxpayer is liable for the shared responsibility payment for a month for which—

(i) The taxpayer is a nonexempt individual without minimum essential coverage; or

(ii) A nonexempt individual for whom the taxpayer is liable under paragraph (c)(2) or (c)(3) of this section does not have minimum essential coverage.

(2) *Liability for dependents*—(i) *In general.* For a month when a nonexempt individual does not have minimum essential coverage, if the nonexempt individual is a dependent (as defined in section 152) of another individual for the other individual's taxable year including that month, the other individual is liable for the shared responsibility payment attributable to the dependent's lack of coverage. An individual is a dependent of a taxpayer for a taxable year if the individual satisfies the definition of dependent under section 152, regardless of whether the taxpayer claims the individual as a dependent on a Federal income tax return for the taxable year. If an individual may be claimed as a dependent by more than one taxpayer in the same calendar year, the taxpayer who properly claims the individual as a dependent for the taxable year is liable for the shared responsibility payment attributable to the individual. If more than one taxpayer may claim an individual as a dependent in the same calendar year but no one claims the individual as a dependent, the taxpayer with priority under the rules of section 152 to claim the individual as a dependent is liable for the shared responsibility payment for the individual.

(ii) *Special rules for dependents adopted or placed in foster care during the taxable year*—(A) *Taxpayers adopting an individual.* If a taxpayer adopts a nonexempt dependent (or accepts a nonexempt dependent who is an eligible foster child as defined in section 152(f)(1)(C)) during the taxable year and is otherwise liable for a nonexempt dependent under paragraph (c)(2)(i) of this section, the taxpayer is liable under paragraph (c)(2)(i) of this section for the nonexempt dependent only for the full months in the taxable year that follow the month in which the adoption or acceptance occurs.

(B) *Taxpayers placing an individual for adoption.* If a taxpayer who is otherwise liable for a nonexempt dependent under paragraph (c)(2)(i) of this section places (or, by operation of law, must place) the nonexempt dependent for adoption or foster care during the taxable year, the taxpayer is liable under paragraph (c)(2)(i) of this section for the nonexempt dependent only for the full months in the taxable year that precede the month in which the adoption or foster care placement occurs.

(C) *Examples.* The following examples illustrate the provisions of this paragraph (c)(2)(ii). In each example the taxpayer's taxable year is a calendar year.

Example 1. Taxpayers adopting a child. (i) E and F, married individuals filing a joint return, initiate proceedings for the legal adoption of a 2-year old child, G, in January 2016. On May 15, 2016, G becomes the adopted child (within the meaning of section 152(f)(1)(B)) of E and F, and resides with them for the remainder of 2016. G meets all requirements under section 152 to be E and F's dependent for 2016. Prior to the adoption, G resides with H, an unmarried individual, with H providing all of G's support.

(ii) Under paragraph (c)(2) of this section, E and F are not liable for a shared responsibility payment attributable to G for January through May of 2016, but are liable for a shared responsibility payment attributable to G, if any, for June through December of 2016. H is not liable for a shared responsibility payment attributable to G for any month in 2016, because G is not H's dependent for 2016 under section 152.

Example 2. Taxpayers placing a child for adoption. (i) The facts are the same as *Example 1,* except the legal adoption occurs on August 15, 2016. G meets all requirements under section 152 to be H's dependent for 2016.

(ii) Under paragraph (c)(2) of this section, H is liable for a shared responsibility payment attributable to G, if any, for January through July of 2016, but is not liable for a shared responsibility payment attributable to G for August through December of 2016. E and F are not liable for a shared responsibility payment attributable to G for any month in 2016, because G is not E and F's dependent for 2016 under section 152.

(3) *Liability of individuals filing a joint return.* Married individuals (within the meaning of section 7703) who file a joint return for a taxable year are jointly liable for any shared responsibility payment for a month included in the taxable year.

(d) *Definitions.* The definitions in this paragraph (d) apply to this section and §§ 1.5000A–2 through 1.5000A–5.

(1) *Affordable Care Act. Affordable Care Act* refers to the Patient Protection and Affordable Care Act, Public Law 111–148 (124 Stat. 119 (2010)), and the Health Care and Education Reconciliation Act of 2010, Public Law 111–152 (124 Stat. 1029 (2010)), as amended.

(2) *Qualified health plan. Qualified health plan* has the same meaning as in section 1301(a) of the Affordable Care Act (42 U.S.C. 18021(a)).

(3) *Exchange. Exchange* has the same meaning as in 45 CFR 155.20.

(4) *Rating area. Rating area* has the same meaning as in § 1.38B–1(n).

(5) *Shared responsibility family. Shared responsibility family* means, for a month, all nonexempt individuals for whom the taxpayer (and the taxpayer's spouse, if the taxpayer is married and files a joint return with the spouse) is liable for the shared responsibility payment under paragraph (c) of this section.

(6) *Family.* A taxpayer's family means the individuals for whom the taxpayer properly claims a deduction for a personal exemption under section 151 for the taxable year.

(7) *Household income*—(i) *In general. Household income* means the sum of—

(A) A taxpayer's modified adjusted gross income; and

(B) The aggregate modified adjusted gross income of all other individuals who—

(*1*) Are included in the taxpayer's family under paragraph (d)(6) of this section; and

(*2*) Are required to file a Federal income tax return for the taxable year (determined without regard to the exception under section 1(g)(7) to the requirement to file a Federal income tax return).

(ii) *Modified adjusted gross income. Modified adjusted gross income* means adjusted gross income (within the meaning of section 62) increased by—

(A) Amounts excluded from gross income under section 911; and

(B) Tax-exempt interest the taxpayer receives or accrues during the taxable year.

(8) *Self-only coverage. Self-only coverage* means health insurance that covers one individual.

(9) *Family coverage. Family coverage* means health insurance that covers more than one individual.

(10) *Employee. Employee* includes former employees.

(11) *Month. Month* means calendar month.

§ 1.5000A–2 Minimum essential coverage.

(a) *In general. Minimum essential coverage* means coverage under a government sponsored program (described in paragraph (b) of this section), an eligible employer-sponsored plan (described in paragraph (c) of this section), a plan in the individual market (described in paragraph (d) of this section), a grandfathered health plan (described in paragraph (e) of this section), or other health benefits coverage (described in paragraph (f) of this section). Minimum essential coverage does not include coverage described in paragraph (g) of this section. All terms defined in this section apply for purposes of this section and § 1.5000A–1 and §§ 1.5000A–3 through 1.5000A–5.

(b) *Government sponsored program. Government sponsored program* means any of the following:

(1) The Medicare program under part A of title XVIII of the Social Security Act (42 U.S.C. 1395c and following sections);

(2) The Medicaid program under title XIX of the Social Security Act (42 U.S.C. 1396 and following sections) other than—

(i) Optional coverage of family planning services under section 1902(a)(10)(A)(ii)(XXI) of the Social Security Act (42 U.S.C. 1396a(a)(10)(A)(ii)(XXI));

(ii) Optional coverage of tuberculosis-related services under section 1902(a)(10)(A)(ii)(XII) (42 U.S.C. 1396a(a)(10)(A)(ii)(XII));

(iii) Coverage of pregnancy-related services under section 1902(a)(10)(A)(i)(IV) and (a)(10)(A)(ii)(IX) (42 U.S.C. 1396a(a)(10)(A)(i)(IV), (a)(10)(A)(ii)(IX)); or

(iv) Coverage of medical emergency services under 8 U.S.C. 1611(b)(1)(A), as authorized by section 1903(v) of the Social Security Act (42 U.S.C. 1396b(v)).

(3) The Children's Health Insurance Program (CHIP) under title XXI of the Social Security Act (42 U.S.C 1397aa and following sections);

(4) Medical coverage under chapter 55 of title 10, U.S.C., including coverage under the TRICARE program;

(5) The following health care programs under chapter 17 or 18 of title 38, U.S.C.:

(i) The medical benefits package authorized for eligible veterans under 38 U.S.C. 1710 and 38 U.S.C. 1705;

(ii) The Civilian Health and Medical Program of the Department of Veterans Affairs (CHAMPVA) authorized under 38 U.S.C. 1781; and

(iii) The comprehensive health care program authorized under 38 U.S.C. 1803 and 38 U.S.C. 1821 for certain children of Vietnam Veterans and Veterans of covered service in Korea who are suffering from spina bifida.

(6) A health plan under section 2504(e) of title 22, U.S.C. (relating to Peace Corps volunteers); and

(7) The Nonappropriated Fund Health Benefits Program of the Department of Defense, established under section 349 of the National Defense authorization Act for Fiscal Year 1995 (Public Law No. 103–337; 10 U.S.C. 1587 note).

(c) *Eligible employer-sponsored plan*—(1) *In general. Eligible employer-sponsored plan* means, with respect to any employee, a group health plan (whether an insured group health plan or a self-insured group health plan) or group health insurance coverage offered by an employer to the employee, which is—

(i) A governmental plan (within the meaning of section 2791(d)(8) of the Public Health Service Act (42 U.S.C. 300gg–91(d)(8)));

(ii) Any other plan or coverage offered in the small or large group market within a State;

(iii) A grandfathered health plan (within the meaning of paragraph (e) of this section) offered in a group market.

(2) *Group health plan. Group health plan* has the same meaning as in section 2791(a) of the Public Health Service Act (42 U.S.C. 300gg–91(a)(1)).

(3) *Group health insurance coverage. Group health insurance coverage* has the same meaning as in section 2791(b) of the Public Health Service Act (42 U.S.C. 300gg–91(b)).

(4) *Large and small group market. Large group market* and *small group market* have the same meanings as in section 1304(a)(3) of the Affordable Care Act (42 U.S.C. 18024(a)(3)).

(5) *Government sponsored program not treated as eligible employer-sponsored plan.* A government sponsored program described in paragraph (b) of this section is not an eligible employer-sponsored plan.

(d) *Plan in the individual market. Plan in the individual market* means health insurance coverage offered to individuals not in connection with a group health plan, including a qualified health plan offered by an Exchange.

(e) *Grandfathered health plan. Grandfathered health plan* means any group health plan or group health insurance coverage to which section 1251 of the Affordable Care Act (42 U.S.C.18011) applies.

(f) *Other health benefits coverage.* Minimum essential coverage includes any plan or arrangement recognized by the Secretary of Health and Human Services as minimum essential coverage for purposes of section 5000A under 45 CFR 156.600 and following sections.

(g) *Excepted benefits.* Minimum essential coverage does not include any health insurance coverage that consists of excepted benefits that are described in section 2791(c)(1), (c)(2), (c)(3), or (c)(4) of the Public Health Service Act (42 U.S.C. 300gg–91(c)).

§ 1.5000A–3 Exempt individuals.

(a) *Members of recognized religious sects*—(1) *In general.* An individual is an exempt individual for a month that includes a day on which the individual

has in effect a religious conscience exemption certification described in paragraph (a)(2) of this section.

(2) *Exemption certification.* A religious conscience exemption certification is issued by an Exchange in accordance with the requirements of section 1311(d)(4)(H) of the Affordable Care Act (42 U.S.C. 18031(d)(4)(H)) and 45 CFR 155.605(c), 45 CFR 155.615(b) and certifies that an individual is—

(i) A member of a recognized religious sect or division thereof that is described in section 1402(g)(1); and

(ii) An adherent of established tenets or teachings of the sect or division as described in that section.

(b) *Member of health care sharing ministries*—(1) *In general.* An individual is an exempt individual for a month that includes a day on which the individual is a member of a health care sharing ministry.

(2) *Health care sharing ministry.* For purposes of this section, *health care sharing ministry* means an organization—

(i) That is described in section 501(c)(3) and is exempt from tax under section 501(a);

(ii) Members of which share a common set of ethical or religious beliefs and share medical expenses among themselves in accordance with those beliefs and without regard to the State in which a member resides or is employed;

(iii) Members of which retain membership even after they develop a medical condition;

(iv) That (or a predecessor of which) has been in existence at all times since December 31, 1999;

(v) Members of which have shared medical expenses continuously and without interruption since at least December 31, 1999; and

(vi) That conducts an annual audit performed by an independent certified public accounting firm in accordance with generally accepted accounting principles and makes the annual audit report available to the public upon request.

(c) *Exempt noncitizens*—(1) *In general.* An individual is an exempt individual for a month that the individual is an exempt noncitizen.

(2) *Exempt noncitizens.* For purposes of this section, an individual is an exempt noncitizen for a month if the individual—

(i) Is not a U.S. citizen or U.S. national for any day during the month; and

(ii) Is either—

(A) A nonresident alien (within the meaning of section 7701(b)(1)(B)) for the taxable year that includes the month; or

(B) An individual who is not lawfully present (within the meaning of 45 CFR 155.20) in the United States on any day in the month.

(d) *Incarcerated individuals*—(1) *In general.* An individual is an exempt individual for a month that includes a day on which the individual is incarcerated.

(2) *Incarcerated.* For purposes of this section, the term *incarcerated* means confined, after the disposition of charges, in a jail, prison, or similar penal institution or correctional facility.

(e) *Individuals with no affordable coverage*—(1) *In general.* An individual is an exempt individual for a month in which the individual lacks affordable coverage. For purposes of this paragraph (e), an individual lacks affordable coverage in a month if the individual's required contribution (determined on an annual basis) for minimum essential coverage for the month exceeds the required contribution percentage (as defined in paragraph (e)(2) of this section) of the individual's household income. For purposes of this paragraph (e), an individual's household income is increased by any amount of the required contribution made through a salary reduction arrangement that is excluded from gross income.

(2) *Required contribution percentage*—(i) *In general.* Except as provided in paragraph (e)(2)(ii) of this section, the required contribution percentage is 8 percent.

(ii) *Indexing.* For plan years beginning in any calendar year after 2014, the required contribution percentage is the percentage determined by the Department of Health and Human Services that reflects the excess of the rate of premium growth between the preceding calendar year and 2013 over the rate of income growth for the period.

(iii) *Plan year.* For purposes of this paragraph (e), *plan year* means the eligible employer-sponsored plan's regular 12-month coverage period (or the remainder of a 12-month coverage period for a new employee or an individual who enrolls during a special enrollment period).

(3) *Individuals eligible for coverage under eligible employer-sponsored plans*—(i) *Eligibility*—(A) *In general.* Except as provided in paragraph (e)(3)(i)(B) of this section, an employee or related individual (as defined in paragraph (e)(3)(ii)(B) of this section) is treated as eligible for coverage under an eligible employer-sponsored plan for a month during a plan year if the employee or related individual could have enrolled in the plan for any day in that month during an open or special enrollment period, regardless of whether the employee or related individual is eligible for any other type of minimum essential coverage. For purposes of this paragraph (e)(3), an employee eligible for coverage under an eligible employer-sponsored plan offered by the employee's employer is not treated as eligible as a related individual for coverage under an eligible employer-sponsored plan (for example, an eligible employer-sponsored plan offered by the employer of the employee's spouse) for any month included in the plan year of the eligible employer-sponsored plan offered by the employee's employer.

(B) *Special rule for continuation coverage.* An individual who may enroll in continuation coverage required under Federal law or a State law that provides comparable continuation coverage is eligible for coverage under an eligible employer-sponsored plan only if the individual enrolls in the coverage.

(ii) *Required contribution for individuals eligible for coverage under an eligible employer-sponsored plan*—(A) *Employees.* In the case of an employee who is eligible to purchase coverage under an eligible employer-sponsored plan sponsored by the employee's employer, the required contribution is the portion of the annual premium that the employee would pay (whether though salary reduction or otherwise) for the lowest cost self-only coverage.

(B) *Individuals related to employees.* In the case of an individual who is eligible for coverage under an eligible employer-sponsored plan because of a relationship to an employee and for whom a personal exemption deduction under section 151 is claimed on the employee's Federal income tax return (related individual), the required contribution is the portion of the annual premium that the employee would pay (whether through salary reduction or otherwise) for the lowest cost family coverage that would cover the employee and all related individuals who are included in the employee's family and are not otherwise exempt under § 1.5000A–3.

(C) *Required contribution for part-year period.* For each individual described in paragraph (e)(3)(ii)(A) or (e)(3)(ii)(B) of this section, affordability under paragraph (e)(3) of this section is determined separately for each employment period that is less than a full calendar year or for the portions of an employer's plan year that fall in different taxable years of the individual. Coverage under an eligible employer-sponsored plan is affordable for a part-year period if the annualized required contribution for self-only coverage (in

the case of the employee) or family coverage (in the case of a related individual) under the plan for the part-year period does not exceed the required contribution percentage of the individual's household income for the taxable year. The annualized required contribution is the required contribution determined under paragraph (e)(3)(ii)(A) or (e)(3)(ii)(B) of this section for the part-year period times a fraction, the numerator of which is 12 and the denominator of which is the number of months in the part-year period during the individual's taxable year. Only full calendar months are included in the computation under this paragraph (e)(3)(ii)(C).

(D) *Examples.* The following examples illustrate the application of this paragraph (e)(3). Unless stated otherwise, in each example, each individual's taxable year is a calendar year, the individual is ineligible for any other exemptions described in this section for a month, the rate of premium growth has not exceeded the rate of income growth since 2013, and the individual's employer offers a single plan that uses a calendar plan year and is an eligible employer-sponsored plan as described in § 1.5000A–2(c).

Example 1. Unmarried employee with no dependents. Taxpayer A is an unmarried individual with no dependents. In November 2015, A is eligible to enroll in self-only coverage under a plan offered by A's employer for calendar year 2016. If A enrolls in the coverage, A is required to pay $5,000 of the total annual premium. In 2016, A's household income is $60,000. Under paragraph (e)(3)(ii)(A) of this section, A's required contribution is $5,000, the portion of the annual premium A pays for self-only coverage. Under paragraph (e)(1) of this section, A lacks affordable coverage for 2016 because A's required contribution ($5,000) is greater than 8 percent of A's household income ($4,800).

Example 2. Married employee with dependents. Taxpayers B and C are married and file a joint return for 2016. B and C have two children, D and E. In November 2015, B is eligible to enroll in self-only coverage under a plan offered by B's employer for calendar year 2016 at a cost of $5,000 to B. C, D, and E are eligible to enroll in family coverage under the same plan for 2016 at a cost of $20,000 to B. B, C, D, and E's household income is $90,000. Under paragraph (e)(3)(ii)(A) of this section, B's required contribution is B's share of the cost for self-only coverage, $5,000. Under paragraph (e)(1) of this section, B has affordable coverage for 2016 because B's required contribution ($5,000) does not exceed 8 percent of B's household income ($7,200). Under paragraph (e)(3)(ii)(B) of this section, the required contribution for C, D, and E is B's share of the cost for family coverage, $20,000. Under paragraph (e)(1) of this section, C, D, and E lack affordable coverage for 2016 because their required contribution ($20,000) exceeds 8 percent of their household income ($7,200).

Example 3. Plan year is a fiscal year. (i) Taxpayer F is an unmarried individual with no dependents. In June 2015, F is eligible to enroll in self-only coverage under a plan offered by F's employer for the period July 2015 through June 2016 at a cost to F of $4,750. In June 2016, F is eligible to enroll in self-only coverage under a plan offered by F's employer for the period July 2016 through June 2017 at a cost to F of $5,000. In 2016, F's household income is $60,000.

(ii) Under paragraph (e)(3)(ii)(C) of this section, F's annualized required contribution for the period January 2016 through June 2016 is $4,750 ($2,375 paid for premiums in 2016 × 12/6). Under paragraph (e)(1) of this section, F has affordable coverage for January 2016 through June 2016 because F's annualized required contribution ($4,750) does not exceed 8 percent of F's household income ($4,800).

(iii) Under paragraph (e)(3)(ii)(C) of this section, F's annualized required contribution for the period July 2016 to December 2016 is $5,000 ($2,500 paid for premiums in 2016 x 12/6). Under paragraph (e)(1) of this section, F lacks affordable coverage for July 2016 through December 2016 because F's annualized required contribution ($5,000) exceeds 8 percent of F's household income ($4,800).

Example 4. Eligibility for coverage under an eligible employer-sponsored plan and under government sponsored coverage. Taxpayer G is unmarried and has one child, H. In November 2015, H is eligible to enroll in family coverage under a plan offered by G's employer for 2016. H is also eligible to enroll in the CHIP program for 2016. Under paragraph (e)(3)(i) of this section, H is treated as eligible for coverage under an eligible employer-sponsored plan for each month in 2016, notwithstanding that H is eligible to enroll in government sponsored coverage for the same period.

(4) *Individuals ineligible for coverage under eligible employer-sponsored plans*—(i) *Eligibility for coverage other than an eligible employer-sponsored plan.* An individual is treated as ineligible for coverage under an eligible employer-sponsored plan for a month that is not described in paragraph (e)(3)(i) of this section.

(ii) *Required contribution for individuals ineligible for coverage under eligible employer-sponsored plans*—(A) *In general.* In the case of an individual who is ineligible for coverage under an eligible employer-sponsored plan, the required contribution is the premium for the applicable plan, reduced by the maximum amount of any credit allowable under section 36B for the taxable year (determined as if the individual was covered for the entire taxable year by a qualified health plan offered through the Exchange serving the rating area where the individual resides).

(B) *Applicable plan*—(*1*) *In general.* Except as provided in paragraph (e)(4)(ii)(B)(*2*) of this section, *applicable plan* means the single lowest cost bronze plan available in the individual market through the Exchange serving the rating area in which the individual resides (without regard to whether the individual purchased a qualified health plan though the Exchange) that would cover all individuals in the individual's nonexempt family. For purposes of this paragraph (e)(4), an individual's *nonexempt family* means the family (as defined in § 1.5000A–1(d)(6)) that includes the individual, excluding any family members who are otherwise exempt under section 1.5000A–3 or are treated as eligible for coverage under an eligible employer-sponsored plan under paragraph (e)(3)(i) of this section. The premium for the applicable plan takes into account rating factors (for example, an individual's age) that an Exchange would use to determine the cost of coverage.

(*2*) *Lowest cost bronze plan does not cover all individuals included in the taxpayer's nonexempt family*—(*i*) *In general.* If the Exchange serving the rating area where the individual resides does not offer a single bronze plan that would cover all individuals included in the individual's nonexempt family, the premium for the applicable plan is the sum of the premiums for the lowest cost bronze plans that are offered through the Exchanges serving the rating areas where one or more of the individuals reside and that would, in the aggregate, cover all the individuals in the individual's nonexempt family.

(*ii*) *Simplified method for applicable plan identification.* In lieu of the premium for the applicable plan determined under paragraph (e)(4)(ii)(B)(*2*)(*i*) of this section, a taxpayer may irrevocably elect to use the premium for the lowest cost bronze plan offered by the Exchange serving the rating area where the individual resides that would cover individuals with the characteristics (for example, the individuals' ages) of the individuals in the taxpayer's nonexempt family. For example, if a taxpayer's nonexempt family includes one adult and two children, the taxpayer may elect to use the premium for the lowest cost bronze plan that would cover individuals having the same characteristics as the adult and the two children in the taxpayer's nonexempt family. A taxpayer makes the election by using the simplified method described in this paragraph (e)(4)(ii)(B)(*2*)(*ii*).

(C) *Credit allowable under section 36B.* For purposes of paragraph (e)(4)(ii)(A) of this section, *credit*

allowable under section 36B means the maximum amount of the credit that would be allowable to the individual (or to the taxpayer who can properly claim the individual as a dependent) under section 36B if all members of the individual's nonexempt family enrolled in a qualified health plan through the Exchange serving the rating area where the individual resides.

(D) *Required contribution for part-year period.* For each individual described in paragraph (e)(4)(ii)(A) of this section, affordability under paragraph (e)(4) of this section is determined separately for each period described in paragraph (e)(4)(ii)(E) of this section that is less than a 12-month period. Coverage under a plan is affordable for a part-year period if the annualized required contribution for coverage under the plan for the part-year period does not exceed the required contribution percentage of the individual's household income for the taxable year. The annualized required contribution is the required contribution determined under paragraph (e)(4)(ii)(A) of this section for the part-year period times a fraction, the numerator of which is 12 and the denominator of which is the number of months in the part-year period during the individual's taxable year. Only full calendar months are included in the computation under this paragraph (e)(4)(ii)(D).

(iii) *Examples.* The following examples illustrate the provisions of this paragraph (e)(4). Unless stated otherwise, in each example the taxpayer's taxable year is a calendar year, the rate of premium growth has not exceeded the rate of income growth since 2013, and the taxpayer is ineligible for any of the exemptions described in paragraphs (b) through (i) of this section for a month.

Example 1. Unmarried employee with no dependents. (i) Taxpayer G is an unmarried individual with no dependents. G is ineligible to enroll in any minimum essential coverage other than coverage in the individual market for all months in 2016. The annual premium for the lowest cost bronze self-only plan in G's rating area (G's applicable plan) is $5,000. The adjusted annual premium for the second lowest cost silver self-only plan in G's rating area (G's applicable benchmark plan within the meaning of § 1.36B–3(f)) is $5,500. In 2016 G's household income is $40,000, which is 358 percent of the Federal poverty line for G's family size for the taxable year.

(ii) Under paragraph (e)(4)(ii)(C) of this section, the credit allowable under section 36B is determined pursuant to section 36B. With household income at 358 percent of the Federal poverty line, G's applicable percentage is 9.5. Because each month in 2016 is a coverage month (within the meaning of § 1.36B–3(c)), G's maximum credit allowable under section 36B is the excess of G's premium for the applicable benchmark plan over the product of G's household income and G's applicable percentage ($1,700). Therefore, under paragraph (e)(4)(ii)(A) of this section, G's required contribution is $3,300. Under paragraph (e)(1) of this section, G lacks affordable coverage for 2016 because G's required contribution ($3,300) exceeds 8 percent of G's household income ($3,200).

Example 2. Family. (i) In 2016 Taxpayers M and N are married and file a joint return. M and N have two children, P and Q. M, N, P, and Q are ineligible to enroll in minimum essential coverage other than coverage in the individual market for a month in 2016. The annual premium for M, N, P, and Q's applicable plan is $20,000. The adjusted annual premium for M, N, P, and Q's applicable benchmark plan (within the meaning of § 1.36B–3(f)) is $25,000. M and N's household income is $80,000, which is 347 percent of the Federal poverty line for a family size of 4 for the taxable year.

(ii) Under paragraph (e)(4)(ii)(C) of this section, the credit allowable under section 36B is determined pursuant to section 36B. With household income at 347 percent of the Federal poverty line, the applicable percentage is 9.5. Because each month in 2016 is a coverage month (within the meaning of § 1.36B–3(c)), the maximum credit allowable under section 36B is the excess of the premium for the applicable benchmark plan over the product of the household income and the applicable percentage ($17,400). Therefore, under paragraph (e)(4)(ii)(A) of this section, the required contribution for M, N, P, and Q is $2,600. Under paragraph (f)(2) of this section, M, N, P, and Q have affordable coverage for 2016 because their required contribution ($2,600) does not exceed 8 percent of their household income ($6,400).

Example 3. Family with some members eligible for government sponsored coverage. (i) In 2016 Taxpayers U and V are married and file a joint return. U and V have two children, W and X. U and V are ineligible to enroll in minimum essential coverage other than coverage in the individual market for all months in 2016; however, W and X are eligible for coverage under CHIP for 2016 at an annual cost of $1,000 per child. The annual premium for U, V, W, and X's applicable plan is $20,000. The adjusted annual premium for the second lowest cost silver plan that would cover U and V (the applicable benchmark plan (within the meaning of § 1.36B–3(f)) is $12,500. U and V's household income is $50,000, which is 217 percent of the Federal poverty line for a family size of 4 for the taxable year. W and X do not enroll in CHIP coverage.

(ii) Under paragraph (e)(4)(ii)(C) of this section, the credit allowable under section 36B is determined pursuant to section 36B. With household income at 217 percent of the Federal poverty line, the applicable percentage is 6.89. Each month in 2016 is a coverage month (within the meaning of § 1.36B–3(c)) for U and V, but no months in 2016 are coverage months for W and X because they are eligible for CHIP coverage. The maximum credit allowable under section 36B is the excess of the premium for the applicable benchmark plan over the product of the household income and the applicable percentage ($9,055). Therefore, under paragraph (e)(4)(ii)(A) of this section, the required contribution is $10,945. Under paragraph (e)(1) of this section, U, V, W, and X lack affordable coverage for 2016 because their required contribution ($10,945) exceeds 8 percent of their household income ($4,000).

Example 4. Family with some members enrolled in government sponsored minimum essential coverage. The facts are the same as *Example 3,* except W and X enroll in CHIP coverage on January 1, 2016. Under paragraph (e)(4)(ii)(B), U, V, W, and X are members of U and V's nonexempt family for 2016. Therefore, the annual premium for the applicable plan is the same as in *Example 3* ($20,000). The maximum credit allowable under section 36B is also the same as in *Example 3* ($9,055). Under paragraph (e)(4)(ii)(A) of this section, the required contribution is $10,945. Under paragraph (e)(1) of this section, U and V lack affordable coverage for 2016 because their required contribution ($10,945) exceeds 8 percent of their household income ($4,000).

Example 5. Simplified method for applicable plan identification. (i) In 2016 Taxpayer Y, a 42-year old unmarried individual, lives with her 17-year old nephew, Z. Y properly claims Z as a dependent for 2016. Neither Y nor Z is eligible for minimum essential coverage other than coverage in the individual market in 2016. The Exchange serving the rating area where Y and Z reside does not offer any plan that would cover them both. For 2016, the annual premium for the lowest cost bronze plan covering Y is $5,000, and the annual premium for the lowest cost bronze plan covering Z is $4,500. The premium for the lowest cost bronze plan that would cover individuals with the characteristics of Y and Z that is offered in the Exchange serving the rating area where Y and Z reside is $10,000.

(ii) Under paragraph (e)(4)(ii)(B), Z is included in Y's nonexempt family. Under paragraph (e)(4)(ii)(B)(*2*)(*i*) of this section, the premium for the applicable plan is the sum of the premiums for the lowest cost bronze plans that would cover Y and Z, or $9,500 ($5,000 + $4,500). Alternatively, under paragraph (e)(4)(ii)(B)(*2*)(*ii*) of this section, Y may irrevocably elect to use the premium for the lowest cost bronze plan that would cover individuals with the characteristics of Y and Z that is offered in the Exchange ($10,000) as the premium for the applicable plan in determining qualification for the exemption described in paragraph (e)(1) of this section.

(f) *Household income below filing threshold*—(1) *In general.* An individual is an exempt individual for any taxable year for which the individual's household income is less than the applicable filing threshold.

(2) *Applicable filing threshold*—(i) *In general.* For purposes of this section, *applicable filing threshold* means the amount of gross income that would trigger an individual's requirement to

file a Federal income tax return under section 6012(a)(1).

(ii) *Certain dependents.* The applicable filing threshold for an individual who is properly claimed as a dependent by another taxpayer is equal to the other taxpayer's applicable filing threshold.

(g) *Members of Indian tribes.* An individual is an exempt individual for a month that includes a day on which the individual is a member of an Indian tribe. For purposes of this section, *Indian tribe* means a group or community described in section 45A(c)(6).

(h) *Individuals with hardship exemption certification*—(1) *In general.* An individual is an exempt individual for a month that includes a day on which the individual has in effect a hardship exemption certification described in paragraph (h)(2) of this section.

(2) *Hardship exemption certification.* A hardship exemption certification is issued by an Exchange under section 1311(d)(4)(H) of the Affordable Care Act (42 U.S.C. 18031(d)(4)(H)) and 45 CFR 155.605(g) and 45 CFR 155.615(f) and certifies that an individual has suffered a hardship (as that term is defined in 45 CFR 166.605(g)) with respect to the capability to obtain minimum essential coverage.

(i) [Reserved]

(j) *Individuals with certain short coverage gaps*—(1) *In general.* An individual is an exempt individual for a month the last day of which is included in a short coverage gap.

(2) *Short coverage gap*—(i) *In general. Short coverage gap* means a continuous period of less than three months in which the individual is not covered under minimum essential coverage. If the individual does not have minimum essential coverage for a continuous period of three or more months, none of the months included in the continuous period is treated as included in a short coverage gap.

(ii) *Coordination with other exemptions.* For purposes of this paragraph (j), an individual is treated as having minimum essential coverage for a month in which an individual is exempt under any of paragraphs (a) through (h) of this section.

(iii) *More than one short coverage gap during calendar year.* If a calendar year includes more than one short coverage gap, the exemption provided by this paragraph (j) only applies to the earliest short coverage gap.

(3) *Continuous period*—(i) *In general.* Except as provided in paragraph (j)(3)(ii) of this section, the number of months included in a continuous period is determined without regard to the calendar years in which months included in that period occur.

(ii) *Continuous period straddling more than one taxable year.* If an individual does not have minimum essential coverage for a continuous period that begins in one taxable year and ends in the next, for purposes of applying this paragraph (j) to the first taxable year, the months in the second taxable year included in the continuous period are disregarded. For purposes of applying this paragraph (j) to the second taxable year, the months in the first taxable year included in the continuous period are taken into account.

(4) *Examples.* The following examples illustrate the provisions of this paragraph (j). Unless stated otherwise, in each example the taxpayer's taxable year is a calendar year and the taxpayer is ineligible for any of the exemptions described in paragraphs (a) through (h) of this section for a month.

Example 1. Short coverage gap. Taxpayer D has minimum essential coverage in 2016 from January 1 through March 2. After March 2, D does not have minimum essential coverage until D enrolls in an eligible employer-sponsored plan effective June 15. Under § 1.5000A–1(b), for purposes of section 5000A, D has minimum essential coverage for January, February, March, and June through December. D's continuous period without coverage is 2 months, April and May. April and May constitute a short coverage gap under paragraph (j)(2)(i) of this section.

Example 2. Continuous period of 3 months or more. The facts are the same as in *Example 1,* except D's coverage is not effective until July 1. D's continuous period without coverage is 3 months, April, May, and June. Under paragraph (j)(2)(i) of this section, April, May, and June are not included in a short coverage gap.

Example 3. Short coverage gap following exempt period. Taxpayer E is incarcerated from January 1 through June 2. E enrolls in an eligible employer-sponsored plan effective September 15. Under paragraph (d) of this section, E is exempt for the period January through June. Under paragraph (j)(2)(ii) of this section, E is treated as having minimum essential coverage for this period, and E's continuous period without minimum essential coverage is 2 months, July and August. July and August constitute a short coverage gap under paragraph (j)(2)(i) of this section.

Example 4. Continuous period covering more than one taxable year. Taxpayer F, an unmarried individual with no dependents, has minimum essential coverage for the period January 1 through October 15, 2016. F is without coverage until enrolling in an eligible employer-sponsored plan effective February 15, 2017. F files his Federal income tax return for 2016 on March 10, 2017. Under paragraph (j)(3)(ii) of this section, November and December of 2016 are treated as a short coverage gap. However, November and December of 2016 are included in the continuous period that includes January 2017. The continuous period for 2017 is over 3 months and, therefore, is not a short coverage gap.

Example 5. Enrollment following loss of coverage. The facts are the same as in *Example 4* except F loses coverage on June 15, 2017. F enrolls in a new eligible employer-sponsored plan effective September 15, 2017. The continuous period without minimum essential coverage in July and August of 2017 is two months and, therefore, is a short coverage gap. Because January 2017 was not part of a short coverage gap, the earliest short coverage gap occurring in 2017 is the gap that includes July and August.

Example 6. Multiple coverage gaps. (i) The facts are the same as in *Example 5* except F has minimum essential coverage for November 2016. Under paragraph (j)(3)(ii) of this section, December 2016 is treated as a short coverage gap.

(ii) December 2016 is included in the continuous period that includes January 2017. This continuous period is two months and, therefore, January 2017 is the earliest month in 2017 that is included in a short coverage gap. Under paragraph (j)(2)(iii) of this section, the exemption under this paragraph (j) applies only to January 2017. Thus, the continuous period without minimum essential coverage in July and August of 2017 is not a short coverage gap.

(k) *Claiming exemptions from the shared responsibility payment*—(1) *Exemptions requiring certification by an Exchange.* An individual obtains a religious conscience exemption certification (described in paragraph (a) of this section) or a hardship exemption certification (described in paragraph (h) of this section) from the Exchange serving the rating area where the individual resides. To claim the exemption, the individual includes the information specified in published guidance of general applicability, see § 601.601(d)(2) of this chapter, with the Federal income tax return for the taxable year that includes the months for which the exemption is sought.

(2) *Exemptions that may be certified by an Exchange or claimed on a Federal income tax return*—(i) *Exemption certified by an Exchange.* The exemptions for members of health care sharing ministries (described in paragraph (b) of this section), incarcerated individuals (described in paragraph (d) of this section), and members of Indian tribes (described in paragraph (g) of this section) may be certified in the manner and within the time specified in 45 CFR 155.610. To claim the exemption, an individual includes the information specified in published guidance of general applicability, see § 601.601(d)(2) of this

chapter, with the Federal income tax return for the taxable year that includes the months for which the exemption is sought.

(ii) *Exemption claimed on a Federal income tax return.* Alternatively, an individual, or a taxpayer who may claim the individual as a dependent for the taxable year, may claim the exemptions for members of health care sharing ministries (described in paragraph (b) of this section), incarcerated individuals (described in paragraph (d) of this section), and members of Indian tribes (described in paragraph (g) of this section) without certification by an Exchange by including the information specified in published guidance of general applicability, see § 601.601(d)(2) of this chapter, with the Federal income tax return for the taxable year that includes the months for which the exemption is sought.

(3) *Exemptions that are claimed on Federal income tax returns.* The exemptions for individuals who lack affordable coverage (described in paragraph (e) of this section), individuals with household income below the applicable return filing threshold (described in paragraph (f) of this section), and individuals with short coverage gaps (described in paragraph (j) of this section) may be claimed only by including the information specified in published guidance of general applicability, see § 601.601(d)(2) of this chapter, with the Federal income tax return for the taxable year that includes the months for which the exemption is sought. Taxpayers are not required to file Federal income tax returns solely to claim the exemption for individuals with household income below the applicable return filing threshold (described in paragraph (f) of this section).

§ 1.5000A–4 Computation of shared responsibility payment.

(a) *In general.* For each taxable year the shared responsibility payment is the lesser of—

(1) The sum of the monthly penalty amounts for each individual in the shared responsibility family; or

(2) The sum of the monthly national average bronze plan premiums for the shared responsibility family.

(b) *Monthly penalty amount*—(1) *In general. Monthly penalty amount* means, for a month that a nonexempt individual is not covered under minimum essential coverage, 1/12 multiplied by the greater of—

(i) The flat dollar amount; or

(ii) The excess income amount.

(2) *Flat dollar amount*—(i) *In general. Flat dollar amount* means the lesser of—

(A) The sum of the applicable dollar amounts for all individuals included in the taxpayer's shared responsibility family; or

(B) 300 percent of the applicable dollar amount (determined without regard to paragraph (b)(2)(iii) of this section) for the calendar year with or within which the taxable year ends.

(ii) *Applicable dollar amount.* Except as provided in paragraphs (b)(2)(iii) and (b)(2)(iv) of this section, the applicable dollar amount is—

(A) $95 in 2014;

(B) $325 in 2015; or

(C) $695 in 2016.

(iii) *Special applicable dollar amount for individuals under age 18.* If an individual has not attained the age of 18 on the first day of a month, the applicable dollar amount for the individual is equal to one-half of the applicable dollar amount (as expressed in paragraph (b)(2)(ii) of this section) for the calendar year in which the month occurs. For purposes of this paragraph (b)(2)(iii), an individual attains the age of 18 on the anniversary of the date when the individual was born. For example, an individual born on March 1, 1999, attains the age of 18 on March 1, 2017.

(iv) *Indexing of applicable dollar amount.* In any calendar year after 2016, the applicable dollar amount is $695 as increased by the product of $695 and the cost-of-living adjustment determined under section 1(f)(3) for the calendar year. For purposes of this paragraph (b)(2)(iv) of this section, the cost-of-living adjustment is determined by substituting ''calendar year 2015'' for ''calendar year 1992'' in section 1(f)(3)(B). If any increase under this paragraph (b)(2)(iv) is not a multiple of $50, the increase is rounded to the next lowest multiple of $50.

(3) *Excess income amount*—(i) *In general. Excess income amount* means the product of—

(A) The excess of the taxpayer's household income over the taxpayer's applicable filing threshold (as defined in § 1.5000A–3(f)(2)); and

(B) The income percentage.

(ii) *Income percentage.* For purposes of this section, *income percentage* means—

(A) 1.0 percent for taxable years beginning in 2013;

(B) 1.0 percent for taxable years beginning in 2014;

(C) 2.0 percent for taxable years beginning in 2015; or

(D) 2.5 percent for taxable years beginning after 2015.

(c) *Monthly national average bronze plan premium. Monthly national average bronze plan premium* means, for a month for which a shared responsibility payment is imposed, 1/12 of the annual national average premium for qualified health plans that have a bronze level of coverage, would provide coverage for the taxpayer's shared responsibility family members who do not have minimum essential coverage for the month, and are offered through Exchanges for plan years beginning in the calendar year with or within which the taxable year ends.

(d) *Examples.* The following examples illustrate the provisions of this section. In each example the taxpayer's taxable year is a calendar year and all members of the taxpayer's shared responsibility family are ineligible for any of the exemptions described in § 1.5000A–3 for a month.

Example 1. Unmarried taxpayer without minimum essential coverage. (i) In 2016 Taxpayer G is an unmarried individual with no dependents. G does not have minimum essential coverage for any month in 2016. G's household income is $120,000. G's applicable filing threshold is $12,000. The annual national average bronze plan premium for G is $5,000.

(ii) For each month in 2016, under paragraph (b)(2)(ii) of this section, G's applicable dollar amount is $695. Under paragraph (b)(2) of this section, G's flat dollar amount is $695 (the lesser of $695 and $2,085 ($695 × 3)). Under paragraph (b)(3) of this section, G's excess income amount is $2,700 (($120,000 − $12,000) × 0.025). Therefore, under paragraph (b)(1) of this section, the monthly penalty amount is $225 (the greater of $58 ($695/12) or $225 ($2,700/12)).

(iii) The sum of the monthly penalty amounts is $2,700 ($225 × 12). The sum of the monthly national average bronze plan premiums is $5,000 ($5,000/12 × 12). Therefore, under paragraph (a) of this section, the shared responsibility payment imposed on G for 2016 is $2,700 (the lesser of $2,700 or $5,000).

Example 2. Part-year coverage. The facts are the same as in *Example 1,* except G has minimum essential coverage for January through June. The sum of the monthly penalty amounts is $1,350 ($225 × 6). The sum of the monthly national average bronze plan premiums is $2,500 ($5,000/12 × 6). Therefore, under paragraph (a) of this section, the shared responsibility payment imposed on G for 2016 is $1,350 (the lesser of $1,350 or $2,500).

Example 3. Family without minimum essential coverage. (i) In 2016, Taxpayers H and J are married and file a joint return. H and J have three children: K, age 21, L, age 15, and M, age 10. No member of the family has minimum essential coverage for any month in 2016. H and J's household income is $120,000. H and J's applicable filing threshold is $24,000. The annual national average bronze plan premium for a family of 5 (2 adults, 3 children) is $20,000.

(ii) For each month in 2016, under paragraphs (b)(2)(ii) and (b)(2)(iii) of this section, the applicable dollar amount is $2,780 (($695 × 3 adults) + (($695/2) × 2

children)). Under paragraph (b)(2)(i) of this section, the flat dollar amount is $2,085 (the lesser of $2,780 and $2,085 ($695 × 3)). Under paragraph (b)(3) of this section, the excess income amount is $2,400 (($120,000 − $24,000) × 0.025). Therefore, under paragraph (b)(1) of this section, the monthly penalty amount is $200 (the greater of $173.75 ($2,085/12) or $200 ($2,400/12)).

(iii) The sum of the monthly penalty amounts is $2,400 ($200 × 12). The sum of the monthly national average bronze plan premiums is $20,000 ($20,000/12 × 12). Therefore, under paragraph (a) of this section, the shared responsibility payment imposed on H and J for 2016 is $2,400 (the lesser of $2,400 or $20,000).

Example 4. Change in shared responsibility family during the year. (i) The facts are the same as in *Example 3,* except J has minimum essential coverage for January through June. The annual national average bronze plan premium for a family of 4 (1 adult, 3 children) is $18,000.

(ii) For the period January through June 2016, under paragraphs (b)(2)(ii) and (b)(2)(iii) of this section the applicable dollar amount is $2,085 (($695 × 2 adults) + (($695/2) × 2 children)). Under paragraph (b)(2)(i) of this section, the flat dollar amount is $2,085 (the lesser of $2,085 or $2,085 ($695 × 3)).

(iii) For the period July through December 2016, the applicable dollar amount is $2,780 (($695 × 3 adults) + (($695/2) × 2 children)). Under paragraph (b)(2) of this section, the flat dollar amount is $2,085 (the lesser of $2,780 or $2,085 ($695 × 3)). Under paragraph (b)(3) of this section, the excess income amount is $2,400 (($120,000 − $24,000) × 0.025). Therefore, under paragraph (b)(1) of this section, for January through June the monthly penalty amount is $200 (the greater of $173.75 ($2,085/12) or $200 ($2,400/12)). The monthly penalty amount for July through December is $200 (the greater of $173.75 ($2,085/12) or $200 ($2,400/12)).

(iv) The sum of the monthly penalty amounts is $2,400 ($200 × 12). The sum of the monthly national average bronze plan premiums is $19,000 ((($18,000/12) × 6) + (($20,000/12) × 6))). Therefore, under paragraph (a) of this section, the shared responsibility payment imposed on H and J for 2016 is $2,400 (the lesser of $2,400 or $19,000).

Example 5. Eighteenth birthday during the year. (i) In 2016 Taxpayers S and T are married and file a joint return. S and T have one child, U, who turns 18 years old on June 28. No member of the family has minimum essential coverage for any month in 2016. S and T's household income is $60,000. S and T's applicable filing threshold is $24,000. The annual national average bronze plan premium for a family of 3 (2 adults, 1 child) is $15,000.

(ii) For the period January through June 2016, under paragraphs (b)(2)(ii) and (b)(2)(iii) of this section, the applicable dollar amount is $1,737.50 (($695 × 2 adults) + ($695/2) × 1 child)). Under paragraph (b)(2) of this section, the flat dollar amount is $1,737.50 (the lesser of $1,737.50 or $2,085 ($695 × 3)).

(iii) For the period July through December 2016, the applicable dollar amount is $2,085 ($695 × 3). Under paragraph (b)(2) of this section, the flat dollar amount is $2,085 (the lesser of $2,085 or $2,085 ($695 × 3)). Under paragraph (b)(3) of this section, the excess income amount is $900 (($60,000 − $24,000) × 0.025). Therefore, under paragraph (b)(1) of this section, for January through June the monthly penalty amount is $144.79 (the greater of $144.79 ($1,737.50/12) or $75 ($900/12)). The monthly penalty amount for July through December is $173.75 (the greater of $173.75 ($2,085/12) or $75 ($900/12)).

(iv) The sum of the monthly penalty amounts is $1,911.24 (($144.79 × 6) + ($173.75 × 6)). The sum of the monthly national average bronze plan premiums is $15,000 ($15,000/12 × 12). Therefore, under paragraph (a) of this section, the shared responsibility payment imposed on H and J for 2016 is $1,911.24 (the lesser of $1,911.24 or $15,000).

§ 1.5000A–5 Administration and procedure.

(a) *In general.* A taxpayer's liability for the shared responsibility payment for a month must be reported on the taxpayer's Federal income tax return for the taxable year that includes the month. The time for assessing the shared responsibility payment is the same as that prescribed by section 6501 for the taxable year to which the Federal income tax return on which the shared responsibility payment is to be reported relates. The shared responsibility payment is payable upon notice and demand by the Secretary, and except as provided in paragraph (b) of this section, is assessed and collected in the same manner as an assessable penalty under subchapter B of chapter 68 of the Internal Revenue Code. Therefore, the shared responsibility payment is not subject to deficiency procedures of subchapter B of chapter 63 of the Internal Revenue Code. Interest on this payment accrues in accordance with the rules in section 6601.

(b) *Special rules.* Notwithstanding any other provision of law—

(1) *Waiver of criminal penalties.* In the case of a failure by a taxpayer to timely pay the shared responsibility payment, the taxpayer is not subject to criminal prosecution or penalty for the failure.

(2) *Limitations on liens and levies.* If a taxpayer fails to pay the shared responsibility payment imposed by this section and §§ 1.5000A–1 through 1.5000A–4, the Secretary will not file notice of lien with respect to any property of the taxpayer, or levy on any such property with respect to such failure.

(3) *Authority to offset against overpayment.* Nothing in this section prohibits the Secretary from offsetting any liability for the shared responsibility payment against any overpayment due the taxpayer, in accordance with section 6402(a).

(c) *Effective/applicability date.* This section and §§ 1.5000A–1 through 1.5000A–4 apply for months beginning after December 31, 2013.

Steven T. Miller,

Deputy Commissioner for Services and Enforcement.

[FR Doc. 2013–02141 Filed 1–30–13; 11:15 am]

BILLING CODE 4830–01–P

DEPARTMENT OF HOMELAND SECURITY

Coast Guard

33 CFR Part 100

[Docket Number USCG–2012–1098]

RIN 1625–AA08

SLR; Fajardo Offshore Grand Prix; Rada Fajardo; Fajardo, PR

AGENCY: Coast Guard, DHS.

ACTION: Notice of Proposed Rulemaking.

SUMMARY: The Coast Guard is establishing a special local regulation on the waters of Rada Fajardo in Fajardo, Puerto Rico during the Fajardo Offshore Grand Prix, a high speed boat race. The event is scheduled to take place on Sunday, March 17, 2013. Approximately 30 high-speed power boats will be participating in the races. It is anticipated that 25 spectator crafts will be present during the races. The special local regulation is necessary for the safety of race participants, participant vessels, spectators, and the general public during the event. The special local regulation will establish the following three areas: One race area, where all persons and vessels, except those persons and vessels participating in the high-speed boat races, are prohibited from entering, transiting through, anchoring in, or remaining within; a buffer zone around the race areas, where all persons and vessels, except those persons and vessels enforcing the buffer zone or transiting to the race area, are prohibited from entering, transiting through, anchoring in, or remaining within; and a spectator area, where all vessels are prohibited from anchoring and from traveling in excess of wake speed, unless authorized by the Captain of the Port San Juan or a designated representative.

DATES: Comments and related material must be received by the Coast Guard on or before February 7, 2013.

Requests for public meetings must be received by the Coast Guard on or before February 7, 2013.

ADDRESSES: You may submit comments identified by docket number using any one of the following methods:

(1) *Federal eRulemaking Portal: http://www.regulations.gov.*

(2) *Fax:* 202–493–2251.

(3) *Mail or Delivery:* Docket Management Facility (M–30), U.S. Department of Transportation, West Building Ground Floor, Room W12–140, 1200 New Jersey Avenue SE., Washington, DC 20590–0001. Deliveries accepted between 9 a.m. and 5 p.m., Monday through Friday, except Federal holidays. The telephone number is 202–366–9329.

See the ''Public Participation and Request for Comments'' portion of the **SUPPLEMENTARY INFORMATION** section below for further instructions on submitting comments. To avoid duplication, please use only one of these three methods.

FOR FURTHER INFORMATION CONTACT: If you have questions on this rule, call or email CWO Anthony Cassisa, Sector San Juan Prevention Department, Coast Guard; telephone (787) 289–2073, email *Anthony.J.Cassisa@uscg.mil.* If you have questions on viewing or submitting material to the docket, call Renee V. Wright, Program Manager, Docket Operations, telephone (202) 366–9826.

SUPPLEMENTARY INFORMATION:

Table of Acronyms

DHS Department of Homeland Security
FR **Federal Register**
NPRM Notice of Proposed Rulemaking

A. Public Participation and Request for Comments

We encourage you to participate in this rulemaking by submitting comments and related materials. All comments received will be posted without change to *http://www.regulations.gov* and will include any personal information you have provided.

1. Submitting Comments

If you submit a comment, please include the docket number for this rulemaking, indicate the specific section of this document to which each comment applies, and provide a reason for each suggestion or recommendation. You may submit your comments and material online at *http://www.regulations.gov,* or by fax, mail, or hand delivery, but please use only one of these means. If you submit a comment online, it will be considered received by the Coast Guard when you successfully transmit the comment. If you fax, hand deliver, or mail your comment, it will be considered as having been received by the Coast Guard when it is received at the Docket Management Facility. We recommend that you include your name and a mailing address, an email address, or a telephone number in the body of your document so that we can contact you if we have questions regarding your submission.

To submit your comment online, go to *http://www.regulations.gov,* type the docket number USCG–2012–1098 in the ''SEARCH'' box and click ''SEARCH.'' Click on ''Submit a Comment'' on the line associated with this rulemaking.

If you submit your comments by mail or hand delivery, submit them in an unbound format, no larger than 8½ by 11 inches, suitable for copying and electronic filing. If you submit comments by mail and would like to know that they reached the Facility, please enclose a stamped, self-addressed postcard or envelope. We will consider all comments and material received during the comment period and may change the rule based on your comments.

2. Viewing Comments and Documents

To view comments, as well as documents mentioned in this preamble as being available in the docket, go to *http://www.regulations.gov,* type the docket number USCG–2012–1098 in the ''SEARCH'' box and click ''SEARCH.'' Click on Open Docket Folder on the line associated with this rulemaking. You may also visit the Docket Management Facility in Room W12–140 on the ground floor of the Department of Transportation West Building, 1200 New Jersey Avenue SE., Washington, DC 20590, between 9 a.m. and 5 p.m., Monday through Friday, except Federal holidays.

3. Privacy Act

Anyone can search the electronic form of comments received into any of our dockets by the name of the individual submitting the comment (or signing the comment, if submitted on behalf of an association, business, labor union, etc.). You may review a Privacy Act notice regarding our public dockets in the January 17, 2008, issue of the **Federal Register** (73 FR 3316).

4. Public Meeting

We do not now plan to hold a public meeting. But you may submit a request for one, using one of the methods specified under **ADDRESSES**. Please explain why you believe a public meeting would be beneficial. If we determine that one would aid this rulemaking, we will hold one at a time and place announced by a later notice in the **Federal Register**.

B. Regulatory History and Information

The current regulations under 33 CFR 100 address safety for reoccurring marine events. This marine event does not appear in the current regulations; however, as it is a regulation to provide effective control over regattas and marine parades on the navigable waters of the United States so as to insure safety of life in the regatta or marine parade area, this marine event therefore needs to be temporarily added.

C. Basis and Purpose

The legal basis for the rule is the Coast Guard's authority to establish special local regulations: 33 U.S.C. 1233. The purpose of the rule is to ensure safety of life on navigable waters of the United States during the Fajardo Offshore Grand Prix.

D. Discussion of Proposed Rule

On March 17, 2013, Puerto Rico Offshore Series, Inc. is sponsoring the Fajardo Offshore Grand Prix, a series of high-speed boat races. The races will be held on the waters of Rada Fajardo in Fajardo, Puerto Rico. Approximately 30 high-speed power boats will be participating in the races. It is anticipated that approximately 25 spectator vessels will be present during the races.

The special local regulations encompass certain waters of Rada Fajardo in Fajardo, Puerto Rico. The special local regulations will be enforced from 1 p.m. until 3 p.m. on March 17, 2013. The special local regulations consist of the following three areas: (1) A race area, where all persons and vessels, except those persons and vessels participating in the high-speed boat races, are prohibited from entering, transiting through, anchoring in, or remaining within; (2) a buffer zone around the race area, where all persons and vessels, except those persons and vessels enforcing the buffer zone or participants transiting to the race area, are prohibited from entering, transiting through, anchoring in, or remaining within; and (3) a spectator area, where all vessels are prohibited from anchoring and from traveling in excess of wake speed unless authorized by the Captain of the Port San Juan or a designated representative. Persons and vessels may request authorization to enter, transit through, anchor in, or remain within the race area, buffer zone, or spectator area by contacting the Captain of the Port San Juan by telephone at (787) 289–2041, or a designated representative via VHF radio on channel 16. If authorization to enter, transit through, anchor in, or remain

within the race area, buffer zone, or spectator area is granted by the Captain of the Port San Juan or a designated representative, all persons and vessels receiving such authorization must comply with the instructions of the Captain of the Port San Juan or a designated representative. The Coast Guard will provide notice of the special local regulations by Local Notice to Mariners, Broadcast Notice to Mariners, and on-scene designated representatives.

E. Regulatory Analyses

We developed this proposed rule after considering numerous statutes and executive orders related to rulemaking. Below we summarize our analyses based on a number of these statutes or executive orders.

1. Regulatory Planning and Review

This proposed rule is not a significant regulatory action under section 3(f) of Executive Order 12866, Regulatory Planning and Review, as supplemented by Executive Order 13563, Improving Regulation and Regulatory Review, and does not require an assessment of potential costs and benefits under section 6(a)(3) of Executive Order 12866 or under section 1 of Executive Order 13563. The Office of Management and Budget has not reviewed it under those Orders.

The economic impact of this rule is not significant for the following reasons: (1) The special local regulations will be enforced for only two hours; (2) although persons and vessels will not be able to enter, transit through, anchor in, or remain within the race area and buffer zone, or anchor in the spectator area, without authorization from the Captain of the Port San Juan or a designated representative, they may operate in the surrounding area during the enforcement period; (3) persons and vessels may still enter, transit through, anchor in, or remain within the race area and buffer zone, or anchor in the spectator area, during the enforcement period if authorized by the Captain of the Port San Juan or a designated representative; and (4) the Coast Guard will provide advance notification of the special local regulations to the local maritime community by Local Notice to Mariners and Broadcast Notice to Mariners.

2. Impact on Small Entities

Under the Regulatory Flexibility Act (5 U.S.C. 601–612), we have considered the impact of this proposed rule on small entities. The Coast Guard certifies under 5 U.S.C. 605(b) that this proposed rule will not have a significant economic impact on a substantial number of small entities.

This rule may affect the following entities, some of which may be small entities: The owners or operators of vessels intending to enter, transit through, anchor in, or remain within that portion of Rada Fajardo encompassed within the special local regulations from 1 p.m. until 3 p.m. on March 17, 2013. For the reasons discussed in the Regulatory Planning and Review section above, this rule will not have a significant economic impact on a substantial number of small entities.

If you think that your business, organization, or governmental jurisdiction qualifies as a small entity and that this rule would have a significant economic impact on it, please submit a comment (see **ADDRESSES**) explaining why you think it qualifies and how and to what degree this rule would economically affect it.

3. Assistance for Small Entities

Under section 213(a) of the Small Business Regulatory Enforcement Fairness Act of 1996 (Pub. L. 104–121), we want to assist small entities in understanding this proposed rule. If the rule would affect your small business, organization, or governmental jurisdiction and you have questions concerning its provisions or options for compliance, please contact the person listed in the **FOR FURTHER INFORMATION CONTACT**, above. The Coast Guard will not retaliate against small entities that question or complain about this proposed rule or any policy or action of the Coast Guard.

4. Collection of Information

This proposed rule will not call for a new collection of information under the Paperwork Reduction Act of 1995 (44 U.S.C. 3501–3520).

5. Federalism

A rule has implications for federalism under Executive Order 13132, Federalism, if it has a substantial direct effect on the States, on the relationship between the national government and the States, or on the distribution of power and responsibilities among the various levels of government. We have analyzed this proposed rule under that Order and determined that this rule does not have implications for federalism.

6. Protest Activities

The Coast Guard respects the First Amendment rights of protesters. Protesters are asked to contact the person listed in the section to coordinate protest activities so that your message can be received without jeopardizing the safety or security of people, places or vessels.

7. Unfunded Mandates Reform Act

The Unfunded Mandates Reform Act of 1995 (2 U.S.C. 1531–1538) requires Federal agencies to assess the effects of their discretionary regulatory actions. In particular, the Act addresses actions that may result in the expenditure by a State, local, or tribal government, in the aggregate, or by the private sector of $100,000,000 (adjusted for inflation) or more in any one year. Though this proposed rule would not result in such an expenditure, we do discuss the effects of this rule elsewhere in this preamble.

8. Taking of Private Property

This proposed rule would not cause a taking of private property or otherwise have taking implications under Executive Order 12630, Governmental Actions and Interference with Constitutionally Protected Property Rights.

9. Civil Justice Reform

This proposed rule meets applicable standards in sections 3(a) and 3(b)(2) of Executive Order 12988, Civil Justice Reform, to minimize litigation, eliminate ambiguity, and reduce burden.

10. Protection of Children From Environmental Health Risks

We have analyzed this proposed rule under Executive Order 13045, Protection of Children from Environmental Health Risks and Safety Risks. This rule is not an economically significant rule and would not create an environmental risk to health or risk to safety that might disproportionately affect children.

11. Indian Tribal Governments

This proposed rule does not have tribal implications under Executive Order 13175, Consultation and Coordination with Indian Tribal Governments, because it would not have a substantial direct effect on one or more Indian tribes, on the relationship between the Federal Government and Indian tribes, or on the distribution of power and responsibilities between the Federal Government and Indian tribes.

12. Energy Effects

This proposed rule is not a ''significant energy action'' under Executive Order 13211, Actions Concerning Regulations That

Significantly Affect Energy Supply, Distribution, or Use.

13. Technical Standards

This proposed rule does not use technical standards. Therefore, we did not consider the use of voluntary consensus standards.

14. Environment

We have analyzed this proposed rule under Department of Homeland Security Management Directive 023–01 and Commandant Instruction M16475.lD, which guide the Coast Guard in complying with the National Environmental Policy Act of 1969 (NEPA)(42 U.S.C. 4321–4370f), and have made a preliminary determination that this action is one of a category of actions that do not individually or cumulatively have a significant effect on the human environment. This proposed rule involves special local regulations issued in conjunction with a regatta or marine parade. This rule is categorically excluded from further review under paragraph 34(h) of Figure 2–1 of the Commandant Instruction. A preliminary environmental analysis checklist supporting this determination and a Categorical Exclusion Determination are available in the docket where indicated under **ADDRESSES**. We seek any comments or information that may lead to the discovery of a significant environmental impact from this proposed rule.

List of Subjects in 33 CFR Part 100

Marine safety, Navigation (water), Reporting and recordkeeping requirements, Waterways.

For the reasons discussed in the preamble, the Coast Guard proposes to amend 33 CFR part 100 as follows:

PART 100—SAFETY OF LIFE ON NAVIGABLE WATERS

■ 1. The authority citation for part 100 continues to read as follows:

Authority: 33 U.S.C. 1233.

■ 2. Add a temporary § 100.35T07–1098 to read as follows:

§ 100.35T07–1098 Special Local Regulations; Fajardo Offshore Grand Prix, Rada Fajardo; Fajardo, Puerto Rico.

(a) *Regulated Areas.* The following regulated areas are established as special local regulations. All coordinates are North American Datum 1983.

(1) *Race Area.* All waters of Rada Fajardo encompassed within an imaginary line connecting the following points: Starting at Point 1 in position 18°21.357N, 65°37.203W; thence east to Point 2 in position 18°21.334N, 65°37.112W; thence northeast to Point 3 in position 18°22.322N, 65°36.481W; thence west to point 4 in position 18°22.365N, 65°36.585W; thence southwest to point 5 in position 18°21.733N, 65°37.112W; thence south back to origin. All persons and vessels, except those persons and vessels participating in the high-speed boat race, are prohibited from entering, transiting through, anchoring in, or remaining within the race area.

(2) *Buffer Zone.* All waters of Rada Fajardo encompassed within an imaginary line connecting the following points: Starting at Point 1 in position 18°22.492N, 65°36.515W; thence east to Point 2 in position 18°22.423N, 65°36.355W; thence southwest to Point 3 in position 18°21.297N, 65°37.110W; thence west to point 4 in position 18°21.369N, 65°37.264W; thence north to point 5 in position 18°21.728N, 65°37.220W; thence northeast back to origin. All persons and vessels except those persons and vessels enforcing the buffer zone, or those persons and vessels participating in the race event and transiting to the race area, are prohibited from entering, transiting through, anchoring in, or remaining within the buffer zone.

(3) *Spectator Area.* All waters of Rada Fajardo excluding the race areas and buffer zone, encompassed within an imaginary line connecting the following points: Starting at Point 1 in position 18°22.540N, 65°36.421W; thence southeast to Point 2 in position 18°22.331N, 65°36.205W; thence southwest to Point 3 in position 18°21.199N, 65°36.995W; thence west to Point 4 in position 18°21.205N, 65°37.243W; thence back to origin. All vessels are prohibited from anchoring and traveling in excess of wake speed in the spectator area. On-scene designated representatives will direct spectator vessels to the spectator area.

(b) *Definition.* The term ''designated representative'' means Coast Guard Patrol Commanders, including Coast Guard coxswains, petty officers, and other officers operating Coast Guard vessels, and Federal, state, and local officers designated by or assisting the Captain of the Port San Juan in the enforcement of the regulated areas.

(c) *Regulations.*

(1) All persons and vessels are prohibited from:

(A) Entering, transiting through, anchoring in, or remaining within the race area, unless participating in the race.

(B) Transiting through, anchoring in, or remaining within the buffer zone, unless enforcing the buffer zone or a race participant transiting to the race area.

(C) All persons and vessels are prohibited from anchoring in, or traveling in excess of wake speed in the spectator zone.

(2) Persons and vessels may request authorization to enter, transit through, anchor in, or remain within the regulated areas by contacting the Captain of the Port San Juan by telephone at (787) 289–2041, or a designated representative via VHF radio on channel 16. If authorization is granted by the Captain of the Port San Juan or a designated representative, all persons and vessels receiving such authorization must comply with the instructions of the Captain of the Port San Juan or a designated representative.

(3) The Coast Guard will provide notice of the regulated areas by Local Notice to Mariners, Broadcast Notice to Mariners, and on-scene designated representatives.

(d) *Enforcement Date.* This rule will be enforced from 1 p.m. until 3 p.m. on March 17, 2013.

Dated: December 31, 2012.

D.M. Flaherty,

Captain, U.S. Coast Guard, Acting, Captain of the Port San Juan.

[FR Doc. 2013–02082 Filed 1–31–13; 8:45 am]

BILLING CODE 9110–04–P

DEPARTMENT OF HOMELAND SECURITY

Coast Guard

33 CFR Part 105

[USCG–2012–0907]

Port Authority Access to Facility Vulnerability Assessments and the Integration of Security Systems

AGENCY: Coast Guard, DHS.

ACTION: Notice and request for comments.

SUMMARY: This notice requests comments from facility owners and operators, State and local law enforcement agencies, port authorities, relevant security industry participants, and all other interested members of the public regarding how to best implement Section 822 of the Coast Guard Authorization Act of 2010. In particular, this notice discusses the Coast Guard's preliminary thoughts on how owners or operators of certain facilities might make their Facility Vulnerability Assessments available to certain law enforcement agencies and port authorities, and integrate their facility security systems with compatible

systems operated or maintained by certain law enforcement agencies and the Coast Guard.

DATES: Comments and related material must either be submitted to our online docket via *http://www.regulations.gov* on or before May 2, 2013 or reach the Docket Management Facility by that date.

ADDRESSES: You may submit comments identified by docket number USCG–2012–0907 using any one of the following methods:

(1) *Federal eRulemaking Portal: http://www.regulations.gov.*

(2) *Fax:* 202–493–2251.

(3) *Mail:* Docket Management Facility (M–30), U.S. Department of Transportation, West Building Ground Floor, Room W12–140, 1200 New Jersey Avenue SE., Washington, DC 20590–0001.

(4) *Hand delivery:* Same as mail address above, between 9 a.m. and 5 p.m., Monday through Friday, except Federal holidays. The telephone number is 202–366–9329.

To avoid duplication, please use only one of these four methods. See the ''Public Participation and Request for Comments'' portion of the **SUPPLEMENTARY INFORMATION** section below for instructions on submitting comments.

FOR FURTHER INFORMATION CONTACT: If you have questions on this notice, call or email Lieutenant Commander José L. Ramírez, Office of Port and Facility Compliance, Cargo and Facility Division (CG–FAC–2), U.S. Coast Guard Headquarters; telephone 202–372–1150, email *Jose.L.Ramirez@uscg.mil*. If you have questions on viewing or submitting material to the docket, call Renee V. Wright, Program Manager, Docket Operations, telephone 202–366–9826.

SUPPLEMENTARY INFORMATION:

Public Participation and Request for Comments

We encourage you to submit comments and related material. All comments received will be posted, without change, to *http://www.regulations.gov* and will include any personal information you have provided.

Submitting comments: If you submit a comment, please include the docket number for this notice (USCG–2012–0907) and provide a reason for each suggestion or recommendation. You may submit your comments and material online, or by fax, mail or hand delivery, but please use only one of these means. We recommend that you include your name and a mailing address, an email address, or a telephone number in the body of your document so that we can contact you if we have questions regarding your submission.

To submit your comment online, go to *http://www.regulations.gov* and use ''USCG–2012–0907'' as your search term. Locate this notice in the search results and click the ''Comment Now'' box to submit your comment. If you submit your comments by mail or hand delivery, submit them in an unbound format, no larger than 8½ by 11 inches, suitable for copying and electronic filing. If you submit them by mail and would like to know that they reached the Facility, please enclose a stamped, self-addressed postcard or envelope. We will consider all comments and material received during the comment period.

Viewing the comments: To view the comments, go to *http://www.regulations.gov* and use ''USCG–2012–0907'' as your search term. Filter the results by checking the box for ''Public Submissions'' on the left side of the page. If you do not have access to the Internet, you may view the docket online by visiting the Docket Management Facility in Room W12–140 on the ground floor of the Department of Transportation West Building, 1200 New Jersey Avenue SE., Washington, DC 20590, between 9 a.m. and 5 p.m., Monday through Friday, except Federal holidays. We have an agreement with the Department of Transportation to use the Docket Management Facility.

Privacy Act: Anyone can search the electronic form of comments received into any of our dockets by the name of the individual submitting the comment (or signing the comment, if submitted on behalf of an association, business, labor union, etc.). You may review a Privacy Act, system of records notice regarding our public dockets in the January 17, 2008, issue of the **Federal Register** (73 FR 3316).

Public meeting: After considering public comments, we may hold one or more future public meetings to provide another forum for public comment. We will announce the time and place of any future public meetings by a later notice in the **Federal Register**.

Background and Purpose

Section 822 of the Coast Guard Authorization Act of 2010 (Pub. L. 111–281, 124 Stat. 2905) (CGAA 2010) amended 46 U.S.C. 70102 by imposing the following mandates: (1) the owner or operator of a facility must make a current copy of the Facility Vulnerability Assessment (FVA) available to the ''port authority with jurisdiction of the facility'' and ''State or local law enforcement agencies;'' and (2) the owner or operator of a facility must ''integrate, to the maximum extent practical,'' the facility's security systems ''with compatible systems operated or maintained by State, law enforcement agencies, and the Coast Guard.'' Section 822 is intended to increase industry stakeholder and government agency (local, State, and Federal) collaboration efforts to identify, prevent, mitigate, and respond to Transportation Security Incidents (TSIs) and other disasters. If the Coast Guard undertakes a future rulemaking to implement Section 822, it would apply to facilities regulated by the Coast Guard under the Maritime Security Transportation Act of 2002 (MTSA).

Existing Coast Guard regulations include a number of provisions that require facility owners and operators to ensure the timely involvement of law enforcement and emergency responders in the event of a TSI or other disaster. Each Facility Security Assessment (FSA) must contain provisions for contingency planning, emergency preparedness and response, and communications capabilities (33 CFR 105.305). Facility Security Officers (FSOs) are required to notify law enforcement personnel and other emergency responders, as soon as possible, to permit their timely response to any TSI (33 CFR 105.205(c)(16)). Each facility access point must provide a primary and backup means of contacting police, security control, or an emergency operations center by telephone, cellular phone, portable radio, or other equivalent means (33 CFR 105.235(c) and (d)). State and local emergency responders are not required to obtain or possess a Transportation Worker Identification Credential (TWIC) in order to gain unescorted access to secure areas of a facility during an emergency situation (33 CFR 101.514(d)).

While the Coast Guard believes that in most instances, the measures detailed above are adequate to ensure the timely involvement of State and local law enforcement and emergency responders, additional regulations may be necessary to close potential gaps that might hinder an appropriate emergency response to a TSI or other disaster.

Preliminary Alternatives Considered

We have considered a number of possible ways to implement the requirements in Section 822. We describe these approaches below to inform the public of our preliminary thoughts on implementing Section 822 and to solicit public comments to gain a better understanding of the issues that concern affected parties, as well as

current industry practices on facility interactions with port authorities, State and local law enforcement agencies, and the Coast Guard. We are also interested in any information and data about the costs associated with these approaches as well as any potential benefit. These comments may assist us in formulating policy as we consider a future rulemaking to implement Section 822.

FVA Sharing Alternatives

• Require each MTSA-regulated facility owner or operator to make a copy of the current FVA available to the cognizant Coast Guard Captain of the Port, port authority, and State and local law enforcement agencies, upon request. The owner or operator would share the FVA via electronically secured transfer. Do facilities store FVAs electronically?

Are you able to save them as an encrypted or password-protected file?

• Require each MTSA-regulated facility owner or operator to proactively provide a copy of the current FVA to the port authority and State and local law enforcement agencies at a prescribed time interval (as opposed to making copies of FVAs available to the port authorities and law enforcement upon request). The owner or operator would share the FVA via electronically secured transfer.

Are you able to encrypt or password-protect the FVA electronic copy and/or deliver it on a password-protected CD, flash drive, or other storage medium?

• Require each MTSA-regulated facility owner or operator to share the current FVA with the port authority and State and local law enforcement agencies annually at the annual exercise required under 33 CFR 105.220 or at a newly required annual FVA sharing meeting.

• Require each MTSA-regulated facility owner or operator to share the current FVA with the port authority and State and local law enforcement agencies during the regularly scheduled 5-year resubmission process of the Facility Security Plan (FSP).

• In addition to the requirement to share the current FVA, require each MTSA-regulated facility owner or operator to make the Security Measures Summary (CG–6025) available to the relevant government authorities and law enforcement agencies for review at the end of the required annual exercise or equivalent (33 CFR 105.220).

• In addition to the requirement to share the current FVA, require each MTSA-regulated facility owner or operator to update the FSP to incorporate FVA-sharing measures.

Security System Integration Alternatives

• Require each MTSA-regulated facility owner or operator to have and demonstrate via annual exercises the ability to provide manual alerts regarding a TSI to appropriate State and local law enforcement agencies and the Coast Guard.

Is 15 minutes a reasonable estimate of the additional time needed to comply with this requirement?

• Require each MTSA-regulated facility owner or operator to have and demonstrate via annual exercises the ability to provide automated alerts regarding a TSI to appropriate State and local law enforcement agencies and the Coast Guard.

Is 15 minutes a reasonable estimate of the additional time needed to comply with this requirement?

• Require each MTSA-regulated facility owner or operator to make security data feeds regarding a TSI (e.g., alerts, video feeds, alarms, etc.) available to appropriate State and local law enforcement agencies and the Coast Guard.

Do appropriate levels of technology exist at both the facility and receiving government agency to comply with this requirement, which would consist of sharing telecommunications information such as Internet addresses, phone numbers, passwords, and encryption codes?

• Require each MTSA-regulated facility owner or operator to incorporate a technological solution that integrates their electronic surveillance and communications systems with compatible systems operated or maintained by the appropriate State and local law enforcement agencies and the Coast Guard. There is a range of possible methods for integrating security systems, including Internet connectivity, dedicated telephone lines, and other forms of security system integration.

Information Requested

1. We request comments on the feasibility, costs, and benefits of each of the preliminary alternatives described above. Please be as specific as possible. For estimates of costs a break-out by specific cost element would be preferable to a lump sum. For example, provide separate estimates for the equipment, number of hours and type of worker needed to install the equipment (i.e. master electrician, labor, supervisor), number of hours and type of employee (i.e., trainer, mid-level manager) to prepare and execute training, and on-going maintenance costs. Cost estimates can be provided as ranges.

2. We request comments as to whether there are any data, literature, or studies that demonstrate the feasibility, costs, and benefits of each of the preliminary alternatives described above.

3. We request comments from MTSA-regulated facility owners and operators regarding current industry practices with respect to security system integration between the facility and State and local law enforcement agencies, the Coast Guard and, emergency responders.

4. We request comments as to whether the requirement to integrate facility security systems with those of State and local law enforcement agencies, the Coast Guard, and emergency responders should be limited to only those MTSA-regulated facilities that are identified in risk-based and other applicable types of analyses. If so, please identify the characteristics of those facilities.

5. Aside from the preliminary alternatives described above, please provide any other alternatives on preferred ways to implement the requirements in Section 822. For any such alternatives suggested, please include information and data as to the feasibility, costs, and benefits.

6. We request any additional comments from interested parties on the subject matter of this notice.

This notice is issued under authority of 5 U.S.C. 552(a), 46 U.S.C. 70102(c) and 70124.

Dated: January 25, 2013.

P.F. Thomas,

Director, Inspections and Compliance, U.S. Coast Guard.

[FR Doc. 2013–02209 Filed 1–31–13; 8:45 am]

BILLING CODE 9110–04–P

DEPARTMENT OF HOMELAND SECURITY

Coast Guard

33 CFR Part 165

[Docket Number USCG–2012–0365]

RIN 1625–AA00

Safety Zone; Alaska Marine Highway System Port Valdez Ferry Terminal, Port Valdez; Valdez, AK

AGENCY: Coast Guard, DHS.

ACTION: Notice of Proposed Rulemaking.

SUMMARY: The Coast Guard proposes to establish a permanent safety zone on the navigable waters of Port Valdez within a 200-yard radius of the Alaska Marine Highway System (AMHS) Port Valdez Ferry Terminal. The purpose of the safety zone is to restrict all vessels

except AMHS vessels from entering within 200-yards of the AMHS Port Valdez Ferry Terminal whenever an AMHS ferry is underway within 200 yards of the terminal and there is a declared Commercial Salmon Fishery Opener. This safety zone is necessary to provide for the safety of life, property and the environment during periods of vessel traffic congestion during a declared Commercial Salmon Fishery Opener.

DATES: Comments and related material must be received by the Coast Guard on or before May 2, 2013.

ADDRESSES: You may submit comments identified by docket number using any one of the following methods:

(1) *Federal eRulemaking Portal: http://www.regulations.gov.*

(2) *Fax:* 202–493–2251.

(3) *Mail or Delivery:* Docket Management Facility (M–30), U.S. Department of Transportation, West Building Ground Floor, Room W12–140, 1200 New Jersey Avenue SE., Washington, DC 20590–0001. Deliveries accepted between 9 a.m. and 5 p.m., Monday through Friday, except Federal holidays. The telephone number is 202–366–9329.

See the ''Public Participation and Request for Comments'' portion of the **SUPPLEMENTARY INFORMATION** section below for further instructions on submitting comments. To avoid duplication, please use only one of these three methods.

FOR FURTHER INFORMATION CONTACT: If you have questions on this rule, call or email Lieutenant Commander Danielle F. Wiley, Waterways Management Division, U.S. Coast Guard Marine Safety Unit Valdez, telephone 907–835–7223, email *danielle.f.wiley@uscg.mil*. If you have questions on viewing or submitting material to the docket, call Renee V. Wright, Program Manager, Docket Operations, telephone (202) 366–9826.

SUPPLEMENTARY INFORMATION:

Table of Acronyms

DHS Department of Homeland Security
FR **Federal Register**
NPRM Notice of Proposed Rulemaking

A. Public Participation and Request for Comments

We encourage you to participate in this rulemaking by submitting comments and related materials. All comments received will be posted without change to *http://www.regulations.gov* and will include any personal information you have provided.

1. Submitting Comments

If you submit a comment, please include the docket number for this rulemaking, indicate the specific section of this document to which each comment applies, and provide a reason for each suggestion or recommendation. You may submit your comments and material online at *http://www.regulations.gov*, or by fax, mail, or hand delivery, but please use only one of these means. If you submit a comment online, it will be considered received by the Coast Guard when you successfully transmit the comment. If you fax, hand deliver, or mail your comment, it will be considered as having been received by the Coast Guard when it is received at the Docket Management Facility. We recommend that you include your name and a mailing address, an email address, or a telephone number in the body of your document so that we can contact you if we have questions regarding your submission.

To submit your comment online, go to *http://www.regulations.gov*, type the docket number [USCG–2012–0365] in the ''SEARCH'' box and click ''SEARCH.'' Click on ''Submit a Comment'' on the line associated with this rulemaking.

If you submit your comments by mail or hand delivery, submit them in an unbound format, no larger than 8½ by 11 inches, suitable for copying and electronic filing. If you submit comments by mail and would like to know that they reached the Facility, please enclose a stamped, self-addressed postcard or envelope. We will consider all comments and material received during the comment period and may change the rule based on your comments.

2. Viewing Comments and Documents

To view comments, as well as documents mentioned in this preamble as being available in the docket, go to *http://www.regulations.gov*, type the docket number (USCG–2012–0365) in the ''SEARCH'' box and click ''SEARCH.'' Click on Open Docket Folder on the line associated with this rulemaking. You may also visit the Docket Management Facility in Room W12–140 on the ground floor of the Department of Transportation West Building, 1200 New Jersey Avenue SE., Washington, DC 20590, between 9 a.m. and 5 p.m., Monday through Friday, except Federal holidays.

3. Privacy Act

Anyone can search the electronic form of comments received into any of our dockets by the name of the individual submitting the comment (or signing the comment, if submitted on behalf of an association, business, labor union, etc.). You may review a Privacy Act notice regarding our public dockets in the January 17, 2008, issue of the **Federal Register** (73 FR 3316).

4. Public Meeting

We do not now plan to hold a public meeting. But you may submit a request for one on or before April 11, 2013, using one of the methods specified under **ADDRESSES**. Please explain why you believe a public meeting would be beneficial. If we determine that one would aid this rulemaking, we will hold one at a time and place announced by a later notice in the **Federal Register**.

B. Regulatory History and Information

In order to prevent near miss collisions or delays in mooring during the commercial fishing openers, the Coast Guard began issuing temporary final rules to establish temporary safety zones during Commercial Salmon Fishery Openers in 2010. The Coast Guard received no comments or concerns from the public when the temporary final rules were in place.

This Notice of Proposed Rule Making would permanently establish a safety zone of the exact same size and position as that which was established under the temporary final rules.

C. Basis and Purpose

The legal basis for the proposed rule is the Coast Guard's authority to establish limited access areas: 33 U.S.C 1231; 46 U.S.C Chapter 701, 3306, 3703; 50 U.S.C. 191, 195; 33 CFR 1.05–1, 6.04–1, 6.04–6, 160.5; Public Law 107–295, 116 Stat. 2064; Department of Homeland Security Delegation No. 0170.1.

A representative of the Alaska Marine Highway System requested that the Coast Guard establish a safety zone in the immediate vicinity of the AMHS Port Valdez Ferry Terminal whenever a Commercial Salmon Fishery Opener is declared, because of previous incidents of near collisions in the vicinity of the ferry terminal between AMHS ferry vessels and commercial fishing vessels. During Commercial Salmon Fishery Openers, increased vessel traffic in the vicinity of the AMHS Port Valdez Ferry Terminal adds additional congestion to the waterways and is a cause for navigational safety concerns, especially when the commercial fleet is active along the shoreline adjacent to the AMHS Port Valdez Ferry Terminal.

We believe a permanent safety zone is necessary to ensure the safety of vessels

operating in the vicinity of the AMHS Port Valdez Ferry Terminal. The Coast Guard began issuing temporary final rules to establish temporary safety zones during Commercial Salmon Fishery Openers in 2010. Because Commercial Salmon Fishery Openers are not announced until the night before the opener, these temporary final rules were issued late in the evening or at night (becoming effective the following morning) leaving very little time to thoroughly disseminate news of the safety zone to affected waterway users.

The proposed rule would ensure the safety of all vessels in the area during periods of increased vessel traffic because of the Commercial Salmon Fishery Opener. The impact of this rule on commercial and recreational traffic is expected to be minimal because the proposed safety zone will restrict access to only a small portion of the navigable waters of Port Valdez and for a short duration.

D. Discussion of Proposed Rule

The Coast Guard proposes to establish a 200-yard safety zone around the AMHS Port Valdez Ferry Terminal at position 61°07′26″ N; 146°21′50″ W in the navigable waters of Port Valdez. The purpose of the safety zone would be to restrict non-AMHS vessels from entering within a 200-yard radius of the AMHS Port Valdez Ferry Terminal whenever an AMHS ferry is underway within a 200-yard radius of the AMHS Terminal and there is a declared Commercial Salmon Fishery Opener that includes the navigable waters within 200 yards of the terminal. The proposed safety zone would only be enforced when an AMHS ferry is underway within 200 yards of the AMHS Port Valdez Ferry Terminal and there is a declared Commercial Salmon Fishery Opener in effect. The limited size and duration of the proposed safety zone is designed to minimize the impact on other vessels transiting the waters of Port Valdez.

The proposed rule would be enforced whenever an AMHS ferry vessel is underway within 200 yards of the AMHS Port Valdez Ferry Terminal. Enforcement of the safety zone would terminate when the ferry vessel is moored or when the vessel is more than 200 yards away from the terminal.

E. Regulatory Analyses

We developed this proposed rule after considering numerous statutes and executive orders related to rulemaking. Below we summarize our analyses based on a number of these statutes or executive orders.

1. Regulatory Planning and Review

This proposed rule is not a significant regulatory action under section 3(f) of Executive Order 12866, Regulatory Planning and Review, as supplemented by Executive Order 13563, Improving Regulation and Regulatory Review, and does not require an assessment of potential costs and benefits under section 6(a)(3) of Executive Order 12866 or under section 1 of Executive Order 13563. The Office of Management and Budget has not reviewed it under those Orders. The Coast Guard enforcement of this proposed safety zone will be of short duration. The proposed safety zone would be enforced for a limited amount of time, only when there is a declared Commercial Salmon Fishery Opener and there is an AMHS ferry underway within 200 yards of the AMHS Port Valdez Ferry Terminal. Vessels would be able to navigate around the proposed safety zone. Furthermore, vessels may be authorized to transit through the proposed safety zone with the permission of the COTP.

2. Impact on Small Entities

Under the Regulatory Flexibility Act (5 U.S.C. 601–612), we have considered the impact of this proposed rule on small entities. The Coast Guard certifies under 5 U.S.C. 605(b) that this proposed rule would not have a significant economic impact on a substantial number of small entities.

This proposed rule would affect the following entities, some of which might be small entities: The owners or operators of vessels intending to transit or anchor in a portion of the navigable waters of Port Valdez whenever a Commercial Salmon Fishery Opener is declared and there is an AMHS ferry underway within 200 yards of the AMHS Port Valdez Ferry Terminal.

This proposed safety zone would not have a significant economic impact on a substantial number of small entities for the following reasons. This proposed safety zone would be activated, and thus subject to enforcement, only when there is an announced Commercial Salmon Fishery Opener and there is an AMHS ferry underway within 200 yards of the AMHS Port Valdez Terminal. Vessel traffic could pass safely around the proposed safety zone. Before the activation of the zone, we would issue maritime advisories widely available to users of the waterway.

If you think that your business, organization, or governmental jurisdiction qualifies as a small entity and that this rule would have a significant economic impact on it, please submit a comment (see **ADDRESSES**) explaining why you think it qualifies and how and to what degree this rule would economically affect it.

3. Assistance for Small Entities

Under section 213(a) of the Small Business Regulatory Enforcement Fairness Act of 1996 (Pub. L. 104–121), we want to assist small entities in understanding this proposed rule. If the rule would affect your small business, organization, or governmental jurisdiction and you have questions concerning its provisions or options for compliance, please contact the person listed in the **FOR FURTHER INFORMATION CONTACT**, above. The Coast Guard will not retaliate against small entities that question or complain about this proposed rule or any policy or action of the Coast Guard.

4. Collection of Information

This proposed rule will not call for a new collection of information under the Paperwork Reduction Act of 1995 (44 U.S.C. 3501–3520.).

5. Federalism

A rule has implications for federalism under Executive Order 13132, Federalism, if it has a substantial direct effect on the States, on the relationship between the national government and the States, or on the distribution of power and responsibilities among the various levels of government. We have analyzed this proposed rule under that Order and determined that this rule does not have implications for federalism.

6. Protest Activities

The Coast Guard respects the First Amendment rights of protesters. Protesters are asked to contact the person listed in the **FOR FURTHER INFORMATION CONTACT** section to coordinate protest activities so that your message can be received without jeopardizing the safety or security of people, places or vessels.

7. Unfunded Mandates Reform Act

The Unfunded Mandates Reform Act of 1995 (2 U.S.C. 1531–1538) requires Federal agencies to assess the effects of their discretionary regulatory actions. In particular, the Act addresses actions that may result in the expenditure by a State, local, or tribal government, in the aggregate, or by the private sector of $100,000,000 (adjusted for inflation) or more in any one year. Though this proposed rule would not result in such an expenditure, we do discuss the effects of this rule elsewhere in this preamble.

8. Taking of Private Property

This proposed rule would not cause a taking of private property or otherwise have taking implications under Executive Order 12630, Governmental Actions and Interference with Constitutionally Protected Property Rights.

9. Civil Justice Reform

This proposed rule meets applicable standards in sections 3(a) and 3(b)(2) of Executive Order 12988, Civil Justice Reform, to minimize litigation, eliminate ambiguity, and reduce burden.

10. Protection of Children from Environmental Health Risks

We have analyzed this proposed rule under Executive Order 13045, Protection of Children from Environmental Health Risks and Safety Risks. This rule is not an economically significant rule and would not create an environmental risk to health or risk to safety that might disproportionately affect children.

11. Indian Tribal Governments

This proposed rule does not have tribal implications under Executive Order 13175, Consultation and Coordination with Indian Tribal Governments, because it would not have a substantial direct effect on one or more Indian tribes, on the relationship between the Federal Government and Indian tribes, or on the distribution of power and responsibilities between the Federal Government and Indian tribes.

12. Energy Effects

This proposed rule is not a ''significant energy action'' under Executive Order 13211, Actions Concerning Regulations That Significantly Affect Energy Supply, Distribution, or Use.

13. Technical Standards

This proposed rule does not use technical standards. Therefore, we did not consider the use of voluntary consensus standards.

14. Environment

We have analyzed this proposed rule under Department of Homeland Security Management Directive 023–01 and Commandant Instruction M16475.lD, which guide the Coast Guard in complying with the National Environmental Policy Act of 1969 (NEPA) (42 U.S.C. 4321–4370f), and have made a preliminary determination that this action is one of a category of actions that do not individually or cumulatively have a significant effect on the human environment. This proposed rule involves the establishment of a safety zone. This rule is categorically excluded from further review under paragraph 34(g) of Figure 2–1 of the Commandant Instruction. A preliminary environmental analysis checklist supporting this determination and a Categorical Exclusion Determination are available in the docket where indicated under **ADDRESSES**. We seek any comments or information that may lead to the discovery of a significant environmental impact from this proposed rule.

List of Subjects in 33 CFR Part 165

Harbors, Marine safety, Navigation (water), Reporting and recordkeeping requirements, Security measures, Waterways.

For the reasons discussed in the preamble, the Coast Guard proposes to amend 33 CFR part 165 as follows:

PART 165—REGULATED NAVIGATION AREAS AND LIMITED ACCESS AREAS

■ 1. The authority citation for part 165 continues to read as follows:

Authority: 33 U.S.C. 1231; 46 U.S.C. Chapter 701, 3306, 3703; 50 U.S.C. 191, 195; 33 CFR 1.05–1, 6.04–1, 6.04–6, 160.5; Pub. L. 107–295, 116 Stat. 2064; Department of Homeland Security Delegation No. 0170.1.

■ 2. Add § 165.1712 to read as follows:

§ 165.1712 Safety Zone; Alaska Marine Highway System Port Valdez Ferry Terminal, Port Valdez; Valdez, AK.

(a) *Location.* The following area is a safety zone: All navigable waters of Port Valdez extending 200 yards in all directions from the edges of the Alaska Marine Highway System Terminal dock located in Port Valdez at 61°07′26″ N and 146°21′50″ W.

(b) *Enforcement period.* The rule will be enforced whenever there is an Alaska Marine Highway System Ferry vessel transiting within the area described in paragraph (a) and there is a Commercial Salmon Fishery Opener that includes the navigable waters within the safety zone. Each enforcement period will be announced by a broadcast notice to mariners when the commercial salmon fishery opener is announced.

(c) *Definition.* The following definitions apply to this section:

(1) The term ''designated representative'' means any Coast Guard commissioned, warrant or petty officer of the U. S. Coast Guard who has been designated by the Captain of the Port, Prince William Sound, to act on his or her behalf.

(2) The term ''official patrol vessel'' may consist of any Coast Guard, Coast Guard Auxiliary, state, or local law enforcement vessels assigned or approved by the COTP, Prince William Sound.

(3) The term ''AMHS vessel'' means any vessel owned or operated by the Alaska Marine Highway System, including, but not limited to: M/V AURORA, M/V CHENEGA, M/V COLUMBIA, M/V FAIRWEATHER, M/V KENNICOTT, M/V LECONTE, M/V LITUYA, M/V MALASPINA, M/V MATANUSKA, M/V TAKU and M/V TUSTUMENA.

(d) *Regulations.*

(1) The general regulations contained in 33 CFR 165.23, as well as the following regulations, apply.

(2) No vessels, except for AMHS ferries and vessels owned or operated by AMHS will be allowed to transit the safety zone without the permission of the COTP, Prince William Sound or the designated representative during periods of enforcement.

(3) All persons and vessels shall comply with the instructions of the COTP or the designated representative. Upon being hailed by a U.S. Coast Guard vessel or other official patrol vessel by siren, radio, flashing light or other means, the operator of the hailed vessel shall proceed as directed.

(4) Vessel operators desiring to enter or operate within the regulated area may contact the COTP or the designated representative via VHF channel 16 or 907–835–7205 (Prince William Sound Vessel Traffic Service) to request permission to do so.

(5) The COTP, Prince William Sound may be aided by other Federal, state, borough and local law enforcement officials in the enforcement of this regulation. In addition, members of the Coast Guard Auxiliary may be present to inform vessel operators of this regulation.

Dated: January 11, 2013.

Benjamin J. Hawkins,

Commander, U.S. Coast Guard, Captain of the Port, Prince William Sound.

[FR Doc. 2013–02211 Filed 1–31–13; 8:45 am]

BILLING CODE 9110–04–P

ENVIRONMENTAL PROTECTION AGENCY

40 CFR Parts 52 and 81

[Docket #: EPA–R10–OAR–2012–0017; FRL–9774–8]

Approval and Promulgation of Implementation Plans; Idaho: Sandpoint PM_{10} Nonattainment Area Limited Maintenance Plan and Redesignation Request

AGENCY: Environmental Protection Agency (EPA).

ACTION: Proposed rule.

SUMMARY: The EPA is proposing to approve in part and disapprove in part the Limited Maintenance Plan (LMP) submitted by the State of Idaho on December 14, 2011, for the Sandpoint nonattainment area (Sandpoint NAA) for particulate matter with an aerodynamic diameter less than or equal to a nominal 10 micrometers (PM_{10}), and to approve the State's request to redesignate this area to attainment for the PM_{10} National Ambient Air Quality Standards (NAAQS). The EPA is proposing to disapprove a separable part of the Sandpoint NAA LMP that does not meet LMP eligibility criteria or applicable requirements under the Clean Air Act (CAA). The part of the Sandpoint NAA LMP that the EPA is proposing to approve complies with applicable requirements and meets the requirements of the CAA for full approval. The EPA is also proposing to approve the State's redesignation request because it meets CAA requirements for redesignation.

DATES: Comments must be received on or before March 4, 2013.

ADDRESSES: Submit your comments, identified by Docket ID No. EPA–R10–OAR–2012–0017, by any of the following methods:

A. *www.regulations.gov:* Follow the on-line instructions for submitting comments.

B. *Mail:* Kristin Hall, EPA Region 10, Office of Air, Waste and Toxics (AWT–107), 1200 Sixth Avenue, Suite 900, Seattle, WA 98101.

C. *Email: R10-Public_Comments@epa.gov.*

D. *Hand Delivery:* EPA Region 10 Mailroom, 9th Floor, 1200 Sixth Avenue, Suite 900, Seattle, WA 98101. Attention: Kristin Hall, Office of Air, Waste and Toxics, AWT—107. Such deliveries are only accepted during normal hours of operation, and special arrangements should be made for deliveries of boxed information.

Instructions: Direct your comments to Docket ID No. EPA–R10–OAR–2012–0017. The EPA's policy is that all comments received will be included in the public docket without change and may be made available online at *www.regulations.gov*, including any personal information provided, unless the comment includes information claimed to be Confidential Business Information (CBI) or other information the disclosure of which is restricted by statute. Do not submit information that you consider to be CBI or otherwise protected through *www.regulations.gov* or email. The *www.regulations.gov* Web site is an ''anonymous access'' system, which means the EPA will not know your identity or contact information unless you provide it in the body of your comment. If you send an email comment directly to the EPA without going through *www.regulations.gov* your email address will be automatically captured and included as part of the comment that is placed in the public docket and made available on the Internet. If you submit an electronic comment, the EPA recommends that you include your name and other contact information in the body of your comment and with any disk or CD–ROM you submit. If the EPA cannot read your comment due to technical difficulties and cannot contact you for clarification, the EPA may not be able to consider your comment. Electronic files should avoid the use of special characters, any form of encryption, and be free of any defects or viruses.

Docket: All documents in the electronic docket are listed in the *www.regulations.gov* index. Although listed in the index, some information is not publicly available, i.e., CBI or other information the disclosure of which is restricted by statute. Certain other material, such as copyrighted material, is not placed on the Internet and will be publicly available only in hard copy form. Publicly available docket materials are available either electronically in *www.regulations.gov* or in hard copy during normal business hours at the Office of Air, Waste and Toxics, EPA Region 10, 1200 Sixth Avenue, Seattle, WA 98101.

FOR FURTHER INFORMATION CONTACT: Kristin Hall at (206) 553–6357, *hall.kristin@epa.gov*, or by using the above EPA, Region 10 address.

SUPPLEMENTARY INFORMATION: Throughout this document wherever ''we'', ''us'' or ''our'' are used, it is intended to refer to the EPA.

Table of Contents

I. This Action
II. Background
A. PM_{10} NAAQS
B. Planning Background
III. Public and Stakeholder Involvement in Rulemaking Process
IV. Requirements for Redesignation
A. CAA Requirements for Redesignation of Nonattainment Areas
B. The LMP Option for PM_{10} Nonattainment Areas
C. Conformity Under the LMP Option
V. Review of the State's Submittal Addressing the Requirements for Redesignation and LMPs
A. Has the Sandpoint NAA attained the applicable NAAQS?
B. Does the Sandpoint NAA have a fully approved SIP under Section 110(k) of the CAA?
C. Has the State met all applicable requirements under Section 110 and Part D of the CAA?
D. Has the State demonstrated that the air quality improvement is due to permanent and enforceable reductions?
E. Does the area have a fully approved maintenance plan pursuant to Section 175A of the CAA?
F. Has the State demonstrated that the Sandpoint NAA qualifies for the LMP option?
G. Does the State have an approved attainment emissions inventory which can be used to demonstrate attainment of the NAAQS?
H. Does the LMP include an assurance of continued operation of an appropriate EPA-approved air quality monitoring network, in accordance with 40 CFR Part 58?
I. Does the plan meet the clean air act requirements for contingency provisions?
J. Has the State met conformity requirements?
VI. Revisions to Sandpoint PM_{10} SIP
VII. Proposed Action
VIII. Statutory and Executive Order Reviews

I. This Action

The EPA is proposing to approve in part and disapprove in part the LMP submitted by the State of Idaho on December 14, 2011, for the Sandpoint NAA, and to approve the State's request to redesignate this area to attainment for the PM_{10} NAAQS. The Sandpoint NAA LMP submittal included a request to approve revisions to the control measures included in the PM_{10} attainment State Implementation Plan (SIP) for the Sandpoint NAA. The EPA is proposing to approve the revised Sandpoint City Ordinance 965 for control of residential burning because it strengthens the SIP. The EPA is also proposing to approve the State's request to remove the Louisiana-Pacific Corporation—Sandpoint operating permit control measure from the SIP because the facility has been shut down, dismantled, and is no longer in operation. However, the EPA is proposing to disapprove the State's request to remove the operating permits for two other sources because these

sources are still in operation and the State did not provide a demonstration that removal of the two permits would not interfere with attainment or maintenance of the NAAQS. In addition, the removal of controls that were relied on to demonstrate attainment would disqualify the Sandpoint NAA for LMP eligibility and require that the State submit a full maintenance plan. Because the State submitted the Sandpoint NAA LMP intending to qualify for the LMP option, and did not submit a full maintenance plan, we are proposing to disapprove the separable portion of the submittal that is not consistent with the LMP qualifying criteria. This proposed partial disapproval does not prevent the State from submitting a subsequent SIP revision demonstrating that the removal of the two operating permits does not interfere with attainment or maintenance of the NAAQS.

The EPA's proposed partial disapproval would be simultaneously corrected because we are, in this same action, proposing to fully approve the Sandpoint NAA LMP with all control measures in place. Therefore, upon final action a fully approved LMP would be in place and no further submittal would be required from the State to address the partial disapproval.

II. Background

A. PM_{10} NAAQS

''Particulate matter,'' also known as particle pollution or PM, is a complex mixture of extremely small particles and liquid droplets. The size of particles is directly linked to their potential for causing health problems. The EPA is concerned about particles that are 10 micrometers in diameter or smaller because those are the particles that generally pass through the throat and nose and enter the lungs. Once inhaled, these particles can affect the heart and lungs and cause serious health effects. People with heart or lung diseases, children and older adults are the most likely to be affected by particle pollution exposure. However, even healthy individuals may experience temporary symptoms from exposure to elevated levels of particle pollution.

On July 1, 1987, the EPA promulgated a NAAQS for PM_{10} (52 FR 24634). The EPA established a 24-hour standard of 150 $\mu g/m^3$ and an annual standard of 50 $\mu g/m^3$, expressed as an annual arithmetic mean. The EPA also promulgated secondary PM_{10} standards identical to the primary standards. In a rulemaking action dated October 17, 2006, the EPA retained the 24-hour PM_{10} standard but revoked the annual PM_{10} standard (71 FR 61144, effective December 18, 2006).

B. Planning Background

On August 7, 1987, the EPA designated the Sandpoint area as a PM_{10} nonattainment area due to measured violations of the 24-hour PM_{10} standard (52 FR 29383). The notice announcing the designation upon enactment of the 1990 CAA Amendments was published on March 15, 1991 (56 FR 11101). On November 6, 1991, the Sandpoint NAA was classified as moderate under sections 107(d)(4)(B) and 188(a) of the CAA (56 FR 56694).

The Sandpoint NAA is located in northern Idaho and includes the communities of Sandpoint, Kootenai, and Ponderay, covering approximately fifteen square miles of Bonner County. The Sandpoint NAA is a low-lying area, at 2085 feet above sea level, surrounded by mountain ranges with varying heights of approximately 3000 to 7000 feet. The Sandpoint NAA is located approximately 46 miles north of Coeur d'Alene, Idaho, and 70 miles northeast of Spokane, Washington.

After the Sandpoint NAA was designated nonattainment for PM_{10}, the Idaho Department of Environmental Quality (DEQ) worked with the communities of Sandpoint, Kootenai, and Ponderay to develop a plan to bring the area into attainment no later than December 31, 1996. The State submitted the plan to the EPA on August 16, 1996, as a moderate PM_{10} SIP under section 189(a) of the CAA. The moderate PM_{10} SIP included a comprehensive residential wood combustion program, controls on fugitive road dust, and emission limitations on industrial sources. The EPA took final action to approve the Sandpoint moderate PM_{10} SIP on June 26, 2002 (67 FR 43006). On June 22, 2010, the EPA determined that the Sandpoint NAA had attained the PM_{10} NAAQS (75 FR 35302).

On December 14, 2011, the State submitted to the EPA the Sandpoint NAA LMP for approval, and requested that the EPA redesignate the Sandpoint NAA to attainment for the PM_{10} NAAQS. The State also requested approval to revise control measures in the Sandpoint PM_{10} SIP. In this action, the EPA is proposing to approve in part and disapprove in part the Sandpoint NAA LMP, and to concurrently redesignate the Sandpoint area from nonattainment to attainment for the PM_{10} NAAQS.

III. Public and Stakeholder Involvement in Rulemaking Process

Section 110(a)(2) of the CAA requires that each SIP revision be adopted after reasonable notice and public hearing. This must occur prior to the revision being submitted by a state to the EPA. The State of Idaho provided notice and an opportunity for public comment on the Sandpoint NAA LMP from October 11, 2011 to November 10, 2011. A notice of public hearing was published in the *Coeur d'Alene Press* and the *Bonner County Daily Bee* on October 11, 2011. The State held a public hearing on December 9, 2011, in Sandpoint, Idaho. This SIP revision was submitted by the Governor's designee to the EPA on December 14, 2011. The EPA has evaluated the State's submittal and determined that the State met the requirements for reasonable notice and public hearing under section 110(a)(2) of the CAA.

IV. Requirements for Redesignation

A. CAA Requirements for Redesignation of Nonattainment Area

A nonattainment area may be redesignated to attainment after the area has measured air quality data showing the NAAQS has been attained, and when certain planning requirements are met. Section 107(d)(3)(E) of the CAA, and the General Preamble to Title I provide the criteria for redesignation (57 FR 13498, April 16, 1992). These criteria are further clarified in a policy and guidance memorandum from John Calcagni, Director, Air Quality Management Division, EPA Office of Air Quality Planning and Standards dated September 4, 1992, entitled ''Procedures for Processing Requests to Redesignate Areas to Attainment'' (Calcagni Memo). The criteria for redesignation are:

1. The Administrator has determined that the area has attained the applicable NAAQS;
2. the Administrator has fully approved the applicable SIP for the area under section 110(k) of the CAA;
3. the state containing the area has met all requirements applicable to the area under section 110 and part D of the CAA;
4. the Administrator has determined that the improvement in air quality is due to permanent and enforceable reductions in emissions; and
5. the Administrator has fully approved a maintenance plan for the area as meeting the requirements of section 175A of the CAA.

B. The LMP Option for PM_{10} Nonattainment Areas

On August 9, 2001, the EPA issued guidance on streamlined maintenance plan provisions for certain moderate PM_{10} nonattainment areas seeking redesignation to attainment (Memo from

Lydia Wegman, Director, Air Quality Standards and Strategies Division, entitled ''Limited Maintenance Plan Option for Moderate PM_{10} Nonattainment Areas'' (LMP Option Memo). The LMP Option Memo contains a statistical demonstration that areas meeting certain air quality criteria will, with a high degree of probability, maintain the standard ten years into the future. Thus, the EPA provided the maintenance demonstration for areas meeting the criteria outlined in the LMP Option Memo. It follows that future year emission inventories for these areas, and some of the standard analyses to determine transportation conformity with the SIP, are no longer necessary.

To qualify for the LMP Option, the area should have attained the PM_{10} NAAQS and, based upon the most recent five years of air quality data at all monitors in the area, the 24-hour design value should be at or below 98 μg/m³. If an area cannot meet this test, it may still be able to qualify for the LMP Option if the average design value (ADV) for the area is less than the site-specific critical design value (CDV). In addition, the area should expect only limited growth in on-road motor vehicle PM_{10} emissions (including fugitive dust) and should have passed a motor vehicle regional emissions analysis test. The LMP Option Memo also identifies core provisions that must be included in the LMP. These provisions include an attainment year emissions inventory, assurance of continued operation of an EPA-approved air quality monitoring network, and contingency provisions.

C. Conformity Under the LMP Option

The transportation conformity rule and the general conformity rule (40 CFR parts 51 and 93) apply to nonattainment areas and maintenance areas covered by an approved maintenance plan. Under either conformity rule, an acceptable method of demonstrating a Federal action conforms to the applicable SIP is to demonstrate that expected emissions from the planned action are consistent with the emissions budget for the area.

While qualification for the LMP Option does not exempt an area from the need to affirm conformity, conformity may be demonstrated without submitting an emissions budget. Under the LMP Option, emissions budgets are treated as essentially not constraining for the length of the maintenance period because it is unreasonable to expect that the qualifying areas would experience so much growth in that period that a violation of the PM_{10} NAAQS would result. For transportation conformity purposes, the EPA would conclude that emissions in these areas need not be capped for the maintenance period and therefore a regional emissions analysis would not be required. Similarly, Federal actions subject to the general conformity rule could be considered to satisfy the ''budget test'' specified in 40 CFR 93.158 (a)(5)(i)(A) for the same reasons that the budgets are essentially considered to be unlimited.

V. Review of the State's Submittal Addressing the Requirements for Redesignation and LMPs

A. Has the Sandpoint NAA attained the applicable NAAQS?

To demonstrate that an area has attained the PM_{10} NAAQS, states must submit an analysis of ambient air quality data from an ambient air monitoring network representing peak PM_{10} concentrations. The data should be quality-assured and stored in the EPA Air Quality System database. The EPA has reviewed air quality data for the area and has confirmed that the Sandpoint NAA attained the PM_{10} NAAQS [1] by the applicable attainment date of December 31, 1996 and continues to attain the PM_{10} NAAQS. The EPA's analysis is described below.

The 24-hour PM_{10} NAAQS is 150 μg/m³. An area has attained this 24-hour standard if the average number of expected exceedances per year is less than or equal to one, when averaged over a three-year period (40 CFR 50.6). To make this determination, three consecutive years of complete ambient air quality data must be collected in accordance with Federal requirements (40 CFR part 58 including appendices).

On June 22, 2010, the EPA determined that the Sandpoint NAA attained the PM_{10} NAAQS by December 31, 1996 (75 FR 35302). The EPA has also reviewed more recent ambient air quality data for the 24-hour PM_{10} NAAQS, and has determined that the Sandpoint NAA continues to attain the 24-hour PM_{10} NAAQS. A summary of the EPA's data review and analysis can be found in the docket for this action (Sandpoint PM_{10} NAAQS LMP Memo, dated September 13, 2012).

A comprehensive air quality monitoring plan, intended to meet the requirements of 40 CFR part 58 was submitted by the State to the EPA on January 15, 1980, and approved by the EPA on July 28, 1982 (40 CFR 52.670). Updated monitoring plans have been subsequently submitted and approved, with the most recent submittal dated July 1, 2012 and approved on October 25, 2012. The monitoring plan describes the PM_{10} monitoring network throughout Idaho, which includes the Sandpoint monitoring site. In the Sandpoint NAA LMP submittal, the State states that the Idaho DEQ has monitored PM_{10} in Sandpoint since 1985, and that data from 1996 through 2008 show that PM_{10} concentrations remain well below the 24-hour PM_{10} NAAQS. In addition, the State states that the Sandpoint monitoring site is operated in compliance with the EPA monitoring guidelines set forth in 40 CFR part 58, Ambient Air Quality Surveillance. Data from the Sandpoint monitoring site has been quality assured by Idaho DEQ and submitted to the EPA Air Quality System (AQS), accessible through the EPA AirData Web site at *http://www.epa.gov/airdata/*.

B. Does the Sandpoint NAA have a fully approved SIP under Section 110(k) of the CAA?

To qualify for redesignation, the SIP for the area must be fully approved under section 110(k) of the CAA, and must satisfy all requirements that apply to the area. As discussed in Section II.B. above, the State submitted the Sandpoint PM_{10} SIP to the EPA on August 16, 1996. The EPA fully approved the Sandpoint PM_{10} SIP on June 26, 2002, as satisfying all requirements that apply to the area (67 FR 43006). Thus, the area has a fully approved nonattainment area SIP under section 110(k) of the CAA.

C. Has the State met all applicable requirements under Section 110 and Part D of the CAA?

Section 107(d)(3)(E) of the CAA requires that for an area to be redesignated to attainment the state must meet all applicable requirements under section 110 and Part D of the CAA. The EPA interprets this to mean that the state must meet all requirements that applied to the area prior to, and at the time of, the submission of a complete redesignation request. The following is a summary of how the State meets these requirements.

(1) CAA Section 110 Requirements

Section 110(a)(2) of the CAA contains general requirements for nonattainment plans. These requirements include, but are not limited to: submittal of a SIP adopted by the state after reasonable notice and public hearing; provisions for establishment and operation of appropriate apparatus, methods, systems and procedures necessary to monitor ambient air quality; implementation of a permit program;

[1] Because the annual PM_{10} standard was revoked effective December 18, 2006, see 71 FR 61144 (October 17, 2006), this notice discusses only attainment of the 24-hour PM_{10} standard.''

provisions for Part C—Prevention of Significant Deterioration (PSD) and Part D—New Source Review (NSR) permit programs; criteria for stationary source emission control measures, monitoring and reporting; provisions for modeling; and provisions for public and local agency participation. See the General Preamble for further explanation of these requirements (57 FR 13498, April 16, 1992). For purposes of redesignating the Sandpoint NAA, the EPA has reviewed the Idaho SIP and finds that the State has satisfied all applicable requirements under CAA section 110(a)(2) for the PM_{10} NAAQS. The EPA's approval of the State's SIP for attainment and maintenance of the PM_{10} NAAQS under CAA section 110 can be found at 40 CFR 52.673.

(2) Part D Requirements

CAA part D contains general requirements applicable to all areas designated nonattainment. The general requirements are followed by a series of subparts specific to each pollutant. All PM_{10} nonattainment areas must meet the general provisions of Subpart 1 and the specific PM_{10} provisions in Subpart 4, ''Additional Provisions for Particulate Matter Nonattainment Areas.'' The following paragraphs discuss these requirements as they apply to the Sandpoint NAA.

(2)(a) Part D, Section 172(c)(2)—Reasonable Further Progress

CAA section 172(c) contains general requirements for nonattainment area plans. A thorough discussion of these requirements can be found in the General Preamble (57 FR 13538, April 16, 1992). CAA section 172(c)(2) requires nonattainment plans to provide for reasonable further progress (RFP). Section 171(1) of the CAA defines RFP as ''such annual incremental reductions in emissions of the relevant air pollutant as are required by this part (part D of title I) or may reasonably be required by the Administrator for the purpose of ensuring attainment of the applicable national ambient air quality standard by the applicable date.'' The requirements for RFP, identification of certain emissions increases and other measures needed for attainment were satisfied with the approved Sandpoint moderate PM_{10} SIP (67 FR 43006). On June 22, 2010, the EPA determined that the Sandpoint NAA attained the PM_{10} NAAQS by December 31, 1996 (75 FR 35302), therefore the State has demonstrated that no further showing of RFP or quantitative milestones is necessary.

(2)(b) Part D, Section 172(c)(3)—Emissions Inventory

Section 172(c)(3) of the CAA requires a comprehensive, accurate, current inventory of actual emissions from all sources in the Sandpoint NAA. The State included an emissions inventory dated March 31, 2006 in the Sandpoint NAA LMP submittal. The State used 1999 as a base year for the emissions inventory because the State determined that it is representative of emissions during the five year period (1996–2001) associated with air quality data demonstrating attainment, and that a more current inventory would not find higher total emissions rates that those estimated for 1999. The State has demonstrated that the 1999 base year emissions inventory is current, accurate, and comprehensive, and therefore meets the requirements of section 172(c)(3) of the CAA.

(2)(c) Part D, Section 172(c)(5)—New Source Review (NSR)

The CAA requires all nonattainment areas to meet several requirements regarding NSR. A state must have an approved major NSR program that meets the requirements of CAA section 172(c)(5). The Part D NSR rules for PM_{10} nonattainment areas in Idaho were approved by the EPA on July 23, 1993 (58 FR 39445) and amended on January 16, 2003 (68 FR 2217). Revisions to Idaho's NSR rules were most recently approved by the EPA on November 26, 2010 (75 FR 72719). Within the boundaries of the Sandpoint NAA, the requirements of the Part D NSR program will be replaced by the State's Prevention of Significant Deterioration (PSD) program requirements upon the effective date of redesignation.

(2)(d) Part D, Section 172(c)(7)—Compliance With CAA Section 110(a)(2): Air Quality Monitoring Requirements

Once an area is redesignated, the state must continue to operate an appropriate air monitoring network in accordance with 40 CFR part 58 to verify the attainment status of the area. On January 15, 1980, the State submitted a comprehensive air quality monitoring plan, intended to meet the requirements of 40 CFR part 58. The EPA approved the plan on July 28, 1982 (40 CFR 52.760). This monitoring plan has been updated, with the most recent submittal dated July 1, 2012 and approved on October 25, 2012. The monitoring plan describes the PM_{10} monitoring network throughout Idaho, including the Sandpoint monitoring site. The Sandpoint monitoring site is operated in compliance with the EPA monitoring guidelines set forth in 40 CFR part 58, Ambient Air Quality Surveillance. In addition, the Sandpoint NAA LMP submittal provides a commitment to continue operation of the PM_{10} monitoring network in accordance with 40 CFR part 58, and to annually verify continued attainment of the 24-hour PM_{10} NAAQS in Sandpoint.

(2)(e) Part D, Section 172(c)(9)—Contingency Measures

The CAA requires that contingency measures take effect if an area fails to meet RFP requirements or fails to attain the NAAQS by the applicable attainment date. On June 22, 2010, the EPA determined that the Sandpoint NAA attained the PM_{10} NAAQS by the applicable attainment date of December 31, 1996 (75 FR 35302), therefore contingency measures are no longer required under Section 172 (c)(9) of the CAA. However, contingency provisions are required for maintenance plans under Section 175(a)(d). Please see section IV.I. for a description of Idaho's maintenance plan contingency provisions.

(2)(f) Part D, Section 189(a), (c) and (e)—Additional Provisions for Particulate Matter Nonattainment Areas

CAA sections 189(a), (c) and (e) apply to moderate PM_{10} nonattainment areas. Any of these requirements which were applicable and due prior to the submission of the redesignation request must be fully approved into the SIP before redesignating the area to attainment. With respect to the Sandpoint NAA, these requirements include:

(a) Provisions to assure that reasonably available control measures were implemented by December 10, 1993 (section 189(a)(1)(C));

(b) either a demonstration that the plan provided for attainment as expeditiously as practicable but not later than December 31, 1994, or a demonstration that attainment by that date was impracticable (section 189(a)(1)(B));

(c) quantitative milestones which were achieved every three years and which demonstrate RFP toward attainment by December 31, 1994 (section 189(c)(1)); and

(d) provisions to assure that the control requirements applicable to major stationary sources of PM_{10} also apply to major stationary sources of PM_{10} precursors except where the Administrator determined that such sources do not contribute significantly to PM_{10} levels which exceed the NAAQS in the area (section 189(e)).

Provisions for reasonably available control measures, attainment demonstration, and RFP milestones were fully approved into the SIP upon the EPA approval of the Sandpoint PM_{10} SIP for the Sandpoint NAA on June 26, 2002 (67 FR 43006). The EPA approved changes to Idaho's major NSR rules on July 17, 2012 (77 FR 41916) and November 26, 2010 (75 FR 72719). Idaho's major nonattainment NSR rules and PSD rules include control requirements that apply to major stationary sources of PM_{10} and PM_{10} precursors in nonattainment and attainment/unclassifiable areas.

D. Has the State demonstrated that the air quality improvement is due to permanent and enforceable reductions?

Section 107(d)(3)(E)(iii) of the CAA provides that a nonattainment area may not be redesignated unless the EPA determines that the improvement in air quality is due to permanent and enforceable reductions in emissions resulting from implementation of the SIP. Therefore, a state must be able to reasonably attribute the improvement in air quality to permanent and enforceable emission reductions by demonstrating that air quality improvements are the result of actual enforceable emission reductions. This showing should consider emission rates, production capacities, and other related information. The analysis should assume that sources are operating at permitted levels (or historic peak levels) unless evidence is presented that such an assumption is unrealistic.

Permanent and enforceable control measures in the Sandpoint PM_{10} SIP include controls on residential wood combustion, fugitive road dust, and industrial sources of emissions. The Sandpoint NAA LMP submittal describes the efforts started in 1995 to control residential wood combustion in the City of Sandpoint, which included a public awareness campaign, an uncertified woodstove replacement program, and a new city ordinance related to woodstoves and burning. The public awareness program provided citizens with information about stove sizing, installation, proper operation and maintenance, general health risks of wood smoke, new stove technology, and alternatives to wood heating. The replacement program resulted in the removal of 84 uncertified wood stoves which were replaced by natural gas units, certified wood stoves, and pellet stoves. In addition, the Sandpoint NAA LMP submittal describes Sandpoint Ordinance 965, which restricts the sale and installation of uncertified solid fuel heating appliances, and implements a wood burning curtailment program in the City of Sandpoint.

The Sandpoint NAA LMP submittal also describes measures to reduce particulate matter emissions due to winter sanding of road surfaces in the City of Sandpoint including changing the type and volume of sanding material used, using alternative materials, and increasing the frequency of street sweeping. Sandpoint City Ordinance 939, adopted in 1994, requires applicators of anti-skid material to use only material that meets certain standards for percentages of fines and durability. In addition, the Sandpoint Independent Highway District and Idaho Transportation Department have acquired equipment to apply liquid de-icer and have also designated certain roads in Sandpoint as an ''anti-skid free zone.''

Finally, the Sandpoint NAA LMP submittal describes the control measures relied on to address industrial source emissions. The State developed emissions limits for facilities in the Sandpoint NAA through the Tier II Operating Permit Program, with input from each facility to ensure the reductions in potential to emit were feasible and offered sufficient operational flexibility. Portions of the Tier II operating permits for three sources, Louisiana Pacific Corporation—Sandpoint, Lake Pre-Mix, and Interstate Concrete and Asphalt were approved into the Sandpoint PM_{10} SIP on June 26, 2002 (67 FR 43006).

The controls on residential wood combustion, fugitive road dust, and industrial sources of emissions described above were approved by the EPA into the Sandpoint PM_{10} SIP, and are both permanent and Federally-enforceable (67 FR 43006). However, Idaho's Sandpoint NAA LMP submittal included a request to remove the three Tier II operating permits from the Sandpoint PM_{10} SIP. The EPA is proposing to approve the State's request to remove the Louisiana-Pacific Corporation—Sandpoint operating permit from the SIP because the facility has ceased operations and has been dismantled. The EPA is proposing to disapprove the State's request to remove the two other operating permits (Lake Pre-Mix, and Interstate Concrete and Asphalt) because the submittal did not include a demonstration that removal of the two permits would not interfere with attainment or maintenance of the PM_{10} NAAQS. This proposed partial disapproval does not prevent the State from submitting a subsequent SIP revision to remove the two Tier II operating permits with the required demonstration.

The EPA has concluded that areas that qualify for the LMP Option will meet the NAAQS, even under worst case meteorological conditions. Therefore, under the LMP Option, the maintenance demonstration is presumed to be satisfied if an area meets the criteria to qualify for a LMP. An application of the LMP qualifying criteria to the Sandpoint NAA is provided below. By qualifying for a LMP, the State presumptively demonstrates that the air quality improvements in the Sandpoint NAA are the result of permanent emission reductions and not a result of either economic trends or meteorology.

E. Does the area have a fully approved maintenance plan pursuant to Section 175A of the Act?

In this action, we are proposing to approve the LMP in accordance with the principles outlined in the LMP Option Memo. Upon final approval, the Sandpoint NAA will have a fully approved maintenance plan.

F. Has the State demonstrated that the Sandpoint NAA qualifies for the LMP option?

The LMP Option Memo outlines the requirements for an area to qualify for a LMP. First, the area should be attaining the NAAQS. On June 22, 2010, the EPA determined that the Sandpoint NAA attained the PM_{10} NAAQS by December 31, 1996 (75 FR 35302). The EPA has reviewed more recent ambient air quality data for the 24-hour PM_{10} NAAQS, and has determined that the Sandpoint NAA continues to attain the 24-hour PM_{10} NAAQS. Please see section V.A. for a detailed discussion.

Second, the average design value (ADV) for the past five years of monitoring data must be at or below the critical design value (CDV). The CDV is a margin of safety value at which an area has been determined to have a one in ten probability of exceeding the NAAQS. The LMP Option Memo provides two methods to review monitoring data for the purpose of determining qualification for a LMP. The first method is a comparison of a site's ADV with the CDV of 98 $\mu g/m^3$ for the 24-hour PM_{10} NAAQS. A second method that applies to the 24-hour PM_{10} NAAQS is the calculation of a site-specific CDV and a comparison of the site-specific CDV with the ADV for the past five years of monitoring data. The State's LMP submittal provides a comparison of five-year ADVs compared to the 24-hour and annual CDVs for the years 2004–2008, as described in the first method for review of monitoring data to determine qualification for a

LMP. The State's analysis demonstrates that the Sandpoint NAA has met the LMP design value criteria since 1999, the base year for the most recent emissions inventory. The EPA has reviewed the calculations and concurs with the State's findings. The EPA also calculated ADVs using more recent data and found that the Sandpoint NAA meets the LMP design value criteria for the period 2007–2011. The EPA's design value calculations and analysis can be found in the docket for this action (Sandpoint PM_{10} NAAQS LMP Memo, dated September 13, 2012). Therefore, the EPA finds that the Sandpoint NAA meets the design value criteria outlined in the LMP Option Memo.

Third, the area must meet the motor vehicle regional emissions analysis test described in attachment B of the LMP Option Memo. Using the methodology outlined in the LMP Option Memo, the State has submitted an analysis of whether increased emissions from on-road mobile sources would increase PM_{10} concentrations in the Sandpoint NAA to levels that would threaten the assumption of maintenance that underlies the LMP policy. Based on monitoring data for the period 2004–2008, the State has determined that the Sandpoint NAA passes the motor vehicle regional emissions analysis test. The EPA has reviewed the calculations in the State's Sandpoint NAA LMP submittal and concurs with this conclusion.

The LMP Option Memo requires all controls relied on to demonstrate attainment remain in place for a NAA to qualify for a LMP. The controls on residential wood combustion, fugitive road dust, and industrial sources of emissions described above were approved by the EPA into the Sandpoint PM_{10} SIP, and are both permanent and Federally-enforceable (67 FR 43006). However, Idaho's Sandpoint NAA LMP submittal included a request to remove the three Tier II operating permits from the Sandpoint PM_{10} SIP. The EPA is proposing to approve the State's request to remove the Louisiana-Pacific Corporation—Sandpoint operating permit from the SIP because the facility has ceased operations and has been dismantled. The EPA is proposing to disapprove the State's request to remove the two other operating permits (Lake Pre-Mix, and Interstate Concrete and Asphalt) because the submittal did not include a demonstration that removal of the two permits would not interfere with attainment or maintenance of the PM_{10} NAAQS. This proposed partial disapproval does not prevent the State from submitting a subsequent SIP revision to remove the two Tier II operating permits with the required demonstration. Because the industrial source controls relied upon to demonstrate attainment remain in place for those sources that have not been permanently shut down, the State still meets the qualification criteria under the LMP Option Memo.

As described above, the Sandpoint NAA meets the qualification criteria set forth in the LMP Option Memo, and therefore qualifies for a LMP. The LMP Option Memo also indicates that once a State submits a LMP and it is in effect, the State will be expected to determine, on an annual basis, that the LMP criteria are still being met. If the State determines that the LMP criteria are not being met, it should take action to reduce PM_{10} concentrations enough to requalify for the LMP. One possible approach the State could take is to implement contingency measures. Section V. I. provides a description of contingency provisions submitted as part of the Sandpoint NAA LMP submittal. In the Sandpoint NAA LMP submittal, the State commits to evaluate, on an annual basis, the LMP criteria for the Sandpoint NAA.

As a result of the above analysis, the EPA is proposing to approve the LMP for the Sandpoint NAA and the State's request to redesignate the Sandpoint NAA to attainment for the PM_{10} NAAQS.

G. Does the State have an approved attainment emissions inventory which can be used to demonstrate attainment of the NAAQS?

Pursuant to the LMP Option Memo, the state's approved attainment plan should include an emissions inventory which can be used to demonstrate attainment of the NAAQS. The inventory should represent emissions during the same five-year period associated with air quality data used to determine whether the area meets the applicability requirements of the LMP Option. The state should review its inventory every three years to ensure emissions growth is incorporated in the inventory if necessary.

The State's Sandpoint NAA LMP submittal includes an emissions inventory completed in 2006, with a base year of 1999. The State determined that using 1999 as a base year in the inventory would be representative of the first five years of clean data (i.e., having no violations of the PM_{10} NAAQS). The Sandpoint NAA LMP submittal states that since 1999, the only major stationary source in the Sandpoint NAA has ceased operation and has been dismantled. The submittal also provides ambient monitoring data to analyze population growth as it relates to particulate matter concentrations. Based on this data, the State has concluded that population growth is not interfering with improvements in particulate matter ambient air quality. The State concludes that the 1999 emissions inventory is representative of emissions during the five year period (1996–2001) associated with air quality data demonstrating attainment, and that a more current inventory would not find higher total emissions rates than those estimated for 1999. The Sandpoint NAA LMP submittal meets the EPA guidance, as described above, for purposes of an attainment emissions inventory.

H. Does the LMP include an assurance of continued operation of an appropriate EPA-Approved air quality monitoring network, in accordance with 40 CFR Part 58?

PM_{10} monitoring was established in the Sandpoint area in 1985. The monitoring network was developed and has been maintained in accordance with Federal siting and design criteria in 40 CFR part 58, and in consultation with EPA Region 10. The EPA most recently approved the State's air monitoring plan on October 25, 2012. In the Sandpoint NAA LMP submittal, the State states that it will continue to operate its monitoring network to meet the EPA requirements at 40 CFR part 58.

I. Does the plan meet the clean air act requirements for contingency provisions?

CAA section 175A states that a maintenance plan must include contingency provisions, as necessary, to ensure prompt correction of any violation of the NAAQS which may occur after redesignation of the area to attainment. As explained in the LMP Option Memo and the Calcagni Memo, these contingency provisions are considered to be an enforceable part of the Federally-approved SIP. The maintenance plan should clearly identify the provisions to be adopted, a schedule and procedures for adoption and implementation, and a specific time limit for action by the state. The maintenance plan should identify the events that would ''trigger'' the adoption and implementation of a contingency provision, the contingency provision that would be adopted and implemented, and the schedule indicating the time frame by which the state would adopt and implement the provision. The LMP Option Memo and Calcagni Memo state that the EPA will determine the adequacy of a contingency plan on a case-by-case basis. At a minimum, it must require

that the State will implement all measures contained in the CAA part D nonattainment plan for the area prior to redesignation.

In the Sandpoint NAA LMP submittal, the State has included maintenance plan contingency provisions to ensure the area continues to meet the PM_{10} NAAQS. The primary contingency provision is the Episodic Curtailment Program in Sandpoint City Ordinance 965 which restricts and controls burning activities to reduce particulate matter emissions. Ordinance 965 has been strengthened by the City of Sandpoint to protect both the PM_{10} NAAQS and the $PM_{2.5}$ NAAQS. The ordinance specifies ''triggers'' for implementing provisions, based on forecasted PM_{10} and $PM_{2.5}$ levels. The Sandpoint NAA LMP also references Idaho regulations previously approved into the SIP which provide the State with broad authority to require or revise a permit of any stationary source, at any time, should it be determined that emission rate reductions are necessary to attain or maintain the PM_{10} NAAQS.

The contingency provisions submitted by the State have been adopted, are currently being implemented in the Sandpoint area, and contain triggers based on forecasted PM_{10} levels for implementing specific provisions to reduce particulate matter emissions from home wood heating. Therefore, the EPA believes the contingency provisions submitted in the Sandpoint NAA LMP are adequate to meet CAA section 175A requirements.

J. Has the State met conformity requirements?

(1) Transportation Conformity

Under the LMP Option, emissions budgets are treated as essentially not constraining for the maintenance period because it is unreasonable to expect that qualifying areas would experience so much growth in that period that a NAAQS violation would result. While areas with maintenance plans approved under the LMP Option are not subject to the budget test, the areas remain subject to the other transportation conformity requirements of 40 CFR part 93, subpart A. Thus, the metropolitan planning organization (MPO) in the area or the state must document and ensure that:

(a) Transportation plans and projects provide for timely implementation of SIP transportation control measures (TCMs) in accordance with 40 CFR 93.113;

(b) transportation plans and projects comply with the fiscal constraint element as set forth in 40 CFR 93.108;

(c) the MPO's interagency consultation procedures meet the applicable requirements of 40 CFR 93.105;

(d) conformity of transportation plans is determined no less frequently than every three years, and conformity of plan amendments and transportation projects is demonstrated in accordance with the timing requirements specified in 40 CFR 93.104;

(e) the latest planning assumptions and emissions model are used as set forth in 40 CFR 93.110 and 40 CFR 93.111;

(f) projects do not cause or contribute to any new localized carbon monoxide or particulate matter violations, in accordance with procedures specified in 40 CFR 93.123; and

(g) project sponsors and/or operators provide written commitments as specified in 40 CFR 93.125.

Upon approval of the Sandpoint NAA LMP, the Sandpoint area is exempt from performing a regional emissions analysis, but must meet project-level conformity analyses as well as the transportation conformity criteria mentioned above.

(2) General Conformity

For Federal actions required to address the specific requirements of the general conformity rule, one set of requirements applies particularly to ensuring that emissions from the action will not cause or contribute to new violations of the NAAQS, exacerbate current violations, or delay timely attainment. One way that this requirement can be met is to demonstrate that ''the total of direct and indirect emissions from the action (or portion thereof) is determined and documented by the State agency primarily responsible for the applicable SIP to result in a level of emissions which, together with all other emissions in the nonattainment area, would not exceed the emissions budgets specified in the applicable SIP'' (40 CFR 93.158(a)(5)(i)(A)).

The decision about whether to include specific allocations of allowable emissions increases to sources is one made by the state air quality agencies. These emissions budgets are different than those used in transportation conformity. Emissions budgets in transportation conformity are required to limit and restrain emissions. Emissions budgets in general conformity allow increases in emissions up to specified levels. The State has not chosen to include specific emissions allocations for Federal projects that would be subject to the provisions of general conformity.

VI. Revisions to Sandpoint PM_{10} SIP

In the Sandpoint NAA LMP submittal, the State requested that the EPA approve revisions to the Sandpoint PM_{10} SIP. The State requested approval of revisions to the Sandpoint City Ordinance 965 which regulates residential wood burning to protect both the PM_{10} and $PM_{2.5}$ NAAQS. The revision aligns the ordinance with the EPA Air Quality Index public advisory levels, establishes triggers for burn curtailment based on forecasted levels of PM_{10} and $PM_{2.5}$, adopts Federal standards of performance for new residential wood heaters, and includes a violation and penalty provision. The EPA is proposing to approve the revised Sandpoint City Ordinance 965 into the Sandpoint PM_{10} SIP because it strengthens the SIP.

In addition, the State requested that the EPA remove three Tier II operating permits (Louisiana-Pacific Corporation—Sandpoint, Lake Pre-Mix, and Interstate Concrete and Asphalt) from the Sandpoint PM_{10} SIP, originally approved on June 26, 2002 (67 FR 43006). The Sandpoint NAA LMP submittal asserts that the State did not submit these operating permits as part of the attainment demonstration and that the EPA, without a request from the State, approved portions of the permits into the SIP.

As a result of the State's request, the EPA reviewed the administrative record of the Sandpoint PM_{10} SIP approval action. The State's Sandpoint PM_{10} SIP submittal included an attainment demonstration that relied on industrial source emission reductions (See 67 FR 43006, June 26, 2002). As noted in the EPA's June 26, 2002, approval, the State chose to establish the necessary PM_{10} industrial source controls through the State's Tier II Operating Permit Program. The administrative record for the Sandpoint PM_{10} SIP included a letter from the Idaho DEQ to the EPA indicating which portions of the operating permits for the specific sources were appropriate to approve into the Sandpoint PM_{10} SIP (IDEQ Letter PM_{10} Industrial Source Controls, May 16, 2002). The EPA approved portions of the three operating permits containing the source controls into the Sandpoint PM_{10} SIP to meet the CAA requirement that emission reductions be both permanent and Federally-enforceable (40 CFR 52.670(c)). A footnote to 40 CFR 52.670(c) explains that ''EPA does not have the authority to remove these source-specific requirements in the absence of a demonstration that their removal would not interfere with attainment or

maintenance of the NAAQS, violate any prevention of significant deterioration increment or result in visibility impairment.'' The footnote further explains that the ''Idaho Department of Environmental Quality may request removal by submitting such a demonstration to EPA as a SIP revision.''

At this time, the EPA is proposing to approve the State's request to remove the source operating permit for Louisiana-Pacific Corporation—Sandpoint because the facility has ceased operations and has been dismantled. Removing the permit for the permanently shut down facility from the SIP will not interfere with attainment or maintenance of the PM_{10} NAAQS. The facility report from the EPA's Enforcement and Compliance History Online Web site is provided in the docket for this action (Louisiana-Pacific Corporation –Sandpoint Facility Report). The EPA is proposing to disapprove the State's request to remove the two operating permits for Lake Pre-Mix and Interstate Concrete and Asphalt from the Sandpoint PM_{10} SIP because the submittal did not include a demonstration that the removal of the permits would not interfere with attainment or maintenance of the NAAQS, and because removal of the permits would disqualify the State from the LMP option and require the submittal of a full maintenance plan. As previously noted, the EPA's partial disapproval does not prevent the State from providing the demonstration required to remove the two permits from the SIP in the future.

The EPA's proposed partial disapproval will be simultaneously corrected because we are, in this same action, proposing to fully approve the Sandpoint NAA LMP with all control measures in place. Therefore, upon final action a fully approved LMP will be in place and no further submittal will be required from the State to address the partial disapproval.

VII. Proposed Action

The EPA is proposing to approve in part and disapprove in part the Sandpoint NAA LMP submitted by the State and to approve the State's request to redesignate this area to attainment for the PM_{10} NAAQS. The State's Sandpoint NAA LMP submittal included a request to approve revisions to the control measures included in the PM_{10} attainment SIP for the Sandpoint NAA. The EPA is proposing to approve the revised Sandpoint City Ordinance 965 for control of residential burning because it strengthens the SIP. The EPA is also proposing to approve the State's request to remove the Louisiana-Pacific Corporation—Sandpoint operating permit control measure from the SIP because the facility has ceased operations and has been dismantled. However, the EPA is proposing to disapprove the State's request to remove the operating permits for two other sources because these sources are still in operation and the State did not provide a demonstration that removal of the two permits would not interfere with attainment or maintenance of the NAAQS. In addition, the removal of controls that were relied on to demonstrate attainment would disqualify the Sandpoint NAA for LMP eligibility and require that the State submit a full maintenance plan. Because the State submitted the Sandpoint NAA LMP intending to qualify for the LMP option, and did not submit a full maintenance plan, we are proposing to disapprove the separable portion of the submittal that is not consistent with the LMP qualifying criteria. This proposed partial disapproval does not prevent the State from submitting a request for approval of a SIP revision demonstrating that the removal of the two operating permits does not interfere with attainment or maintenance of the NAAQS.

The EPA's proposed partial disapproval would be simultaneously corrected because we are, in this same action, proposing to fully approve the Sandpoint NAA LMP with all control measures in place. Therefore, upon final action a fully approved LMP would be in place and no further submittal would be required from the State to address the partial disapproval.

VIII. Statutory and Executive Order Reviews

Under the Clean Air Act, the Administrator is required to approve a SIP submission that complies with the provisions of the Act and applicable Federal regulations. 42 U.S.C. 7410(k); 40 CFR 52.02(a). Thus, in reviewing SIP submissions, the EPA's role is to approve state choices, provided that they meet the criteria of the Clean Air Act. Accordingly, this action merely approves state law as meeting Federal requirements and does not impose additional requirements beyond those imposed by state law. For that reason, this action:

- Is not a ''significant regulatory action'' subject to review by the Office of Management and Budget under Executive Order 12866 (58 FR 51735, October 4, 1993);
- Does not impose an information collection burden under the provisions of the Paperwork Reduction Act (44 U.S.C. 3501 *et seq.*);
- Is certified as not having a significant economic impact on a substantial number of small entities under the Regulatory Flexibility Act (5 U.S.C. 601 *et seq.*);
- Does not contain any unfunded mandate or significantly or uniquely affect small governments, as described in the Unfunded Mandates Reform Act of 1995 (Pub. L. 104–4);
- Does not have Federalism implications as specified in Executive Order 13132 (64 FR 43255, August 10, 1999);
- Is not an economically significant regulatory action based on health or safety risks subject to Executive Order 13045 (62 FR 19885, April 23, 1997);
- Is not a significant regulatory action subject to Executive Order 13211 (66 FR 28355, May 22, 2001);
- Is not subject to the requirements of Section 12(d) of the National Technology Transfer and Advancement Act of 1995 (15 U.S.C. 272 note) because application of those requirements would be inconsistent with the Clean Air Act; and
- Does not provide the EPA with the discretionary authority to address, as appropriate, disproportionate human health or environmental effects, using practicable and legally permissible methods, under Executive Order 12898 (59 FR 7629, February 16, 1994).

In addition, this rule does not have tribal implications as specified by Executive Order 13175 (65 FR 67249, November 9, 2000), because the SIP is not approved to apply in Indian country located in the state, and the EPA notes that it will not impose substantial direct costs on tribal governments or preempt tribal law.

List of Subjects

40 CFR Part 52

Environmental protection, Air pollution control, Particulate matter, and Reporting and recordkeeping requirements.

40 CFR Part 81

Environmental protection, Air pollution control, National parks, Wilderness areas.

Authority: 42 U.S.C. 7401 *et seq.*

Dated: January 22, 2013.

Dennis J. McLerran,

Regional Administrator, Region 10.

[FR Doc. 2013–02233 Filed 1–31–13; 8:45 am]

BILLING CODE 6560–50–P

DEPARTMENT OF HEALTH AND HUMAN SERVICES

45 CFR Parts 155 and 156

[CMS–9958–P]

RIN 0938–AR68

Patient Protection and Affordable Care Act; Exchange Functions: Eligibility for Exemptions; Miscellaneous Minimum Essential Coverage Provisions

AGENCY: Centers for Medicare & Medicaid Services (CMS), HHS.

ACTION: Proposed rule.

SUMMARY: This proposed rule would implement certain functions of the Affordable Insurance Exchanges (''Exchanges''), consistent with title I of the Patient Protection and Affordable Care Act of 2010, as amended by the Health Care and Education Reconciliation Act of 2010, referred to collectively as the Affordable Care Act. These specific statutory functions include determining eligibility for and granting certificates of exemption from the shared responsibility payment for not maintaining minimum essential coverage as described in section 5000A of the Internal Revenue Code. Additionally, this proposed rule implements the responsibility of the Secretary of Health and Human Services, in coordination with the Secretary of the Treasury, to designate other health benefits coverage as minimum essential coverage by providing that certain coverage be designated as minimum essential coverage. It also outlines substantive and procedural requirements that other types of individual coverage must fulfill in order to be certified as minimum essential coverage under the Internal Revenue Code.

DATES: To be assured consideration, comments must be received at one of the addresses provided below, no later than 5 p.m. on March 18, 2013.

ADDRESSES: In commenting, please refer to file code CMS–9958–P. Because of staff and resource limitations, we cannot accept comments by facsimile (FAX) transmission.

You may submit comments in one of four ways (please choose only one of the ways listed):

1. *Electronically.* You may submit electronic comments on this regulation to *http://www.regulations.gov*. Follow the ''Submit a comment'' instructions.

2. *By regular mail.* You may mail written comments to the following address ONLY: Centers for Medicare & Medicaid Services, Department of Health and Human Services, Attention: CMS–9958–P, P.O. Box 8010, Baltimore, MD 21244–8010.

Please allow sufficient time for mailed comments to be received before the close of the comment period.

3. *By express or overnight mail.* You may send written comments to the following address only: Centers for Medicare & Medicaid Services, Department of Health and Human Services, Attention: CMS–9958–P, Mail Stop C4–26–05, 7500 Security Boulevard, Baltimore, MD 21244–1850.

4. *By hand or courier.* Alternatively, you may deliver (by hand or courier) your written comments only to the following addresses prior to the close of the comment period:

a. For delivery in Washington, DC—Centers for Medicare & Medicaid Services, Department of Health and Human Services, Room 445–G, Hubert H. Humphrey Building, 200 Independence Avenue SW., Washington, DC 20201

(Because access to the interior of the Hubert H. Humphrey Building is not readily available to persons without Federal government identification, commenters are encouraged to leave their comments in the CMS drop slots located in the main lobby of the building. A stamp-in clock is available for persons wishing to retain a proof of filing by stamping in and retaining an extra copy of the comments being filed.)

b. For delivery in Baltimore, MD—Centers for Medicare & Medicaid Services, Department of Health and Human Services, 7500 Security Boulevard, Baltimore, MD 21244–1850.

If you intend to deliver your comments to the Baltimore address, call telephone number (410) 786–7195 in advance to schedule your arrival with one of our staff members.

Comments erroneously mailed to the addresses indicated as appropriate for hand or courier delivery may be delayed and received after the comment period.

For information on viewing public comments, see the beginning of the **SUPPLEMENTARY INFORMATION** section.

FOR FURTHER INFORMATION CONTACT: Lauren Block, (301) 492–4425, for provisions related to exemptions from the shared responsibility payment.

Amanda Ledford, (410) 786–1565, for provisions related to minimum essential coverage.

SUPPLEMENTARY INFORMATION:

Inspection of Public Comments: All comments received before the close of the comment period are available for viewing by the public, including any personally identifiable or confidential business information that is included in a comment. We post all comments received before the close of the comment period on the following Web site as soon as possible after they have been received: *http://www.regulations.gov*. Follow the search instructions on that Web site to view public comments.

Comments received timely will also be available for public inspection as they are received, generally beginning approximately 3 weeks after publication of a document, at the headquarters of the Centers for Medicare & Medicaid Services, 7500 Security Boulevard, Baltimore, Maryland 21244, Monday through Friday of each week from 8:30 a.m. to 4 p.m. To schedule an appointment to view public comments, phone 1–800–743–3951.

Executive Summary

To ensure effective and efficient implementation of the insurance market reforms, the Affordable Care Act requires a nonexempt individual to maintain minimum essential coverage or make a shared responsibility payment. The Affordable Care Act specifies the categories of individuals who are eligible to receive exemptions from the shared responsibility payment under section 5000A of the Code, which provides nonexempt individuals with a choice: Maintain minimum essential coverage for themselves and any nonexempt family members or include an additional payment with their federal income tax return. Many individuals are exempt from the shared responsibility payment, including some whose religious beliefs conflict with acceptance of the benefits of private or public insurance and those who do not have an affordable health insurance coverage option available. Section 1311(d)(4)(H) of the Affordable Care Act (42 U.S.C. 18031(d)(4)(H)) directs the new health insurance marketplaces, called Affordable Insurance Exchanges (Exchanges), to issue certifications of exemption from the shared responsibility payment under section 5000A of the Code to eligible individuals. Section 1411 of the Affordable Care Act (42 U.S.C. 18081) generally provides procedures for determining an individual's eligibility for various benefits relating to health coverage, including exemptions from the application of section 5000A of the Code.

This proposed rule sets forth standards and processes under which the Exchange will conduct eligibility determinations for and grant certificates of exemption from the shared responsibility payment. Furthermore, it supports and complements rulemaking conducted by the Secretary of the

Treasury with respect to section 5000A of the Internal Revenue Code (the Code), as added by section 1501(b) of the Affordable Care Act, published elsewhere in this issue of the **Federal Register**. The intent of this rule is to implement the relevant provisions while continuing to afford states substantial discretion in the design and operation of an Exchange, with greater standardizations provided where directed by the statute or where there are compelling practical, efficiency, or consumer protection reasons.

Under section 5000A(f)(1)(E), the Secretary of Health and Human Services, in coordination with the Secretary of the Treasury, may designate other health benefits coverage as minimum essential coverage. This proposed rule provides standards for determining whether certain other types of health insurance coverage constitute minimum essential coverage and procedures for sponsors to follow for a plan to be identified as minimum essential coverage under section 5000A. This rule proposes to designate certain types of existing health coverage as minimum essential coverage. Other types of coverage, not statutorily specified and not designated as minimum essential coverage in this regulation, may be recognized as minimum essential coverage if certain substantive and procedural requirements are met as proposed in this rule. These additional categories of minimum essential coverage, both those designated per se and those that may apply for recognition are neither group health insurance coverage nor individual health insurance. Consumers with types of coverage that are recognized as minimum essential coverage in accordance with this rule would be determined to have minimum essential coverage for purposes of the minimum essential coverage requirement if the coverage is certified to be substantially compliant with the requirements of Title I of the Affordable Care Act that apply to non-grandfathered plans in the individual market.

Table of Contents

Executive Summary
I. Background
A. Legislative Overview
B. Stakeholder Consultation and Input
C. Structure of the Proposed Rule
D. Alignment With Related Rules and Published Information
II. Provisions of the Proposed Regulation
A. Part 155—Exchange Establishment Standards and Other Related Standards Under the Affordable Care Act
1. Subpart A—General Provisions
a. Definitions (§ 155.20)
2. Subpart C—General Functions of an Exchange
a. Functions of an Exchange (§ 155.200)
3. Subpart G—Exchange Functions in the Individual Market: Eligibility Determinations for Exemptions
a. Definitions and General Requirements (§ 155.600)
b. Eligibility Standards for Exemptions (§ 155.605)
c. Eligibility Process for Exemptions (§ 155.610)
d. Verification Process Related to Eligibility for Exemptions (§ 155.615)
e. Eligibility Redeterminations for Exemptions During a Calendar Year (§ 155.620)
f. Options for Conducting Eligibility Determinations for Exemptions (§ 155.625)
g. Reporting (§ 155.630)
h. Right to Appeal (§ 155.635)
B. Part 156—Health Insurance Issuer Standards Under the Affordable Care Act, Including Standards Related to Exchanges
a. Definition of Minimum Essential Coverage (§ 156.600)
b. Other Types of Coverage That Qualify as Minimum Essential Coverage (§ 156.602)
c. Requirements for Recognition as Minimum Essential Coverage for Coverage Not Otherwise Designated Minimum Essential Coverage in the Statute or This Regulation (§ 156.604)
d. HHS Audit Authority (§ 156.606)
e. Eligibility for Minimum Essential Coverage
III. Collection of Information Requirements
IV. Response to Comments
V. Summary of Regulatory Impact Statement
VI. Regulatory Flexibility Act
VII. Unfunded Mandates
VIII. Federalism
IX. Congressional Review Act
X. Regulation Text

Abbreviations

Affordable Care Act—the Affordable Care Act of 2010 (which is the collective term for the Patient Protection and Affordable Care Act (Pub. L. 111–148) and the Health Care and Education Reconciliation Act (Pub. L. 111–152))
BHP Basic Health Program
CHIP Children's Health Insurance Program
CMS Centers for Medicare & Medicaid Services
FPL Federal Poverty Level
HHS Department of Health and Human Services
IRS Internal Revenue Service
NAIC National Association of Insurance Commissioners
QHP Qualified Health Plan
SSA Social Security Administration
SSN Social Security Number
The Code Internal Revenue Code of 1986, as amended

I. Background

A. Legislative Overview

Section 1501(b) of the Affordable Care Act added section 5000A of the Internal Revenue Code (the Code) to a new chapter 48 of subtitle D (Miscellaneous Excise Taxes) of the Code effective for months beginning after December 31, 2013. Section 5000A of the Code, which was subsequently amended by the TRICARE Affirmation Act of 2010, Public Law 111–159 (124 Stat. 1123) and Public Law 111–173 (124 Stat. 1215), requires that nonexempt individuals either maintain minimum essential coverage or make a shared responsibility payment, includes standards for the calculation of the shared responsibility payment, describes categories of individuals who may qualify for an exemption from the shared responsibility payment, and provides the definition of ''minimum essential coverage.''

Section 1311(d)(4)(H) of the Affordable Care Act specifies that the Exchange will, subject to section 1411 of the Affordable Care Act, grant certifications of exemption from the shared responsibility payment specified in section 5000A of the Code. Section 1311(d)(4)(I)(i) of the Affordable Care Act specifies that the Exchange will transfer to the Secretary of the Treasury a list of the individuals to whom the Exchange provided such a certification. Section 1411(a)(4) of the Affordable Care Act provides that the Secretary of Health and Human Services (the Secretary) will establish a program for determining whether a certification of exemption from the shared responsibility requirement and penalty will be issued by an Exchange under section 1311(d)(4)(H) of the Affordable Care Act. We propose to interpret this provision as authorizing the Secretary to determine ''whether,'' with respect to the nine exemptions provided for under section 5000A of the Code, Exchanges would perform the role of issuing certifications of exemption under section 1311(d)(4)(H) of the Affordable Care Act, whether eligibility for the exemption would be determined solely through tax filing, or whether both processes would be available. Under this interpretation, the responsibility under section 1311(d)(4)(H) of the Affordable Care Act to issue certifications of exemption would be ''subject to'' these determinations by the Secretary under section 1411(a)(4) of the Affordable Care Act, and Exchanges would thus only be required to issue certifications of exemption with respect to exemptions not exclusively assigned to IRS.

Section 1321 of the Affordable Care Act discusses state flexibility in the operation and enforcement of Exchanges and related requirements. Section 1321(a) of the Affordable Care Act provides broad authority for the

Secretary to establish standards and regulations to implement the statutory requirements related to Exchanges and other components of title I of the Affordable Care Act as amended by the Health Care and Education Reconciliation Act of 2010. Section 1311(k) of the Affordable Care Act specifies that Exchanges may not establish rules that conflict with or prevent the application of regulations promulgated by the Secretary under Subtitle D of Title I of the Affordable Care Act.

In accordance with our interpretation of these sections of the Affordable Care Act, and the authority provided by, *inter alia,* section 1321(a) of the Affordable Care Act, we propose that under the program established under section 1411(a)(4) of the Affordable Care Act, the Exchange would determine eligibility for and grant certificates of exemption as described below. We also note that consistent with prior guidance, a state-based Exchange can be approved to operate by HHS if it uses a federally-managed service to make eligibility determinations for exemptions.

On March 27, 2012 the Department of Health and Human Services (HHS) published the final rule entitled ''Patient Protection and Affordable Care Act; Establishment of Exchanges and Qualified Health Plans; Exchange Standards for Employers'' (77 FR 18309). The provisions of the final rule, herein referred to as the Exchange final rule, encompass the key functions of Exchanges related to eligibility, enrollment, and plan participation and management. In the Exchange final rule, 45 CFR 155.200(b) provided that a minimum function of an Exchange is to grant certificates of exemption consistent with sections 1311(d)(4)(H) and 1411 of the Affordable Care Act. This proposed rule cross-references several provisions in the Exchange final rule, notably the limited situations where eligibility and verification processes used in determining eligibility for enrollment in a qualified health plan (QHP) through the Exchange and for insurance affordability programs can also be used by Exchanges for the purpose of determining whether an individual is eligible for an exemption from the shared responsibility payment.

Section 5000A(f) of the Code designates certain types of coverage as minimum essential coverage. The term ''minimum essential coverage'' includes all of the following: Government sponsored programs (the Medicare program under part A of title XVII of the Social Security Act (the Act); the Medicaid program under title XIX of the Social Security Act; the CHIP program under title XXI of the Act; medical coverage under chapter 55 of title 10, United States Code, including the TRICARE program; a health care program under chapter 17 or 18 of title 38, United States Code, as determined by the Secretary of Veterans Affairs, in coordination with the Secretaries of Health and Human Services and Treasury; a health plan under section 2504(e) of title 22, United States Code (relating to Peace Corps volunteers); or the Nonappropriated Fund Health Benefits Program of the Department of Defense, established under section 349 of the National Defense Authorization Act for Fiscal Year 1995); coverage under an eligible employer-sponsored plan; coverage under a health plan offered in the individual market within a State; and coverage under a grandfathered health plan. In addition, section 5000A(f)(1)(E) of the Code directs the Secretary of Health and Human Services, in coordination with the Secretary of Treasury, to designate other health benefits coverage, such as a state health benefits risk pool, as minimum essential coverage for purposes of their enrollees satisfying the minimum coverage requirement. This proposed regulation would designate certain additional types of coverage qualify as minimum essential coverage and also proposes a process by which other types of coverage could be recognized as minimum essential coverage.

B. Stakeholder Consultation and Input

On August 3, 2010, HHS published a request for comment (the RFC) inviting the public to provide input regarding the rules that will govern the Exchanges. In particular, HHS asked states, tribal representatives, consumer advocates, employers, insurers, and other interested stakeholders to comment on the standards Exchanges should meet. The comment period closed on October 4, 2010.

The public response to the RFC yielded comment submissions from consumer advocacy organizations, medical and health care professional trade associations and societies, medical and health care professional entities, health insurers, insurance trade associations, members of the general public, and employer organizations. The majority of the comments were related to the general functions and standards for Exchanges, qualified health plans (QHPs), eligibility and enrollment, and coordination with Medicaid. While this proposed rule does not directly respond to comments from the RFC, the comments received are described, where applicable, in discussing specific regulatory proposals. We intend to respond to relevant comments from the RFC, along with comments received on this proposed rule, as part of the final rule.

In addition to the RFC, HHS has consulted with stakeholders through regular meetings with the National Association of Insurance Commissioners (NAIC), regular contact with states through the Exchange grant process, and meetings with tribal representatives, health insurance issuers, trade groups, consumer advocates, employers, and other interested parties. For example, we received feedback from health care sharing ministries about the process for how individual members can obtain certificates of exemption based on their membership in a health care sharing ministry, and an expression of interest in a process for allowing health care sharing ministries to obtain recognition that they meet the standards under section 5000A(d)(2)(B) of the Code. We also received information from various stakeholder groups regarding types of ''other coverage'' as described in section 5000A(f)(1)(E) of the Code. Similar consultation will continue throughout the development of further Exchange guidance on exemptions and ''other coverage.''

C. Structure of the Proposed Rule

The provisions of this proposed rule include the addition of subpart G to 45 CFR part 155, which includes standards for Exchanges related to conducting eligibility determinations for and granting certificates of exemption from the shared responsibility payment. We also propose to amend § 155.200(a) to add a reference to indicate that, consistent with existing language in § 155.200(b), granting certificates of exemption is a minimum function of the Exchange. Furthermore, we add subpart G to 45 CFR part 156 which includes standards related to minimum essential coverage.

D. Alignment With Related Rules and Published Information

As noted above, this proposed rule is published in coordination with the Department of Treasury's proposed rule, ''Shared Responsibility Payment for Not Maintaining Minimum Essential Coverage'' (Treasury proposed rule). This regulation includes numerous cross-references to the Treasury proposed rule, published elsewhere in this issue of the **Federal Register**.

II. Provisions of the Proposed Regulation

A. Part 155—Exchange Establishment Standards and Other Related Standards Under the Affordable Care Act

1. Subpart A—General Provisions

a. Definitions (§ 155.20)

We propose to make a technical correction to the definition of ''applicant'' to note that it does not apply to an applicant seeking an exemption pursuant to proposed subpart G. We propose a separate definition for ''applicant'' that is specific to exemptions in § 155.600.

We propose to make a technical correction to the definition of ''application filer'' to note that it does not apply to an application filer seeking an exemption pursuant to proposed subpart G. We propose a separate definition for ''application filer'' that is specific to exemptions in § 155.600.

2. Subpart C—General Functions of an Exchange

a. Functions of an Exchange (§ 155.200)

The Exchange final rule specifies that the Exchange will perform the minimum functions described in subparts D, E, H, and K of part 155. In accordance with section 1311(d)(4)(H) of the Affordable Care Act and existing 45 CFR 155.200(b), in paragraph (a), we propose to add that the Exchange would also perform the functions described in subpart G of this part related to eligibility determinations for exemptions.

3. Subpart G—Exchange Functions in the Individual Market: Eligibility Determinations for Exemptions

a. Definitions and General Requirements (§ 155.600)

In paragraph (a) of § 155.600, we propose definitions for terms that apply throughout subpart G. First, we propose to define ''applicant'' as an individual who is seeking an exemption from the shared responsibility payment for him or herself through an application submitted to the Exchange. We provide this definition to distinguish the use of applicant in this subpart from the definition in § 155.20 of this chapter, which is specific to an individual who is submitting an application for an eligibility determination for enrollment in a QHP.

We propose to define ''application filer'' as an applicant, an individual who expects to be liable for the shared responsibility payment, in accordance with 26 CFR 1.5000A–1(c) of the Treasury proposed rule, published elsewhere in this issue of the **Federal Register**, for an applicant, an authorized representative, or if the applicant is a minor or incapacitated, someone acting responsibly for an applicant. This is consistent with the definition that is used for the eligibility process for enrollment in a QHP and for insurance affordability programs, with one exception. In this proposed rule, we use the liability structure established in 26 CFR 1.5000A–1(c) of the Treasury proposed rule, published elsewhere in this issue of the **Federal Register** to assist in defining the range of potential application filers, while the definition of application filer in § 155.20 uses the tax household or Medicaid household, as they are the relevant units for eligibility for enrollment in a QHP and for insurance affordability programs. We note that we expect to modify the proposed language in § 155.227 (78 FR 4711) to incorporate the minor changes necessary to clarify that authorized representatives can assist individuals seeking exemptions. Similarly, we intend to modify the proposed language in § 155.225 (78 FR 4710) to clarify that certified application counselors can assist individuals seeking exemptions. We seek comment on how authorized representatives and certified application counselors can best support individuals seeking certificates of exemption from the Exchange.

We propose to define ''exemption'' as an exemption from the shared responsibility payment. While sections 5000A(d)(2) through (4) of the Code describe individuals who are not ''applicable individuals'' for purposes of the requirement to maintain minimum essential coverage in section 5000A of the Code, and sections 5000A(e)(1) through (5) of the Code describe individuals who are exempt from liability for the shared responsibility payment imposed under section 5000A(b) of the Code, the consequence for individuals described in either category is the same: Individuals in both categories are not subject to the shared responsibility payment for not maintaining minimum essential coverage.

We propose to define ''health care sharing ministry'' in the same manner as provided in 26 CFR 1.5000A–3(b) of the Treasury proposed rule, published elsewhere in this issue of the **Federal Register**.

We propose to define ''required contribution'' in the same manner as provided in 26 CFR 1.5000A–3(e) of the Treasury proposed rule, published elsewhere in this issue of the **Federal Register**.

We propose to define ''Indian tribe'' in the same manner as in 26 CFR 1.5000A–3(g) of the Treasury proposed rule, published elsewhere in this issue of the **Federal Register**, which in turn references the definition in section 45A(c)(6) of the Code. We note that section 45A(c)(6) of the Code describes certain federally-recognized Indian tribes (including any qualified Alaska Native village or regional or village corporation).

We welcome comment on these definitions.

Consistent with 45 CFR 155.300(c), in paragraph (b), we propose that for purposes of this subpart, any attestation that an applicant is to provide under this subpart may also be provided by an application filer on behalf of the applicant.

In paragraph (c) of § 155.600, we propose that for the purposes of this subpart, the Exchange must consider information through electronic data sources, other information as provided by the applicant, or other information as available in the records of the Exchange to be reasonably compatible with an applicant's attestation if the difference or discrepancy does not impact the eligibility for the relevant exemption that the applicant requested. This is the same standard that is used in 45 CFR 155.300(d) for eligibility for enrollment in a QHP and for insurance affordability programs. This proposal minimizes the administrative burden on applicants by limiting additional requests for information to only those situations in which there is good cause for such requests. We note that as provided in subpart D, this threshold does not preclude flexibility for Exchanges in further defining reasonable compatibility, particularly with regard to specific categories of exemptions, as long as the Exchange adheres to this general standard as well.

We also propose to add paragraphs (d) and (e) in order to specify that the accessibility and notice requirements in § 155.205(c) and § 155.230, respectively, apply to exemptions as well, given that the definition of applicant in this subpart is otherwise specific to exemptions. We note that 45 CFR 155.230(d), as proposed (78 FR 4594), specifies that notices will be provided either through standard mail, or, if an individual elects, electronically, provided that standards for use of electronic notices are met as set forth in 42 CFR 435.918, as proposed in the same issue of the **Federal Register**. Further discussion of this approach is at 78 FR 4601–4602 and 4635.

b. Eligibility standards for Exemptions (§ 155.605)

Section 5000A of the Code provides nine categories of exemptions. Of these nine categories, section 5000A expressly provides that certifications of exemptions in two categories (religious conscience and hardship) be provided by the Exchange under section 1311(d)(4)(H) of the Affordable Care Act. Under the program established under section 1411(a)(4) of the Affordable Care Act for determining whether certifications of exemptions are to be issued by Exchanges under section 1311(d)(4)(H) of the Affordable Care Act, we are proposing that Exchanges would issue certificates of exemption in these two categories. With respect to the other seven exemptions, for reasons set forth below, we propose that under the program provided for in section 1411(a)(4) of the Affordable Care Act, Exchanges would issue certifications of exemption with respect to three additional categories of exemption (with exemptions also available through the tax filing process). In the four remaining exemption categories, however, we propose that under the program established under section 1411(a)(4) of the Affordable Care Act, certifications would not be issued by Exchanges under section 1311(d)(4)(H) of the Affordable Care Act, and the determination of whether an individual is eligible for an exemption under section 5000A of the Code in these categories would be made exclusively by IRS through the tax filing process.

In this section, we propose standards related to the five categories of exemptions that we are proposing that the program under section 1411(a)(4) of the Affordable Care Act assign to Exchanges, and discuss our reasons for assigning the remaining four categories of exemptions exclusively to the IRS at the end of this section.

In paragraph (a) of § 155.605, we propose that except as specified in paragraph (g), the Exchange would determine an applicant eligible for and grant a certificate of exemption for a month if the Exchange determines that he or she meets the requirements for one of the categories of exemptions described in this section for at least one day in the month, consistent with 26 CFR 1.5000A–3 of the Treasury proposed rule, published elsewhere in this issue of the **Federal Register**. We note that an individual will not need to submit a separate application for each month in which he or she is applying for an exemption. We also note that the proposed standards for hardship exemptions specify that depending on the circumstances for each specific hardship exemption category, the certificate may be provided for an entire calendar year or instead for a specific month or period of months, including periods of time that stretch across more than one calendar year (for example, in the case of a hardship that occurs for the first time in December); this is discussed further in the preamble associated with paragraph (g) of this section.

We note that an individual may be eligible for multiple exemptions simultaneously; while there is no practical reason to have multiple exemptions in effect at any given time, we believe that an applicant should be able to apply for multiple exemptions in case some are denied, and also receive any exemptions for which he or she is eligible. We considered specifying that the Exchange could only accept an application for one category of exemption at a time from an applicant, but did not propose this approach because we believe that it increases the length of time required to conclude the overall eligibility process in cases where the initial application is denied. Further, we considered specifying that once the Exchange granted a certificate of exemption based on one category, it would not provide additional exemptions for the same time period. However, we believe that the statute does not provide the flexibility for the Exchange to deny an exemption to an applicant who is otherwise eligible, and think that the number of applicants who will continue to pursue exemptions after receiving one for a coverage month is too small to increase administrative burden in any significant way. We solicit comments regarding this approach.

In paragraph (b), we propose that except as specified, an applicant is required to submit a new application for each year for which an applicant would like to be considered for an exemption through the Exchange, and that an exemption will only be provided for a calendar year that the applicant submitted an application. This proposal is based on the recognition that for many categories of exemptions, an applicant's exemption status may change from year to year. There are exceptions for exemptions provided based on membership in an Indian tribe and for religious conscience, in recognition that an individual's qualification for these exemptions is expected to remain the same from year to year. There are also exceptions for hardship, since some categories of hardship will be provided for one or more months and may be provided for periods of time that stretch across more than one calendar year (for example, in the case of a hardship that occurs for the first time in December), and some categories of hardship can only be provided after the close of a calendar year. We welcome comments on this approach and how the Exchange can expedite and streamline the process.

We considered whether to specify that the Exchange send a notice to each individual who had an exemption certificate from the Exchange for a calendar year, in order to remind him or her regarding the opportunity to apply to for an exemption for the following calendar year, and whether this could also be an individual option. We solicit comments regarding the use of such a reminder and on a renewal process more generally.

In paragraphs (c) through (g) of this section, we propose standards for eligibility for an exemption through the Exchange. First, in paragraph (c), we propose to codify the statutory eligibility standards for the exemption based on religious conscience. In paragraph (c)(1), we propose that the Exchange will determine an applicant eligible for an exemption for a month if he or she is a member of a recognized religious sect or division described in section 1402(g)(1) of the Code, and an adherent of established tenets or teachings of such sect or division for such month, in accordance with 26 CFR 1.5000A–3(a) of the Treasury proposed rule, published elsewhere in this issue of the **Federal Register**. We note that the statute prescribes the religious sects and divisions that are covered by this exemption, and that as such, HHS does not have discretion to expand it to cover other groups.

In paragraph (c)(2), we propose eligibility standards regarding the duration of the exemption for religious conscience. In paragraph (c)(2)(i), we propose that the Exchange grant the exemption for religious conscience to an applicant that meets the standards of paragraph (c)(1) of this section for a month on a continuing basis, until such time that the applicant either reaches the age of 18, or reports that he or she no longer meets the standards provided in (c)(1) of this section. This proposal is based on our understanding that membership in the religious sects or divisions described in section 1402(g)(1) of the Code will not typically change from year to year, along with the provision in § 155.620(b), which provides that an applicant who receives a certificate of exemption from the Exchange must report changes with respect to the eligibility standards for exemptions established in this section. Further, the provision in § 155.620(a)

also provides that if an individual reports to the Exchange that they no longer meet the standards established in paragraph (c)(1) of this section, such as if the individual chooses to terminate his or her membership in a religious sect or division, the Exchange will redetermine his or her eligibility, which will result in the Exchange discontinuing the individual's exemption. We solicit comment on this approach.

We propose to add paragraph (c)(2)(ii) to specify how the Exchange should handle a situation in which an individual who has a certificate of exemption based on religious conscience that was granted prior to the individual reaching the age of 18 turns 18. We believe that a special process is necessary in this situation so that any future exemption is based on the individual's own attestation and not an attestation provided by a parent or legal guardian. Accordingly, we propose that the Exchange send such an individual a notice when he or she reaches the age of 18 that informs the individual that he or she needs to submit a new exemption application if he or she would like to maintain the certificate of exemption. If the applicant submits a new application that reflects uninterrupted membership, and it is approved, the Exchange will provide a new certificate of exemption that is retroactive and leaves no gap.

We propose to add paragraph (c)(3) to specify that the Exchange will grant an exemption in this category prospectively or retrospectively, including after the close of the calendar year, which provides flexibility for applicants and ensures that this exemption will be available as needed during the tax filing process, as it can only be provided by the Exchange.

In paragraph (d), we propose that the Exchange will determine an applicant eligible for an exemption for a month if the applicant is a member of a health care sharing ministry for such month in accordance with 26 CFR 1.5000A–3(b) of the Treasury proposed rule, published elsewhere in this issue of the **Federal Register**. This exemption is discussed further in the preamble associated with 26 CFR 1.5000A–3(b) of the Treasury proposed rule, published elsewhere in this issue of the **Federal Register**. We note that unlike the exemption for religious conscience, our understanding is that membership in a health care sharing ministry can fluctuate over time, particularly as we understand that membership is contingent on a financial contribution. Consequently, we propose that an applicant must re-apply for this exemption each calendar year. Further, for the same reason, we note that the language of this proposal specifies that the Exchange will only determine an individual eligible for an exemption in this category if he or she is a member of a health care sharing ministry at the time the application for an exemption is submitted; that is, the Exchange would not provide this exemption based on likely or probable future membership, including likely or probable membership beyond the calendar year. Lastly, consistent with these proposals, we propose to add paragraph (d)(2) to specify that the Exchange may only provide an exemption in this category retrospectively. We note that an individual may also receive this exemption retrospectively through the tax filing process. Furthermore, as proposed below in § 155.610(h), after December 31 of a given calendar year, the Exchange will not accept an application for an exemption in this category for months for such calendar year. We solicit comments on this approach.

In paragraph (e), we propose the eligibility standards for the exemption based on incarceration. We specify that the Exchange must determine an individual eligible for an exemption for a month that he or she meets the definition specified in 26 CFR 1.5000A–3(d) of the Treasury proposed rule, published elsewhere in this issue of the **Federal Register**, which covers anyone who is confined after the disposition of charges in a jail, prison, or similar penal institution or correctional facility, which we believe can be implemented identically to the standard used for eligibility for enrollment in a QHP. We note that this proposed language does not provide for this exemption to be granted in cases where future incarceration is in doubt; rather, we propose that the Exchange will only provide this exemption for months in which an individual was incarcerated. We also considered specifying that this exemption could be provided based on an expectation of continued incarceration, but ultimately decided not to provide an exemption in this case since individuals are frequently released from incarceration ahead of the initially-expected release date, at which point they would need to obtain minimum essential coverage unless they apply for and are determined eligible for a separate exemption. Further, unlike some other categories of exemptions, it seems unlikely that an applicant who is seeking an exemption based on incarceration is doing so to obtain guidance regarding a purchasing decision, which is the primary purpose of providing prospective exemptions. We solicit comments on this approach.

We propose to add paragraph (e)(2) to specify that the Exchange may only provide an exemption in this category retrospectively. We note that an individual may also receive this exemption retrospectively through the tax filing process. Furthermore, as proposed below in § 155.610(h), after December 31 of a given calendar year, the Exchange will not accept an application for an exemption in this category for months for such calendar year.

In paragraph (f), we propose eligibility standards for the exemption based on membership in an Indian tribe. In paragraph (f)(1), we propose to codify that the Exchange must determine an applicant eligible for an exemption for a month if he or she is a member of an Indian tribe for such month, in accordance with 26 CFR 1.5000A–3(g) of the Treasury proposed rule, published elsewhere in this issue of the **Federal Register**. We note that the definition of Indian used in the statute for this exemption is the same as is used for the cost-sharing and special enrollment provisions in subparts D and E, respectively.

In paragraph (f)(2), we propose eligibility standards regarding the duration of the exemption for membership in an Indian tribe, such that the Exchange must grant the exemption for membership in an Indian tribe to an applicant who meets the standards of paragraph (f)(1) of this section for a month on a continuing basis, until such time that the individual reports that he or she no longer meets the standards provided in (f)(1) of this section. This proposal is based on our understanding that an individual's membership in an Indian tribe, as defined in section 45A(c)(6) of the Code, will not typically change from year to year. As such, we seek to reduce the administrative burden on the Exchange and individuals who are members of Indian tribes. We note that the provision in § 155.620(a) also provides that if an individual reports to the Exchange that they no longer meet the standards established in paragraph (f)(1) of this section, such as if the individual chooses to terminate his or her membership in an Indian tribe, as defined in section 45A(c)(6) of the Code, the Exchange will redetermine his or her eligibility, which will result in the Exchange discontinuing the individual's exemption. We solicit comment on this approach.

We propose to add paragraph (f)(3) to specify that the Exchange will grant an exemption in this category during the

year prospectively or retrospectively. We note that an individual may also receive this exemption retrospectively through the tax filing process. This permits flexibility depending on when an application is submitted.

In paragraph (g), we propose eligibility standards for the exemption based on hardship, which is defined in section 5000A(e)(5) of the Code as applying to, ''any applicable individual who for any month is determined by the Secretary under section 1311(d)(4)(H) of the Affordable Care Act to have suffered a hardship with respect to the capability to obtain coverage under a qualified health plan.'' In developing some of these standards, we considered the standards established by the Commonwealth of Massachusetts. We note that we propose specific time standards for each category of hardship, and we solicit comments regarding whether these are appropriate, or if we should adopt a more uniform approach across the category.

First, in paragraph (g)(1) of § 155.605, we propose that the Exchange provide an exemption for hardship for a month or months in which an applicant experienced financial or domestic circumstances, including unexpected natural or human-caused events, such that he or she has a significant, unexpected increase in essential expenses; the expense of purchasing health insurance would have caused him or her to experience serious deprivation of food, shelter, clothing or other necessities; or he or she has experienced other factors similar to those described in paragraphs (g)(1)(i) and (ii) of this section that prevented him or her from obtaining minimum essential coverage. We propose broad language to include a range of personal scenarios that could negatively impact an applicant such that he or she would be eligible for this exemption, and we expect to clarify these criteria in future guidance. This proposal provides necessary flexibility for the Exchange to tailor an exemption for hardship to particular circumstances that impact an individual, but cannot adequately be predicted in advance. We expect that these circumstances will include, but not be limited to, situations in which an applicant is homeless, receives a shut-off notice from a utility company, faces a natural disaster, or experiences other unexpected natural or human-caused event causing significant damage to the applicant or his or her home. We request comment on these criteria, including on whether additional standards should be established in regulation or guidance. We note that we strive to set clearly defined standards as much as possible without preventing an applicant in need from being determined eligible for an exemption for hardship. We also solicit comments regarding whether the proposed time standard can be effectively implemented, or whether we should instead specify that a hardship under this paragraph that occurs at any point during a year should result in a hardship exemption for that entire year, as well as potentially for the entire next year, depending on when the hardship occurred.

Second, in paragraph (g)(2), we propose that the Exchange provide an exemption for hardship for a calendar year if an applicant, or another individual for whom the applicant attests will be included in the applicant's family (as defined in 26 CFR 1.5000A–1(d)(6)), is unable to afford coverage for such calendar year in accordance with 26 CFR 1.5000A–3(e) of the Treasury proposed rule, published elsewhere in this issue of the **Federal Register**, calculated using projected annual household income. We propose identical standards to those defined for the lack of affordable coverage exemption in 26 CFR 1.5000A–3(e), except that the Exchange would use projected household income to determine whether coverage is affordable under this exemption, instead of actual household income from the tax return for the year for which the exemption is requested. We note that the preamble associated with 26 CFR 1.5000A–3(e) of the Treasury proposed rule, published elsewhere in this issue of the **Federal Register** recognizes that the information necessary to determine the portion of the required contribution made through a salary reduction arrangement and excluded from gross income may not be available to the applicant or the IRS. Accordingly, Treasury has solicited comments about practicable ways to administer this requirement. We also solicit comments regarding whether the approach in paragraph (g)(5) of this section should also be applied to this hardship category.

We propose these standards as a component of hardship, rather than as a separate category of exemption, in order to ensure that an applicant can prospectively receive this exemption during a calendar year, and in doing so, obtain the information needed to make a purchasing decision and also qualify to purchase a catastrophic plan. We also clarify that we propose that this exemption is not available for a calendar year for an application that is submitted after the last date on which an applicant could enroll in a QHP through the Exchange for the calendar year for which the exemption is requested. This is because this exemption is designed to ensure that an applicant can obtain the information needed to make a purchasing decision, including for a catastrophic plan, which is not applicable after the last date on which enrollment would be possible. After this point, an individual will be able to seek an exemption on his or her tax return for the year.

We specify in paragraph (g)(3) of § 155.605 that the Exchange provide an exemption for hardship for a calendar year if an individual taxpayer who was not required to file an income tax return for such calendar year because his or her gross income was below the filing threshold, but who nevertheless filed to receive a tax benefit, claimed a dependent who was required to file a tax return, and the combined household income exceeded the applicable return filing threshold outlined in 26 CFR 1.5000A–3(f)(2) of the Treasury proposed rule, published elsewhere in this issue of the **Federal Register**.

We propose to add paragraph (g)(4) to specify that the Exchange provide an exemption for hardship for a calendar year for an individual who has been determined ineligible for Medicaid for one or more months during the benefit year solely as a result of a State not implementing section 2001(a) of the Affordable Care Act. We provide an exemption for hardship in this circumstance to address situations in which a state's decision regarding the Medicaid expansion included in the Affordable Care Act results in an individual being ineligible for Medicaid. We believe that this determination is an appropriate use of the hardship exemption given that the Affordable Care Act anticipates that Medicaid will be available to such individuals. With this situation noted, we believe that many such individuals could also receive exemptions based on the standards specified in paragraph (g)(2) of this section (the inability to afford coverage), or section 5000A(e)(2) of the Code (income below filing threshold), and so propose this paragraph to ensure that any such individuals remaining are not liable for a shared responsibility payment regardless of a state's decision with respect to the Medicaid expansion under the Affordable Care Act. We seek comment on whether this exemption should be limited to such individuals who are also not eligible for advance payments of the premium tax credit (that is, with projected annual household income below the poverty threshold).

We propose to add paragraph (g)(5) of § 155.605 to specify that the Exchange provide an exemption for hardship for a calendar year if an applicant and one or more employed members of his or her family, as defined in 26 CFR 1.5000A–1(d)(6) of the Treasury proposed rule, published elsewhere in this issue of the **Federal Register**, are each determined eligible for self-only coverage in separate eligible employer-sponsored plans that are affordable, pursuant to 26 CFR 1.5000A–3(e) for one or more months during the calendar year, but for whom the aggregate cost of employer-sponsored coverage for all the employed members of the family exceeds 8 percent of the household income for that month or those months, in accordance with 26 CFR 1.5000A–3(e). This proposal aligns with 26 CFR 1.5000A–3(e)(3)(i) and (ii), which specify that for an employed individual, the affordability of coverage under an eligible employer-sponsored plan offered through such individual's employer is determined based on the cost of self-only coverage, regardless of whether the employed individual is eligible for family coverage under another eligible employer-sponsored plan because of the individual's relationship to another employed individual in the family. Thus, this hardship category is designed to provide relief for employed members of a family who have affordable self-only coverage options available and as a result do not qualify for the lack of affordable coverage exemption under 26 CFR 1.5000A–3(e) even though the family's aggregate cost of covering all of the employed members may exceed 8 percent of household income. We note that this category only covers those individuals who are actually offered self-only coverage in an eligible employer-sponsored plan, as the lack of affordable coverage exemption in paragraph 26 CFR 1.5000A–3(e) already provides an exemption based on affordability computed using the cost of family coverage for children and others who are not offered self-only coverage in an eligible employer-sponsored plan.

Lastly, as noted above, section 5000A of the Code provides for four additional categories of exemptions that we propose, under our authority in section 1411(d)(4) of the Affordable Care Act to determine whether certificates of exemptions are issued by Exchanges under section 1311(d)(4)(H) of the Affordable Care Act, to make available solely through the tax filing process and not to be subject to certification by Exchanges. Specifically, we propose that the Exchange would not issue certifications of exemption with respect to household income below the filing threshold (other than the limited hardship exemption proposed in § 155.605(g)(3) and described above); not being lawfully present; short coverage gaps; and inability to afford coverage (other than the limited hardship exemption proposed in § 155.605(g)(2) and described above).

The exemptions for inability to afford coverage under section 5000A(e)(1) of the Code and income below the filing threshold under section 5000A(e)(2) of the Code necessitate an assessment of actual household income, which will be unavailable until after the close of the tax year and which would be provided to the individual through the tax filing process, making a process of seeking a duplicative certification from an Exchange an unnecessary administrative burden. Under the authority in section 5000A(e)(1)(A) and (e)(2) of the Code to determine the year for which income will be evaluated for purposes of these exemptions, the Secretary (in consultation with the Secretary of Treasury) has determined that the relevant year is the taxable year that includes a month for which an individual seeks one of these exemptions. Verification of an individual's household income once the year is over is a matter of tax administration and tax compliance. Accordingly, we are proposing under our authority in section 1411(d)(4) that certifications by Exchanges not be issued with respect to these two exemptions (other than the hardship exemption proposed in § 155.605(g)(2) and § 155.605(g)(3)).

With respect to the exemption based on an individual not being lawfully present under section 5000A(d)(3) of the Code, we do not believe it is appropriate to provide for a process under which an individual would be required to present himself or herself to an Exchange as not lawfully present. Consequently, we are proposing that this exemption also be implemented exclusively through the tax filing process.

Lastly, with respect to the exemption for short coverage gaps under section 5000A(e)(4) of the Code, as short coverage gaps can only be confirmed after the year has concluded, and as IRS will have authoritative information about whether an individual has coverage based on information reported by health insurance issuers under section 6055 of the Code, we propose that this exemption also be implemented exclusively through the tax filing process, as proposed at 26 CFR 1.5000A–5 of the Treasury proposed rule, published elsewhere in this issue of the **Federal Register**, in order to reduce administrative burden on individuals and the Exchange. We solicit comment on this approach and if there are alternative approaches that HHS should consider.

c. Eligibility Process for Exemptions (§ 155.610)

In § 155.610, we propose the process by which the Exchange will determine an applicant's eligibility for exemptions.

In paragraph (a), we propose to specify that the Exchange will use an application established by HHS in order to collect the information necessary to determine eligibility and grant a certificate of exemption for an applicant, unless the Exchange receives approval to use an alternative application in accordance with paragraph (b). We also clarify that in cases in which relevant information has already been collected through the eligibility process for enrollment in a QHP and for insurance affordability programs, the Exchange will use this information for the purpose of eligibility for an exemption to the maximum extent possible. This proposal promotes an efficient process that minimizes the burden on the applicant, and is parallel to the approach used for eligibility for enrollment in a QHP and for insurance affordability programs, as specified in 45 CFR 155.405. We intend to provide the HHS-developed application in the near future, and expect it will share data elements with the application defined in 45 CFR 155.405 for information that is common to the two applications.

In paragraph (b) of § 155.610, we propose that the Exchange may seek approval from HHS for an alternative application. We further specify that such alternative application must only request the minimum information necessary for the purposes identified in paragraph (a) of this section. Our intent is to simplify the application process by reducing the collection of unnecessary information. As such, we seek to preserve flexibility for Exchanges to utilize an alternative application if it efficiently assists individuals in applying for exemptions while also minimizing potential administrative burdens.

We also note that there are exemptions that share common data and verifications with the eligibility process for enrollment in a QHP and for insurance affordability programs. There are also situations in which an individual may submit the application described in 45 CFR 155.405, and ultimately need an exemption, including when he or she is determined ineligible for enrollment in a QHP based

on being incarcerated (other than incarceration pending the disposition of charges); when available coverage is unaffordable in accordance with proposed § 155.605(g)(2); and when he or she is ineligible for Medicaid based solely on a state's decision with respect to the Medicaid expansion under the Affordable Care Act. As such, in paragraph (c) of § 155.610, we propose that if an individual submits the application in 45 CFR 155.405 and then requests an exemption, the Exchange must use the information collected on the application for coverage and not duplicate any verification processes that share the standards specified in this subpart. We solicit comments on how best to coordinate these processes to ensure maximum administrative simplicity for all involved parties.

In paragraph (d) of § 155.610, we propose the Exchange must accept the application for an exemption from an application filer, and provide tools for the submission of an application. Section 1413(b)(1)(A)(ii) of the Affordable Care Act, 45 CFR 155.405(a) specifies that the single, streamlined application for enrollment in a QHP through the Exchange and insurance affordability programs via an Internet Web site, by telephone, by mail, and in person. However, the Affordable Care Act does not contain similarly specific language for the application for an exemption; consequently, we have opted to not specify particular channels here. With that said, we believe that this language would allow the Exchange to deploy any or all of the methods described in 45 CFR 155.405. We solicit comments regarding whether we should specify some or all of the channels specified in 45 CFR 155.405.

In paragraph (e) of § 155.610, we propose that the Exchange will specify that an applicant who has a social security number (SSN) will provide such number to the Exchange. This provision is particularly important in the exemption process because the Secretary of the Treasury uses the SSN to coordinate information in the tax filing process. Further, the SSN provides the Exchange with additional abilities to ensure program integrity. However, we clarify in paragraphs (e)(2) and (e)(3) that the Exchange may not require an individual who is not seeking an exemption for him or herself to provide a SSN, except that the Exchange will require an application filer to provide the SSN for a non-applicant tax filer only if the applicant attests that the tax filer has a SSN and filed a tax return for the year for which tax data would be utilized to verify household income and family size for a hardship exemption as discussed in § 155.605(g) that involves such verification. This proposal follows the approach used for eligibility for insurance affordability programs, as specified in 45 CFR 155.305(e)(6), and ensures that information collected by the Exchange is only that information which is necessary to support the eligibility process. We solicit comments on the applicability of this provision in the context of the exemption eligibility process.

In paragraph (f) of § 155.610, we propose that the Exchange will grant a certificate of exemption to any applicant determined eligible in accordance with the standards for exemptions provided in § 155.605. As specified in section 1311(d)(4)(H) of the Affordable Care Act, the responsibility of the Exchange is to ''grant a certification'', which is what will be provided to the IRS to support the tax filing process. Depending on the exemption for which an applicant receives a certificate, the certificate may cover a month, multiple months, a calendar year, or multiple calendar years, and may represent multiple exemption categories, to the extent that an individual receives multiple exemptions for a single tax year.

In paragraph (g)(1) of § 155.610, we propose that the Exchange will determine eligibility for exemptions promptly and without undue delay. This proposal uses the same timing threshold used throughout subpart D, including in 45 CFR 155.310(e)(1), with respect to eligibility determinations for enrollment in a QHP and for insurance affordability programs. We note in paragraph (g)(2) in § 155.610 that the assessment of timeliness of eligibility determinations by the Exchange is based on the period from the date of the application until the date on which the Exchange notifies the applicant of its decision. We expect that the Exchange will monitor the timeliness of eligibility determinations and strive to improve performance over time. We solicit comments regarding specific performance standards for the eligibility process described in this subpart, and whether we should define an outer bound in which an eligibility determination will be made (e.g., 45 days).

In paragraph (h), we propose to clarify that except for the exemption for religious conscience under § 155.605(c) and for hardship described in § 155.605(g), after December 31 of a given calendar year, the Exchange will not accept an application for an exemption for months for such calendar year. As described above, the other seven categories of exemptions will be available through the tax filing process, which we believe is a more appropriate and efficient avenue through which to receive exemptions after the coverage year is over. With the exception of the two exemptions that can only be granted by the Exchange, we consider the availability of exemptions from the Exchange necessary only until an individual can file an income tax return claiming an exemption for a given coverage year. We solicit comments regarding this approach, and whether there should be additional categories of exemptions for which the Exchange will grant exemptions after the close of a calendar year.

In paragraph (i) of § 155.610, we propose that the Exchange will provide timely written notice to an applicant of any eligibility determination for an exemption made in accordance with this subpart. We note that as proposed in § 155.600(e), written notice can be provided through electronic means, consistent with § 155.230(d). We further note that, for purposes of tax administration, if the Exchange determines an applicant eligible for a certificate of exemption, the notification provided will include an exemption certificate number, which we will further define in systems guidance. An individual will use this certificate number as part of the tax filing process.

In paragraph (j) of § 155.610, we propose that an individual who has been certified by an Exchange as qualifying for an exemption will retain the records that demonstrate not only receipt of the certificate of exemption but also qualification for the underlying exemption. For tax purposes, the Code provides that every taxpayer must keep records sufficient to establish all information required to be shown on any return the taxpayer must file. These records include any records and information substantiating any claim for exemption on the taxpayer's federal income tax return. We note that to the extent that the Exchange provides a certificate of exemption for which the underlying verification is based in part on the special circumstances exception proposed in § 155.615(h), an individual will retain records that demonstrate receipt of the certificate of exemption, as well as the circumstances that warranted the use of the special circumstances exception.

d. Verification Process Related to Eligibility for Exemptions (§ 155.615)

Section 1411(b)(5) of the Affordable Care Act provides that an applicant who is seeking an exemption will provide information as a part of the eligibility process, and section 1411(c)(1) of the

Affordable Care Act specifies that the Exchange will verify this information. Section 1411(d) of the Affordable Care Act provides flexibility to the Secretary to define verification processes for those data elements for which a process is not otherwise defined in section 1411 of the Affordable Care Act. In this section, we propose language regarding the verification process related to eligibility for exemptions. Similar to the verification process outlined in § 155.315 governing the verification process related to eligibility for enrollment in a qualified health plan through the Exchange, the Exchange will undertake a series of steps designed to assemble the information needed to determine an applicant's eligibility for the exemption for which he or she applied. These processes are designed not only to minimize the burden on applicants, but also to serve a valuable program integrity function in order to assure that applicants are only deemed eligible for exemptions if they meet the standards specified in § 155.605.

First, in paragraph (a) of § 155.615, we propose that unless HHS grants a request for modification under paragraph (i) of this section, the Exchange will verify or obtain information as provided in this section in order to determine that the applicant is eligible for an exemption.

In paragraph (b), we propose the verification process concerning the exemption for religious conscience. We specify that for any applicant requesting this exemption, the Exchange will verify that he or she meets the standards as outlined in § 155.605(c). First, in paragraph (b)(1) of § 155.615, we propose that except as specified in paragraph (b)(2) of this section, the Exchange will accept a form that reflects that an applicant has been approved under section 1402(g)(1) of the Code by the Internal Revenue Service (IRS). This is to accommodate those situations in which an applicant has already received approval from IRS for an exemption from Social Security and Medicare taxes, which use an identical standard to that used for the purposes of the religious conscience exemption. Second, in paragraph (b)(2), we propose that except as specified in paragraphs (b)(3) and (4) of this section, the Exchange will accept an applicant's attestation that he or she is a member of a recognized religious sect or division described in section 1402(g)(1) of the Code, and an adherent of established tenets or teachings of such sect or division. Next, the Exchange will verify that the religious sect or division to which the applicant attests membership is recognized by the Social Security Administration (SSA) as a religious sect or division under section 1402(g)(1) of the Code. We expect that this verification will involve comparing the religious sect or division to which an applicant attests membership to a list maintained by SSA that is available for this purpose.

Third, in paragraph (b)(3) of § 155.615, we propose that if the information provided by an applicant regarding his or her membership in a recognized religious sect or division is not reasonably compatible with other information provided by the individual or the records of the Exchange, the Exchange will follow the procedures specified in paragraph (g) of this section concerning situations in which the Exchange is unable to verify information. These procedures are used throughout this section and described in the preamble associated with paragraph (g) of this section.

Fourth, in paragraph (b)(4), we propose that if an applicant attests to membership in a religious sect or division that is not recognized by SSA as a religious sect or division under section 1402(g)(1) of the Code, the Exchange will determine an applicant ineligible for this exemption. Because SSA has an established process for religious sects and divisions to follow in order to become recognized, sects or divisions that are not currently recognized but are interested in pursuing such status will follow the existing SSA process. With that said, we note that our understanding is that there are few, if any, religious sects or divisions that could be approved under section 1402(g)(1) of the Code that have yet to be approved, as this provision of the Code requires that a sect or division to have been in existence at all times since December 31, 1950.

In paragraph (c) of § 155.615, we propose the verification process concerning the exemption for membership in a health care sharing ministry. We specify that for any applicant requesting this exemption, the Exchange will verify whether he or she meets the standards in § 155.605(d). First, in paragraph (c)(1) of § 155.615, we propose that except as specified in paragraphs (c)(2) and (3) of this section, the Exchange will first accept an attestation from an applicant that he or she is a member of a health care sharing ministry. Next, the Exchange will verify that the health care sharing ministry to which the applicant attests membership is known to the Exchange as a health care sharing ministry. We expect that this verification will involve comparing the health care sharing ministry to which an applicant attests membership with a list of health care sharing ministries that will be developed by HHS based on outreach to heath care sharing ministries, which HHS will then make available to Exchanges.

In paragraph (c)(2), we propose that if the information provided by an applicant regarding his or her membership in a health care sharing ministry is not reasonably compatible with other information provided by the individual or the records of the Exchange, the Exchange will follow the procedures specified in paragraph (g) of this section concerning situations in which the Exchange is unable to verify information. These procedures are used throughout this section and described in the preamble associated with paragraph (g) of this section.

In paragraph (c)(3), we propose that if an applicant attests to membership in a health care sharing ministry that is unknown to the Exchange as a health care sharing ministry according to the standards in § 155.605(d), the Exchange will then notify HHS and not determine an applicant eligible or ineligible for this exemption until HHS informs the Exchange regarding the attested health care sharing ministry's status with respect to the standards specified in 26 CFR 1.5000A–3(b) of the Treasury proposed rule, published elsewhere in this issue of the **Federal Register**. This process allows an applicant who is a member of a health care sharing ministry that meets the standards specified in § 155.605(d), but is previously unknown to the Exchange, to have the opportunity to receive this exemption. We have conducted preliminary outreach regarding health care sharing ministries that meet the requirements specified in the statute, and note that this provision of the Code normally requires a health care sharing ministry to have been in existence at all times since December 31, 1999, although a new organization can meet the criteria based on the history of its predecessor, and some existing health care sharing ministries may not currently meet all the statutory requirements, but can later perfect their status by, for example, obtaining 501(c)(3) status.

In paragraph (d), we propose the verification process concerning the exemption for incarceration. We specify that for any applicant requesting this exemption, the Exchange will verify, through the process described in 45 CFR 155.315(e), that he or she was incarcerated, which means that there is no additional burden associated with developing a process to support this verification for purposes of the incarceration exemption.

As with other verifications, we also specify in paragraph (d)(2) of § 155.615 that if the Exchange is unable to verify an applicant's incarceration status through the verification process outlined, the Exchange will follow the procedures in paragraph (g) of this section concerning situations in which the Exchange is unable to verify information.

In paragraph (e), we propose the verification process concerning the exemption for members of Indian tribes. We specify in paragraph (e)(1) that for any applicant requesting this exemption, the Exchange will verify his or her membership in an Indian tribe through the process outlined in 45 CFR 155.350(c), which means that there is no additional burden associated with developing a process to support this verification for purposes of this exemption. In paragraph (e)(2) of § 155.615, we also propose that the Exchange follow the procedures specified in paragraph (g) of this section if it is unable to verify an applicant's tribal membership.

In paragraph (f), we propose the verification process concerning exemptions for hardship. In paragraph (f)(2), we propose that for an applicant applying for a hardship exemption prospectively based on an inability to afford coverage, as described in § 155.605(g)(2), the Exchange use procedures established under subpart D of this part to verify the availability of affordable coverage through the Exchange based on projected income, and the procedures described in § 155.320(e) to verify eligibility for qualifying coverage in an eligible employer-sponsored plan. As noted in the preamble to § 155.605(g)(2), we propose that this exemption is not available for a calendar year for an application that is submitted after the last date on which an applicant could enroll in a QHP through the Exchange for the calendar year for which the exemption is requested. We anticipate providing additional guidance regarding procedures for the Exchange to verify whether an applicant has experienced other categories of hardship; we expect that these will likely include some amount of paper documentation, but solicit comments regarding appropriate verification procedures that will ensure a high degree of program integrity while minimizing administrative burden.

Paragraph (g) provides procedures for the Exchange to follow in the event the Exchange is unable to verify information necessary to make an eligibility determination for an exemption, including situations in which an applicant's attestation is not reasonably compatible with information in electronic data sources or other information in the records of the Exchange, or when electronic data is required but unavailable. These procedures mirror those provided in § 155.315(f), with modifications to preclude eligibility pending the outcome of the verification process, made in accordance with the Secretary's authority under section 1411 of the Affordable Care Act. These modifications are based on the fact that individuals need to account for exemptions when they file income tax returns after the coverage year is over, which means that delaying the granting of a certificate until information can be verified does not create significant issues for an applicant. We also note that given that the process in this paragraph may be applied to more than one piece of information and applicants can apply for more than one exemption at a time, it is possible for the process in paragraph (g) to run simultaneously for multiple pieces of information that are relevant to eligibility for a single exemption, or across multiple exemptions.

First, under paragraph (g)(1) of § 155.615, the Exchange will make a reasonable effort to identify and address the causes of the issue, including through typographical or other clerical errors, by contacting the application filer to confirm the accuracy of the information submitted by the application filer. We anticipate that when an applicant applies via an internet Web site or the telephone, this process will occur during the application session. Second, in paragraph (g)(2)(i), we propose that if the Exchange is unable to resolve the issue, the Exchange will notify the applicant of the issue. After providing this notice, in paragraph (g)(2)(ii), the Exchange will provide 30 days from the date on which the notice is sent for the applicant to present satisfactory documentary evidence via the channels available for the submission of an application, except by telephone, or otherwise resolve the issues. We note that, following the same approach in the Exchange final rule, all listed timelines refer to calendar days. In paragraph (g)(3), we propose that the Exchange may extend the period for an applicant to resolve the issue if the applicant can provide evidence that a good faith effort has been made to obtain the necessary documentation. And in paragraph (g)(4), we propose that the Exchange will not grant a certificate of exemption during this period based on the information that is the subject of the request under this paragraph. This is distinct from the approach taken for the eligibility process for enrollment in a QHP and for advance payments of the premium tax credit and cost-sharing reductions, since, while there is a strong benefit associated with providing access to health insurance pending the outcome of a verification process, there is no apparent health benefit to an applicant in receiving an exemption pending the outcome of such a process.

In paragraph (g)(5), we propose that, if after the conclusion of the period described in paragraph (g)(2)(ii) of this section, the Exchange is unable to verify the applicant's attestation, the Exchange will determine the applicant's eligibility based on the information available from the data sources specified in this subpart, as applicable, unless such applicant qualifies for the exception provided under paragraph (h), and notify the applicant in accordance with the procedures described under § 155.610(i), including the inability to verify the applicant's attestation.

In paragraph (h) of § 155.615, we propose a provision under which the Exchange would provide a case-by-case exception for applicants for whom documentation does not exist or is not reasonably available. We proposed this language to account for situations in which documentation cannot be obtained. This standard is consistent with the standard in subpart D at 45 CFR 155.315(g); examples of individuals for whom this provision may apply include homeless individuals, and victims of domestic violence or natural disasters.

Section 1411(c)(4)(B) of the Affordable Care Act provides that the Secretary may modify the methods used under the Secretary's program under section 1411 for the verification of information. In paragraph (i) of § 155.615, we propose to codify this flexibility, as we did in 45 CFR 155.315(h). Specifically, we propose that HHS may approve an Exchange Blueprint or a significant change to an Exchange Blueprint to modify the methods for the collection and verification of information as described in this subpart, as well as the specific information to be collected, based on a finding by HHS that the requested modification would reduce the administrative costs and burdens on individuals while maintaining accuracy and minimizing delay, and that any applicable requirements under 45 CFR 155.260, 45 CFR 155.270, paragraph (j) of this section, and section 6103 of the Code with respect to the confidentiality, disclosure, maintenance, or use of information will be met. We also note

that all information exchanges specified in this section will comply with 45 CFR 155.260 and 155.270.

In paragraph (j) of § 155.615, we propose that the Exchange will not require an applicant to provide information beyond what is necessary to support the process of the Exchange for eligibility determinations for exemptions, including the process for resolving inconsistencies described in § 155.615(g).

e. Eligibility Redeterminations for Exemptions During a Calendar Year (§ 155.620)

Section 1411(f)(1) of the Affordable Care Act provides that the Secretary shall establish procedures for periodic redeterminations of eligibility. In § 155.620, we propose to codify this by providing that the Exchange will redetermine an individual's eligibility for an exemption if the Exchange receives and verifies new information as reported by an individual. Similar to the standards in 45 CFR 155.330, in paragraph (b) of § 155.620, we propose that the Exchange will require an individual with a certificate of exemption to report any changes related to the eligibility standards described in § 155.605.

In 45 CFR 155.330(b)(3), which relates to the redetermination process for eligibility for enrollment in a QHP and for insurance affordability programs, we provide that the Exchange may establish a reasonable threshold for changes in income, such that an individual who experiences a change in income that is below the threshold is not required to report such change. We also note, however, that the Exchange will always allow an individual to report a change of any size. The intent of this provision was to limit the burden associated with reporting very small changes in income, with the understanding that the reconciliation process for advance payments of the premium tax credit would ultimately resolve these differences. We considered proposing similar flexibility for the purpose of eligibility for exemptions, but chose not to due to the absence of a reconciliation process. We solicit comment as to whether we should establish such flexibility in this section.

Also, in paragraph (b)(2) of § 155.620, we propose that the Exchange would allow an individual to report changes by the channels acceptable for the submission of an exemption application.

In paragraph (c), we propose that the Exchange use the verification processes used at the point of initial application, as described in § 155.615, in order to verify any changes reported by an individual prior to using the self-reported information in an eligibility determination for an exemption. In paragraph (c)(2), we propose that the Exchange notify an individual in accordance with § 155.610(i) after re-determining his or her eligibility based on a reported change. Lastly, in paragraph (c)(3), similar to standards established in 45 CFR 155.330(c), we propose that the Exchange will provide periodic electronic notifications regarding the requirements for reporting changes and an individual's opportunity to report any changes, to an individual who has a certificate of exemption and who has elected to receive electronic notifications, unless he or she has declined to receive such notifications.

We also note that unlike 45 CFR 155.330, we do not propose that the Exchange conduct periodic data matching regarding an individual's eligibility for an exemption. The data matches that are established in 45 CFR 155.330(d), which were established based on a combination of relevance to eligibility for insurance affordability programs and the availability of electronic data sources, relate to data that is not significant in determining eligibility for exemptions: Death, and whether an individual has been determined eligible for Medicare, Medicaid, CHIP, or the Basic Health Program (BHP), where applicable. Further, with the exception of income, we are unaware of electronic data sources with which it would be useful to conduct data matching for purposes of eligibility for exemptions, particularly given the fact that generally, exemptions that are provided by the Exchange will be provided for prior months based on actual information. And while income data are available, we do not believe that the administrative complexity associated with implementing these matches, which are not required under 45 CFR 155.330, produces sufficient benefit. We solicit comments as to whether we should establish similar data matching provisions, and if so, whether we should specify that the Exchange should handle changes identified through the matching process in a similar manner as to that specified in 45 CFR 155.330, or take a different approach.

Lastly, also unlike the eligibility process for enrollment in a QHP and for insurance affordability programs, we do not propose an annual Exchange redetermination process for exemptions. We believe that an individual's exemption status may change significantly from year to year, and have proposed in § 155.605 that certain exemptions for which information is unlikely to change (i.e., the exemptions for members of an Indian tribe, and for members of recognized religious sects) remain in effect unless an individual reports that his or her status has changed. For all other exemptions, we propose that an individual who has a certificate of exemption will submit an application for any subsequent calendar year for which he or she requests the same exemption. We do anticipate, however, that the Exchange can expedite and streamline this process significantly through the use of online accounts and other administrative tools, and welcome comment regarding how this can occur, including whether it should be reflected explicitly in regulation.

f. Options for Conducting Eligibility Determinations for Exemptions (§ 155.625)

As previously noted, section 1411 of the Affordable Care Act provides that the Secretary will establish a program for eligibility determinations for exemptions. As described above, in general, we propose that the Exchange conduct the eligibility process for exemptions. However, as noted in the State Exchange Implementation Questions and Answers released by HHS on November 29, 2011 [1] and the Frequently Asked Questions on Exchanges, Market Reforms, and Medicaid released by HHS on December 10, 2012,[2] based on significant comments and feedback from states, a state-based Exchange can be approved if it uses a federally-managed service to make eligibility determinations for exemptions. As such, in § 155.625, we propose this option, and we solicit comment regarding the specific configuration of a service that would be useful for states and also feasible within the time remaining for implementation.

First, in § 155.625(a), we propose that the Exchange may satisfy the requirements of this subpart by either executing all eligibility functions, directly or through contracting arrangements described in 45 CFR 155.110(a), or through the use of a federally-managed service, which is described in paragraph (b) of § 155.625.

Second, in § 155.625(b), we specify that the Exchange may implement an eligibility determination for an

[1] State Exchange Implementation Questions and Answers, published November 29, 2011: *http://cciio.cms.gov/resources/files/Files2/11282011/exchange_q_and_a.pdf.pdf.*

[2] Frequently Asked Questions on Exchanges, Market Reforms, and Medicaid, published December 10, 2012: *http://cciio.cms.gov/resources/files/exchanges-faqs-12-10-2012.pdf.*

exemption made by HHS, provided that the Exchange accepts the application, as specified in § 155.610(d), and issues the eligibility notice, as specified in § 155.610(i), and that verifications and other activities required in connection with eligibility determinations for exemptions are performed by the Exchange in accordance with the standards identified in this subpart or by HHS in accordance with the agreement described in paragraph (b)(4) of § 155.625. We also propose that under this option, the Exchange will transmit all applicant information and other information obtained by the Exchange to HHS, and adhere to HHS's determination. Lastly, in paragraph (b)(4), we propose that the Exchange and HHS enter into an agreement specifying their respective responsibilities in connection with eligibility determinations for exemptions.

We considered establishing a process under which HHS would accept the application for an exemption certificate and provide the notice under § 155.610(i), but did not propose this for two reasons. First, we believe that it is more straightforward, and also not administratively burdensome, for the Exchange to provide and accept the application, since the exemption application process shares similar features with the coverage application process, and the Exchange will be identified to applicants through outreach campaigns and other means as a primary contact point for many activities regarding the Affordable Care Act in a particular state. Further, it facilitates the provision of exemptions that originate through applications for eligibility for enrollment in a QHP and for insurance affordability programs, which will be accepted by the Exchange. Second, we propose that the Exchange issue the notice, and the certificate, as section 1311(d)(4)(H) of the Affordable Care Act specifies that the Exchange must, ''* * * grant a certification attesting that * * * an individual is exempt * * *'' Consequently, we see issuing the notice and any certificate as a necessary activity of the Exchange. We also believe that this does not present a significant administrative burden to the Exchange, since the contents of the notice can be standardized and provided by HHS. We solicit comments regarding maintaining these responsibilities at the Exchange, whether there are other responsibilities that should be specifically attributed to the Exchange or to HHS, and how this service can be implemented most efficiently, including with a focus on the first year of operations.

In § 155.625(c), we outline the standards to which the Exchange will adhere when eligibility determinations are made in accordance with paragraph (b). Such standards include that the arrangement does not increase administrative costs and burdens on individuals, or increase delay, and that applicable requirements under 45 CFR 155.260, 155.270, and 155.315(i), and section 6103 of the Code are met with respect to the confidentiality, disclosure, maintenance or use of information. These are the same standards that are used in 45 CFR 155.302(d) regarding advance payments of the premium tax credit and cost-sharing reductions.

g. Reporting (§ 155.630)

In § 155.630, we propose to codify the provisions specified in section 1311(d)(4)(I)(i) of the Affordable Care Act regarding reporting by the Exchange to IRS regarding eligibility determinations for exemptions. If the Exchange grants an individual a certificate of exemption in accordance with § 155.610(i), we propose that the Exchange will transmit to IRS the individual's name and SSN, exemption certificate number, and any additional information specified in additional guidance published by IRS in accordance with 26 CFR 601.601(d)(2). We solicit comment as to how this interaction can work as smoothly as possible.

h. Right to Appeal (§ 155.635)

In § 155.635, we propose that the Exchange will include notice of the right to appeal and instructions for how to appeal in any notification issued in accordance with § 155.610(i) and § 155.625(b)(1). We propose that an individual may appeal any eligibility determination or redetermination made by the Exchange in relation to an exemption. Additional detail about the appeal process is described in subpart F of the proposed rule titled, ''Medicaid, Children's Health Insurance Programs, and Exchanges: Essential Health Benefits in Alternative Benefit Plans, Eligibility Notices, Fair Hearing and Appeal Processes for Medicaid and Exchange Eligibility Appeals and Other Provisions Related to Eligibility and Enrollment for Exchanges, Medicaid and CHIP, and Medicaid Premiums and Cost Sharing'' (78 FR 4719).

B. Part 156—Health Insurance Issuer Standards Under the Affordable Care Act, Including Standards Related to Exchanges

Some individuals are currently enrolled in health coverage that is not statutorily designated as minimum essential coverage. Under section 5000A(f)(1)(E), the Secretary of Health and Human Services, in coordination with the Secretary of the Treasury, may designate other health benefits coverage as minimum essential coverage. This proposed rule would allow these individuals to keep their current coverage without incurring the shared responsibility payment for not maintaining minimum essential coverage, and would ensure that such coverage includes consumer protections.

This proposed rule proposes to designate certain types of existing coverage, not specified under section 5000A, as minimum essential coverage. Additionally, other types of coverage that are neither statutorily nor regulatory designated as minimum essential coverage in this regulation, may be recognized as minimum essential coverage if certain substantive and procedural requirements are met as proposed in this rule. These types of coverage, both those designated per se and those recognized by application are neither group health insurance coverage nor individual health insurance. Consumers with coverage recognized as minimum essential coverage in accordance with this regulation would be determined to have minimum essential coverage for purposes of the requirement to maintain minimum essential coverage.

Under section 36B of the Code, individuals eligible to enroll in minimum essential coverage other than coverage in the individual market are generally not eligible for the premium tax credit. Recognizing that some of the categories of coverage designated by the Secretary may be widely available, the Treasury Department will consider providing appropriate rules in guidance under Code section 36B to address when individuals are treated as eligible to enroll in various types of coverage designated by the Secretary.

a. Definition of Minimum Essential Coverage (§ 156.600)

This proposed rule cross references the Treasury regulation under section 5000A of the Code for the definition of minimum essential coverage.

b. Other Types of Coverage That Qualify as Minimum Essential Coverage (§ 156.602)

Prior to the Affordable Care Act, many people did not have access to employer-sponsored health coverage and could not qualify for, or otherwise seek alternatives to, individual health insurance coverage. Some individuals turned to other types of health coverage, such as self-funded student health coverage or state high risk pools.

We propose to specifically recognize certain types of coverage that have not been designated in the statute, as minimum essential coverage. HHS is familiar with the scope of coverage under these plans and they are comparable to other coverage that is designated as minimum essential coverage under the statute. The following types of coverage would be designated per se as minimum essential coverage for purposes of the minimum essential coverage requirement:

1. Self-funded student health insurance plans. Some institutions of higher education (as defined in the Higher Education Act of 1965) offer student health coverage to students with their own funds, assuming the risk for payment of claims. These plans are neither group health insurance nor individual insurance in most states.

2. Foreign health coverage. Many foreign nationals reside in this country and many of these individuals are covered by health coverage from their country of citizenship.

3. Refugee medical assistance supported by the Administration for Children and Families (45 CFR 400.90 through 400.107) This is a federally-funded program that provides up to eight months of coverage to certain non-citizens who are considered refugees under the Immigration and Naturalization Act.

4. Medicare advantage plans. The Medicare program under part C of title XVIII of the Social Security Act, which provides Medicare parts A and B benefits through a private insurer. While these plans provide the same coverage as that described in part A of Title XVIII of the Social Security Act, section 5000A(f)(1)(a)(i) specifically designated only Medicare coverage under Part A of Title XVIII as minimum essential coverage.

5. AmeriCorps coverage (45 CFR 2522.250(b)). Coverage offered to AmeriCorps volunteers, which is the domestic counterpart to the Peace Corps.

The types of coverage enumerated above have been in existence for a significant period of time. Although they vary in scope, they each provide a meaningful level of coverage that meets certain fundamental health needs for the people who are enrolled and protect against catastrophic losses. Three of the five are public programs, and even though student health plans are not individual or group market coverage, they are subject to certain consumer protections. Accordingly, individuals who wish to remain in these plans should not be subject to the shared responsibility payment under section 5000A of the Code. We welcome comments on these and whether there are other existing categories of coverage that should be recognized as minimum essential coverage. We also solicit comments regarding whether self-funded student health coverage should be limited to institutions of higher education, as defined by the Higher Education Act of 1965, or if coverage offered by other institutions, such as primary or secondary educational institution, or unaccredited educational institutions, should be included. Lastly, we included coverage for AmeriCorps volunteers in the list of types of coverage designated as minimum essential coverage. Coverage for Peace Corps volunteers is statutorily designated as minimum essential coverage, and since AmeriCorps is a similar organization, coverage offered to volunteers under AmeriCorp should be provided the same status as minimum essential coverage. We welcome comments on the inclusion of AmeriCorps coverage in the designated list.

State high risk pools are specifically noted in section 5000A(f)(1)(E) of the Code as coverage that could be designated by the Secretary as minimum essential coverage. This rule proposes that state high risk pools be designated as minimum essential coverage for a period of time to be determined by the Secretary. State high risk pools across the country vary in their coverage and benefits and some high risk pools may not substantially comply with the requirements of the Affordable Care Act, as specified in this proposed rule. Accordingly, while we are proposing that state high risk pools will initially be designated minimum essential coverage, we reserve the right to review and monitor the extent and quality of coverage, and in the future to reassess whether they should be designated minimum essential coverage or should be required to go through the process outlined in § 156.604 this proposed rule. We solicit comments on whether state high risk pools should automatically be designated as minimum essential coverage or whether they should be required to follow the process outlined in § 156.604 of this proposed rule.

c. Requirements for Recognition as Minimum Essential Coverage for Types of Coverage not Otherwise Designated Minimum Essential Coverage in the Statute or This Regulation (§ 156.604)

In addition to the types of coverage recognized above, there may be other types of individual coverage that provide important coverage to enrollees comparable to the statutorily designated types of minimum essential coverage. Accordingly, the proposed rule outlines a process in which other types of coverage could seek to be recognized as minimum essential coverage. Such recognition would apply only to the particular plan sponsored by the submitting organization seeking recognition.

Employment-based coverage would not be recognized as minimum essential coverage through this proposed process. This is because employment-based group coverage is generally subject to the provisions of either ERISA, the Code and/or the PHS Act, and there is a separate statutory category of minimum essential coverage under the Department of Treasury's authority that addresses eligible employer-sponsored plans.

Coverage recognized as minimum essential coverage through this process would need to offer substantially the same consumer protections as those enumerated in the Title I of Affordable Care Act relating to non-grandfathered, individual coverage to ensure consumers are receiving the protections of the Affordable Care Act. Furthermore, setting standards for other coverage qualifying as minimum essential coverage creates a disincentive for the creation of coverage that is designed to circumvent the important consumer protections of the Affordable Care Act. We solicit comments on the proposed ''substantially comply'' standard as it applies to other types of individual coverage. We also solicit comments on the process for recognizing other coverage as minimum essential coverage.

We propose that sponsors of minimum essential coverage also meet other criteria specified by the Secretary. We anticipate that there may be organizational standards that could disqualify a type of coverage from being recognized as minimum essential coverage, such as if individuals are prohibited from membership in the organization based on a health factor. We seek comment on the types of criteria the Secretary should consider in

this process as well as whether they should be added to the final rule.

We propose that sponsors of a plan that seeks to have such coverage recognized as minimum essential coverage adhere to certain procedures. Sponsors would submit to HHS electronically the following information: (1) Name of the organization sponsoring the plan; (2) name and title of the individual who is authorized to make, and makes, this certification on behalf of the organization; (3) address of the individual named above; (4) phone number of the individual named above; (5) number of enrollees; (6) eligibility criteria; (7) cost sharing requirements, including deductible and out-of-pocket maximum; (8) essential health benefits covered (as defined in § 1302(b) of the Affordable Care Act and its implementing regulations); and (9) a certification that the plan substantially complies with the provisions of Title I of the Affordable Care Act as applicable to non-grandfathered individual health insurance coverage. Once HHS receives a submission from a sponsor, it will review the information. If HHS determines that the coverage meets the necessary criteria to be recognized by the Secretary as minimum essential coverage, HHS would then inform the sponsor of the minimum essential coverage status of its coverage. This coverage would then be placed in a public list the types of coverage that have submitted information and have been determined by the Secretary to meet the eligibility requirements to be recognized as minimum essential coverage. The proposed rule also provides the Secretary the authority to revoke the minimum essential coverage status of a type of coverage that had previously been recognized minimum essential coverage if it has been determined that the coverage no longer meets the requirements to be minimum essential coverage. We solicit comments on whether there should be an appeal process for sponsors of coverage that had the minimum essential coverage status revoked by the Secretary. Such an appeal process could be internal within HHS, where the initial decision to revoke would be reviewed by an HHS staff person other than the one who made the initial decision. Comments are also welcome on whether this appeal process should be available to sponsors whose initial request for recognition of minimal essential coverage status for their coverage was denied by HHS.

d. HHS Audit Authority (§ 156.606)

Under this proposed rule, HHS would have the ability to audit plans to ensure the accuracy of the certification either randomly or when triggered by certain information. For example, errors in the submission, complaints from enrollees, communications with state insurance regulators, media reports, etc., may result in an audit of a sponsoring organization.

We believe this process strikes the appropriate balance between efficiency and ensuring compliance. Comments are solicited on the proposed procedures and if and when audits should be conducted. Comments are also welcome on whether sponsors of the types of coverage that have been designated as minimum essential coverage in the proposed rule should also submit the above information required to CMS.

Once recognized as minimum essential coverage, a plan would have to provide notice to its enrollees, specifying that the plan has been recognized as minimum essential coverage for the purposes of the individual coverage requirement. This notice could be included in existing enrollment materials and in other plan documents. The sponsor of any plan recognized as minimum essential coverage would also be required to provide the annual information reporting to the IRS specified in section 6055 of the Code and furnish statements to individuals enrolled in such coverage to assist them in establishing that they are not subject to the shared responsibility payment of section 5000A of the Code. We request comments on whether all plans and programs designated as minimum essential coverage under this regulation must provide notice to enrollees, or only plans recognized through the process in § 156.604 of this regulation.

III. Collection of Information Requirements

Under the Paperwork Reduction Act of 1995, we are required to provide 60-day notice in the **Federal Register** and solicit public comment before a collection of information requirement is submitted to the Office of Management and Budget (OMB) for review and approval. In order to fairly evaluate whether an information collection should be approved by OMB, section 3506(c)(2)(A) of the Paperwork Reduction Act of 1995 requires that we solicit comment on the following issues:

- The need for the information collection and its usefulness in carrying out the proper functions of our agency.
- The accuracy of our estimate of the information collection burden.
- The quality, utility, and clarity of the information to be collected.
- Recommendations to minimize the information collection burden on the affected public, including automated collection techniques.

The proposed rule entitled ''Exchange Functions: Eligibility for Exemptions'' proposes standards with regard to the minimum function of an Exchange to perform eligibility determinations and issue certificates of exemption from the shared responsibility payment. The rule proposes standards related to eligibility for exemptions, including the verification and eligibility determination process, eligibility redeterminations, options for conducting eligibility determinations, and reporting related to exemptions. The rule also proposes to designate certain types of coverage as minimum essential coverage and outlines substantive and procedural requirements that other types of coverage must fulfill in order to be recognized as minimum essential coverage under section 5000A(f)(5) of the Code, as added by the Affordable Care Act.

This section outlines the information collection requirements in the proposed regulation that will be addressed through this notice and comment process under the Paperwork Reduction Act (PRA). We are soliciting public comment on each of these issues for the following sections of the proposed rule that contain information collection requirements (ICRs). We used data from the Bureau of Labor Statistics to derive average costs for all estimates of salary in establishing the information collection requirements. Salary estimates include the cost of fringe benefits, calculated at 30.4 percent of salary, which is based on the June 2012 Employer Costs for Employee Compensation report by the U.S. Bureau of Labor Statistics. Additionally, we used estimates from the Congressional Budget Office to derive estimates of the number of exemption applications we anticipate Exchanges to receive, and the number of exemption eligibility determination notifications we anticipate Exchanges to generate.

1. Exemption Application (§ 155.610)

Throughout this subpart, we propose that the Exchange collect attestations from applicants for a certificate of exemption. These attestations will be collected using the application described in § 155.610(a). In § 155.610(a), we provide that the Exchange use an application created by HHS to collect the information necessary for determining eligibility for and granting certificates of exemption. The burden associated with this

requirement is the time and effort estimated for an applicant to complete an application. The exemption application may be available in both paper and electronic formats. An electronic application process would vary depending on each applicant's circumstances and which exemption an applicant is applying for, such that an applicant is only presented with questions relevant to the exemption for which he or she is applying. The goal is to solicit sufficient information so that in most cases no further inquiry will be needed. We estimate that on average, it will take .27 hours (16 minutes) for an application filer to complete an application, which is based on the estimates created for the single, streamlined application for enrollment in a QHP [3], with a 90% electronic/10% paper mix (noting that no specific application channel is specified in this proposed rule). While the Congressional Budget Office [4] estimates that 24 million individuals would be exempt from the shared responsibility penalty in 2016, it is unclear how many individuals will seek these exemptions from an Exchange. Some of these individuals will apply for and receive an exemption through the tax filing process, while others will apply for and receive an exemption through the Exchange. Therefore, of the 24 million individuals, we conservatively anticipate that approximately half will apply for an exemption through the Exchange, and half will seek an exemption through the tax filing process and specifically seek comment on this assumption. Accordingly, we estimate that approximately 12 million applications for exemptions will be submitted to the Exchange for calendar year 2016, for a total of 3.2 million burden hours. We also note that some individuals will apply for an exemption but be determined ineligible for an exemption, but it is difficult for us to estimate this number, and that in an unknown number of cases, multiple individuals in a single household may submit a single application.

We do not estimate any cost to the Exchanges of evaluating the exemption applications. For the purposes of this estimate, we expect all applications to be submitted electronically and processed through the system, which would result in no additional labor costs to evaluate and review the exemption applications. We request comment on this assumption.

We estimate that the cost to develop the exemption application will be significantly less than the estimated cost of developing the coverage application because the coverage application takes into account additional factors necessary in order to perform eligibility determinations for insurance affordability programs. We also note that as with the coverage application, HHS will be releasing a model application for use by Exchanges, which will significantly decrease the burden associated with the implementation of the application. On average, we estimate that the implementation of the exemption application will take approximately 1,059 hours of software development at a labor cost of $98.50 per hour, for a total cost of $104,312 per Exchange and a total cost of $5,319,887 for 51 Exchanges.

2. Notices (§§ 155.610, 155.615, 155.620)

Several provisions in subpart G outline specific notices that the Exchange will send to individuals during the exemption eligibility determination process, including the notice of eligibility determination described in § 155.610(i). The purpose of these notices is to alert an applicant of his or her eligibility determination for an exemption and related actions taken by the Exchange. To the extent that an applicant is determined eligible for an exemption, the notice of eligibility determination described in § 155.610(i) will serve as the certificate of exemption. Accordingly, we do not provide a separate burden estimate for the certificates of exemption described throughout this subpart. When possible, we anticipate that the Exchange will consolidate notices when multiple members of a household are applying together and receive an eligibility determination at the same time. Consistent with 45 CFR 155.230(d), the notice may be in paper or electronic format, based on the election of an individual, will be in writing, and will be sent after an eligibility determination has been made by the Exchange; these are the same standards that are used for eligibility notices for enrollment in a QHP through the Exchange and for insurance affordability programs, as described in 45 CFR 155.310(g). It is difficult to estimate the number of applicants that will opt for electronic versus paper notices, although we anticipate that a large volume of applicants will request electronic notification. We estimated the associated mailing costs for the time and effort needed to mail notices in bulk to applicants who request paper notices.

We expect that the exemption eligibility determination notice will be dynamic and include information tailored to all possible outcomes of an application throughout the eligibility determination process. A health policy analyst, senior manager, and an attorney would review the notice. HHS is currently developing model notices, which will decrease the burden on Exchanges associated with providing such notices. If a state opts to use the model notices provided by HHS, we estimate that the Exchange effort related to the development and implementation of the exemption eligibility determination notice will necessitate 44 hours from a health policy analyst at an hourly cost of $49.35 to learn exemptions rules and draft notice text; 20 hours from an attorney at an hourly cost of $90.14, and four hours from a senior manager at an hourly cost of $79.08 to review the notice; and 32 hours from a computer programmer at an hourly cost of $52.50 to conduct the necessary development. In total, we estimate that this will take a total of 100 hours for each Exchange, at a cost of approximately $5,971 per Exchange and a total cost of $304,497 for 51 Exchanges. For most notices outlined in subpart G of this proposed rule, we estimate that the notice development as outlined in the paragraph above, including the systems programming, would take each Exchange an estimated 100 hours to complete in the first year.

We expect that the burden on the Exchange to maintain this notice will be significantly lower than to develop it. We estimate that it will take each professional approximately a quarter of the time to maintain the notice as compared to developing the notice. Accordingly, we estimate the maintenance of the eligibility determination notice in subsequent years will necessitate 11 hours from a health policy analyst at an hourly cost of $49.35; 5 hours from an attorney at an hourly cost of $90.14; one hour from a senior manager at an hourly cost of $79.08 and eight hours from a computer programmer at an hourly cost of $52.50. In total, we estimate that this will take a total of 25 hours for each Exchange, at a cost of approximately $1,492 per Exchange and a total cost of $76,092 for 51 Exchanges.

Pursuant to section 5000A of the Code, the Secretary of Treasury must collect the necessary data from QHP issuers to determine the national

[3] The estimates may be found in the information collection request entitled, ''Data Collection to Support Eligibility Determinations for Insurance Affordability Programs and Enrollment through Affordable Insurance Exchanges, Medicaid and Children's Health Insurance Program Agencies.''

[4] Congressional Budget Office, ''Payments of Penalties for Being Uninsured Under the Affordable Care Act,'' September 2012 *http://cbo.gov/sites/default/files/cbofiles/attachments/09-19-12-Indiv_Mandate_Penalty.pdf.*

average bronze monthly premiums in order to assist in the computation of the shared responsibility payment. As such, HHS must request the monthly premium for all bronze level QHP's through all 51 Exchanges from QHP issuers. The burden associated on states and QHP issuers is already included in the information collection request entitled, ''Initial Plan Data Collection to Support QHP Certification and other Financial Management and Exchange Operations,'' and as such, we do not include a separate burden estimate here. As this information is already being collected for another purpose, there will be no additional burden on QHP issuers or states.

3. Electronic Transmissions (§§ 155.615, 155.630)

Section 155.615 specifies that the Exchange will utilize applicable procedures established under subpart D of the Exchange final rule in order to obtain data through electronic data sources for purposes of determining eligibility for and granting certificates of exemption. This involves the electronic transmission of data through procedures established under subpart D in order to verify an applicant's incarceration status, to verify eligibility for qualifying coverage in an eligible employer-sponsored plan, and to determine eligibility for advance payments of the premium tax credit. Section 155.615 also includes additional electronic transmissions that are specific to the eligibility process for exemptions, including those related to health care sharing ministries and religious conscience. In section 155.630, we propose that the Exchange will provide relevant information to IRS regarding certificates of exemption for the purposes of tax administration, such as the name and other identifying information for the individual who received the exemption. As we expect that these transmissions of information will all be electronic, and through the same channels used for reporting to IRS established in § 155.340, we do not anticipate for there to be any additional burden other than that which is required to design the overall eligibility and enrollment system. We do not provide a burden estimate for the electronic transmissions, as the cost is incorporated into the development of the IT system for the Exchange eligibility and enrollment system.

4. Verification and Change Reporting (§§ 155.615, 155.620)

The Exchange will use the same verification processes for new applications and for changes that are reported during the year. This includes the process for situations in which the Exchange is unable to verify the information necessary to determine an applicant's eligibility, which is described in section 155.615(g). It is not possible at this time to provide estimates for the number of applicants for whom additional information will be required to complete an eligibility determination, but we anticipate that this number will decrease as applicants become more familiar with the eligibility process for exemptions and as more data become available electronically. As such, for now, we estimate the burden associated with the processing of documentation for one submission from an applicant. We note that the burden associated with this provision is one hour for an individual to collect and submit documentation, and 12 minutes for eligibility support staff at an hourly cost of $28.66 to review the documentation, for a total cost of $6 per document submission.

5. ICRs Regarding Agreements (§ 155.625)

These provisions propose that an Exchange that decides to utilize the HHS service for making eligibility determinations for exemptions will enter into a written agreement with HHS. These agreements are necessary to ensure that the use of the service will minimize burden on individuals, ensure prompt determinations of eligibility without undue delay, and provide for secure, timely transfers of application information.

The burden associated with these provisions is the time and effort necessary for the Exchange to establish an agreement with HHS. We estimate that the creation of the necessary agreement will necessitate 35 hours from a health policy analyst at an hourly cost of $49.35, and 35 hours from an operations analyst at an hourly cost of $54.45 to develop the agreement; and 30 hours from an attorney at an hourly cost of $90.14 and five hours from a senior manager at an hourly cost of $79.14 to review the agreement. Accordingly, the total burden on the Exchange associated with the creation of the necessary agreement will be approximately 105 hours and $6,733 per Exchange, for a total cost of $343,382 for 51 Exchanges.

6. ICRs Regarding Minimum Essential Coverage (§§ 156.604(a)(3), 156.604(c))

Organizations that currently provide health coverage that are not statutorily specified and not designated as minimum essential coverage in this regulation may submit a request to CMS that their coverage be recognized as minimum essential coverage. As described in § 156.604(a)(3), sponsoring organizations would have to electronically submit to CMS information regarding their plans and certify that their plans meet substantially all of the requirements in the Title I of Affordable Care Act, as applicable to non-grandfathered, individual coverage. Because we do not know how many sponsoring organizations would submit a request, we have estimated the burden for one entity. We seek comments on how many organizations are likely to submit such requests. The burden associated with this certification includes the time needed to collect and input the necessary plan information, and maintain a copy for recordkeeping by clerical staff and for a manager and legal counsel to review it and for a senior executive to review and sign it. The certification would be submitted to CMS electronically at minimal cost. We estimate that it would take a combined total of 4.25 hours (3 hours for clerical staff at an hourly cost of 30.64, 0.5 hour for a manager at an hourly cost of $55.22, 0.5 hours for legal counsel at an hourly cost of $83.10 and 0.25 hours for a senior executive at an hourly cost of $112.43) to prepare and submit the information and certification to CMS and to retain a copy for recordkeeping purposes. The total cost for one organization is estimated to be approximately $190.

Section 156.604(c) specifies that sponsoring organizations whose health coverage are recognized as minimum essential coverage would have to provide a notice to enrollees informing them that the plan has been recognized minimum essential coverage for the purposes of the individual coverage requirement. The notice requirement may be satisfied by inserting the model statement provided in this proposed rule into existing plan documents. Plan documents are usually reviewed and updated annually before a new plan year begins. Sponsoring organizations may insert the model language in their plan documents at that time at minimal cost. Once the notice is included in the plan documents the first year, no additional cost will be incurred in future years. Therefore this notice is not subject to the Paperwork Reduction Act of 1995.

The sponsor of any type of coverage recognized as minimum essential coverage would also be required to provide the annual information reporting to the IRS specified in section 6055 of the Code and furnish statements to individuals enrolled in such coverage to assist them in establishing that they

are not subject to the shared responsibility payment of section 5000A of the Code. The Department of Treasury plans to publish for public comment, in accordance with the Paperwork Reduction Act of 1995 (44 U.S.C. Chapter 35), the required ICRs in the near future.

TABLE 1—PROPOSED ANNUAL INFORMATION COLLECTION REQUIREMENTS

Regulation section(s)	OMB control No.	Number of respondents	Number of responses	Burden per response (hours)	Total annual burden (hours)
§ 155.610	0938—New	51	51	1,059	54,009
§ 155.610	0938—New	12,000,000	12,000,000	0.27	3,200,000
§§ 155.610, 155.615, 155.620	0938—New	51	51	125	6,275
§ 155.615, 155.620	0938—New	1	1	0.2	0.2
§ 155.625	0938—New	51	51	105	5,355
§§ 156.604(b)	0938—New	1	1	4.25	4.25
Total					3,265,643

C. Submission of PRA-Related Comments

We have submitted a copy of this proposed rule to OMB for its review of the rule's information collection and recordkeeping requirements. These requirements are not effective until they have been approved by OMB.

To obtain copies of the supporting statement and any related forms for the proposed paperwork collections referenced above, access the CMS Web site at *http://www.cms.hhs.gov/Paperwork@cms.hhs.gov,* or call the Reports Clearance Office at 410–786–1326.

We invite public comments on these potential information collection requirements. If you comment on these information collection and recordkeeping requirements, please do either of the following:

1. Submit your comments electronically as specified in the **ADDRESSES** section of this proposed rule; or

2. Submit your comments to the Office of Information and Regulatory Affairs, Office of Management and Budget, Attention: CMS Desk Officer, (CMS—9958–P) Fax: (202) 395–5806; or Email: *OIRA_submission@omb.eop.gov.*

IV. Response to Comments

Because of the large number of public comments we normally receive on **Federal Register** documents, we are not able to acknowledge or respond to them individually. We will consider all comments we receive by the date and time specified in the **DATES** section of this preamble, and, when we proceed with a subsequent document, we will respond to the comments in the preamble to that document.

V. Summary of Regulatory Impact Statement

A. Overall Impact

We have examined the impact of this rule as required by Executive Order 12866 on Regulatory Planning and Review (September 30, 1993) and Executive Order 13563 on Improving Regulation and Regulatory Review (January 18, 2011). Executive Orders 12866 and 13563 direct agencies to assess all costs and benefits of available regulatory alternatives and, if regulation is necessary, to select regulatory approaches that maximize net benefits (including potential economic, environmental, public health and safety effects, distributive impacts, and equity). This rule has been designated a ''significant regulatory action'' under Executive Order 12866. Accordingly, this rule has been reviewed by the Office of Management and Budget.

The exemption provisions of this proposed rule set forth how and what exemptions can be received through the Exchange. Given the statute, these rules would generate exemption request activity; the proposed rules could also potentially affect the amount of shared responsibility payments made in a given year and the number of individuals who would enroll in health insurance plans to avoid shared responsibility payments. The impact of the proposed minimum essential coverage provisions would be similar; individuals whose coverage would be designated minimum essential coverage, under the authority of the Secretary of Health and Human Services to designate other health benefit coverage as minimum essential coverage, would, in the absence of the rule, pay shared responsibility payments or switch health insurance coverage so as not to incur those penalties.

As noted in our discussion, above, of information collection requirements, while CBO estimates that 24 million individuals would be exempt from the penalty in 2016, it is unclear how many individuals will seek these exemptions from an Exchange. These submissions would be associated with a variety of effects, including: costs to Exchanges to review the exemption requests; costs to applicants to request exemptions and retain documents; potential effects on enrollment in health coverage and its benefits; and a transfer from the federal government to individuals receiving exemptions in cases in which there is a foregone shared responsibility payment.

We note that the cost to an applicant of submitting a request and retaining documents is bounded above by the expected shared responsibility payment; otherwise, he or she would not necessarily apply for the exemption. Though we currently lack data to precisely characterize the effects of these proposed provisions, we note that the potential number of individuals seeking exemptions through the Exchange could place the overall impact of the proposed rule over the $100 million threshold for economic significance, even at a low economic cost per individual. The minimum essential coverage provisions included in this proposed rule could lead to transfers from the federal government to affected individuals (in this case, individuals whose coverage is designated to be minimum essential coverage) and have effects on health coverage enrollment (e.g., decreased switching between plans). Decreased switching between plans would entail time savings for affected individuals and uncertain effects on premium payments and use of medical services and products. We currently lack data to estimate the number of individuals whose coverage would be designated minimum essential coverage by this proposed rule. In light of our incomplete data and quantification of

impacts, we request data and comments on all likely economic effects of the provisions of this proposed rule.

VI. Regulatory Flexibility Act

The Regulatory Flexibility Act (5 U.S.C. 601 et seq.) (RFA) requires agencies to prepare an initial regulatory flexibility analysis to describe the impact of the proposed rule on small entities, unless the head of the agency can certify that the rule will not have a significant economic impact on a substantial number of small entities. The Act generally defines a ''small entity'' as (1) a proprietary firm meeting the size standards of the Small Business Administration (SBA); (2) a not-for-profit organization that is not dominant in its field; or (3) a small government jurisdiction with a population of less than 50,000. States and individuals are not included in the definition of ''small entity.'' HHS uses as its measure of significant economic impact on a substantial number of small entities a change in revenues of more than 3 to 5 percent. As the burden for this proposed regulation falls on either Exchanges or individuals, the proposed regulations will not have a significant economic impact on a substantial number of small entities, and therefore, a regulatory flexibility analysis is not required.

VII. Unfunded Mandates

Section 202 of the Unfunded Mandates Reform Act of 1995 (UMRA) requires that agencies assess anticipated costs and benefits before issuing any rule whose mandates require spending in any 1 year of $100 million in 1995 dollars, updated annually for inflation, by state, local, or tribal governments, in the aggregate, or by the private sector. In 2012, that threshold is approximately $139 million. This final rule does not mandate expenditures by state governments, local governments, tribal governments, in the aggregate, or the private sector, of $136 million. The majority of state, local, and private sector costs related to implementation of the Affordable Care Act were described in the RIA accompanying the March 2012 Medicaid eligibility rule. Furthermore, the proposed rule does not set any mandate on states to set up an Exchange.

VIII. Federalism

Executive Order 13132 establishes certain requirements that an agency must meet when it promulgates a proposed rule that imposes substantial direct effects on states, preempts state law, or otherwise has federalism implications. We wish to note again that the impact of changes related to implementation of the Affordable Care Act were described in the RIA associated with the Exchange final rule. As discussed in the Exchange final rule RIA, we have consulted with states to receive input on how the various Affordable Care Act provisions codified in this proposed rule would affect states.

Because states have flexibility in designing their Exchange, state decisions will ultimately influence both administrative expenses and overall premiums. However, because states are not required to create an Exchange, these costs are not mandatory. For states electing to create an Exchange, the initial costs of the creation of the Exchange will be funded by Exchange Planning and Establishment Grants. After this time, Exchanges will be financially self-sustaining with revenue sources left to the discretion of the state. In the Department's view, while this proposed rule does not impose substantial direct costs on state and local governments, it has federalism implications due to direct effects on the distribution of power and responsibilities among the state and federal governments relating to determining standards relating to health insurance coverage (that is, for QHPs) that is offered in the individual and small group markets. Each state electing to establish a state-based Exchange must adopt the federal standards contained in the Affordable Care Act and in this proposed rule, or have in effect a state law or regulation that implements these federal standards. However, the Department anticipates that the federalism implications (if any) are substantially mitigated because states have choices regarding the structure and governance of their Exchanges. Additionally, the Affordable Care Act does not require states to establish an Exchange; but if a state elects not to establish an Exchange or the state's Exchange is not approved, HHS, will establish and operate an Exchange in that state. Additionally, states will have the opportunity to participate in state Partnership Exchanges that would allow states to leverage work done by other states and the federal government, and will be able to leverage a federally-managed service for eligibility determination for exemptions.

In compliance with the requirement of Executive Order 13132 that agencies examine closely any policies that may have federalism implications or limit the policy making discretion of the states, the Department has engaged in efforts to consult with and work cooperatively with affected states, including participating in conference calls with and attending conferences of the National Association of Insurance Commissioners, and consulting with state officials on an individual basis.

Pursuant to the requirements set forth in section 8(a) of Executive Order 13132, and by the signatures affixed to this regulation, the Department certifies that CMS has complied with the requirements of Executive Order 13132 for the attached proposed regulation in a meaningful and timely manner.

IX. Congressional Review Act

This proposed rule is subject to the Congressional Review Act provisions of the Small Business Regulatory Enforcement Fairness Act of 1996 (5 U.S.C. 801 et seq.), which specifies that before a rule can take effect, the federal agency promulgating the rule shall submit to each House of the Congress and to the Comptroller General a report containing a copy of the rule along with other specified information, and has been transmitted to Congress and the Comptroller General for review.

In accordance with the provisions of Executive Order 12866, this regulation was reviewed by the Office of Management and Budget.

List of Subjects

45 CFR Part 155

Administrative practice and procedure, Advertising, Brokers, Conflict of interest, Consumer protection, Grant programs—health, Grants administration, Health care, Health insurance, Health maintenance organization (HMO), Health records, Hospitals, Indians, Individuals with disabilities, Loan programs—health, Organization and functions (Government agencies), Medicaid, Public assistance programs, Reporting and recordkeeping requirements, Safety, State and local governments, Technical assistance, Women, and Youth.

45 CFR Part 156

Administrative practice and procedure, Advertising, Advisory committees, Brokers, Conflict of interest, Consumer protection, Grant programs—health, Grants administration, Health care, Health insurance, Health maintenance organization (HMO), Health records, Hospitals, Indians, Individuals with disabilities, Loan programs—health, Organization and functions (Government agencies), Medicaid, Public assistance programs, Reporting and recordkeeping requirements, Safety, State and local governments, Sunshine Act, Technical Assistance, Women, and Youth.

For the reasons set forth in the preamble, the Department of Health and Human Services proposes to amend 45 CFR subtitle A, subchapter B, as set forth below:

PART 155—EXCHANGE ESTABLISHMENT STANDARDS AND OTHER RELATED STANDARDS UNDER THE AFFORDABLE CARE ACT

■ 1. The authority citation for part 155 continues to read as follows:

Authority: Title I of the Affordable Care Act, sections 1301, 1302, 1303, 1304, 1311, 1312, 1313, 1321, 1322, 1331, 1334, 1402, 1411, 1412, 1413.

Subpart A—General Provisions

■ 2. Amend § 155.20 by revising the introductory text to paragraph (1) for the definition of ''Applicant'' and revising the definition of ''Application filer'' to read as follows:

§ 155.20 Definitions.

* * * * *

Applicant means:

(1) An individual who is seeking eligibility for him or herself through an application submitted to the Exchange, excluding those individuals seeking eligibility for an exemption from the shared responsibility payment for not maintaining minimum essential coverage pursuant to subpart G, or transmitted to the Exchange by an agency administering an insurance affordability program for at least one of the following:

* * * * *

Application filer means an applicant, an adult who is in the applicant's household, as defined in 42 CFR 435.603(f), or family, as defined in section 36B(d)(1) of the Code, an authorized representative, or if the applicant is a minor or incapacitated, someone acting responsibly for an applicant, excluding those individuals seeking eligibility for an exemption pursuant to subpart G.

* * * * *

Subpart C—General Functions of an Exchange

■ 3. In § 155.200, revise paragraph (a) to read as follows:

§ 155.200 Functions of an Exchange.

(a) *General requirements.* The Exchange must perform the minimum functions described in this subpart and in subparts D, E, G, H, and K of this part.

* * * * *

■ 4. Add subpart G to read as follows:

Subpart G—Exchange Functions in the Individual Market: Eligibility Determinations for Exemptions

Sec.
155.600 Definitions and general requirements.
155.605 Eligibility standards for exemptions.
155.610 Eligibility process for exemptions.
155.615 Verification process related to eligibility for exemptions.
155.620 Eligibility redeterminations for exemptions during a calendar year.
155.625 Options for conducting eligibility determinations for exemptions.
155.630 Reporting.
155.635 Right to appeal.

Subpart G—Exchange Functions in the Individual Market: Eligibility Determinations for Exemptions

§ 155.600 Definitions and general requirements.

(a) *Definitions.* For purposes of this subpart, the following terms have the following meaning:

Applicant means an individual who is seeking an exemption for him or herself through an application submitted to the Exchange.

Application filer means an applicant, an individual who is liable for the shared responsibility payment in accordance with 26 CFR 1.5000A–1(c) for an applicant, an authorized representative, or if the applicant is a minor or incapacitated, someone acting responsibly for an applicant.

Exemption means an exemption from the shared responsibility payment.

Health care sharing ministry has the same meaning as it does in 26 CFR 1.5000A–3(b).

Required contribution has the same meaning as it does in 26 CFR 1.5000A–3(e).

Shared responsibility payment has the same meaning as in 26 CFR 1.5000A–1 *et seq.*

Indian tribe has the same meaning as it does in section 45A(c)(6) of the Code.

(b) *Attestation.* For the purposes of this subpart, any attestation that an applicant is to provide under this subpart may be made by the application filer on behalf of the applicant.

(c) *Reasonably compatible.* For purposes of this subpart, the Exchange must consider information through electronic data sources, other information provided by the applicant, or other information in the records of the Exchange to be reasonably compatible with an applicant's attestation if the difference or discrepancy does not impact the eligibility of the applicant for the exemption or exemptions for which he or she applied.

(d) *Accessibility.* Information, including notices, forms, and applications, must be provided to applicants in accordance with the standards specified in 45 CFR 155.205(c).

(e) *Notices.* Any notice required to be sent by the Exchange to an individual in accordance with this subpart must be provided in accordance with the standards specified in 45 CFR 155.230.

§ 155.605 Eligibility standards for exemptions.

(a) *Eligibility for an exemption through the Exchange.* Except as specified in paragraph (g) of this section, the Exchange must determine an applicant eligible for and issue a certificate of exemption for any month if the Exchange determines that he or she meets the requirements for one or more of the categories of exemptions described in this section for at least one day of the month.

(b) *Duration of single exemption.* Except as specified in paragraphs (c)(2), (f)(2), and (g) of this section, the Exchange may provide a certificate of exemption only for the calendar year in which an applicant submitted an application for such exemption.

(c) *Religious conscience.* (1) The Exchange must determine an applicant eligible for an exemption for any month if the applicant is a member of a recognized religious sect or division described in section 1402(g)(1) of the Code, and an adherent of established tenets or teachings of such sect or division for such month, in accordance with section 5000A(d)(2)(A) of the Code.

(2) *Duration of exemption for religious conscience.* (i) The Exchange must grant the certificate of exemption specified in this paragraph to an applicant who meets the standards provided in paragraph (c)(1) of this section for a month on a continuing basis, until the month after the month of the individual's 18th birthday, or until such time that an individual reports that he or she no longer meets the standards provided in paragraph (c)(1).

(ii) If the Exchange granted a certificate of exemption in this category to an applicant prior to him or her reaching the age of 18, the Exchange must send such an applicant a notice upon reaching the age of 18 informing the applicant that he or she must submit a new exemption application if seeking to maintain the certificate of exemption.

(3) The Exchange must provide an exemption in this category prospectively or retrospectively.

(d) *Membership in a health care sharing ministry.* (1) The Exchange must determine an applicant eligible for an

exemption for a month if the applicant is a member of a health care sharing ministry for such month as defined in 26 CFR 1.5000A–3(b).

(2) The Exchange may only provide an exemption in this category retrospectively.

(e) *Incarceration.* (1) The Exchange must determine an applicant eligible for an exemption for a month if he or she meets the standards as defined in 26 CFR 1.5000A–3(d) for such month.

(2) The Exchange may only provide an exemption in this category retrospectively.

(f) *Membership in an Indian tribe.* (1) The Exchange must determine an applicant eligible for an exemption for any month if he or she is a member of an Indian tribe, as defined in section 45A(c)(6) of the Code, for such month, as defined in 26 CFR 1.5000A–3(g).

(2) *Duration of exemption for membership in an Indian tribe.* The Exchange must grant the exemption specified in this paragraph to an applicant who meets the standards specified in § 155.605(f)(1) for a month on a continuing basis, until such time that the applicant reports that he or she no longer meets the standards provided in § 155.605(f)(1).

(3) The Exchange must provide an exemption in this category prospectively or retrospectively.

(g) *Hardship.* The Exchange must determine an applicant eligible for an exemption—

(1) For a month or months during which—

(i) He or she experienced financial or domestic circumstances, including an unexpected natural or human-caused event, such that he or she has a significant, unexpected increase in essential expenses;

(ii) The expense of purchasing minimum essential coverage would have caused him or her to experience serious deprivation of food, shelter, clothing or other necessities; or

(iii) He or she has experienced other factors similar to those described in paragraphs (g)(1)(i) and (ii) of this section that prevented him or her from obtaining minimum essential coverage, as described in 26 CFR 1.5000A–2.

(2) For a calendar year if he or she, or another individual the applicant attests will be included in the applicant's family, as defined in 26 CFR 1.5000A–1(d)(6), is unable to afford coverage for such calendar year in accordance with the standards specified in 26 CFR 1.5000A–3(e), calculated using projected annual household income, and provided that the applicant applies for this exemption prior to the last date on which he or she could enroll in a QHP through the Exchange for the calendar year for which the exemption is requested;

(3) For a calendar year if he or she was not required to file an income tax return for such calendar year because his or her gross income was below the filing threshold, but who nevertheless filed to receive a tax benefit, claimed a dependent with a filing requirement, and as a result, had household income exceeding the applicable return filing threshold described in 26 CFR 1.5000A–3(f)(2);

(4) For a calendar year if he or she has been determined ineligible for Medicaid for one or more months during the benefit year solely as a result of a State not implementing section 2001(a) of the Affordable Care Act; or

(5) For a calendar year if he or she, as well as one or more employed members of his or her family, as defined in 26 CFR 1.5000A–1(d)(6), has been determined eligible for affordable self-only employer-sponsored coverage pursuant to 26 CFR 1.5000A–3(e) through their respective employers for one or more months during the calendar year, but the aggregate cost of employer-sponsored coverage for all the employed members of the family exceeds 8 percent of household income for that month or those months.

§ 155.610 Eligibility process for exemptions.

(a) *Application.* Except as specified in paragraphs (b) and (c) of this section, the Exchange must use an application established by HHS to collect information necessary for determining eligibility for and granting certificates of exemption as described in § 155.605 of this subpart.

(b) *Alternative application.* If the Exchange seeks to use an alternative application, such application, as approved by HHS, must request the minimum information necessary for the purposes identified in paragraph (a) of this section.

(c) *Exemptions through the eligibility process for coverage.* If an individual submits the application described in 45 CFR 155.405 of this chapter and then requests an exemption, the Exchange must use information collected for purposes of the eligibility determination for enrollment in a QHP and for insurance affordability programs in making the exemption eligibility determination and must not request duplicate information or conduct repeat verifications that adhere to the standards specified in this subpart.

(d) *Filing the exemption application.* The Exchange must—

(1) Accept the application from an application filer; and

(2) Provide the tools to file an application.

(e) *Collection of Social Security Numbers.* (1) The Exchange must require an applicant who has a Social Security number to provide such number to the Exchange.

(2) The Exchange may not require an individual who is not seeking an exemption for himself or herself to provide a Social Security number, except as specified in paragraph (e)(3) of this section.

(3) The Exchange must require an application filer to provide the Social Security number of a tax filer who is not an applicant only if an applicant attests that the tax filer has a Social Security number and filed a tax return for the year for which tax data would be utilized for verification of household income and family size for an exemption under § 155.605(g)(2) that requires such verification.

(f) *Determination of eligibility; granting of certificates.* The Exchange must determine an applicant's eligibility for an exemption in accordance with the standards specified in § 155.605, and grant a certificate of exemption to any applicant determined eligible.

(g) *Timeliness standards.* (1) The Exchange must determine eligibility for exemption promptly and without undue delay.

(2) The Exchange must assess the timeliness of eligibility determinations made under this subpart based on the period from the date of application to the date the Exchange notifies the applicant of its decision.

(h) *Exemptions for previous tax years.* Except for the exemptions described in 155.605(c) and (f) of this subpart, after December 31 of a given calendar year, the Exchange will not accept an application for an exemption for months for such calendar year, and must provide information to individuals regarding the process for claiming an exemption through the tax filing process.

(i) *Notification of eligibility determination for exemptions.* The Exchange must provide timely written notice to an applicant of any eligibility determination made in accordance with this subpart. In the case of a determination that an applicant is eligible for an exemption, this notification must include the exemption certificate number for the purposes of tax administration.

(j) *Retention of records for tax compliance.* (1) Consistent with the requirements of section 6001of the Code, an individual must retain the

records that demonstrate not only receipt of the certificate of exemption but also qualification for the underlying exemption.

(2) In the case of any factor of eligibility that is verified through use of the special circumstances exception described in § 155.615(h) of this subpart, the records that demonstrate qualification for the underlying exemption are the information submitted to the Exchange regarding the circumstances that warranted the use of the exception, as well as records of the Exchange decision to allow such exception.

§ 155.615 Verification process related to eligibility for exemptions.

(a) *General rule.* Unless a request for modification is granted under paragraph (i) of this section, the Exchange must verify or obtain information as provided in this section in order to determine that an applicant is eligible for an exemption.

(b) *Verification related to exemption for religious conscience.* For any applicant who requests an exemption based on religious conscience, the Exchange must verify that he or she meets the standards specified in § 155.605(c) of this subpart by—

(1) Except as specified in paragraph (b)(2) of this section, accepting a form that reflects that he or she is approved by the Internal Revenue Service under section 1402(g)(1) of the Code;

(2) Except as specified in paragraphs (b)(3) and (4) of this section, accepting his or her attestation, and verifying that the religious sect or division to which the applicant attests membership is recognized by the Social Security Administration as an approved religious sect or division under section 1402(g)(1) of the Code.

(3) If information provided by an applicant regarding his or her membership in a religious sect or division is not reasonably compatible with other information provided by the individual or in the records of the Exchange, the Exchange must follow the procedures specified in paragraph (g) of this section.

(4) If an applicant attests to membership in a religious sect or division that is not recognized by the Social Security Administration as an approved religious sect or division under section 1402(g)(1) of the Code, the Exchange must determine the applicant ineligible for this exemption.

(c) *Verification related to exemption for membership in a health care sharing ministry.* For any applicant who requests an exemption based on membership in a health care sharing ministry, the Exchange must verify that the applicant meets the standards specified in § 155.605(d) of this subpart by—

(1) Except as provided in paragraphs (c)(2) and (3) of this section, accepting his or her attestation; and verifying that the health care sharing ministry to which the applicant attests membership is known to the Exchange based on data provided by HHS as a health care sharing ministry.

(2) If information provided by an applicant regarding his or her membership in a health care sharing ministry is not reasonably compatible with other information provided by the individual or in the records of the Exchange, the Exchange must follow the procedures specified in paragraph (g) of this section.

(3) If an applicant attests to membership in a health care sharing ministry that is not known to the Exchange as a health care sharing ministry, the Exchange must notify HHS and not determine the applicant eligible or ineligible until such time as HHS notifies the Exchange regarding the attested health care sharing ministry's status with respect to the standards specified in 26 CFR 1.5000A–3(b).

(d) *Verification related to exemption for incarceration.* (1) For any applicant who provides information attesting that he or she was incarcerated for a given month in accordance with the standards specified in § 155.605(e) of this subpart, the Exchange must verify his or her attestation through the same process as described in 45 CFR 155.315(e) of this part.

(2) To the extent that the Exchange is unable to verify an applicant's attestation that he or she was incarcerated for a given month in accordance with the standards specified in § 155.605(e) through the process described in 45 CFR 155.315(e) of this part, the Exchange must follow the procedures specified in paragraph (g) of this section.

(e) *Verification related to exemption for members of Indian tribes.* (1) For any applicant who provides information attesting that he or she is a member of an Indian tribe, the Exchange must use the process outlined in 45 CFR 155.350(c) of this part to verify that the applicant is a member of an Indian tribe.

(2) To the extent that the Exchange is unable to verify an applicant's status as a member of an Indian tribe through the process described in 45 CFR 155.350(c) of this part, the Exchange must follow the procedures specified in paragraph (g) of this section.

(f) *Verification related to exemption for hardship*—(1) *In general.* For any applicant who requests an exemption based on hardship, the Exchange must verify whether he or she has experienced the hardship to which he or she is attesting.

(2) *Cannot afford coverage.* For any applicant who requests an exemption based on the hardship described in § 155.605(g)(2) of this subpart, the Exchange must verify the unavailability of affordable coverage through the procedures used to determine eligibility for advance payments of the premium tax credit, as specified in subpart D of this part, and the procedures used to verify eligibility for qualifying coverage in an eligible employer-sponsored plan, as specified in 45 CFR 155.320(e) of this part.

(3) To the extent that the Exchange is unable to verify any of the information needed to determine an applicant's eligibility for an exemption based on hardship, the Exchange must follow the procedures specified in paragraph (g) of this section.

(g) *Inability to verify necessary information.* Except as otherwise specified in this subpart, for an applicant for whom the Exchange cannot verify information required to determine eligibility for an exemption, including but not limited to when electronic data is required in accordance with this subpart but data for individuals relevant to the eligibility determination for an exemption are not included in such data sources or when electronic data is required but it is not reasonably expected that data sources will be available within 2 days of the initial request to the data source, the Exchange—

(1) Must make a reasonable effort to identify and address the causes of such inconsistency, including typographical or other clerical errors, by contacting the application filer to confirm the accuracy of the information submitted by the application filer;

(2) If unable to resolve the inconsistency through the process described in paragraph (g)(1) of this section, must—

(i) Provide notice to the applicant regarding the inconsistency; and

(ii) Provide the applicant with a period of 30 days from the date on which the notice described in paragraph (g)(2)(i) of this section is sent to the applicant to either present satisfactory documentary evidence via the channels available for the submission of an application, as described in 45 CFR 155.610(d) of this subpart, except for by telephone, or otherwise to resolve the inconsistency.

(3) May extend the period described in paragraph (g)(2)(ii) of this section for

an applicant if the applicant demonstrates that a good faith effort has been made to obtain the required documentation during the period.

(4) During the period described in paragraph (g)(1) and (g)(2)(ii) of this section, must not grant a certificate of exemption based on the information subject to this paragraph.

(5) If, after the period described in paragraph (g)(2)(ii) of this section, the Exchange remains unable to verify the attestation, the Exchange must determine the applicant's eligibility for an exemption based on any information available from the data sources used in accordance with this subpart, if applicable, unless such applicant qualifies for the exception provided under paragraph (h) of this section, and notify the applicant of such determination in accordance with the notice requirements specified in § 155.610(i) of this subpart, including notice that the Exchange is unable to verify the attestation; and

(h) *Exception for special circumstances.* For an applicant who does not have documentation with which to resolve the inconsistency through the process described in paragraph (g)(2) of this section because such documentation does not exist or is not reasonably available and for whom the Exchange is unable to otherwise resolve the inconsistency, the Exchange must provide an exception, on a case-by-case basis, to accept an applicant's attestation as to the information which cannot otherwise be verified along with an explanation of circumstances as to why the applicant does not have documentation.

(i) *Flexibility in information collection and verification.* HHS may approve an Exchange Blueprint in accordance with 45 CFR 155.105(d) of this part or a significant change to the Exchange Blueprint in accordance with 45 CFR 155.105(e) of this part modify the methods to be used for collection of information and verification as set forth in this subpart, as well as the specific information required to be collected, provided that HHS finds that such modification would reduce the administrative costs and burdens on individuals while maintaining accuracy and minimizing delay, and that applicable requirements under 45 CFR 155.260, 155.270 of this part, and paragraph (j) of this section, and section 6103 of the Code with respect to the confidentiality, disclosure, maintenance, or use of such information will be met.

(j) *Applicant information.* The Exchange must not require an applicant to provide information beyond the minimum necessary to support the eligibility process for exemptions as described in this subpart.

§ 155.620 Eligibility redeterminations for exemptions during a calendar year.

(a) *General requirement.* The Exchange must redetermine the eligibility of an individual with an exemption if it receives and verifies new information reported by such an individual.

(b) *Requirement for individuals to report changes.* (1) Except as specified in paragraph (b)(2) of this section, the Exchange must require an individual who has a certificate of exemption from the Exchange to report any change with respect to the eligibility standards for the exemption as specified in § 155.605 of this subpart within 30 days of such change.

(2) The Exchange must allow an individual with a certificate of exemption to report changes via the channels available for the submission of an application, as described in § 155.610(d) of this subpart.

(c) *Verification of reported changes.* The Exchange must—

(1) Verify any information reported by an individual with a certificate of exemption in accordance with the processes specified in § 155.615 of this subpart prior to using such information in an eligibility redetermination.

(2) Notify an individual in accordance with § 155.610(i) of this subpart after redetermining his or her eligibility based on a reported change.

(3) Provide periodic electronic notifications regarding the requirements for reporting changes and an individual's opportunity to report any changes, to an individual who has a certificate of exemption who has elected to receive electronic notifications, unless he or she has declined to receive such notifications.

§ 155.625 Options for conducting eligibility determinations for exemptions.

(a) *Options for conducting eligibility determinations.* The Exchange may satisfy the requirements of this subpart—

(1) Directly or through contracting arrangements in accordance with 45 CFR 155.110(a) of this part; or

(2) Through the approach described in paragraph (b) of this section, subject to the standards in paragraph (c) of this section.

(b) *Use of HHS service.* Notwithstanding the requirements of this subpart, the Exchange may adopt an exemption eligibility determination made by HHS, provided that—

(1) The Exchange accepts the application, as specified in § 155.610(c) of this subpart, and issues the eligibility notice, as specified in § 155.610(i) of this subpart;

(2) Verifications and other activities required in connection with eligibility determinations for exemptions are performed by the Exchange in accordance with the standards identified in this subpart or by HHS in accordance with the agreement described in paragraph (b)(5) of this section;

(3) The Exchange transmits to HHS promptly and without undue delay and via secure electronic interface, all information provided as a part of the application or update that initiated the eligibility determination, and any information obtained or verified by the Exchange;

(4) The Exchange adheres to the eligibility determination made by HHS; and

(5) The Exchange and HHS enter into an agreement specifying their respective responsibilities in connection with eligibility determinations for exemptions.

(c) *Standards.* To the extent that eligibility determinations for exemptions are made in accordance with paragraph (b) of this section, the Exchange must ensure that –

(1) Such arrangement does not increase administrative costs and burdens on individuals, or increase delay; and

(2) Applicable requirements under 45 CFR 155.260, 155.270, and 155.315(i) of this part, and section 6103 of the Code with respect to the confidentiality, disclosure, maintenance or use of information are met.

§ 155.630 Reporting.

Requirement to provide information related to tax administration. If the Exchange grants an individual a certificate of exemption in accordance with § 155.610(i) of this subpart, the Exchange must transmit to the IRS at such time and in such manner as the IRS may specify –

(a) The individual's name, Social Security number, and exemption certificate number;

(b) Any other information required in guidance published by the Commissioner of the IRS in accordance with 26 CFR 601.601(d)(2).

§ 155.635 Right to appeal.

Individual appeals. The Exchange must include the notice of the right to appeal and instructions regarding how to file an appeal in any notification issued in accordance with § 155.610(i) and § 155.625(b)(1) of this subpart.

PART 156—PROCEDURAL AND SUBSTANTIVE REQUIREMENTS FOR MISCELLANEOUS COVERAGES WISHING TO BE DESIGNATED AS MINIMUM ESSENTIAL COVERAGE

■ 5. The authority citation for subpart G is revised to read as follows:

Authority: Title I of the Affordable Care Act, Sections 1301–1304, 1311–1312, 1321, 1322, 1324, 1334, 1341–1343, and 1401–1402, 1501, Pub. L. 111–148, 124 Stat. 119 (42 U.S.C. 18042).

■ 6. Add subpart G to read as follows:

Subpart G—Minimum Essential Coverage

Sec.
156.600 The definition of minimum essential coverage.
156.602 Other coverage that qualifies as minimum essential coverage.
156.604 Requirements for recognition as minimum essential coverage for types of coverage not otherwise designated minimum essential coverage in the statute or this subpart.
156.606 HHS audit authority.

Subpart G—Minimum Essential Coverage

§ 156.600 The definition of minimum essential coverage.

The term *minimum essential coverage* has the same meaning as provided in 26 CFR 1.5000A–2 for purposes of this subpart.

§ 156.602 Other coverage that qualifies as minimum essential coverage.

The following types of coverage are designated by the Secretary as minimum essential coverage for purposes of section 5000A(f)(1)(E) of the Code:

(a) *Self-funded student health coverage.* Coverage offered to students, by an institution of higher education (as defined in the Higher Education Act of 1965), where the institution assumes the risk for payment of claims.

(b) *Foreign health coverage.* Coverage for non-citizens residing in the United States, provided by their home country.

(c) *Refugee medical assistance supported by the Administration for Children and Families (45 CFR Subpart G).* A federally-funded program that provides up to 8 months of coverage to certain noncitizens who are considered refugees under the Immigration and Naturalization Act.

(d) *Medicare advantage plans.* Medicare program under Part C of title XVIII of the Social Security Act, which provides Medicare Parts A and B benefits through a private insurer.

(e) *State high risk pool coverage.* State high risk pools are designated as minimum essential coverage subject to further review by the Secretary.

(f) *Coverage for AmeriCorp volunteers.* Health coverage provided to volunteers of AmeriCorp.

(g) *Other coverage.* Other coverage that qualifies pursuant to § 156.604 of this subpart.

§ 156.604 Requirements for recognition as minimum essential coverage for types of coverage not otherwise designated minimum essential coverage in the statute or this subpart.

The Secretary may recognize ''other coverage'' as minimum essential coverage provided HHS determines that the coverage meets the following substantive and procedural requirements:

(a) *Coverage requirements.* A plan must meet substantially all the requirements pertaining to non-grandfathered, individual health insurance coverage, of title I of the Affordable Care Act.

(b) *Sponsoring organization requirements.* In order for ''other coverage'' to be considered by the Secretary for recognition as minimum essential coverage, the sponsor, or in the case of a government-sponsored program, the government agency responsible for administering the program, must meet criteria at the discretion the Secretary.

(c) *Procedural requirements.* Procedural requirements for recognition as miscellaneous minimum essential coverage. To be considered for recognition as minimum essential coverage, a sponsor must submit the following information to HHS:

(1) Identity of the plan sponsor and appropriate contact persons;

(2) Basic information about the plan, including:

(i) Name of the organization sponsoring the plan;

(ii) Name and title of the individual who is authorized to make, and makes, this certification on behalf of the organization;

(iii) Address of the individual named above;

(iv) Phone number of the individual named above;

(v) Number of enrollees;

(vi) Eligibility criteria;

(vii) Cost sharing requirements, including deductible and out-of-pocket maximum limit;

(viii) Essential health benefits covered; and

(ix) A certification by the appropriate individual, named pursuant to paragraph (c)(2)(ii) of this section, that the health coverage sponsored by the organization substantially complies with the requirements of title I of the Affordable Care Act and sponsor standards required by this rule.

(d) CMS will maintain a public list of types of coverage that the Secretary has recognized as minimum essential coverage.

(e) If at any time the Secretary determines that a type of coverage previously recognized as minimum essential coverage no longer meets the coverage requirements of paragraph (a) of this section or the sponsoring organization requirements of paragraph (b) of this section, the Secretary may revoke the recognition of such coverage.

(f) *Notice.* Once recognized as minimum essential coverage, a plan must provide notice to all enrollees of its minimum essential coverage status.

§ 156.606 HHS audit authority.

The Secretary may audit a plan or program recognized as minimum essential coverage under § 156.604 of this subpart at any time to ensure compliance with the requirements of § 156.604(a) of this subpart.

Dated: January 25, 2013.

Marilyn Tavenner,

Acting Administrator, Centers for Medicare & Medicaid Services.

Approved: January 28, 2013.

Kathleen Sebelius,

Secretary, Department of Health and Human Services.

[FR Doc. 2013–02139 Filed 1–30–13; 11:15 am]

BILLING CODE 4120–01–P

DEPARTMENT OF COMMERCE

National Oceanic and Atmospheric Administration

50 CFR Part 660

[Docket No. 110708376–3052–01]

RIN 0648–BB17

Fisheries Off West Coast States; Pacific Coast Groundfish Fishery; Trawl Rationalization Program; Cost Recovery

AGENCY: National Marine Fisheries Service (NMFS), National Oceanic and Atmospheric Administration (NOAA), Commerce.

ACTION: Proposed rule; request for comments.

SUMMARY: This action would implement a cost recovery program for the Pacific coast groundfish trawl rationalization program, which is a catch share program and type of limited access privilege program (LAPP), as required by the Magnuson-Stevens Fishery Conservation and Management Act (MSA). This action includes regulations

that affect all trawl rationalization program sectors (Shorebased Individual Fishing Quota (IFQ) Program, Mothership Coop Program, and Catcher/Processor Coop Program) managed under the Pacific Coast Groundfish Fishery Management Plan (FMP).

DATES: Comments on this proposed rule must be received no later than 11:59 p.m., eastern time on March 18, 2013.

ADDRESSES: You may submit comments on this document, identified by NOAA–NMFS–2012–0218, by any of the following methods:

- *Electronic Submission:* Submit all electronic public comments via the Federal e-Rulemaking Portal. Go to *www.regulations.gov/#!docketDetail;D=NOAA-NMFS-2012-0218,* click the ''Comment Now!'' icon, complete the required fields, and enter or attach your comments.
- *Mail:* Submit written comments to William W. Stelle, Jr., Regional Administrator, Northwest Region, NMFS, 7600 Sand Point Way NE., Seattle, WA 98115–0070; Attn: Ariel Jacobs.
- *Fax:* 206–526–6736; Attn: Ariel Jacobs.

Instructions: Comments sent by any other method, to any other address or individual, or received after the end of the comment period, may not be considered by NMFS. All comments received are a part of the public record and will generally be posted for public viewing on *www.regulations.gov* without change. All personal identifying information (*e.g.,* name, address, etc.), confidential business information, or otherwise sensitive information submitted voluntarily by the sender will be publicly accessible. NMFS will accept anonymous comments (enter ''N/A'' in the required fields if you wish to remain anonymous). Attachments to electronic comments will be accepted in Microsoft Word, Excel, or Adobe PDF file formats only.

Written comments regarding the burden-hour estimates or other aspects of the collection of information requirements contained in this proposed rule may be submitted to William W. Stelle, Jr., Regional Administrator, Northwest Region, NMFS, 7600 Sand Point Way NE., Seattle, WA 98115–0070, and to OMB by email to *OIRA_Submission@omb.eop.gov,* or fax to 202–395–7285.

FOR FURTHER INFORMATION CONTACT: Ariel Jacobs, 206–526–4491; (fax) 206–526–6736; *Ariel.Jacobs@noaa.gov.*

SUPPLEMENTARY INFORMATION:

Background

In January 2011, NMFS implemented a trawl rationalization program, a type of catch share program, for the Pacific coast groundfish fishery's trawl fleet. The program was adopted through Amendment 20 to the FMP and consists of three sectors: an IFQ program for the shorebased trawl fleet (including whiting and non-whiting fisheries); and cooperative (coop) programs for the at-sea mothership (MS) and catcher/processor (C/P) trawl fleets (whiting only). Allocations to the limited entry trawl fleet for certain species were developed through a parallel process with Amendment 21 to the FMP.

Since implementation, the Pacific Fishery Management Council (Council) and NMFS have been working to address additional regulatory requirements associated with the trawl rationalization program. One such requirement is cost recovery, where NFMS collects fees from the fishing industry to cover part of the costs of management, data collection, and enforcement of the trawl rationalization program. This rule would create a cost recovery program for the trawl rationalization program in compliance with the requirements of the MSA, and based upon a recommended methodology developed in coordination with the Council.

In accordance with the MSA, 16 U.S.C. 1853(c), 1853a(e), 1854(b), 1854(d)(2), 1855(d), the cost recovery program would collect mandatory fees of up to three percent of the ex-vessel value of groundfish by sector (Shorebased IFQ Program, MS Coop Program, and C/P Coop Program). The Council discussed the structure and methodology of the cost recovery program over its April, June, and September 2011 meetings, with final Council recommendations to NMFS during the September 2011 Council meeting. In addition, NMFS received further guidance on these issues from the Council at its September 2012 meeting.

Cost Recovery for Trawl Rationalization Versus Fixed Gear Sablefish Permit Stacking

During the April 2011 Council meeting, NMFS presented some general questions that initiated discussion regarding how to structure the cost recovery program. One issue addressed was whether one cost recovery program could be applied to both the trawl rationalization program and the sablefish permit stacking program. The Council recommended and NMFS is proposing to first pursue creation of the cost recovery program for the trawl rationalization program, with the understanding that this cost recovery program could then be used to inform a cost recovery program for the sablefish permit stacking program via a future rulemaking.

Cost Recovery for Trawl Rationalization by Sector

A second issue raised during the April 2011 Council meeting was whether the cost recovery fee should be assessed for the trawl rationalization program as a whole, or on a sector-by-sector basis. The Council recommended and NMFS is proposing that the cost recovery program should outline the fee methodology on a sector-by-sector basis. The use of a sector-by-sector approach in determining and assessing the fee was chosen due to the unique characteristics and costs associated with each of the three program sectors.

Coordinating Cost Recovery With Buyback

The Council recommended that NMFS structure the cost recovery program to coordinate with the buyback program (also called the federal fishing capacity reduction program) to reduce the burden on the affected public.

In 2003, NMFS ''bought back,'' for approximately $46 million, 91 vessels and 239 fishing permits from the groundfish trawl fishery and associated corollary fisheries of Dungeness crab and pink shrimp off the California, Oregon, and Washington coast. This $46 million buyback program included a $36 million loan to the industry that was to be paid by assessing buyback fees on landings (70 FR 40225, July 13, 2005). For the groundfish fishery, fees for repayment of the loan are to be paid on groundfish harvested using Federal trawl permits. Fish sellers are required to pay the fee and all parties making the first ex-vessel purchase of groundfish (''fish buyers'') are required to collect the fee, account for, and forward the fee revenue for the purpose of repaying the loan. Participants in the Shorebased IFQ Program and the MS Coop Program are subject to the repayment of the buyback loan, while the C/P Coop Program is not. Due to similarities in the need to collect and document payment of a fee for both the buyback program and the proposed cost recovery program, the cost recovery program would utilize elements of the buyback program as much as possible.

For example, for the Shorebased IFQ Program and MS Coop Programs only, the cost recovery program would require the payment of fees to NMFS at the same time that buyback fees are paid

(i.e., no later than the 14th of each month). Because the C/P Coop Program is not subject to the buyback program, the Council recommended and NMFS is proposing that participants in the C/P Coop Program pay their fees for the cost recovery program in the last quarter of the calendar year and no later than December 31 each year.

Another example of structuring the cost recovery program to coordinate with the buyback program is that the fish buyer would be responsible for payment of the fees to NMFS. For the Shorebased IFQ Program, the first receiver site license holder would be the party responsible for collecting and remitting cost recovery fees to NMFS. For the MS Coop Program, the parties jointly and severally responsible for collecting and remitting the cost recovery fee would be the owner of a vessel registered to an MS permit, the operator of a vessel registered to an MS permit, and the owner of the MS permit registered to that vessel.

While the C/P Coop Program is not subject to buyback, NMFS is proposing to structure the cost recovery program for all sectors similar to buyback. This means there may be cases where regulations are applied to the C/P Coop Program that would not necessarily be applied if the cost recovery program was not coordinating with the buyback program. Using the term ''fish buyer'' to apply to the C/P Coop Program is one such example. Catcher/processors are not in practice referred to as ''fish buyers'' because they are vessels that catch and process their own fish (*i.e.,* they do not buy it from themselves). However, to reduce complexity and keep the regulations as similar as possible for all three sectors, NMFS is proposing to define C/Ps as ''fish buyers,'' but only for purposes of the cost recovery program. Thus, for the C/P Coop Program, the fish buyer would be the responsible party and would include: the owner of a vessel registered to a C/P-endorsed limited entry trawl permit, the operator of a vessel registered to a C/P-endorsed limited entry trawl permit, and the owner of the C/P-endorsed limited entry trawl permit registered to that vessel. This situation is similar to that for the responsible party in the MS Coop Program. For the MS and C/P Coop Programs, all three parties are jointly and severally responsible for the obligations of a fish buyer.

In an effort to further coordinate the cost recovery program with the buyback program, NMFS intends to use the same online portal for payment as the buyback program, Pay.gov. By using the same portal, users are able to go to one place to make payments, maintain one profile, click on a link to pay buyback fees or click on a link to pay cost recovery fees. The forms submitted with payment for each fee would be contained in each link. If the user has an account with Pay.gov, information from the user's profile (*e.g.,* name, address, etc.) would auto-populate on both forms, streamlining the reporting and payment process. An example of a similar system is a bank account where you have both a credit card and a mortgage payment. You can go to the bank's one Web site and use your one user profile to make arrangements to pay both your credit card account and your mortgage, but they are separate links on the bank's Web site.

NMFS is exploring using one form to submit two payments, one payment to each program (cost recovery and buyback). While NMFS is exploring using one form for both programs, this rule proposes a separate cost recovery form for two reasons. First, it would delay the cost recovery rule to propose one form. Second, in exploring the use of one combined form for both programs, NMFS has found several drawbacks in addition to the benefits.

Using one combined form for both programs would likely make it easier for the IFQ and MS fish buyers to enter the required information (although they would still be required submit multiple payments directed to different accounts within NMFS). However, the drawbacks to one combined form for both programs include the potential for increased misreporting/mispayment, different consequences for misreporting/mispayment (late fee versus nonrenewal of permit/license), and increased time to correct errors, potentially harming business operations.

The cost recovery program and the buyback program are different programs with different purposes within NMFS. One is temporary and used to pay back a fixed term loan (buyback) while the other is used to recover part of NMFS' ongoing costs to manage the fishery (cost recovery). The cost recovery form would cover three sectors of one fishery (groundfish). The buyback form has fields for six loan payments in six separate fisheries, including state-run crab and shrimp fisheries. The cost recovery and buyback programs also have different consequences for misreporting or mispayment. For buyback, the consequences may result in late fees. For cost recovery, the consequences may result in a limited entry permit or first receiver site license not being renewed or reissued, which may result in lost fishing time or lost ability for first receivers to purchase groundfish. Using the bank account example, mispayment of your credit card online results in late charges (similar to buyback), while mispayment of your mortgage has different potential consequences. It is in the user's interest to keep these payments separate as they have very different consequences for nonpayment, and the user would likely not want to risk delay of their permit renewal because of an entry on the wrong line of the form.

In the first year of the buyback program, there were over 200 cases of misreporting/mispayment largely due to an entry on the wrong line of the fee collection form. Combining reporting for cost recovery payments on the same form as buyback could magnify these misreporting/mispayment issues. Any misreporting/mispayment on a combined form would likely take NMFS longer to correct because two different programs would be coordinating to decipher the error, which program it applies to, and then to pursue correction/payment. Because these two programs have very different misreporting/mispayment consequences, the increased time it would take to correct any misreporting/mispayment could harm the business operations of the fish buyers due to delayed opportunities. Another drawback to a combined form is that any audits of fish buyers by either program would be more complex, would involve both programs, and would take longer. If an audit uncovers mispayment/misreporting and takes a longer time to correct, it could also harm the business operations of the fish buyers.

With this rule, NMFS is proposing to use one online portal, Pay.gov, which would include a link to make payments to both programs (cost recovery and buyback). The cost recovery form that would be on the Pay.gov link would be designed to look very similar to the buyback form, with the addition of a box to fill out the weight (in lbs) and fees paid based on the cost recovery program fee percentage (which is different than the buyback fee percentage). In addition, certain fields on the form would auto-populate for users with an account on Pay.gov. With this system, NMFS expects that the ex-vessel value reported on the cost recovery form should match that reported on the buyback form, because both forms report based on the value of all groundfish species. NMFS is seeking public comment on the benefits and drawbacks of one form versus two. NMFS may implement one form for both programs at the final rule stage

depending on the comments received or other considerations, if appropriate.

While NMFS is proposing a cost recovery program structure that is similar to the buyback program, there are some differences. For example, NMFS is not proposing the $100 threshold for payment that is in the buyback program at 50 CFR 600.1102(i)(3). In addition, NMFS is only proposing online payment of fees through Pay.gov (*i.e.,* NMFS would not accept checks for payment of the cost recovery program fees). This is consistent with Council guidance at its September 2012 meeting.

Because NMFS is proposing to only allow online payment of fees, there is no need to maintain the $100 threshold that is in the buyback program. The buyback program requires fish buyers to remit payment only when the amount due exceeds $100. If the amount due is less than $100, it is carried forward. This reduces transaction costs because the buyback program accepts checks for payment, and processing checks for amounts less than $100 is inefficient. Since NMFS intends to accept only online payment, implementing a similar $100 threshold for the cost recovery program is unnecessary.

The portion of the affected public actually responsible for remitting payment to NMFS is limited to fish buyers. By requiring online payment, the payment process is more streamlined and more secure. In addition, it reduces NMFS' administrative burdens associated with processing fee payments, thereby reducing the costs associated with implementing the cost recovery program. NMFS does not expect this provision to create additional burden for the fleet, since IFQ first receivers are already required to use computers for reporting in the trawl rationalization program and the at-sea whiting fleet is comprised of businesses that are comfortable with online business transactions.

Fee Amount

The cost recovery fee amount due would be calculated by multiplying ex-vessel value by the applicable fee percentage, as proposed at § 660.115(c). For the C/P Coop Program, an alternate approach to calculating the fee amount would be to directly bill the sector. While this approach is not included in the regulatory language in this proposed rule, NMFS is soliciting public comment on this approach which is described in more detail in the preamble under ''Fee Payment and Collection.''

Ex-Vessel Value

Ex-vessel value by sector would be used in the cost recovery program in two ways: (1) The fee amount charged in a calendar year would be based on a percentage (not to exceed three percent) of the ex-vessel value of all groundfish, and (2) the percentage used to determine the fee amount would be calculated in part from ex-vessel value over the previous fiscal year.

Because the trawl rationalization program manages all groundfish species, the cost recovery program for each sector (IFQ, MS, and C/P) would be based on the value of all groundfish species. This is consistent with the buyback program, which collects fees from fish buyers in the Shorebased IFQ Program and the MS Coop Program based on the value of all groundfish. Initially, the Council determined that cost recovery should apply to the ex-vessel value of IFQ species for the Shorebased IFQ Program and to the ex-vessel value of Pacific whiting for the at-sea sectors (MS and C/P). However, at its September 2012 meeting, the Council provided NMFS with further guidance on this issue and supported that the ex-vessel value for each sector should be based on the value of all groundfish species.

Ex-vessel value (proposed at § 660.111 for the cost recovery program) would include all compensation (based on an arm's length transaction between a buyer and seller) that a fish buyer pays to a fish seller in exchange for groundfish species, including the value of all in-kind compensation and all other goods or services exchanged in lieu of cash. Ex-vessel value would also be determined before any deductions are made for transferred or leased allocation, or for any goods or services. For the Shorebased IFQ Program, the ex-vessel value would be based on the value of all groundfish species from IFQ landings. For the MS Coop Program, the ex-vessel value would be based on the value of all groundfish species delivered by a catcher vessel to an MS-permitted vessel. For the C/P Coop Program, the ex-vessel value would be based on the value as determined by the aggregate pounds of all groundfish species harvested by the vessel registered to a C/P-endorsed limited entry trawl permit, multiplied by the MS Coop Program average price per pound as announced by NMFS. For the C/P Coop Program, ex-vessel value is not available because there is no payment between a catcher vessel and a processor because the same vessel both catches and processes. Therefore, MS pricing is used as a proxy because it is a similar fishery (both are at-sea whiting fisheries). NMFS will announce the MS pricing that the C/P Coop Program would use in the upcoming calendar year with announcement of the fee percentage. See the preamble discussion under ''Notification of the Fee Percentage and MS Pricing'' for the notification process and how MS pricing will be calculated for the first year of the program.

Fee Percentage Calculation

In addition to structuring the cost recovery program fee payment to coordinate with the buyback program requirements, NMFS is proposing to structure the fee percentage calculation to be similar to that used by NMFS, Alaska Region for their IFQ programs (halibut/sablefish, rockfish, crab) because these fisheries have experience implementing cost recovery that our Region can utilize. In addition, some participants in the trawl rationalization program either participate in or are familiar with requirements for Alaska fisheries, so use of this formula would provide consistency to the regulated public.

The fee percentage would be calculated using this formula: $(DPC/V) \times 100$, where V is the total ex-vessel value of all groundfish species from the previous fiscal year for each of the three sectors as described above, and DPC (direct program costs) are the direct, recoverable program costs attributable to the sector. The DPC was further defined through the Council process, and was determined to be the incremental costs associated with ongoing management, data collection, and enforcement activities that would not have been incurred but for the implementation of the program (*i.e.,* incremental costs). Both the V and the DPC variables in the fee percentage equation may change every year, but the resulting percentage may not exceed three percent as required by the MSA.

As described in the Supplemental NMFS Report (Agenda Item H.2.b), available at the September 2012 Council meeting, data from the previous fiscal year can be used to determine the fee percentage to be used and applied to calculate the cost recovery fee amounts for the next calendar year. Once the fiscal year has ended, NMFS plans to calculate the fee percentage in October and/or November each year. Given that the fee percentage to be applied in an upcoming calendar year will be determined based on NMFS' incremental costs and ex-vessel revenues from the previous fiscal year, the actual amount collected in a calendar year could differ from the costs NMFS intended to recover. For

example, if the incremental costs from fiscal year 2012 were equal to $100,000, and the ex-vessel value from that sector in fiscal year 2012 was $3.75 million, the fee percent to be applied in calendar year 2013 would be 2.67 percent, as calculated by: (100,000/3,750,000) × 100 = 2.67.

Under this example, in calendar year 2013, fish buyers would determine the fee due by collecting 2.67 percent of the ex-vessel revenue of any given delivery. For calendar year 2013, the total fee amount collected by NMFS will depend on the actual ex-vessel revenues for 2013. To the extent ex-vessel revenues in calendar year 2013 are different from fiscal year 2012; the amount NMFS collects could be slightly over or under NMFS' costs from fiscal year 2012. Accordingly, NMFS will ensure that the aggregate fees being collected are appropriate by making an adjustment to the following calendar year's fee percentage.

For example, assume that NMFS collected $125,000 rather than the $100,000 in calendar year 2013 because ex-vessel revenue increased in 2013 as compared to fiscal year 2012. In that case, if NMFS' incremental costs for fiscal year 2013 remained the same at an amount of $100,000, rather than using $100,000 as the DPC when calculating the fee percentage to be applied in 2014, NMFS would use $75,000. Therefore, the fee percentage in 2014 would be reduced to account for any amount collected in excess.

NMFS proposes the calculation for the fee percentage at § 660.115(b). The process to notify the public of the applicable fee percentage and how the fee percentage will be calculated for the first year of the program are described in this preamble under ''Notification of the Fee Percentage and MS Pricing.''

Determining Program Costs

There was extensive discussion between NMFS, industry, and the Council, during the April, June, and September 2011 Council meetings, regarding how best to determine which specific costs associated with ongoing management, data collection and analysis, and enforcement activities were eligible to be recovered. The Council formed a Cost Recovery Committee (CRC) tasked with assisting NMFS to identify specific incremental costs on a sector-by-sector basis, and to identify any opportunities for long-term cost efficiencies within the program. The Council recommended using Appendix B of the CRC Report from the September 2011 Council meeting (Agenda Item G.6.b) as guidance in calculating incremental costs associated with the program. An emphasis was placed on the need for transparency within cost accounting procedures, and ensuring that the Council has an ongoing, periodic role in reviewing fee percentages. NMFS is committed to transparent cost accounting practices, including publishing an annual report detailing recoverable costs. See the ''NMFS Annual Report'' section of the preamble for more details and the timing of the annual report. In addition, between the proposed and final rule for the cost recovery program, NMFS intends to discuss with the states whether the costs of some state-performed activities resulting from the trawl rationalization program are costs that could be recovered, consistent with the requirements of the MSA. During this time, NMFS will also be determining its DPC from the previous fiscal year (October 1, 2011 through September 30, 2012) to be used for the 2013 fee percentage calculation. The 2013 fee percentage would be announced in the preamble for the final rule.

Notification of the Fee Percentage and MS Pricing

In the last quarter of the calendar year, NMFS would announce the next year's applicable fee percentage and, for the C/P Coop Program, the applicable MS pricing. Once the fiscal year has ended, NMFS plans to calculate the fee percentage in October and November each year and announce the fee percentage to be applied for the next calendar year in November or December before the fee percentage would apply on January 1. The fee percentage by sector would be announced each year in a **Federal Register** notice. This notice would also include the MS pricing to be used by the C/P Coop Program in determining their ex-vessel value. The MS pricing will be based on values reported by the MS Coop Program from the previous fiscal year. The notification would also include information on how and where to pay cost recovery fees.

For the first year of the cost recovery program, NMFS proposes publishing the fee percentages for each sector and, for the C/P Coop Program, the MS pricing as a part of the final rule for the cost recovery program. At its September 2011 meeting, the Council indicated that the fee percentages for the first year for each of three sectors (Shorebased IFQ Program, MS Coop Program, and C/P Coop Program) should not exceed three percent, two percent, and one percent, respectively. NMFS will calculate the actual fee percentage by sector between the proposed and final rule using the best available information and following the process explained in the preamble at ''Fee Percentage Calculation.'' The calculation may result in percentages above the Council recommendation, but would not exceed the MSA 3 percent cap. For the first year of the cost recovery program, NMFS may calculate the ex-vessel value to be used in the fee percentage calculation and the MS pricing using ex-vessel values reported on the buyback form or electronic fish tickets. Cost recovery fee collection would begin when the final rule becomes effective and would not be retroactive. In addition, NMFS will not include retroactive fees that were not collected in 2013, when calculating the fee percentage for 2014.

NMFS proposes the publication and notification process at § 660.115(b)(2).

NMFS Annual Report

NMFS intends to publish an annual report on the cost recovery program, likely in the spring of each year. The report would include information such as the fee percentage calculation, program costs, and ex-vessel value by sector. The report would likely be similar to those used by the Alaska Region in their IFQ Cost Recovery Programs (*http://www.fakr.noaa.gov/ram/ifqfees.htm* and *http://www.fakr.noaa.gov/sustainablefisheries/crab/crfaq.htm*) and may be included in the annual Trawl Rationalization Report. The report would be made available to the public electronically via the NMFS Northwest Region Groundfish Web site *http://www.nwr.noaa.gov/Groundfish-Halibut/Groundfish-Fishery-Management/Trawl-Program/index.cfm*.

Fee Payment and Collection

The structure of fee payment and collection for the Shorebased IFQ Program and MS Coop Program is proposed to be different than for the C/P Coop Program. At the end of the calendar year, NMFS would calculate and announce the fee percentage to be applied in the upcoming year for all three sectors. For the Shorebased IFQ Program, the IFQ first receiver (first receiver site license holder), as the fish buyer, would collect the fee from each catcher vessel at the time of landing groundfish in the IFQ fishery (fish seller). The IFQ first receiver would hold those fee amounts in a separate deposit account. Each fish buyer (IFQ first receiver) would be required to maintain a segregated account at a federally insured financial institution for the sole purpose of depositing collected fee revenue and disbursing the fee revenue directly to NMFS. This account is called a ''deposit account,'' as proposed in regulation at

§ 660.115(d)(1)(ii)(A). Each fish buyer would also be required to deposit all collected fee revenue not previously deposited that the fish buyer collects through a date not more than two calendar days before the date of deposit. Neither the deposit account nor the principal amount of deposits in the account may be pledged, assigned, or used for any purpose other than aggregating collected fee revenue for disbursement to NMFS. The fish buyer would be entitled, at any time, to withdraw deposit interest, if any, but never deposit principal, from the deposit account for the fish buyer's own use and purposes. The fish buyer would be responsible for remitting payment to NMFS on a monthly basis at the same time the buyback fee is due (*i.e.,* no later than the 14th of each month, or more frequently if the amount in the account exceeds the account limit for insurance purposes). Payment to NMFS would be the full amount of deposit principal from the deposit account. NMFS is proposing regulatory language for this section that very closely mirrors buyback program regulatory language from § 600.1102(i).

For the MS Coop Program, the structure of fee payment and collection would be the same as for the Shorebased IFQ Program, except that the fish buyer and fish seller would be different and, because the fleet operates at sea, there is no ''landing.'' For the MS Coop Program, each catcher vessel (fish seller, including vessels registered to an MS/CV-endorsed limited entry trawl permit and any limited entry trawl permits without an MS/CV endorsement while they are participating in the MS Coop Program) would be charged the fee at the time of delivery to the mothership (fish buyer—defined as the owner of a vessel registered to an MS permit, the operator of a vessel registered to an MS permit, and the owner of the MS permit registered to that vessel). The fish buyer would then be responsible for remitting payment to NMFS monthly in coordination with the buyback fee (*i.e.,* no later than the 14th of each month). For any post-delivery payments by the mothership to the catcher vessel, the mothership shall charge the fee from the catcher vessel at the time of payment and remit that fee to NMFS in the upcoming month's payment.

For the C/P Coop Program, the structure of fee payment and collection would be different than the Shorebased IFQ and MS Coop Programs. At the end of the calendar year, with NMFS' announcement of the fee percentage to be applied in the upcoming year, NMFS would also announce the MS pricing to be used by the C/P Coop Program to calculate their fee amount in the upcoming year. For the C/P Coop Program, the C/P (fish buyer—defined as the owner of a vessel registered to a C/P-endorsed limited entry trawl permit, the operator of a vessel registered to a C/P-endorsed limited entry trawl permit, and the owner of the C/P-endorsed limited entry trawl permit registered to that vessel) would be responsible for paying the full fee in the last quarter of the calendar year and by December 31 each year. The fee would be for the harvests of groundfish for the calendar year by each vessel registered to a C/P-endorsed limited entry trawl permit. For the purposes of the cost recovery program, the C/P would be described as both the fish buyer and fish seller. Unlike the Shorebased IFQ Program and the MS Coop Program, fish buyers in the C/P Coop Program would not be required to maintain segregated deposit accounts because the fish seller and the fish buyer is always the same entity and they only make one payment to NMFS per year.

As mentioned above under ''Fee Amount,'' for the C/P Coop Program, there could be an alternate approach to calculating the fee amount. Instead of multiplying the ex-vessel value (using MS pricing) by the fee percentage, NMFS could directly bill the sector in the last quarter of the year so long as the value for DPC of the C/P Coop Program in the fee percentage calculation for the previous fiscal year is an amount equal to or less than three percent of the ex-vessel value of the fishery (using MS pricing). Under this alternate approach, NMFS would still calculate the fee percentage using information from the previous fiscal year in order to ensure that the recovery fee would not exceed three percent. NMFS would also still announce the amount due from the C/P Coop Program in the fall before the fishing year in which the fee amount would be applied. This way, the C/P Coop Program would know at the start of the fishing year how much money would be due to NMFS for cost recovery at the end of the year. Under this alternate approach, the C/P Coop would be responsible for figuring out which ''fish buyers,'' as defined for the cost recovery program, are responsible for which portion of the payment and notifying NMFS. NMFS would then bill each fish buyer accordingly. This alternate approach would result in more accurate payment and less adjustments for over or under payment between years. While this approach is not included in the regulatory language in this proposed rule, NMFS is soliciting public comment on this approach and may implement it in the final rule.

NMFS proposes fee payment and collection regulations at § 660.115(d)(1) for the Shorebased IFQ Program and the MS Coop Program, and at § 660.115(d)(2) for the C/P Coop Program. NMFS proposes to define ''fish buyer'' and ''fish seller'' at § 660.111.

Recordkeeping, Reporting, and Auditing

Similar to the buyback program requirements at § 600.1102(i)(4), each fish buyer would be required to maintain certain information, in a secure and orderly manner, for a period of at least three years from the date of each transaction involved. The recordkeeping requirements for the cost recovery program vary by sector and are proposed at § 660.113(b)(5)(ii) for the Shorebased IFQ Program, § 660.113(c)(5)(ii) for the MS Coop Program, and § 660.113(d)(5)(ii) for the C/P Coop Program. The fish buyer would be required to maintain records by landing, delivery, or harvest for the IFQ, MS, and C/P sectors, respectively. For the Shorebased IFQ Program, if electronic fish tickets contain some or all of the data that § 660.113(b)(5)(ii) proposes to require, then fish buyers could use such records to meet appropriate portions of this section's recordkeeping requirements. In addition to records by landing, delivery, or harvest, fish buyers would be required to maintain records of all fee collection deposits to and disbursements from the deposit account. For the Shorebased IFQ and MS Coop Programs, this would include the following information: the dates and amounts of deposits, the dates and amounts of disbursements to NMFS, and the dates and amounts of disbursements to the fish buyer or other parties of interest earned on deposits. For the C/P Coop Program, which would not be required to have a separate deposit account, this would include the following information: the date of each fee disbursement and the total amount disbursed.

NMFS proposes reporting requirements that differ by sector. All three sectors would be required to complete a cost recovery form online with fee payment (as described above in the preamble under ''Coordinating Cost Recovery with Buyback''). However, the contents of what is reported in the form would vary by sector. In general, each fish buyer would be required to report their name, address, phone number, identifier (state buyer code or USCG vessel documentation number), dates, weight of groundfish, ex-vessel value, and fee collected.

NMFS also proposes additional reporting requirements for the at-sea whiting sectors (MS and C/P) to verify information reported on the cost recovery form. All three sectors require 100 percent monitoring which can be used to verify weights of groundfish. The Shorebased IFQ Program also already requires reporting weight and ex-vessel value through electronic fish tickets. This information can be used by NMFS to verify that fish buyers are making accurate cost recovery payments and reporting accurate information on the cost recovery form. The at-sea sectors do not have a similar way to verify the ex-vessel value they have paid or reported. In order to hold the three sectors to similar standards and to ensure fair and accurate fee payment among the sectors, NMFS proposes to require an annual report from the at-sea sectors. While the buyback program only requires an annual report of fish buyers in the MS Coop Program if requested by NMFS during an audit (as specified at § 600.1102(i)(5)), NMFS proposes for the cost recovery program to require an annual report from fish buyers in the MS and C/P Coop Programs. The report would be due by March 31 of the year following the fishing year (which is January 1—December 31). This would align with the deadline for the coop report to NMFS, streamlining when NMFS receives sector information. However, the cost recovery annual report would be submitted by fish buyers rather than the coop managers. The cost recovery annual report submitted by fish buyers would vary slightly between the at-sea sectors and is proposed at § 660.113(c)(5)(i)(B) for the MS Coop Program and § 660.113(d)(5)(i)(B) for the C/P Coop Program. The annual report submitted by fish buyers generally would include, but is not limited to: total weight, total ex-vessel value, total fee amounts collected, and dates and amounts of disbursement(s) to the Fund. NMFS is proposing an annual report for both of the at-sea sectors for fairness and consistency; however, there are some distinctions between the sectors. Because in the C/P Coop Program the fish buyer and fish seller are the same entity, because they would only pay at end of year, because they would not be required to have a deposit account, and because they are not paying the fee amount based on their own ex-vessel value (they pay based on MS ex-vessel value), NMFS solicits public comment on the need for an annual report in the C/P Coop Program. NMFS considered whether the mandatory economic data collection (EDC) report, required at § 660.114, could be used to verify information reported by the at-sea sectors. However, it would be nearly two years before EDC information would be available for comparison to ex-vessel values reported for cost recovery. If NMFS used that information to pursue any mispayments, it could cause problems for the fish buyers and fish sellers whose business arrangements may have changed over time. Therefore, NMFS is proposing the annual report as a more timely method to verify payment and values reported on the cost recovery form.

NMFS proposes reporting requirements that vary by sector at: § 660.113(b)(5)(i) for the Shorebased IFQ Program, § 660.113(c)(5)(i) for the MS Coop Program, and § 660.113(d)(5)(i) for the C/P Coop Program.

NMFS or its agents may audit the financial records of fish buyers and fish sellers in each sector in order to ensure proper fee payment, collection, deposit, disbursement, accounting, recordkeeping, and reporting. Fish buyers and fish sellers must respond to any inquiry by NMFS or an NMFS agent within 20 calendar days of the date of issuance of the inquiry, unless an extension is granted by NMFS. Fish buyers and fish sellers must make all relevant records available to NMFS or NMFS' agents at reasonable times and places and promptly provide all requested information reasonably related to these records. NMFS may employ a third party agent to conduct the audits. The NMFS auditor may review and request copies of additional data provided by the submitter, including but not limited to: previously audited or reviewed financial statements, worksheets, tax returns, invoices, receipts, and other original documents substantiating the data submitted. NMFS proposes regulations on audits at § 660.115(d)(4)(iii).

Failure to Pay

If a fish buyer or fish seller is found responsible for failure to pay all or a portion of the cost recovery program fee, NMFS may pursue an enforcement action for violation of the MSA, and/or may forward the issue to the U.S. Department of Treasury for collections. In addition, the Council recommended, and NMFS is proposing, a linkage between failure to pay and non-renewal of a limited entry MS permit, non-renewal of C/P-endorsed limited entry permit, and non-issuance of IFQ first receiver site license. This mechanism is being proposed as an additional means for ensuring payment. Failure to pay would only affect permit renewal and would not affect permit transfers (*i.e.,* changes in owner of the permit or the vessel registered to the permit).

If NMFS determines a fish buyer, as the party responsible for payment to NMFS, has not submitted a complete cost recovery form and corresponding payment by the due date, NMFS would at any time thereafter notify the fish buyer in writing via an initial administrative determination (IAD) letter.

Fish buyers that receive an IAD letter would have 30 calendar days to pay the specified amount or appeal the IAD. All appeals must be submitted to NMFS in writing and must include any relevant information to support the appeal. If the fish buyer does not appeal and is still out of compliance, NMFS would notify the fish buyer via a final decision letter and would require payment within 30 calendar days of the final decision letter. If payment is still not received, NMFS would forward the case to the appropriate authorities for the purposes of collection. From the date on the final decision, if the fish buyer is determined to be out of compliance, NMFS would not renew any subject MS permit or C/P-endorsed limited entry trawl permit, or reissue an IFQ first receiver site license until all cost recovery fees due have been paid.

NMFS proposes prohibitions at § 660.112(a)(6) and the IAD and appeals process at § 660.115(d)(3)(ii).

NMFS advises the public that NMFS National Appeals Office (*http://www.nmfs.noaa.gov/mb/appeals/mb7.htm*) is expected to publish a final rule that may affect the appeals process for the cost recovery program. The National Appeals Office proposed rule (77 FR 33980, June 8, 2012) would establish procedures for the National Appeals Office to review, and if necessary correct, decisions about certain limited access privilege programs under Section 303A of the MSA, 16 U.S.C. 1853a. If the National Appeals Office rule goes final before the cost recovery program rule and if it would affect the appeals process for cost recovery, the cost recovery program final rule would announce those changes.

Housekeeping

NMFS proposes to remove paragraphs at §§ 660.150(d)(5) and 660.160(d)(5) that were previously placeholders for the cost recovery program. These paragraphs had the responsibility for payment falling on the coop permit when it should be on the MS permit and the C/P-endorsed limited entry permit, respectively.

NMFS proposes to remove paragraphs on initial issuance of MS limited entry

permits and C/P endorsements on limited entry trawl permits at §§ 660.150(f)(6) and 660.160(e)(6), respectively. These paragraphs are no longer needed because they were for a one-time issuance of these permits and endorsements and the deadline to apply was November 1, 2010. NMFS issued these permits and endorsements to qualifying applicants and they became effective beginning in 2011. NMFS is not proposing to remove the paragraphs on quota share (QS) permits and MS/CV endorsements because these sections of the regulations may be changed as a result of litigation.

Classification

Pursuant to section 304(b)(1)(A) of the MSA, the NMFS Assistant Administrator has determined that this proposed rule is consistent with the Pacific Coast Groundfish FMP, other provisions of the MSA, and other applicable law, subject to further consideration after public comment.

The Council prepared a final environmental impact statement (EIS) for Amendment 20 and Amendment 21 to the Pacific Coast Groundfish FMP. The Amendment 20 and 21 EISs are available on the Council's Web site at *http://www.pcouncil.org/* or on NMFS' Web site at *http://www.nwr.noaa.gov/Groundfish-Halibut/Groundfish-Fishery-Management/Trawl-Program/index.cfm.* The regulatory changes in this proposed rule were categorically excluded from the requirement to prepare a NEPA analysis.

Pursuant to the procedures established to implement section 6 of Executive Order 12866, the Office of Management and Budget has determined that this proposed rule is not significant.

An initial regulatory flexibility analysis (IRFA) was prepared, as required by section 603 of the Regulatory Flexibility Act (RFA). The IRFA describes the economic impact this proposed rule, if adopted, would have on small entities. A description of the action, why it is being considered, and the legal basis for this action are contained at the beginning of this section in the preamble and in the **SUMMARY** section of the preamble. A Regulatory Impact Review (RIR) was also prepared on the action and is included as part of the IRFA. A copy of the IRFA is available from NMFS (see **ADDRESSES**) and a summary of the IRFA, per the requirements of 5 U.S.C. 604(a) follows:

The cost recovery program is a regulatory amendment that further implements Amendment 20 to the FMP. While cost recovery is required by the MSA, the Council did consider alternative ways of recovering costs. Cost recovery was analyzed in the Amendment 20 EIS and additional implementation options were discussed over the Council's April, June, and September 2011, and September 2012 meetings.

The regulations proposed in this rule are the basis of the Council and NMFS exploring various options. In the Amendment 20 EIS, Appendix A, Section A–2.3.3.a and b, provides some options for the cost recovery and fee structure in the Shorebased IFQ Program. The Amendment 20 EIS, Appendix A options for the Shorebased IFQ Program included options for fees of up to three percent of the ex-vessel value, consistent with the MSA and full cost recovery. The full cost recovery option would be achieved through landing fees and privatization of elements of the management system (noting that stock assessments and electronic fish tickets would not be privatized). The Council estimated that initially the costs of the Shorebased IFQ Program would exceed the three percent fee, so the Council also considered adjusting the provisions of tracking and monitoring program so that the three percent fee covers the agency costs. Appendix B to the Amendment 20 EIS mentions that cost recovery may apply to the MS and C/P Coop Programs, but does not discuss options.

The Council further discussed the structure and methodology of the cost recovery program over its April, June, and September 2011 meetings, with final Council recommendations to NMFS during the September 2011 Council meeting and further guidance on these issues at its September 2012 meeting. Some of the options considered by the Council over these meetings were: (1) Cost recovery for the trawl rationalization program and the sablefish permit stacking program at the same time; (2) cost recovery shared by all three sectors (1 program), shared by MS and C/P Coop Programs and separate cost recovery for IFQ (2 programs), or a program for each sector (3 programs); (3) what entity should pay the fee in each sector (catcher vessel, fish buyer, coop); (4) how fee collection should be structured (bill entity in last quarter of year, bill at time of landing and collect monthly); (5) link to permitting requirements (no linkage, suspend quota transactions until payment, suspend permit renewal until payment); (6) how agency costs are identified (implement a tracking system, random sampling, yearly projections); (7) how ex-vessel value is calculated (from EDC, from buyback, from electronic fish ticket, from paper fish tickets, use shorebased pricing and at-sea tonnage, require new document); and (8) what groundfish species to include when calculating ex-vessel value.

The administrative costs of this program are mainly associated with groundfish species and bycatch of Pacific halibut as managed under the trawl rationalization program. Human observation and electronic reporting tools account for all catch of these species. Computer programs match the catch against individual species quotas (quota pounds or QP) or coop allocations. All vessels must carry observers who watch and measure the harvests and discards of these groundfish. All shore plants must have catch monitors to watch all vessel offloads and record the species and amounts landed. In the Shorebased IFQ Program, online accounting programs issue and track QS, QP, and catch by species. Computer programs compare fish tickets to catch monitor reports and calculate the QP landed by an individual vessel. Observer reports are used to account for the vessel's discards. An online ''banking system'' is used to debit landings and discards against the vessel's QP. Quota pounds are deposited to a vessel's account based on a transfer from a QS account or from another vessel account.

The following provides some perspective on the economic dimensions of the fisheries. Over the years 2007 through 2010, according to Council estimates, shorebased ex-vessel revenues have averaged $38 million, the mothership sector $8 million, and the catcher-processor sector $12 million (*http://www.pcouncil.org/groundfish/background/document-library/historical-landings-and-revenue-in-groundfish-fisheries/*, Tables 22 and 28). Based on PacFIN data and on NMFS at-sea whiting data, in 2011 shorebased revenues increased $54 million, the mothership revenues are about $12 million, and the catcher-processor revenues are about $17 million. (Note: Ex-vessel revenues are just one indicator of ''revenue.'' They understate the wholesale, export, and retail revenues earned from the fishery. Data on these other indicators is either incomplete or unavailable.)

The cost recovery program applies to three groups of trawlers. Some trawlers deliver to shore-based processing plants. Other trawlers deliver to mothership processors. Some trawlers are catcher-processors—vessels that both trawl and process fish. In January 2011, NMFS and the Council set up a new management program called the trawl

rationalization program. This program significantly changes how two of these groups work. Shore-based trawlers now fish under their own set of individual species quotas by vessel. In prior years, there were different rules for shore-based trawlers depending on their target catch. Nonwhiting trawlers fished under common trip limits while whiting trawlers fished under a common quota without trip limits. In prior years, the mothership fishery consisted of independent at-sea processors each receiving catch from several trawlers. Now the mothership fishery works as a coop where catcher-vessels and motherships work together collectively. The catcher-processor fleet continues as a single coop, but now has a permit to do so.

Cost recovery for the trawl rationalization program requires the fish sellers to pay the fee and all parties making the first ex-vessel purchase of groundfish (i.e., the fish buyers) to collect the fee, account for, and forward the fee revenue to NMFS (Note: In the C/P Coop Program, a cooperative of vessels that both harvest and process whiting at-sea, the fish seller and the fish buyer are the same entity).

The Small Business Administration has established size criteria for all major industry sectors in the US, including fish harvesting and fish processing businesses. A business involved in fish harvesting is a small business if it is independently owned and operated and not dominant in its field of operation (including its affiliates) and if it has combined annual receipts not in excess of $4.0 million for all its affiliated operations worldwide. A seafood processor is a small business if it is independently owned and operated, not dominant in its field of operation, and employs 500 or fewer persons on a fulltime, part-time, temporary, or other basis, at all its affiliated operations worldwide. A business involved in both the harvesting and processing of seafood products is a small business if it meets the $4.0 million criterion for fish harvesting operations. A wholesale business servicing the fishing industry is a small business if it employs 100 or fewer persons on a full-time, part-time, temporary, or other basis, at all its affiliated operations worldwide. For marinas and charter/party boats, a small business is one with annual receipts not in excess of $7.0 million.

This rule directly affects vessel owners and first receivers who are responsible for the submission of electronic fish tickets, the catcher vessels and processors associated with the mothership coop, and the catcher-processors that are members of the catcher-processor coop. Each account holder, mothership catcher vessel, mothership processor, and catcher-processor must apply to participate in the trawl rationalization program. As part of the application process, applicants were asked if they considered themselves a ''small'' business. NMFS makes the following conclusions based on these responses. For the few non-respondents, NMFS relied on other information to assess their size. The Shorebased IFQ Program affects 144 vessel account holders (fish sellers) and 51 first receivers (fish buyers). There are 117 ''small'' vessel account holders and 30 ''small'' first receivers. The mothership sector involves 36 MS/CV-endorsed permits (fish sellers) and 6 MS permits (fish buyers). (Note that one of the MS/CV-endorsed permits has two endorsements). Twenty-one MS/CV-endorsed permits and two MS permits are considered small businesses. There are 10 C/P permits (fish buyer and seller). Of these, eight indicated they were large businesses and NMFS assumes the other two are also large businesses based on knowledge of operations off Alaska. The sum total of these permits and vessel accounts is 247, with 170 considered small.

The impacts on both small and large entities are the fees being collected—up to three percent of ex-vessel revenues or the mothership and catch processor equivalents discussed above. Because cost recovery is mandatory under the MSA, the ''no action'' alternative is not a viable alternative. All of the other alternatives would have the same expected effects among each other because the MSA requires fees of up to three percent of the ex-vessel value to be collected. Implementation costs were reduced by adapting the existing buyback fee collection processes and by adjusting these processes to each sector.

Other than raising the costs of operation, the total effects of this program are hard to assess. This program is for the long term while the fishery has yet to adjust in the short term to the program because of the prohibition on QS trading. While the cost recovery fees may be affordable for the average fisherman, for other fishermen the cost recovery fee may not be affordable given the other costs they incur. Many fishermen, particularly shorebased fishermen, have voiced concerns that paying for costs of state landing taxes, the buyback fees, the costs of observers, and cost recovery fees will be challenging. The Northwest Fisheries Science Center (NWFSC) has recently developed estimates of net accounting profits by trawl permits involved in the shoreside fishery including those that operate in at sea fisheries but excluding catcher-processors and mothership catcher vessels that do not also deliver to shoreplants. In the calculation of accounting net revenue, costs include trawl buyback fees and landings taxes. Economic net revenue also considers the opportunity costs incurred by vessel owners who serve as captain but do not pay themselves for their captain services, and the opportunity cost of capital. NWFSC estimates that the average limited entry groundfish trawl fleet member earned accounting net revenue of $115,983 and economic net revenue of $77,381 during 2008 from operations in all fisheries. During 2008, the average limited entry groundfish trawl survey respondent earned $585,048 from all revenue sources and $339,504 from operations in the West Coast groundfish fishery. The 127 vessels in the West Coast limited entry groundfish trawl survey population during 2008 earned accounting net revenue of $14,729,841 and economic net revenue of $9,827,387 from operations in all fisheries.

While NMFS has not yet calculated the actual fee percent for the upcoming year, preliminary estimates show that NMFS expects the Shorebased IFQ Program to be subject to the maximum three percent fee. The MS and C/P Coop Program are expected to cost NMFS less money for management, data collection, and enforcement and, therefore, be subject to less than the three percent fee. Using a fee rate of three percent and 2011 revenues, for the Shorebased IFQ Program, NMFS would collect approximately $1.62 million ($54 million × 0.03). For the MS Coop Program, NMFS would collect approximately $360,000 (($12 million × 0.03). For the C/P Coop Program, NMFS would collect approximately $510,000 (($17 million × 0.03). Using this example, NMFS would recover approximately $2.5 million by implementing cost recovery.

Fishermen have been paying state landing taxes for years. The buyback fees, on the other hand, are associated with a reduction of the fleet that has significantly increased the amount of fish that the post buyback fishermen were able to harvest under the trip limit regime (prior to trawl rationalization) or received as QS that fishermen now receive under trawl rationalization. (Buyback history was equally divided among all shorebased groundfish permits.) Fishermen are now petitioning Congress for a reduction in the interest rate associated with the $36 million buyback loan. While the costs of

observers may be high, NMFS and the Council are looking at the feasibility of electronic monitoring to lower administrative and fishermen costs. The costs of paying the cost recovery fees can be reduced by developing a lower cost administrative system or by increased revenues as fishermen develop techniques to reduce bycatch so they can increase their target catch. The effects of all factors on current and future individual and industry profits are hard to assess, particularly as QS trading is not allowed until 2014. When QS trading is initiated, it is expected that the number of participants in the Shorebased IFQ Program will be reduced. A reduction in the number of participants may lower administrative costs while raising average revenues per participant.

We do not believe that this rule will have a significant impact when comparing small versus large businesses in terms of disproportionality and profitability given available information. Nonetheless, NMFS has prepared this IRFA. Through the rulemaking process associated with this action, we are requesting comments on this conclusion.

No Federal rules have been identified that duplicate, overlap, or conflict with the alternatives. Public comment is hereby solicited, identifying such rules. A copy of this analysis is available from NMFS (see **ADDRESSES**).

NMFS issued Biological Opinions under the Endangered Species Act (ESA) on August 10, 1990, November 26, 1991, August 28, 1992, September 27, 1993, May 14, 1996, and December 15, 1999 pertaining to the effects of the Groundfish FMP fisheries on Chinook salmon (Puget Sound, Snake River spring/summer, Snake River fall, upper Columbia River spring, lower Columbia River, upper Willamette River, Sacramento River winter, Central Valley spring, California coastal), coho salmon (Central California coastal, southern Oregon/northern California coastal), chum salmon (Hood Canal summer, Columbia River), sockeye salmon (Snake River, Ozette Lake), and steelhead (upper, middle and lower Columbia River, Snake River Basin, upper Willamette River, central California coast, California Central Valley, south/central California, northern California, southern California). These biological opinions have concluded that implementation of the FMP is not expected to jeopardize the continued existence of any endangered or threatened species under the jurisdiction of NMFS, or result in the destruction or adverse modification of critical habitat.

NMFS issued a Supplemental Biological Opinion on March 11, 2006 concluding that neither the higher observed bycatch of Chinook in the 2005 whiting fishery nor new data regarding salmon bycatch in the groundfish bottom trawl fishery required a reconsideration of its prior ''no jeopardy'' conclusion. NMFS also reaffirmed its prior determination that implementation of the FMP is not likely to jeopardize the continued existence of any of the affected ESUs. Lower Columbia River coho (70 FR 37160, June 28, 2005) and Oregon Coastal coho (73 FR 7816, February 11, 2008) were recently relisted as threatened under the ESA. The 1999 biological opinion concluded that the bycatch of salmonids in the Pacific whiting fishery were almost entirely Chinook salmon, with little or no bycatch of coho, chum, sockeye, and steelhead.

On December 7, 2012, NMFS completed a biological opinion concluding that the groundfish fishery is not likely to jeopardize non-salmonid marine species including listed eulachon, green sturgeon, humpback whales, Steller sea lions, and leatherback sea turtles. The opinion also concludes that the fishery is not likely to adversely modify critical habitat for green sturgeon and leatherback sea turtles. An analysis included in the same document as the opinion concludes that the fishery is not likely to adversely affect green sea turtles, olive ridley sea turtles, loggerhead sea turtles, sei whales, North Pacific right whales, blue whales, fin whales, sperm whales, Southern Resident killer whales, Guadalupe fur seals, or the critical habitat for Steller sea lions.

As Steller sea lions and humpback whales are also protected under the Marine Mammal Protection Act (MMPA), incidental take of these species from the groundfish fishery must be addressed under MMPA section 101(a)(5)(E). West coast pot fisheries for sablefish are considered Category II fisheries under the MMPA's List of Fisheries, indicating occasional interactions. All other west coast groundfish fisheries, including the trawl fishery, are considered Category III fisheries under the MMPA, indicating a remote likelihood of or no known serious injuries or mortalities to marine mammals. On February 27, 2012, NMFS published notice that the incidental taking of Steller sea lions in the West Coast groundfish fisheries is addressed in NMFS' December 29, 2010 Negligible Impact Determination (NID) and this fishery has been added to the list of fisheries authorized to take Steller sea lions. 77 FR 11493 (Feb. 27, 2012). NMFS is currently developing MMPA authorization for the incidental take of humpback whales in the fishery.

On November 21, 2012, the U.S. Fish and Wildlife Service (FWS) issued a biological opinion concluding that the groundfish fishery will not jeopardize the continued existence of the short-tailed albatross. The FWS also concurred that the fishery is not likely to adversely affect the marbled murrelet, California least tern, southern sea otter, bull trout, nor bull trout critical habitat.

This proposed rule contains a collection-of-information requirement subject to review and approval by OMB under the Paperwork Reduction Act (PRA). This requirement has been submitted to OMB for approval. Public reporting burden for the cost recovery form is estimated to average 1 hour per response, including the time for reviewing instructions, searching existing data sources, gathering and maintaining the data needed, and completing and reviewing the collection of information. Public reporting burden for a failure to pay report is estimated to average 4 hours per response, including the time for reviewing instructions, searching existing data sources, gathering and maintaining the data needed, and completing and reviewing the collection of information. Public reporting burden for the annual report for the at-sea sector is estimated to average 1 hour per response, including the time for reviewing instructions, searching existing data sources, gathering and maintaining the data needed, and completing and reviewing the collection of information.

Public comment is sought regarding: Whether this proposed collection of information is necessary for the proper performance of the functions of the agency, including whether the information shall have practical utility; the accuracy of the burden estimate; ways to enhance the quality, utility, and clarity of the information to be collected; and ways to minimize the burden of the collection of information, including through the use of automated collection techniques or other forms of information technology. Send comments on these or any other aspects of the collection of information to NMFS, Northwest Region at the **ADDRESSES** above, and email to *OIRA_Submission@omb.eop.gov,* or fax to (202) 395–7285.

Notwithstanding any other provision of the law, no person is required to respond to, nor shall any person be subject to a penalty for failure to comply with, a collection of information subject to the requirements of the PRA, unless

that collection of information displays a currently valid OMB Control Number.

This proposed rule was developed after meaningful collaboration, through the Council process, with the tribal representative on the Council. The proposed regulations have no direct effect on the tribes; these proposed regulations were deemed by the Council as ''necessary or appropriate'' to implement the FMP as amended.

List of Subjects in 50 CFR Part 660

Fisheries, Fishing, and Indian fisheries.

Dated: January 25, 2013.

Alan D. Risenhoover,

Director, Office of Sustainable Fisheries, performing the functions and duties of the Deputy Assistant Administrator for Regulatory Programs, National Marine Fisheries Service.

For the reasons stated in the preamble, 50 CFR Chapter VI is proposed to be amended as follows:

50 CFR Chapter VI

PART 660—FISHERIES OFF WEST COAST STATES

■ 1. The authority citation for part 660 continues to read as follows:

Authority: 16 U.S.C. 1801 *et seq.,* 16 U.S.C. 773 *et seq.,* and 16 U.S.C. 7001 *et seq.*

■ 2. In § 660.11, add the definition for ''fiscal year'' and ''fund'' in alphabetical order to read as follows:

§ 660.11 General definitions.

* * * * *

Fiscal year means the year beginning at 0001 local time on October 1 and ending at 2400 local time on September 30 of the following year.

* * * * *

Fund means, for the purposes of subparts C through G of this part, the U.S. Treasury's Limited Access System Administration Fund (LASAF) established by the Magnuson-Stevens Act, 16 U.S.C. 1855(h)(5)(B), specifically the LASAF subaccounts associated with the PCGFMP cost recovery programs.

* * * * *

■ 3. In § 660.25, add paragraph (b)(4)(i)(G) to read as follows:

§ 660.25 Permits.

* * * * *

(b) * * *

(4) * * *

(i) * * *

(G) An MS permit or a limited entry permit with a C/P endorsement will not be renewed, if it was the permit owner that failed to pay, until payment of all cost recovery program fees required pursuant to § 660.115 has been made. The IAD, appeals, and final decision process for the cost recovery program is specified at § 660.115(d)(3)(ii).

* * * * *

■ 4. In § 660.111, add the definitions for ''ex-vessel value,'' ''fish buyer,'' ''fish seller,'' and ''net ex-vessel value'' in alphabetical order to read as follows:

§ 660.111 Trawl fishery—definitions.

* * * * *

Ex-vessel value means, for the purposes of the cost recovery program specified at § 660.115, all compensation (based on an arm's length transaction between a buyer and seller) that a fish buyer pays to a fish seller in exchange for groundfish species (as defined in § 660.11), and includes the value of all in-kind compensation and all other goods or services exchanged in lieu of cash. Ex-vessel value shall be determined before any deductions are made for transferred or leased allocation, or for any goods for services.

(1) For the Shorebased IFQ Program, the value of all groundfish species (as defined in § 660.11) from IFQ landings.

(2) For the MS Coop Program, the value of all groundfish species (as defined in § 660.11) delivered by a catcher vessel to an MS-permitted vessel.

(3) For the C/P Coop Program, the value as determined by the aggregate pounds of all groundfish species (as defined in § 660.11) harvested by the vessel registered to a C/P-endorsed limited entry trawl permit, multiplied by the MS Coop Program average price per pound as announced pursuant to § 660.115(b)(2).

* * * * *

Fish buyer means, for the purposes of the cost recovery program specified at § 660.115,

(1) For the Shorebased IFQ Program, the IFQ first receiver as defined in § 660.111.

(2) For the MS Coop Program, the owner of a vessel registered to an MS permit, the operator of a vessel registered to an MS permit, and the owner of the MS permit registered to that vessel. All three parties shall be jointly and severally responsible for fulfilling the obligations of a fish buyer.

(3) For the C/P Coop Program, the owner of a vessel registered to a C/P-endorsed limited entry trawl permit, the operator of a vessel registered to a C/P-endorsed limited entry trawl permit, and the owner of the C/P-endorsed limited entry trawl permit registered to that vessel. All three parties shall be jointly and severally responsible for fulfilling the obligations of a fish buyer.

Fish seller means the party who harvests and first sells or otherwise delivers groundfish species (as defined in § 660.11) to a fish buyer.

* * * * *

Net ex-vessel value means, for the purposes of the cost recovery program specified at § 660.115, the ex-vessel value minus the cost recovery fee.

* * * * *

■ 5. In § 660.112, add paragraph (a)(6) to read as follows:

§ 660.112 Trawl fishery—prohibitions.

* * * * *

(a) * * *

(6) *Cost recovery program.* (i) Fail to fully pay or collect any fee due under the cost recovery program specified at § 660.115 and/or otherwise avoid, decrease, interfere with, hinder, or delay any such payment or collection.

(ii) Convert, or otherwise use any paid or collected fee for any purpose other than the purposes specified in this subpart.

(iii) Fail to deposit on time the full amount of all fee revenue collected under the cost recovery program specified at § 660.115 into a deposit account, or fail to timely disburse the full amount of all deposit principal to the Fund.

(iv) Fail to maintain records as required by § 660.113 and/or fail to make reports to NMFS as required under § 660.113.

(v) Fail to advise NMFS of any fish buyer's failure to collect any fee due and payable under the cost recovery program specified at § 660.115.

(vi) Refuse to allow NMFS employees, agents, or contractors to review and audit all records and other information required to be maintained as set forth in § 660.113, and/or § 660.115.

(vii) Make any false statement to NMFS, including any NMFS employee, agent or contractor, concerning a matter related to the cost recovery program described in this subpart.

(viii) Obstruct, prevent, or delay, or attempt to obstruct, prevent, or delay, any audit or investigation NMFS employees, agents, or contractors conduct, or attempt to conduct, in connection with any of the matters in the cost recovery program described in this subpart.

* * * * *

■ 6. In § 660.113, add paragraphs (b)(5), (c)(5), and (d)(5) to read as follows:

§ 660.113 Trawl fishery—recordkeeping and reporting.

* * * * *

(b) * * *

(5) *Cost recovery program.* In addition to the requirements at paragraph (a) of this section, the fish buyer, as defined at § 660.111 for the Shorebased IFQ

Program, is required to comply with the following recordkeeping and reporting requirements:

(i) *Reporting.* The fish buyer must submit a cost recovery form at the time cost recovery fees are paid to NMFS as specified at § 660.115. The cost recovery form requires providing information that includes, but is not limited to, fee collector's name, address, phone number, state buyer code, month and year of landings, weight of landings, ex-vessel value, and fee collected.

(ii) *Recordkeeping.* The fish buyer must maintain the following records:

(A) For all deliveries of groundfish that the fish buyer buys from each fish seller:

(*1*) The date of delivery,

(*2*) The fish seller's identity,

(*3*) The weight of each species of groundfish delivered,

(*4*) Information sufficient to specifically identify the fishing vessel which delivered the groundfish,

(*5*) The ex-vessel value of each species of groundfish,

(*6*) The net ex-vessel value of each species of groundfish,

(*7*) The identity of the payee to whom the net ex-vessel value is paid, if different than the fish seller,

(*8*) The date the net ex-vessel value was paid,

(*9*) The total fee amount collected as a result of all groundfish.

(B) For all fee collection deposits to and disbursements from the deposit account:

(*1*) The date of each deposit in to the deposit account required at § 660.115(d)(1)(ii)(A),

(*2*) The total amount deposited in to the deposit account,

(*3*) The date of each disbursement,

(*4*) The total amount disbursed,

(*5*) The dates and amounts of disbursements to the fish buyer, or other parties, of interest earned on deposits.

* * * * *

(c) * * *

(5) *Cost recovery program.* In addition to the requirements at paragraph (a) of this section, the fish buyer, as defined at § 660.111 for the MS Coop Program, is required to comply with the following recordkeeping and reporting requirements:

(i) *Reporting.* (A) The fish buyer must submit a cost recovery form at the time cost recovery fees are paid to NMFS as specified at § 660.115. The cost recovery form requires providing information that includes, but is not limited to, fee collector's name, address, phone number, USCG vessel documentation number, month and year of deliveries, weight of deliveries, ex-vessel value, and fee collected.

(B) *Annual report.* By March 31 each year, each fish buyer must submit to NMFS a report containing the following information from the preceding calendar year for all groundfish each fish buyer purchases from fish sellers:

(*1*) Total weight bought,

(*2*) Total ex-vessel value paid,

(*3*) Total fee amounts collected,

(*4*) Total fee collection amounts deposited by month,

(*5*) Dates and amounts of monthly disbursements to the Fund.

(ii) *Recordkeeping.* The fish buyer must maintain the following records:

(A) For all deliveries of groundfish that the fish buyer buys from each fish seller:

(*1*) The date of delivery,

(*2*) The fish seller's identity,

(*3*) The weight of each species of groundfish delivered,

(*4*) Information sufficient to specifically identify the fishing vessel which delivered the groundfish,

(*5*) The ex-vessel value of each species of groundfish,

(*6*) The net ex-vessel value of each species of groundfish,

(*7*) The identity of the payee to whom the net ex-vessel value is paid, if different than the fish seller,

(*8*) The date the net ex-vessel value was paid,

(*9*) The total fee amount collected as a result of all groundfish.

(B) For all fee collection deposits to and disbursements from the deposit account:

(*1*) The date of each deposit in to the deposit account required at § 660.115(d)(1)(ii)(A),

(*2*) The total amount deposited in to the deposit account,

(*3*) The date of each disbursement,

(*4*) The total amount disbursed,

(*5*) The dates and amounts of disbursements to the fish buyer, or other parties, of interest earned on deposits.

* * * * *

(d) * * *

(5) *Cost recovery program.* In addition to the requirements at paragraph (a) of this section, the fish buyer, as defined at § 660.111 for the C/P Coop Program, is required to comply with the following recordkeeping and reporting requirements:

(i) *Reporting.* (A) The fish buyer must submit a cost recovery form at the time cost recovery fees are paid to NMFS as specified at § 660.115. The cost recovery form requires providing information that includes, but is not limited to, fee collector's name, address, phone number, USCG vessel documentation number, month and year of deliveries, weight of deliveries, ex-vessel value, and fee collected.

(B) *Annual report.* By March 31 each year, each fish buyer must submit to NMFS a report containing the following information from the preceding calendar year for all groundfish:

(*1*) Total weight,

(*2*) Total ex-vessel value paid (based on MS pricing),

(*3*) Total fee amount collected,

(*4*) Date and amount of the disbursement to the Fund.

(ii) *Recordkeeping.* The fish buyer must maintain the following records:

(A) For all groundfish:

(*1*) The date of harvest,

(*2*) The weight of each species of groundfish harvested,

(*3*) Information sufficient to specifically identify the fishing vessel which harvested the groundfish,

(*4*) The ex-vessel value of each species of groundfish,

(*5*) The net ex-vessel value of each species of groundfish,

(*6*) The total fee amount collected as a result of all groundfish.

(B) For all disbursements to NMFS:

(*1*) The date of each disbursement,

(*2*) The total amount disbursed.

■ 7. Section 660.115 is added to read as follows:

§ 660.115 Trawl fishery—cost recovery program.

(a) *General.* The cost recovery program collects mandatory fees of up to three percent of the ex-vessel value of fish harvested by sector under the trawl rationalization program in accordance with the Magnuson-Stevens Act. NMFS collects the fees to recover the actual costs directly related to the management, data collection, and enforcement of the trawl rationalization program. In addition to the requirements of this section, the following groundfish regulations also apply:

(1) Regulations set out in the following sections of subpart C: § 660.11 Definitions and § 660.25 Permits.

(2) Regulations set out in the following sections of subpart D: § 660.111 Definitions, § 660.112 Trawl fishery prohibitions, § 660.113 Trawl fishery recordkeeping and reporting, § 660.140 Shorebased IFQ Program, § 660.150 MS Coop Program, and § 660.160 C/P Coop Program.

(b) *Fee percentage by sector.* The annual fee percentage by sector is calculated as described in paragraph (b)(1) of this section. NMFS will establish the fee percentage each year and will announce the fee percentage by sector in accordance with paragraph (b)(2) of this section. The fee percentage must not exceed three percent of the ex-vessel value of fish harvested by sector

under the trawl rationalization program pursuant to the Magnuson-Stevens Act at 16 U.S.C. 1854(d)(2)(B).

(1) *Calculation.* In the last quarter of each calendar year, NMFS will calculate the fee percentage by sector based on information from the previous fiscal year (defined at § 660.11). The fee percentage will be rounded to the nearest 0.1 percent and must not exceed three percent for each sector (Shorebased IFQ Program, MS Coop Program, and C/P Coop Program). NMFS will use the following equation to annually determine the fee percentage by sector: Fee percentage = the lower of 3% or (DPC/V) × 100, where:

(i) ''DPC,'' or direct program costs, are the actual incremental costs for the previous fiscal year directly related to the management, data collection, and enforcement of each sector (Shorebased IFQ Program, MS Coop Program, and C/P Coop Program). Actual incremental costs means those net costs that would not have been incurred but for the implementation of the trawl rationalization program, including additional costs for new requirements of the program and reduced trawl sector related costs resulting from efficiencies as a result of the program. If the amount of fees collected by NMFS is greater or less than the actual net incremental costs incurred, the DPC will be adjusted accordingly for calculation of the fee percentage in the following year.

(ii) ''V'' is, for each applicable sector, the total ex-vessel value, as defined at § 660.111, from the previous fiscal year attributable to that sector of the trawl rationalization program (Shorebased IFQ Program, MS Coop Program, and C/P Coop Program).

(2) *Notification of the fee percentage and MS average pricing.* During the last quarter of each calendar year, NMFS will announce the following through a **Federal Register** notice:

(i) The fee percentage to be applied by fish buyers and fish sellers, for each sector, that will be in effect for the upcoming calendar year, and

(ii) The average MS price per pound from the previous fiscal year as reported for the MS Coop Program to be used in the C/P Coop Program to calculate the fee amount for the upcoming calendar year as specified in paragraph (c) of this section.

(iii) Information on how to pay in to the Fund subaccount as specified at paragraph (d) of this section.

(c) *Fee amount.* The fee amount is the ex-vessel value, as defined at § 660.111, for each sector multiplied by the fee percentage for that sector as announced in accordance with paragraph (b)(2) of this section.

(d) *Fee payment and collection*—(1) *Fee payment and collection in the Shorebased IFQ Program and MS Coop Program.* Payment of fees at the fee percentage rate announced in paragraph (b)(2) of this section begins January 1 and continues without interruption through December 31 each year.

(i) *Between the fish seller and fish buyer.* Except as described below, the full fee is due and payable at the time of fish landing/delivery. Each fish buyer must collect the fee at the time of fish landing/delivery by deducting the fee from the ex-vessel value before paying the net ex-vessel value to the fish seller. Each fish seller must pay the fee at the time of fish landing/delivery by receiving from the fish buyer the net ex-vessel value, as defined at § 660.111.

(A) In the event of any post-delivery payment for fish, the fish seller must pay, and the fish buyer must collect, at the time the amount of such post-landing/delivery payment, the fee that would otherwise have been due and payable at the time of initial fish landing/delivery.

(B) When the fish buyer and fish seller are the same entity, that entity must comply with the requirements for both the fish seller and the fish buyer as specified in this section.

(ii) *Between the fish buyer and NMFS*—(A) *Deposit accounts.* Each fish buyer shall maintain a segregated account at a federally insured financial institution for the sole purpose of depositing collected fee revenue from the cost recovery program specified in this section and disbursing the deposit principal directly to NMFS in accordance with paragraph (d)(1)(ii)(C) of this section.

(B) *Fee collection deposits.* Each fish buyer, no less frequently than at the end of each month, shall deposit, in the deposit account established under paragraph (d)(1)(ii)(A) of this section, all fees collected, not previously deposited, that the fish buyer collects through a date not more than two calendar days before the date of deposit. The deposit principal may not be pledged, assigned, or used for any purpose other than aggregating collected fee revenue for disbursement to the Fund in accordance with paragraph (d)(1)(ii)(C) of this section. The fish buyer is entitled, at any time, to withdraw deposit interest, if any, but never deposit principal, from the deposit account for the fish buyer's own use and purposes.

(C) *Deposit principal disbursement.* Not later than the 14th calendar day after the last calendar day of each month, or more frequently if the amount in the account exceeds the account limit for insurance purposes, the fish buyer shall disburse to NMFS the full deposit principal then in the deposit account. The fish buyer shall disburse deposit principal by electronic payment to the Fund subaccount to which the deposit principal relates. NMFS will announce information about how to make an electronic payment to the Fund subaccount in the notification on fee percentage specified in paragraph (b)(2) of this section. Each disbursement must be accompanied by a cost recovery form provided by NMFS. Recordkeeping and reporting requirements are specified in paragraph (d)(4) of this section and at § 660.113(b)(5) for the Shorebased IFQ Program and § 660.113(c)(5) for the MS Coop Program. The cost recovery form will be available on the pay.gov Web site.

(2) *Fee payment and collection in the C/P Coop Program.* Payment of fees for the calendar year at the fee percentage rate announced in paragraph (b)(2) of this section is due in the last quarter of the calendar year and no later than December 31 each year. The fish buyer is responsible for fee payment to NMFS. The fish seller and the fish buyer, as defined at § 660.111, are considered the same entity in the C/P Coop Program. The fish buyer shall disburse to NMFS the full fee amount for the calendar year by electronic payment to the Fund subaccount. NMFS will announce information about how to make an electronic payment to the Fund subaccount in the notification on fee percentage specified in paragraph (b)(2) of this section. Each disbursement must be accompanied by a cost recovery form provided by NMFS. Recordkeeping and reporting requirements are specified in paragraph (d)(4) of this section and at § 660.113(d)(5) for the C/P Coop Program. The cost recovery form will be available on the pay.gov Web site.

(3) *Failure to pay or collect*—(i) *Responsibility to notify NMFS.* (A) If a fish buyer fails to collect the fee in the amount and manner required by this section, the fish seller shall then advise the fish buyer of the fish seller's fee payment obligation and of the fish buyer's cost recovery fee collection obligation. If the fish buyer still fails to properly collect the fee, the fish seller, within the next 7 calendar days, shall forward the fee to NMFS. The fish seller at the same time shall also advise NMFS in writing at the address in paragraph (d)(3)(i)(C) of this section of the full particulars, including:

(*1*) The fish buyer's and fish seller's name, address, and telephone number,

(*2*) The name of the fishing vessel from which the fish seller made fish delivery and the date of doing so,

(*3*) The weight and ex-vessel value of each species of fish that the fish seller delivered, and

(*4*) The fish buyer's reason, if known, for refusing to collect the fee in accordance with this subpart;

(B) Notifications must be mailed or faxed to: National Marine Fisheries Service, Northwest Region, Office of Management and Information, ATTN: Cost Recovery Notification, 7600 Sand Point Way NE., Seattle, WA 98115; Fax: 206–526–6426; or delivered to National Marine Fisheries Service at the same address.

(ii) *IAD, appeals, and final decision.* If NMFS determines the fish buyer or other responsible party has not submitted a complete cost recovery form and corresponding payment by the due date specified in paragraphs (d)(1) and (d)(2) of this section, NMFS will at any time thereafter notify the fish buyer or other responsible party in writing via an initial administrative determination (IAD) letter.

(A) *IAD.* In the IAD, NMFS will state the discrepancy and provide the person 30 calendar days to either pay the specified amount due or appeal the IAD in writing.

(B) *Appeals.* If the fish buyer appeals an IAD, the appeal must be postmarked, faxed, or hand delivered to NMFS no later than 30 calendar days after the date on the IAD. If the last day of the time period is a Saturday, Sunday, or Federal holiday, the time period will extend to the close of business on the next business day. The appeal must be in writing, must allege credible facts or circumstances, and must include any relevant information or documentation to support the appeal. Appeals must be mailed, faxed, or hand-delivered to: National Marine Fisheries Service, Northwest Region, Office of Management and Information, ATTN: Cost Recovery Appeals, 7600 Sand Point Way NE., Seattle, WA 98115; Fax: 206–526–6426; or delivered to National Marine Fisheries Service at the same address.

(C) *Final decision*—(*1*) *Final decision on appeal.* For the appeal of an IAD, the Regional Administrator shall appoint an appeals officer. After determining there is sufficient information and that all procedural requirements have been met, the appeals officer will review the record and issue a recommendation on the appeal to the Regional Administrator, which shall be advisory only. The recommendation must be based solely on the record. Upon receiving the findings and recommendation, the Regional Administrator, acting on behalf of the Secretary of Commerce, will issue a written decision on the appeal which is the final decision of the Secretary of Commerce.

(*2*) *Final decision if there is no appeal.* If the fish buyer does not appeal the IAD within 30 calendar days, NMFS will notify the fish buyer or other responsible party in writing via a final decision letter. The final decision will be from the Regional Administrator acting on behalf of the Secretary of Commerce.

(*3*) *If the final decision determines that the fish buyer is out of compliance,* the final decision will require payment within 30 calendar days. If such payment is not received within 30 calendar days of issuance of the final decision, NMFS will refer the matter to the appropriate authorities for purposes of collection. As of the date of the final decision if the fish buyer is out of compliance, NMFS will not approve a permit renewal for an MS permit or a C/P-endorsed limited entry trawl permit until all cost recovery fees due have been paid as specified at § 660.25(b)(4)(i)(G); or reissue an IFQ first receiver site license until all cost recovery fees due have been paid, as specified at § 660.140(f)(4).

(4) *Recordkeeping, reporting, and audits*—(i) *Recordkeeping.* Each fish buyer and fish seller shall retain records in accordance with § 660.113(a). In addition, fish buyers shall retain records in accordance with the following paragraphs: § 660.113(b)(5) for the Shorebased IFQ Program, § 660.113(c)(5) for the MS Coop Program, and § 660.113(d)(5) for the C/P Coop Program.

(ii) *Reporting, including annual report.* Each fish buyer shall submit reports in accordance with the following paragraphs: § 660.113(b)(5) for the Shorebased IFQ Program, § 660.113(c)(5) for the MS Coop Program, and § 660.113(d)(5) for the C/P Coop Program. The fish buyer must submit a cost recovery form along with fee payment to NMFS. By March 31 each year, fish buyers in the MS and C/P Coop Programs must submit an annual report to NMFS containing information from the preceding calendar year as specified at § 660.113(c)(5) and § 660.113(d)(5) for the MS and C/P Coop Programs, respectively.

(iii) *Audits.* NMFS or its agents may audit, in whatever manner NMFS determines reasonably necessary for the duly diligent administration of the cost recovery program, the financial records of fish buyers and fish sellers in order to ensure proper fee payment, collection, deposit, disbursement, accounting, recordkeeping, and reporting. Fish buyers and fish sellers must respond to any inquiry by NMFS or a NMFS agent within 20 calendar days of the date of issuance of the inquiry, unless an extension is granted by NMFS. Fish buyers and fish sellers shall make all relevant records available to NMFS or NMFS' agents at reasonable times and places and promptly provide all requested information reasonably related to these records. NMFS may employ a third party agent to conduct the audits. The NMFS auditor may review and request copies of additional data provided by the submitter, including but not limited to, previously audited or reviewed financial statements, worksheets, tax returns, invoices, receipts, and other original documents substantiating the data submitted.

■ 8. In § 660.140,

■ a. Revise paragraphs (a)(2), (e)(8), (f)(4), and (f)(6);

■ b. Add paragraphs (b)(1)(x), (b)(2)(ix), and (f)(10) to read as follows:

§ 660.140 Shorebased IFQ Program.

* * * * *

(a) * * *

(2) Regulations set out in the following sections of subpart D: § 660.111 Trawl fishery definitions, § 660.112 Trawl fishery prohibitions, § 660.113 Trawl fishery recordkeeping and reporting, § 660.115 Trawl fishery cost recovery program, § 660.120 Trawl fishery crossover provisions, § 660.130 Trawl fishery management measures, and § 660.131 Pacific whiting fishery management measures.

* * * * *

(b) * * *

(1) * * *

(x) Fish sellers must pay cost recovery program fees, as specified at § 660.115.

(2) * * *

(ix) Collect and remit to NMFS cost recovery program fees, as specified at § 660.115.

* * * * *

(e) * * *

(8) *Cost recovery.* The fish seller, as defined at § 660.111, is subject to the cost recovery program specified at § 660.115.

* * * * *

(f) * * *

(4) *Initial administrative determination.* For all complete applications, NMFS will issue an IAD that either approves or disapproves the application. If approved, the IAD will include a first receiver site license. If disapproved, the IAD will provide the reasons for this determination. NMFS will not reissue a first receiver site license until the required cost recovery program fees, as specified at § 660.115,

have been paid. The IAD, appeals, and final decision process for the cost recovery program is specified at § 660.115(d)(3)(ii).

* * * * *

(6) *Reissuance in subsequent years.* Existing license holders must reapply annually. If the existing license holder fails to reapply, the first receiver's site license will expire as specified in paragraph (f)(5) of this section. The IFQ first receiver will not be authorized to receive IFQ species from a vessel if their first receiver site license has expired. NMFS will not reissue a first receiver site license until all required cost recovery program fees, as specified at § 660.115, associated with that license have been paid.

* * * * *

(10) *Cost recovery.* The first receiver site license holder is considered the fish buyer as defined at § 660.111, and must comply with the cost recovery program specified at § 660.115.

* * * * *

■ 9. In § 660.150,

■ a. Remove paragraph (d)(5);

■ b. Revise paragraphs (a)(4), (b)(1)(ii)(A), and (f)(6);

■ c. Add paragraphs (b)(1)(ii)(D), (b)(2)(ii)(C), and (g)(7) to read as follows:

§ 660.150 Mothership (MS) Coop Program.

* * * * *

(a) * * *

(4) Regulations set out in the following sections of subpart D: § 660.111 Trawl fishery definitions, § 660.112 Trawl fishery prohibitions, § 660.113 Trawl fishery recordkeeping and reporting, § 660.115 Trawl fishery cost recovery program, § 660.120 Trawl fishery crossover provisions, § 660.130 Trawl fishery management measures, and § 660.131 Pacific whiting fishery management measures.

* * * * *

(b) * * *

(1) * * *

(ii) * * *

(A) *Recordkeeping and reporting.* Maintain a valid declaration as specified at § 660.13(d); maintain records as specified at § 660.113(a); and maintain and submit all records and reports specified at § 660.113(c) including, economic data, scale tests records, cease fishing reports, and cost recovery.

* * * * *

(D) *Cost recovery program.* Collect and remit to NMFS cost recovery program fees as specified at § 660.115.

* * * * *

(2) * * *

(ii) * * *

(C) *Cost recovery program.* Vessel must pay cost recovery program fees, as specified at § 660.115.

* * * * *

(f) * * *

(6) *Cost recovery.* The owner of a vessel registered to an MS permit, the operator of a vessel registered to an MS permit, and the owner of the MS permit registered to that vessel, are considered to be the fish buyer as defined at § 660.111, and must comply with the cost recovery program specified at § 660.115.

* * * * *

(g) * * *

(7) *Cost recovery.* The fish seller, as defined at § 660.111, is subject to the cost recovery program specified at § 660.115.

* * * * *

■ 10. In § 660.160,

■ a. Remove paragraphs (d)(5) and (e)(6);

■ b. Revise paragraphs (a)(4) and (b)(1)(ii)(A); and

■ c. Add paragraphs (b)(1)(ii)(D), and (e)(5) to read as follows:

§ 660.160 Catcher/processor (C/P) Coop Program.

* * * * *

(a) * * *

(4) Regulations set out in the following sections of subpart D: § 660.111 Trawl fishery definitions, § 660.112 Trawl fishery prohibitions, § 660.113 Trawl fishery recordkeeping and reporting, § 660.115 Trawl fishery cost recovery program, § 660.120 Trawl fishery crossover provisions, § 660.130 Trawl fishery management measures, and § 660.131 Pacific whiting fishery management measures.

* * * * *

(b) * * *

(1) * * *

(ii) * * *

(A) *Recordkeeping and reporting.* Maintain a valid declaration as specified at § 660.13(d); maintain records as specified at § 660.113(a); and maintain and submit all records and reports specified at § 660.113(d) including, economic data, scale tests records, cease fishing reports, and cost recovery.

* * * * *

(D) *Cost recovery program.* Collect and remit to NMFS cost recovery program fees, as specified at § 660.115.

* * * * *

(e) * * *

(5) *Cost recovery.* The owner of a vessel registered to a C/P-endorsed limited entry trawl permit, the operator of a vessel registered to a C/P-endorsed limited entry trawl permit, and the owner of the C/P-endorsed limited entry trawl permit registered to that vessel, are considered both the fish buyer and the fish seller as defined at § 660.111, and must comply with the cost recovery program specified at § 660.115.

* * * * *

[FR Doc. 2013–02005 Filed 1–31–13; 8:45 am]

BILLING CODE 3510–22–P

DEPARTMENT OF COMMERCE

National Oceanic and Atmospheric Administration

50 CFR Part 665

RIN 0648–BA98

Western Pacific Fisheries; Fishing in the Marianas Trench, Pacific Remote Islands, and Rose Atoll Marine National Monuments

AGENCY: National Marine Fisheries Service (NMFS), National Oceanic and Atmospheric Administration (NOAA), Commerce.

ACTION: Notice of availability of fishery ecosystem plan amendments; request for comments.

SUMMARY: NMFS announces that the Western Pacific Fishery Management Council proposes to amend four fishery ecosystem plans to establish fishing requirements consistent with the Presidential proclamations that created the Marianas Trench, Pacific Remote Islands, and Rose Atoll Marine National Monuments.

DATES: NMFS must receive comments on the proposed amendments by April 2, 2013.

ADDRESSES: You may submit comments on the proposed amendments, identified by NOAA–NMFS–2012–0070, by either of the following methods:

• *Electronic Submission:* Submit all electronic public comments via the Federal e-Rulemaking Portal. Go to *www.regulations.gov/#!docketDetail;D=NOAA–NMFS–2012–0070,* click the *''Comment Now!''* icon, complete the required fields, and enter or attach your comments.

• *Mail:* Send written comments to Michael D. Tosatto, Regional Administrator, NMFS Pacific Islands Region (PIR), 1601 Kapiolani Blvd., Suite 1110, Honolulu, HI 96814–4700.

Instructions: Comments sent by any other method, to any other address or individual, or received after the end of the comment period, may not be considered by NMFS. All comments received are a part of the public record and will generally be posted for public viewing on *www.regulations.gov* without change. All personal identifying

information (e.g., name, address, etc.), confidential business information, or otherwise sensitive information submitted voluntarily by the sender will be publicly accessible. NMFS will accept anonymous comments (enter ''N/A'' in the required fields if you wish to remain anonymous), and will accept attachments to electronic comments in Microsoft Word, Excel, or Adobe PDF file formats only.

The Western Pacific Fishery Management Council (Council) prepared Amendment 3 to the Fishery Ecosystem Plan for the Mariana Archipelago, Amendment 2 to the Fishery Ecosystem Plan for the Pacific Remote Island Areas, Amendment 3 to the Fishery Ecosystem Plan for American Samoa, and Amendment 6 to the Fishery Ecosystem Plan for Pelagic Fisheries of the Western Pacific. The amendments are presented as a single document, which includes background information on this proposed rule, an environmental assessment, and a regulatory impact review. You may obtain the draft amendment document from *www.regulations.gov* or from the Council, 1164 Bishop St., Suite 1400, Honolulu, HI 96813, tel 808–522–8220, fax 808–522–8226, or from *www.wpcouncil.org.*

FOR FURTHER INFORMATION CONTACT: Bob Harman, NMFS PIR Sustainable Fisheries, tel 808–944–2200.

SUPPLEMENTARY INFORMATION: The Council and NMFS manage fisheries through fishery ecosystem plans for American Samoa, the Mariana Archipelago (Guam and the Commonwealth of the Northern Mariana Islands (CNMI)), the Pacific Remote Islands (PRI), Hawaii, and western Pacific pelagic fisheries.

In 2009, President Bush issued Presidential Proclamations that established three marine national monuments in the central and western Pacific under the authority of the Antiquities Act, as follows:

- Proclamation 8335 of January 6, 2009, ''Establishment of the Marianas Trench Marine National Monument'' (74 FR 1557, January 12, 2009).
- Proclamation 8336 of January 6, 2009, ''Establishment of the Pacific Remote Islands Marine National Monument'' (74 FR 1565, January 12, 2009).
- Proclamation 8337 of January 6, 2009, ''Establishment of the Rose Atoll Marine National Monument'' (74 FR 1577, January 12, 2009).

The proclamations recognize that it is in the public interest to preserve these submerged lands, waters, and marine resources, which are biologically diverse, contain sites of historical and scientific interest, and are essential to the long-term study of tropical marine ecosystems. For more detailed information regarding the marine resources and background for the management of the Monuments, please refer to the Proclamations, available at *www.regulations.gov.*

Among other things, the Proclamations define the Monuments' boundaries, prohibit commercial fishing, and describe the management of Monument resources. The Proclamations direct the Secretary of Commerce to take action under the Magnuson-Stevens Fishery Conservation and Management Act (Magnuson-Stevens Act) to regulate fisheries and ensure proper care and management of the monument, including allowing for traditional indigenous fishing practices.

The Council recommended incorporating the Proclamations' fishery management provisions into its fishery ecosystem plans, and recommended that NMFS establish certain provisions relating to traditional indigenous fishing practices. To manage fisheries in the monuments consistent with the Proclamations, the Council has submitted, for Secretarial review, Amendment 3 to Fishery Ecosystem Plan for the Mariana Archipelago, Amendment 2 to the Fishery Ecosystem Plan for the Pacific Remote Island Areas, Amendment 3 to the Fishery Ecosystem Plan for American Samoa, and Amendment 6 to the Fishery Ecosystem Plan for Pelagic Fisheries of the Western Pacific. The Council recommended amending the four plans to incorporate and establish fishing management provisions consistent with the proclamations, including the following:

- Identify the boundaries of the Monuments and their various management units.
- Prohibit commercial fishing in the Pacific Remote Islands and Rose Atoll Monuments, and in the Islands Unit of the Marianas Trench Monument.
- Establish management measures for non-commercial and recreational charter fishing in the Monuments, including but not limited to the following:
  - Require Federal permits and reporting for non-commercial and recreational charter fishing to aid in the monitoring of fishing activities.
  - Allow customary exchange in non-commercial fisheries in the Marianas Trench and Rose Atoll Marine National Monuments to help preserve traditional, indigenous, and cultural fishing practices.
  - Define customary exchange as the non-market exchange of marine resources between fishermen and community residents, and the residents' families and friends, for goods, services, and/or social support, for cultural, social, or religious reasons, and may include cost recovery through monetary reimbursements and other means for actual trip expenses (e.g., ice, bait, food, or fuel) that may be necessary to participate in fisheries in the western Pacific.
  - Limit the eligibility for non-commercial fishing to residents and businesses of local fishing communities for the Rose Atoll Monument and Marianas Monument Islands Unit.
  - Prohibit all fishing within 12 nm of the Pacific Remote Islands, subject to U.S. Fish & Wildlife Service authority to allow non-commercial fishing in consultation with NOAA and the Council.
  - Prohibit all fishing within 12 nm around Rose Atoll. The Council and NMFS would review this regulation after three years.
- Prohibit the conduct of commercial fishing outside the Monument and non-commercial fishing within the Monument during the same trip.

NMFS must receive any public comments on the proposed amendments by April 2, 2013 to be considered in the Secretary of Commerce's decision to approve, partially approve, or disapprove the amendments. NMFS expects to soon publish and request public comments on a proposed rule that would implement the measures recommended in the amendments.

Authority: 16 U.S.C. 1801 *et seq.*

Dated: January 28, 2013.

James P. Burgess,

Acting Deputy Director, Office of Sustainable Fisheries, National Marine Fisheries Service.

[FR Doc. 2013–02116 Filed 1–31–13; 8:45 am]

BILLING CODE 3510–22–P

Notices

Federal Register

Vol. 78, No. 22

Friday, February 1, 2013

This section of the FEDERAL REGISTER contains documents other than rules or proposed rules that are applicable to the public. Notices of hearings and investigations, committee meetings, agency decisions and rulings, delegations of authority, filing of petitions and applications and agency statements of organization and functions are examples of documents appearing in this section.

DEPARTMENT OF AGRICULTURE

Advisory Committee on Biotechnology and 21st Century Agriculture; Renewal

AGENCY: Agricultural Research Service, USDA.

ACTION: Advisory Committee on Biotechnology and 21st Century Agriculture Renewal.

SUMMARY: Notice is hereby given that the Secretary of Agriculture has renewed the Advisory Committee on Biotechnology and 21st Century Agriculture (AC21). The Secretary of Agriculture has determined that the Committee is necessary and in the public interest.

FOR FURTHER INFORMATION CONTACT: Questions should be addressed to Michael Schechtman, Designated Federal Official, telephone (202) 720–3817; fax (202) 690–4265; email *AC21@ars.usda.gov.*

SUPPLEMENTARY INFORMATION: USDA believes it is important to maintain an intensive and regular dialogue to explore and understand the broad array of issues related to the expanding dimensions and importance of agricultural biotechnology. The AC21 has been established to provide information and advice to the Secretary of Agriculture on issues related to agricultural biotechnology. The purpose of this Committee is to advise the Secretary of Agriculture on the broad array of issues related to the expanding dimensions and importance of agricultural biotechnology.

Dated: January 23, 2013.

Catherine Woteki,

Under Secretary for Research, Education, and Economics.

[FR Doc. 2013–02175 Filed 1–31–13; 8:45 am]

BILLING CODE 3410–03–P

DEPARTMENT OF AGRICULTURE

Agricultural Marketing Service

[Docket No. AMS–DA–08–0031; DA–08–05]

Continuation of 2008 Farm Bill—Dairy Forward Pricing Program

AGENCY: Agricultural Marketing Service, USDA.

ACTION: Notice.

SUMMARY: The American Taxpayer Relief Act of 2012 (ATRA) extended the authorization of the Dairy Forward Pricing Program contained in the Food, Conservation and Energy Act of 2008 (the 2008 Farm Bill), through September 30, 2013. This document provides notice that producers and cooperative associations of producers may enter into forward price contracts under the Dairy Forward Pricing Program through September 30, 2013, as provided for in the Final Rule published October 31, 2008 (73 FR 64868). The 2008 Farm Bill initially prohibited new forward contracts from being entered into after September 30, 2012, and no forward contracts entered into under the program extending beyond September 30, 2015. However, passage of the ATRA that was signed into law on January 2, 2013, revised the program to allow new contracts to be entered into until September 30, 2013. Any forward contract entered into up and until the September 30, 2013, deadline is still subject to the September 30, 2015, cutoff date to meet the terms of the contract.

DATES: *Effective Date:* February 1, 2013.

FOR FURTHER INFORMATION CONTACT: Roger Cryan, Director, Economics Division, USDA/AMS/Dairy Programs, Stop 0229–Room 2753–S, 1400 Independence Avenue SW., Washington, DC 20250–0231, (202) 720–7091, email address: *roger.cryan@ams.usda.gov.*

SUPPLEMENTARY INFORMATION: The Dairy Forward Pricing Program (73 FR 64868) allows producers and cooperative associations of producers to voluntarily enter into forward price contracts with handlers for milk used for Class II, III, or IV purposes under the Agricultural Marketing Agreement Act of 1937 (AMAA), (7 U.S.C. 601 *et seq*). The program also allows handlers regulated under the Federal milk marketing order program to pay producers and cooperative associations in accordance with the terms of a forward contract and not have to pay the minimum Federal order blend price for producer milk. This program was initially established in accordance with the 2008 Farm Bill (H.R. 6124, Pub. L. 110–246). The American Taxpayer Relief Act of 2012 (ATRA), (H.R. 8, Pub. L. 112–240), extended the authorization of the Dairy Forward Pricing Program contained in the Food, Conservation and Energy Act of 2008 (the 2008 Farm Bill) (H.R. 6124, Pub. L. 110–246) through September 30, 2013.

The program authorizes that under the AMAA, milk handlers pay producers or cooperative associations of producers a negotiated price, rather than the Federal order minimum blend price for producer milk if subject to conditions and terms of a forward contract, provided the volume of such milk does not exceed the handler's Class II, III, and IV utilization for the month on the order that regulates the milk. The program applies to producer milk regulated under Federal milk marketing orders that is not classified as Class I milk or milk otherwise intended for fluid use and that is in the current of interstate or foreign commerce or directly burdens, obstructs, or affects interstate or foreign commerce of Federally regulated milk. The Federal milk marketing order program consists of 10 Federal milk marketing orders (7 CFR parts 1001–1131).

Dated: January 29, 2013.

Rex A. Barnes,

Acting Administrator.

[FR Doc. 2013–02170 Filed 1–31–13; 8:45 am]

BILLING CODE 3410–02–P

DEPARTMENT OF AGRICULTURE

Commodity Credit Corporation

Continuation of Farm Service Agency 2008 Farm Bill Programs

AGENCY: Commodity Credit Corporation and Farm Service Agency, USDA.

ACTION: Notice.

SUMMARY: The American Taxpayer Relief Act of 2012 (ATRA) extended the authorization of the Food, Conservation, and Energy Act of 2008 (the 2008 Farm Bill) through the 2013 crop year, fiscal year (FY), or calendar year, as applicable, for certain Commodity Credit Corporation (CCC) commodity

and conservation programs administered by the Farm Service Agency (FSA). This notice provides information about which programs have been extended for an additional year, which programs producers will need to enroll in through applications and contracts, and the dates for the submission of the required applications. The extended programs will be administered through their current terms and procedures for the applicable period of extension, except as provided in this notice.

DATES: *Effective Date:* February 1, 2013.

FOR FURTHER INFORMATION CONTACT: Craig Trimm; telephone: (202) 720–3175. Persons with disabilities who require alternative means for communication (Braille, large print, audiotape, etc.) should contact the USDA Target Center at (202) 720–2600 (voice and TDD).

SUPPLEMENTARY INFORMATION: ATRA (Pub. L. 112–240, January 2, 2013) authorized the continuation of certain CCC and FSA payment limitation and income eligibility requirements, commodity programs, and conservation programs previously authorized or amended in the 2008 Farm Bill (Pub. L. 110–246). Certain other authorities were not extended. Program authorizations and mandatory funding authorizations that were not extended are noted below. Extended programs (including mandatory funding) include the Direct and Counter-Cyclical Payment Program (DCP), Average Crop Revenue Election Program (ACRE), Milk Income Loss Contract Program (MILC), Dairy Product Price Support Program (DPPSP), Dairy Indemnity Payment Program (DIPP), Marketing Assistance Loans (MAL), Loan Deficiency Payments (LDP), Conservation Reserve Program (CRP), Upland Cotton and Extra Long Staple Cotton Programs, and Sugar Program.

Generally, these programs will continue to operate in 2013 as they did in 2012, with some minor modifications noted briefly below. ATRA authorized most CCC programs for the 2013 crop year, but MILC was authorized for FY 2013, and DPPSP was authorized for calendar year 2013.

FSA is updating software, forms, and handbooks for the 2013 continuation of the programs. FSA is updating program Fact Sheets and will conduct extensive outreach to ensure that producers are aware of sign-up periods and application requirements. Details for each program are being announced in news releases to facilitate planning for the 2013 growing season.

DCP and ACRE

The 2013 DCP provisions are unchanged from 2012. DCP provides two types of payments to eligible producers on enrolled farms: direct payments and counter-cyclical payments. Both are calculated using historical base acres and payment yields established for the farm. To participate in and receive DCP payments, eligible producers must enroll through the annual sign-up. Signup for the 2013 crop year will begin on February 19, 2013, and will end on August 2, 2013. Direct payments will be issued to eligible producers in October 2013. As the 2008 Farm Bill did not authorize advance direct payments for the 2012 crop year, such payments are also not authorized for the 2013 crop year. Counter-cyclical payments for the 2013 crop will be issued to eligible producers beginning in October 2014, if effective prices are less than target prices. As with previous years, if effective prices are greater than specified target prices during the 2013 marketing year, there will be no counter-cyclical payments.

The 2013 ACRE provisions are mostly unchanged from 2012. ACRE is an alternative program to DCP that provides payments only if both the State and Farm triggers are met. The State ACRE Guarantee must exceed the Actual State Revenue and the Farm ACRE Guarantee must exceed the Actual Farm Revenue. Producers who elect to enroll a farm in ACRE must agree to:

(1) Forgo counter-cyclical payments,

(2) A 20-percent reduction in their direct payments, and

(3) A 30-percent reduction in the MAL rates for all commodities produced on the farm that are eligible for ACRE payments.

ACRE payments are tied to current plantings on the farm, in contrast to countercyclical payments, which are tied to the farm's base acres. As specified in the 2008 Farm Bill and in the current regulations for ACRE, a producer who elected to participate in ACRE could not participate in DCP from the year in which he elected to participate in ACRE through 2012. Because the provision imposing irrevocability of such election expired on September 30, 2012, all eligible producers may choose to enroll in either DCP or ACRE for the 2013 crop year. This means that producers who were enrolled in ACRE in 2012 may elect to enroll in DCP in 2013 or may re-enroll in ACRE in 2013 (and vice versa), subject to eligibility requirements. To participate and receive ACRE payments, eligible producers must sign up to enroll in ACRE for the 2013 crop year. ACRE signup will begin on February 19, 2013 (at the same time that DCP signup begins), and will end on June 3, 2013.

MILC

MILC was extended by ATRA through September 30, 2013, with minor modifications. MILC compensates enrolled dairy producers when the Boston Class I milk price falls below $16.94 per hundredweight (cwt), as adjusted by the dairy feed ration adjustment specified in both the 2008 Farm Bill and in the current regulations for MILC, 7 CFR Part 1430, ''Dairy Products.'' All producers' MILC contracts are automatically extended to September 30, 2013. Producers therefore do not need to re-enroll in MILC. The production start month previously selected by an operation is applicable for FY 2013, unless a producer requests a change as discussed below.

September 2012 was the last eligible month for MILC payments under the 2008 Farm Bill. ATRA increased the MILC payment formula for September 2012, resulting in a payment rate of about $0.59 per hundredweight for that month. Prior to ATRA, the applicable rate as of September 1, 2012 would have been zero under the formula in the 2008 Farm Bill. ATRA reduces the payment rate beginning September 1, 2013. The September 2012 payment will automatically be disbursed in the near future to eligible producers who have not exceeded their maximum eligible production quantity of 2.985 million pounds for FY 2012. Producers currently enrolled in MILC are also eligible for about a $0.02 per hundredweight payment for October 2012, if that month is selected as their production start month for FY 2013. The payment rate determined for November 2012 is zero. Payments for subsequent months will be determined as data become available.

Dairy operations may select a start month for FY 2013 other than October 2012 (the start of FY 2013). Producers will be able to select any month in FY 2013 to begin receiving payments. During the period (referred to as the ''relief period'') beginning February 1, 2013, through the close of business on February 28, 2013, producers with existing MILC contracts may make production start month selection changes for FY 2013 by completing and submitting form CCC–580M to FSA. For producers with new dairy operations that began operation before February 1, 2013, FSA will accept applications (form CCC–580) beginning February 1, 2013, and ending September 30, 2013. For eligibility information and other

requirements, producers should contact their local FSA office. During the relief period, the producer may select any month in FY 2013 (beginning October 2012) as the production start month; start month selection provisions specified in 7 CFR 1430.205, ''Selection of Starting Month'' do not apply. After the relief period, beginning March 1, 2013, all production start month changes for new and existing MILC participants must be made according to normal start month selection provisions as specified in 7 CFR 1430.205.

DPPSP

DPPSP is extended through December 31, 2013. DPPSP supports the price of cheddar cheese, butter, and nonfat dry milk by providing a standing offer from CCC to purchase those products at specific support prices. The support prices specified in the 2008 Farm Bill are the prices for 2013.

DIPP

DIPP is extended through September 30, 2013. Through DIPP, FSA issues payments to dairy producers for losses incurred because they were required to remove their milk production from commercial markets due to the presence of certain chemical or toxic residue.

MAL and LDP

The MAL program and LDP program were extended by ATRA for the 2013 crop year. The terms and conditions of such programs' provisions are unchanged from 2012. MALs for loan commodities allow producers to receive 9-month non-recourse loans from CCC. MALs provide an influx of cash when market prices are typically at harvest-time lows, allowing producers to delay the sale of the commodity until more favorable market conditions emerge. In lieu of securing a MAL, producers may elect to receive an LDP.

CRP

ATRA maintains the CRP enrollment cap at the 32 million acre level for FY 2013, unchanged from the 2008 Farm Bill. Current CRP enrollment is 27 million acres. In addition to periodic general signups, producers may enroll environmentally sensitive land through CRP's continuous signups. Continuous signup includes land enrolled through the Conservation Reserve Enhancement Program (CREP), which are state and federal partnerships that provide payments for installing specific conservation practices at specific locations. The dates producers may begin entering into new CRP contracts will be announced through the normal process of news releases.

Sugar Program

The Sugar Program, including the related Feedstock Flexibility Program, is extended for the 2013 crop year with no changes. The Sugar Program will continue to operate as specified in the 2008 Farm Bill and in the current regulations.

Upland Cotton and ELS Cotton

The Upland Cotton and ELS Cotton Programs are extended through the 2013 crop year, with no changes. The 2008 Farm Bill specified that the special import quota for upland cotton and the Competitiveness Program for ELS Cotton were for a period through July 31, 2013; these programs are extended through the 2013 crop year, which ends on July 31, 2014. The Upland Cotton and ELS Cotton Programs will continue to operate as specified in the 2008 Farm Bill and in the current regulations.

Other Payment Eligibility Requirements Extended

ATRA extended the provisions of the 2008 Farm Bill that concern income eligibility and payment limitation.

The adjusted gross income (AGI) requirements for 2013 are unchanged from 2012 requirements. The average AGI provisions apply to most of the programs administered by FSA and NRCS. Before producers can receive payments for 2013 programs with AGI provisions, they must file the proper forms to certify that their incomes are below specified levels. The Internal Revenue Service also requires written consent from the individual or legal entity for it to verify the individual or legal entity's AGI and to provide such verification to the U.S. Department of Agriculture. To provide the annual AGI certification and written consent, participants must complete Form CCC–933, ''Average Adjusted Gross Income (AGI) Certification and Consent to Disclosure of Tax Information'' for 2013. Form CCC–933 is available at local FSA and NRCS offices or online through the FSA Web site.

Participants in Federal farm programs that have farm land identified as highly erodible or as a wetland must continue to comply with certain land and environmental conservation requirements for payment eligibility purposes in 2013. The regulations in 7 CFR part 12, ''Highly Erodible Land and Wetland Conservation,'' and 7 CFR part 1400, ''Payment Eligibility and Payment Limitation for 2009 and Subsequent Crop, Program, or Fiscal Years,'' apply to all FSA and CCC programs in 2013.

Programs That Are Authorized but Have Not Been Funded

Some programs, including certain disaster assistance programs, were reauthorized but are subject entirely to appropriation in each of fiscal years 2012 and 2013. As a result, those programs can be operated only if FY 2013 funds are appropriated for them. Such programs include the Biomass Crop Assistance Program (BCAP); Voluntary Public Access—Habitat Incentive Program (VPA–HIP); Livestock Indemnity Program (LIP); Livestock Forage Disaster Assistance Program (LFP); Emergency Assistance for Livestock, Honeybees, and Farm-Raised Fish Program (ELAP); and Tree Assistance Program (TAP).

Expired Programs

Some programs in the 2008 Farm Bill were not extended by ATRA. There is no authority provided by ATRA for the Supplemental Revenue Assistance Payments Program (SURE) or for the Market Loss Assistance for Asparagus Producers Program (ALAP).

Environmental Review

FSA has determined that the authorization to extend certain provisions of the 2008 Farm Bill through 2013 as described in this notice would not constitute a major Federal action significantly affecting the quality of the human environment, as no new program provisions or implementation requirements were established under ATRA. Therefore, in accordance with the 7 CFR Part 799, Environmental Quality and Related Environmental Concerns—Compliance with the National Environmental Policy Act, implementing the regulations of the Council on Environmental Quality (40 CFR parts 1500–1508), no environmental assessment or environmental impact statement will be prepared.

Signed at Washington, DC, on January 29, 2013.

Juan M. Garcia,

Executive Vice President, Commodity Credit Corporation and Administrator, Farm Service Agency.

[FR Doc. 2013–02218 Filed 1–31–13; 8:45 am]

BILLING CODE 3410–05–P

DEPARTMENT OF AGRICULTURE

Farm Service Agency

Commodity Credit Corporation

Information Collection Request; Economic Assessment of Conservation Reserve Program Lands for Hunting

AGENCY: Farm Service Agency and Commodity Credit Corporation, USDA.

ACTION: Notice; request for comments.

SUMMARY: In accordance with the Paperwork Reduction Act of 1995, the Farm Service Agency (FSA), on behalf of the Commodity Credit Corporation (CCC), is requesting comments from all interested individuals and organizations on a new information collection request associated with the ''Economic Assessment of Conservation Reserve Program (CRP) Lands for Hunting.''

DATES: We will consider comments that we receive by April 2, 2013.

ADDRESSES: We invite you to submit comments on this notice. In your comments, include date, OMB control number, volume, and page number of this issue of the **Federal Register**. You may submit comments by any of the following methods:

- *Federal eRulemaking Portal:* Go to *http://regulations.gov.* Follow the online instructions for submitting comments.
- *Mail:* Skip Hyberg, Agricultural Economist, Economic and Policy Analysis Staff, Farm Service Agency, 1400 Independence Ave. SW., Room 3730, Mail Stop 0519, Washington, DC 20250.

Comments also should be sent to the Desk Officer for Agriculture, Office of Information and Regulatory Affairs, Office of Management and Budget, Washington, DC 20503. Copies of the information collection may be obtained from Dr. Skip Hyberg at the above address.

FOR FURTHER INFORMATION CONTACT: Dr. Skip Hyberg, (202) 720–9222. Persons with disabilities who require alternative means for communication (Braille, large print, audio tape, etc.) should contact the USDA Target Center at (202) 720–2600 (voice and TDD).

SUPPLEMENTARY INFORMATION:

Title: Economic Assessment of Conservation Reserve Program Lands for Hunting.

OMB Control Number: 0560–NEW.

Type of Request: New.

Abstract: In accordance with the Food Security Act of 1985 (Pub. L. 99–198), as amended, FSA, on behalf of CCC, administers the CRP to conserve and improve soil, water, and wildlife resources. Federal investments in the CRP on private cropland enhance essential ecosystem resources, including wildlife, which has been documented to provide improved hunting opportunities in rural areas. As such, hunters from within the state and non-residents outside the state are drawn to CRP lands or other private lands surrounding CRP lands for hunting.

FSA considers benefits from the enhancement of wildlife habitat when selecting CRP offers. As hunting opportunities increase, so too does hunter spending, generating economic activity and employment within the outdoor recreational sector, which is of particular importance to rural communities in the region. FSA is responsible for identifying and quantifying the relationship between job creation and investments in CRP lands, as increased outdoor recreation is among the benefits FSA provides in administering the CRP.

Without data on hunter use and expenditures, the economic contribution generated by federal investments in the CRP cannot be reliably estimated. With this in mind, FSA plans to work with Colorado State University to conduct statewide mail surveys with deer, upland bird, and waterfowl hunters in North Dakota (ND) and South Dakota (SD). There have thus far been no statewide assessments of the CRP program on hunting use, expenditures, and jobs in ND or SD; the only prior studies focused on six small areas in ND and are now more than 10 years old. There have also been significant changes to the CRP since that time. In addition, there is limited generalizability of the six ND areas to the rest of ND and to SD. Therefore, FSA believes that these new statewide surveys will assist it in successfully furthering the goals of the CRP. Each of the six surveys will elicit information on hunters':

(a) Hunting activity in 2013;

(b) Use of CRP lands in terms of days spent hunting there;

(c) Expenditure pattern information; and

(d) Demographic information.

The primary objective of the surveys is to enable FSA to estimate the economic job and income contribution of current CRP lands on the rural areas within the respective states, and possible changes to jobs and income from potential changes to CRP lands emanating from either changes in the CRP program or farmers' response to non program conditions.

The research proposal has been discussed with the respective State Fish and Game agencies, and it was decided that mail surveys are the best tool to obtain the data needed to estimate CRP's contribution to rural economies. Mail surveys appear to be the best approach for an unbiased survey because the State Fish and Game agencies do not have email addresses for all hunters, and hunters in many rural locations of ND and SD do not have email access at home.

Collection of the data is necessary to evaluate and improve CRP selection criteria and program implementation, as described above. Having information on recreation-related jobs will help FSA to conduct a comparison of county level impacts of land temporarily going out of crop production via CRP. The data will be analyzed by Dr. John Loomis of Colorado State University's Department of Agricultural and Resource Economics.

Estimate of Burden: Public reporting burden for this information collection is estimated to average 15 minutes per response.

Frequency of Collection: One time only.

Respondents: Hunters with ND and SD hunting licenses.

Estimated Number of Annual Respondents: 6,000.

Estimated Number of Responses per Respondent: 1.

Estimated Total Annual Responses: 6,000.

Estimated Total Annual Burden on Respondents: 1,500 hours.

We are requesting comments on all aspects of this information collection to help us to:

(1) Evaluate whether the collection of information is necessary for the proper performance of the functions of FSA, including whether the information will have practical utility;

(2) Evaluate the accuracy of FSA's estimate of burden including the validity of the methodology and assumptions used;

(3) Enhance the quality, utility, and clarity of the information to be collected; and

(4) Minimize the burden of the collection of information on those who are to respond, including through the use of appropriate automated, electronic, mechanical, or other technological collection techniques or other forms of information technology.

All responses to this notice, including name and addresses when provided, will be summarized and included in the request for OMB approval. All comments will also become a matter of public record.

Signed on January 23, 2013.

Juan M. Garica,

Administrator, Farm Service Agency, and Executive Vice President, Commodity Credit Corporation.

[FR Doc. 2013–02358 Filed 1–31–13; 8:45 am]

BILLING CODE 3410–05–P

DEPARTMENT OF AGRICULTURE

Forest Service

Motorized Travel Management Plan, Tonto National Forest; Gila, Maricopa, Pinal, and Counties, AZ

AGENCY: Forest Service, USDA.

ACTION: Notice of intent to prepare an environmental impact statement.

SUMMARY: The Tonto National Forest will prepare an environmental impact statement (EIS) to disclose the effects of designating a system of roads, trails, and areas for motorized vehicle use, thereby developing a motorized travel management plan. Such a plan is needed to meet National travel management regulations and to improve the management and enforcement of motor vehicle use on National Forest Service lands. This notice describes the components to be included in the motorized travel plan, proposed forest plan amendment, decisions to be made, estimated dates pertaining to the project, information concerning public participation, and the responsible agency official. The project area is defined by the boundaries of the Tonto National Forest, and includes the Cave Creek, Globe, Mesa, Payson, Pleasant Valley, and Tonto Basin ranger districts.

DATES: Written comments to be considered in the preparation of the draft environmental impact statement (DEIS) should be submitted on or before March 4, 2013. The DEIS is expected to be published in June 2013. The final environmental impact statement (FEIS) and record of decision (ROD) is expected to be available by November 2013.

ADDRESSES: Send written comments to Neil Bosworth, Forest Supervisor, ATTN: Travel Management, 2324 E. McDowell Rd., Phoenix, AZ 85006. Comments may also be sent via email to *comments-southwestern-TMRTonto@fs.fed.us*, or via facsimile (602) 225–5295.

FOR FURTHER INFORMATION CONTACT: Anne Thomas, Tonto National Forest NEPA Coordinator, 2324 E. McDowell Rd., Phoenix, AZ 85006, (602) 225–5213.

Individuals who use telecommunication devices for the deaf (TDD) may call the Federal Information Relay Service (FIRS) at 1–800–877–8339 between 8 a.m. and 8 p.m., Eastern Time, Monday through Friday.

SUPPLEMENTARY INFORMATION: On November 9, 2005, the Forest Service published final travel management regulations governing off-highway vehicles (OHV) and other motor vehicles on national forests and grasslands. The regulations amended part 212, subpart B of part 251, subpart A of part 261, and removed part 295 of title 36 of the Code of Federal Regulations (CFR). These three regulations are referred to together as the Travel Management Rule. This rule was developed in response to the substantial increase in use of OHVs on National Forest System lands and related damage to forest resources caused by unmanaged OHV use over the past 30 years. The regulations implement Executive Orders (EO) 11644 and EO 11989 regarding off-road use of motor vehicles on Federal lands.

The regulations provide ''for a system of National Forest System (NFS) roads, NFS trails, and areas of NFS lands that are designated for motor vehicle use. Motor vehicle use off designated roads and trails and outside of designated areas is prohibited'' (36 CFR 212.50). Designated routes and areas shall be identified on a motor vehicle use map (MVUM) and made available to the public. Currently, motor vehicles may drive on any open road on the Tonto National Forest. The Tonto National Forest does not currently manage trails for motorized use. In the 1985 Tonto National Forest Plan, approximately 700,004 acres were identified as open to cross-country travel in the Payson and Pleasant Valley ranger districts. In addition, the 1985 Tonto National Forest Plan identified over 2,170,000 acres closed to cross-country OHV travel in the Cave Creek, Mesa, Globe, and Tonto Basin ranger districts.

In order to comply with the travel management regulations, the Tonto National Forest participated in a forestwide travel analysis process beginning in 2007 that was facilitated by a contractor. The intent of this process was to help the forest determine the minimum transportation system necessary to provide safe and efficient travel and for administration, utilization, and protection of NFS lands (36 CFR 212.5(b)). Based on internal scoping, the Forest Supervisor determined that the Tonto National Forest would prepare an Environmental Assessment (EA) to complete the analysis required to comply with the Travel Management Rule. In October 2009, the forest released a proposed action. Seven public meetings were held throughout the communities within and proximate in November and December 2009 to gather public comments about the proposed action, including roads and trails proposed for motorized use. Comments to the proposed action were accepted through December 4, 2009. A draft version of the EA was released for public comment on January 6, 2012, for a 30-day comment period. Due to the length and complexity of the Environmental Assessment and requests from the public, an additional 30-day comment period began on February 5, 2012. Approximately 300 letters were received during these two comment periods.

After initiating compliance with the Travel Management Rule under an EA, the Tonto National Forest determined that the level of significance reached a point that environmental analysis for travel management under an Environmental Impact Statement (EIS) would be more appropriate. All comments provided throughout the process thus far, including those to the 2009 proposed action, the 2012 Environmental Assessment, and public meetings, will continue to be considered and may be incorporated into either the proposed action for the EIS or alternatives to that proposed action.

Purpose and Need for Action

The purpose of this project is to comply with the Travel Management Rule by providing a system of roads, trails, and areas designated for motor vehicle use by class of vehicle and time of year on the Tonto National Forest. There is a need to determine which, if any, authorized National Forest System (NFS) roads currently open should be closed to motorized travel. In addition, there is a need to determine which, if any, authorized roads currently closed should be open to motorized travel. There is also a need identify any restrictions on allowed uses, classes of vehicles, and/or seasons of use for specific routes. There is also a need to determine which, if any, unauthorized routes should be added to NFS as trails and roads open for motorized access. In addition, there is a need to determine if, when, where, and how far motor vehicles may be driven off designated roads for the sole purpose of motorized dispersed camping or big game retrieval. And finally, there is a need to amend 1985 Tonto National Forest Plan to prohibit motor vehicle use off designated NFS roads, trails, and areas on two ranger districts (Payson and Pleasant Valley) except as shown on the Motor Vehicle Use Map (MVUM) and to

revise wording for consistency regarding definition to comply with Travel Management Rule, 36 CFR 261.13.

Proposed Action

For the purposes of this project and notice, the term ''road'' or ''trail'' is defined as a National Forest System (NFS) road or trail that is designated for motor vehicle use pursuant to 36 CFR 212.51. An ''unauthorized road or trail'' is not a forest road or trail or a temporary road or trail and that is not included in a forest transportation atlas. Unauthorized routes have generally developed without agency authorization, environmental analysis, or public involvement and do not have the same status as NFS roads or trails included in the forest transportation system. To meet the purpose and need of the project, the actions listed below are proposed. The proposed action has been modified based on comments received from the 2009 scoping period through the 2012 Environmental Assessment comment period.

Roads proposed open to motor vehicles: Approximately 2,567 miles of roads would be open to high clearance vehicles and approximately 967 miles would be open to passenger vehicles. Approximately 1,187 miles of roads would be designated for Administrative Use, restricting use to federal employees and permitted uses. Approximately 842 miles of existing roads would be closed. In this case, close means it would be closed to public travel. Some of these roads would be retained for periodic administrative use only (maintenance Level 1) and others will be decommissioned (removed from the forest inventory). The most relevant aspect of this action is closing the road to public travel. Decisions to obliterate decommissioned roads are outside the scope of this project, because they require further site-specific environmental analysis before being undertaken. Approximately 280 miles of user-created routes would be added to the forest transportation system. These routes would be managed as roads and will be open to public travel.

Trails proposed open to motor vehicles: Approximately 251 miles would be open to off-highway vehicle (OHV) travel only.

Areas proposed open for cross-country motorized travel: Four areas within the Tonto National Forest would be designated permitting cross-country motorized travel: Golf Course OHV Area within the Globe Ranger District (approximately 17 acres); Sycamore OHV Area within the Mesa Ranger District (approximately 1,391 acres); Sycamore Tot Lot OHV Area, intended for youth users, within the Mesa Ranger District (approximately 3 acres); and The Rolls Tot Lot, also intended for youth users, within the Mesa Ranger District (approximately 6 acres).

This proposed action would result in approximately 3,812 miles of designated NFS roads and trails and 1,417 acres of designated areas open to motor vehicles on the Tonto National Forest.

Motorized big game retrieval: Motorized retrieval of big game, elk and bear only, would be limited to one mile off either side of NFS roads to retrieve a downed elk or bear by an individual who has legally taken the animal. This would occur on all open roads in Arizona Game Management Units 21, 22, 23, 24A, and 24B, but would not extend into wilderness areas or inventoried roadless areas. Unit 22 includes approximately 920 acres of the Coconino National Forest. The decision for motorized big game retrieval for these 920 acres of Unit 22 will be under the authority of the Tonto National Forest decision maker.

Dispersed camping: Motorized travel for the purpose of dispersed camping would not be allowed off designated roads and trails. Vehicles would be allowed to park one vehicle length, or up to 30 feet, from the edge of the designated road or trail.

OHV permit zones: Four permit zones would be designated within the forest: Bulldog Canyon Permit Zone within the Mesa Ranger District; St. Claire Permit Zone within the Cave Creek Ranger District; Sycamore Permit Zone within the Mesa Ranger District, and The Rolls Permit Zone within the Mesa Ranger District. Within a permit zone, vehicles would be required to stay on designated roads and trails. Motorized users would be required to obtain a permit and a gate combination code from the designated Tonto National Forest office before accessing these zones.

The proposed action would amend the Forest Plan to prohibit motor vehicle use off designated NFS roads, trails, and areas on two ranger districts (Payson and Pleasant Valley), except as shown on the Motor Vehicle Use Map (MVUM) and to revise wording in order to be consistent with the language and intent in 36 CFR 212.

Possible Alternatives

In addition to the Proposed Action, the No Action alternative will be analyzed. The Forest Service is required to analyze the ''No Action'' alternative under the provisions of NEPA (40 CFR 1502.14). Since the original scoping for this project in 2009, several concerns and issues were raised concerning travel management on the Tonto National Forest. These included the need to increase motorized travel opportunities on designated roads, trails and areas, provided greater protection for natural resources by decreasing the amount of roads, trails, and areas, and provide greater motorized access to dispersed camping sites and retrieval of big game. These issues, along with issues raised during the scoping period for the EIS, will be used to develop alternatives to the proposed action.

Responsible Official

The responsible official for this project is the Tonto National Forest Supervisor.

Nature of Decision To Be Made

Elements in this decision include: Changes to the existing road system; changes to existing motorized trails and areas open to cross-country motorized travel; the distance motor vehicles may travel off specific designated routes for the purpose of dispersed camping and big game retrieval; and language and content changes to the Tonto Forest Plan via a forest plan amendment. The decision will be based on a consideration of the environmental effects of implementing the proposed action or alternatives developed in response to significant issues. The Forest Supervisor may select the proposed action, an alternative analyzed in detail, or a modified proposed action or alternative within the project's range of alternatives.

Scoping Process

Scoping is an ongoing procedure used to identify important issues and determine the extent of analysis necessary for an informed decision on a proposed action. This Notice of Intent serves as formal initiation of the scoping process. The Forest Service is seeking comments from individuals, organizations, and local, state, and Federal agencies that may be interested in or affected by the proposed action. Comments may pertain to the nature and scope of the environmental, social, and economic issues, and possible alternatives related to the development of the motorized travel plan and EIS. When submitting comments, please keep them specific to this proposal only. Comments which are not specific to the project and project area will be deemed outside the scope of the analysis and will not be considered. If you provide recommendations for changes to routes or areas, please include route numbers or location descriptions, as well as the reasons for your recommendations. If you are including references, citations, or additional information to be

considered for this project, please specify exactly how the material relates to the project. Also indicate exactly what part of the material you would like us to consider (such as page or figure number).

A copy of the proposed action has been made available electronically on the Tonto National Forest's Web site. For those wishing to receive a copy of the proposed action or would like to have their names added to the project mailing list, please submitted a request to: Anne Thomas, Tonto National Forest NEPA Coordinator, 2324 E. McDowell Rd, Phoenix, AZ, 85006, (602) 225–5213, *comments-southwestern-TMRTonto@fs.fed.us*

Comment Requested

This notice of intent initiates the scoping process, which guides the development of the environmental impact statement.

It is important that reviewers provide their comments at such times and in such manner that they are useful to the agency's preparation of the environmental impact statement. Therefore, comments should be provided prior to the close of the comment period and should clearly articulate the reviewer's concerns and contentions.

Comments received in response to this solicitation, including names and addresses of those who comment, will be part of the public record for this proposed action. Comments submitted anonymously will be accepted and considered; however, anonymous comments will not provide the Agency with the ability to provide the respondent with subsequent environmental documents.

Dated: January 24, 2013.

Neil J. Bosworth,

Forest Supervisor.

[FR Doc. 2013–02199 Filed 1–31–13; 8:45 am]

BILLING CODE 3410–11–P

COMMISSION ON CIVIL RIGHTS

Agenda and Notice of Public Meeting of the Florida Advisory Committee

Notice is hereby given, pursuant to the provisions of the rules and regulations of the U.S. Commission on Civil Rights (Commission) and the Federal Advisory Committee Act that a meeting of the Florida Advisory Committee (Committee) will convene on Thursday, February 21, 2013 at 10:30 a.m. and adjourn at approximately 11:30 a.m. The meeting will be held at the Leon County Main Public Library, 200 West Park Avenue, Tallahassee, FL 32301. The purpose of the meeting is for the Committee to receive ethics training and orientation and plan future activities.

Members of the public are entitled to submit written comments; the comments must be received in the regional office by March 21, 2013. Written comments may be mailed to the Southern Regional Office, U.S. Commission on Civil Rights, 61 Forsyth St. SW., Suite 16T126, Atlanta, GA 30303. They may also be faxed to the Commission at (404) 562–7005, or emailed to the Commission at *erodriguez@usccr.gov.* Persons who desire additional information may contact the Southern Regional Office at (404) 562–7000.

Hearing-impaired persons who will attend the meeting and require the services of a sign language interpreter should contact the Southern Regional Office at least ten (10) working days before the scheduled date of the meeting.

Records generated from this meeting may be inspected and reproduced at the Southern Regional Office, as they become available, both before and after the meeting. Persons interested in the work of this Committee are directed to the Commission's Web site, *http://www.usccr.gov,* or may contact the Southern Regional Office at the above email or street address.

The meeting will be conducted pursuant to the rules and regulations of the Commission and FACA.

Dated in Washington, DC, January 28, 2013.

David Mussatt,

Acting Chief, Regional Programs Coordination Unit.

[FR Doc. 2013–02119 Filed 1–31–13; 8:45 am]

BILLING CODE 6335–01–P

DEPARTMENT OF COMMERCE

Census Bureau

Proposed Information Collection; Comment Request; 2014 New York City Housing and Vacancy Survey

AGENCY: U.S. Census Bureau, Commerce.

ACTION: Notice.

SUMMARY: The Department of Commerce, as part of its continuing effort to reduce paperwork and respondent burden, invites the general public and other Federal agencies to take this opportunity to comment on proposed and/or continuing information collections, as required by the Paperwork Reduction Act of 1995, Public Law 104–13 (44 U.S.C. 3506(c)(2)(A)).

DATES: To ensure consideration, written comments must be submitted on or before April 2, 2013.

ADDRESSES: Direct all written comments to Jennifer Jessup, Departmental Paperwork Clearance Officer, Department of Commerce, Room 6616, 14th and Constitution Avenue NW., Washington, DC 20230 (or via the Internet at *jjessup@doc.gov*).

FOR FURTHER INFORMATION CONTACT: Requests for additional information or copies of the information collection instrument(s) and instructions should be directed to Alan Friedman, US Census Bureau, Room 7H590H, Washington, DC 20233–8500; phone: (301) 763–5664; or *alan.friedman@census.gov*.

SUPPLEMENTARY INFORMATION:

I. Abstract

The Census Bureau plans to conduct the 2014 New York City Housing and Vacancy Survey (NYCHVS) under contract for the City of New York. The primary purpose of the survey is to measure the rental vacancy rate, which is the primary factor in determining the continuation of rent control regulations. Other survey information is used by city and state agencies for planning purposes and by the private sector for business decisions. New York is required by city law to have such a survey conducted every three years.

Information to be collected includes: age, gender, race, Hispanic origin, and relationship of all household members; employment status, education level, and income for persons aged 15 and above. Owner/renter status (tenure) is asked for all occupied units. Utility costs, monthly rent, availability of kitchen and bathroom facilities, maintenance deficiencies, neighborhood suitability, and other specific questions about each unit such as number of rooms and bedrooms are also asked. The survey also poses a number of questions relating to handicapped accessibility. For vacant units, a shorter series of similar questions is asked. Finally, all vacant units and approximately five percent of occupied units will be reinterviewed for quality assurance purposes.

The Census Bureau compiles the data in tabular format based on specifications of the survey sponsor, as well as non-identifiable microdata. Both types of data are also made available to the general public through the Census Internet site. Note, however, that the sponsor, like the general public, does

not receive any information that identifies any sample respondent or household.

II. Method of Collection

All information will be collected via personal interview.

III. Data

OMB Control Number: 0607–0757.

Form Numbers: H–100, H–108.

Type of Review: Regular submission.

Affected Public: primarily households and some rental offices/realtors (for vacants).

Estimated Number of Respondents: 17,850 occupied units, 950 vacant units, 1,900 reinterviews.

Estimated Time Per Response: 30 minutes—occupied, 10 minutes—vacant, 10 minutes—reinterview.

Estimated Total Annual Burden Hours: 9,400.

Estimated Total Annual Cost: The only cost to respondents is that of their time.

Respondent's Obligation: Voluntary.

Legal Authority: Title 13 U.S.C.—Section 8b and Local Emergency Housing Rent Control Act, Laws of New York (Chapters 8603 and 657).

IV. Request for Comments

Comments are invited on: (a) Whether the proposed collection of information is necessary for the proper performance of the functions of the agency, including whether the information shall have practical utility; (b) the accuracy of the agency's estimate of the burden (including hours and cost) of the proposed collection of information; (c) ways to enhance the quality, utility, and clarity of the information to be collected; and (d) ways to minimize the burden of the collection of information on respondents, including through the use of automated collection techniques or other forms of information technology.

Comments submitted in response to this notice will be summarized and/or included in the request for OMB approval of this information collection; they also will become a matter of public record.

Dated: January 28, 2013.

Glenna Mickelson,

Management Analyst, Office of the Chief Information Officer.

[FR Doc. 2013–02128 Filed 1–31–13; 8:45 am]

BILLING CODE 3510–07–P

DEPARTMENT OF COMMERCE

Foreign-Trade Zones Board

[B–72–2012]

Foreign-Trade Zone 121—Albany, NY; Authorization of Production Activity; Albany Molecular Research, Inc.; Subzone 121A (Pharmaceutical Chemicals Production); Rensselaer, NY

On September 26, 2012, Albany Molecular Research, Inc., submitted a notification of proposed production activity to the Foreign-Trade Zones (FTZ) Board for Subzone 121A, at its facility in Rensselaer, New York.

The notification was processed in accordance with the regulations of the FTZ Board (15 CFR part 400), including notice in the **Federal Register** inviting public comment (77 FR 63290, 10/16/2012). The FTZ Board has determined that no further review of the activity is warranted at this time. The production activity described in the notification is authorized, subject to the FTZ Act and the Board's regulations, including Section 400.14.

Dated: January 25, 2013.

Andrew McGilvray,

Executive Secretary.

[FR Doc. 2013–02198 Filed 1–31–13; 8:45 am]

BILLING CODE P

DEPARTMENT OF COMMERCE

Foreign-Trade Zones Board

[B–9–2013]

Foreign-Trade Zone 41—Milwaukee, WI; Notification of Proposed Production Activity; CNH America, LLC, Subzone 41I (Tractors and Tractor/Combine Components), Racine, WI

The Port of Milwaukee, grantee of FTZ 41, submitted a notification of proposed production activity on behalf of CNH America, LLC (CNH), operator of Subzone 41I, at its facilities in Racine, Wisconsin. The notification conforming to the requirements of the regulations of the Foreign Trade-Zones Board (the Board) (15 CFR 400.22) was received on January 18, 2013.

The CNH facilities are located within Subzone 41I. The facilities are used for the production of tractors and tractor/combine components. Pursuant to 15 CFR 400.14(b)4 of the regulations, FTZ activity would be limited to the specific foreign-status materials and components and specific finished products described in the submitted notification (as described below) and subsequently authorized by the FTZ Board.

Production under FTZ procedures could exempt CNH from customs duty payments on the foreign status components used in export production. On its domestic sales, CNH would be able to choose the duty rates during customs entry procedures that apply to valves and valve assemblies; differential axles; transmissions for combines and agricultural tractors; track-laying agricultural tractors; cab units for special purpose vehicles, including sprayer, floater, tractor and deluxe cabs; gear boxes for combines; final drives for combines; and drive axles (duty rates range from free to 4%). Customs duties also could possibly be deferred or reduced on foreign status production equipment.

The components and materials sourced from abroad include: Rubber hoses, copper alloy adapters, aluminum plates, feed filters, GPS kits including electrical connections, and LED's (duty rates range from free to 4%).

Public comment is invited from interested parties. Submissions shall be addressed to the Board's Executive Secretary at the address below. The closing period for their receipt is March 13, 2013.

A copy of the notification will be available for public inspection at the Office of the Executive Secretary, Foreign-Trade Zones Board, Room 21013, U.S. Department of Commerce, 1401 Constitution Avenue NW., Washington, DC 20230–0002, and in the ''Reading Room'' section of the Board's Web site, which is accessible via *www.trade.gov/ftz.*

For further information, contact Diane Finver at *Diane.Finver@trade.gov* or (202) 482–1367.

Dated: January 25, 2013.

Andrew McGilvray,

Executive Secretary.

[FR Doc. 2013–02196 Filed 1–31–13; 8:45 am]

BILLING CODE P

DEPARTMENT OF COMMERCE

Foreign-Trade Zones Board

[B–7–2013]

Notification of Proposed Production Activity; GE Appliances; Subzone 29C (Electric Water Heaters), Louisville, KY

GE Appliances, operator of Subzone 29C, submitted a notification of proposed production activity for its facility in Louisville, Kentucky. The notification conforming to the requirements of the regulations of the

Foreign-Trade Zones Board (15 CFR 400.22) was received on January 7, 2013.

The subzone (''GE Appliance Park'') currently has authority to produce household appliances, including dishwashers, refrigerator-freezers, freezers, apparel washing machines and dryers, electric ranges, and air-conditioners, under FTZ procedures using certain foreign components. The current request involves the production of electric water heaters. Pursuant to 15 CFR 400.14(b) of the regulations, FTZ activity would be limited to the specific foreign-status materials and components and specific finished products described in the submitted notification (as described below) and subsequently authorized by the FTZ Board.

Production under FTZ procedures could exempt GE Appliances from customs duty payments on the foreign status components used in export production. On its domestic sales, GE Appliances would be able to choose the duty rate during customs entry procedures that applies to electric hot water heaters (free) for the foreign status inputs noted below. Customs duties also could possibly be deferred or reduced on foreign status production equipment.

Components sourced from abroad include: Articles of rubber (*e.g.,* containers, caps/lids, knobs, dampeners), fan motors, fans, filter/dryers, expansion valves, accumulators, parts of electric water heaters, capacitors, sensors, switches, electronic controllers/panels/consoles/boards, anodes, wiring harnesses, and thermistors (duty rate ranges from free to 4.7%).

Public comment is invited from interested parties. Submissions shall be addressed to the Board's Executive Secretary at the address below. The closing period for their receipt is March 13, 2013.

A copy of the notification will be available for public inspection at the Office of the Executive Secretary, Foreign-Trade Zones Board, Room 21013, U.S. Department of Commerce, 1401 Constitution Avenue NW., Washington, DC 20230–0002, and in the ''Reading Room'' section of the Board's Web site, which is accessible via *www.trade.gov/ftz.*

For further information, contact Pierre Duy at *Pierre.Duy@trade.gov*, or (202) 482–1378.

Dated: January 25, 2013.

Andrew McGilvray,

Executive Secretary.

[FR Doc. 2013–02201 Filed 1–31–13; 8:45 am]

BILLING CODE P

DEPARTMENT OF COMMERCE

Foreign-Trade Zones Board

[B–8–2013]

Foreign-Trade Zone 129—Bellingham, WA; Notification of Proposed Production Activity; T.C. Trading Company, Inc. (Eyeglass Assembly and Kitting); Blaine, WA

The Port of Bellingham, grantee of FTZ 129, submitted a notification of proposed production activity on behalf of T.C. Trading Company, Inc. (T.C. Trading), located in Blaine, Washington. The notification conforming to the requirements of the regulations of the Board (15 CFR 400.22) was received on January 17, 2013.

A separate application for subzone status at the company facility was submitted and will be processed under Section 400.31 of the Board's regulations. The facility is used for the assembly and kitting of eyeglasses and eyeglass products. Pursuant to 15 CFR 400.14(b)4 of the regulations, FTZ activity would be limited to the specific foreign-status materials and components and specific finished products described in the submitted notification (as described below) and subsequently authorized by the FTZ Board.

Production under FTZ procedures could exempt T.C. Trading from customs duty payments on the foreign status components used in export production. On its domestic sales, T.C. Trading would be able to choose the duty rates during customs entry procedures that apply to eyeglasses (duty rate 2.5%) for the foreign status inputs noted below. Customs duties also could possibly be deferred or reduced on foreign status production equipment.

The components and materials sourced from abroad include plastic eyeglass lenses, plastic eyeglass frames, metal eyeglass frames, eyeglass repair kits and plastic eyeglass cases (duty rate ranges from free to 20%).

Public comment is invited from interested parties. Submissions shall be addressed to the Board's Executive Secretary at the address below. The closing period for their receipt is March 13, 2013.

A copy of the notification will be available for public inspection at the Office of the Executive Secretary, Foreign-Trade Zones Board, Room 21013, U.S. Department of Commerce, 1401 Constitution Avenue NW., Washington, DC 20230–0002, and in the ''Reading Room'' section of the Board's Web site, which is accessible via *www.trade.gov/ftz.*

For further information, contact Christopher Kemp at *Christopher.Kemp@trade.gov* or (202) 482–0862.

Dated: January 25, 2013.

Andrew McGilvray,

Executive Secretary.

[FR Doc. 2013–02204 Filed 1–31–13; 8:45 am]

BILLING CODE P

DEPARTMENT OF COMMERCE

International Trade Administration

[A–533–810]

Stainless Steel Bar From India: Preliminary Results of Antidumping Duty Administrative Review; 2011–2012

AGENCY: Import Administration, International Trade Administration, Department of Commerce.

SUMMARY: The Department of Commerce (the Department) is conducting an administrative review of the antidumping duty order on stainless steel bar (SSB) from India. The period of review (POR) is February 1, 2011, through January 31, 2012. This review covers one exporter/producer of the subject merchandise, Ambica Steels Limited (Ambica). We preliminarily find that subject merchandise has not been sold at less than normal value (NV) during this POR. We are also rescinding this review for one other producer/exporter, Mukand, Ltd. (Mukand). We invite interested parties to comment on these preliminary results.

DATES: *Effective Date:* February 1, 2013.

FOR FURTHER INFORMATION CONTACT: Joseph Shuler or David Layton, AD/CVD Operations, Office 1, Import Administration, International Trade Administration, U.S. Department of Commerce, 14th Street and Constitution Avenue NW., Washington DC 20230; telephone (202) 482–1293 or (202) 482–0371, respectively.

SUPPLEMENTARY INFORMATION:

Scope of the Order

The merchandise subject to the order is SSB. The SSB subject to the order is currently classifiable under subheadings 7222.10.00, 7222.11.00, 7222.19.00, 7222.20.00, 7222.30.00 of the Harmonized Tariff Schedule of the United States (HTSUS). The HTSUS subheadings are provided for convenience and customs purposes. A full description of the scope of the order is contained in the memorandum from Christian Marsh, Deputy Assistant Secretary for Antidumping and Countervailing Duty Operations, to Paul

Piquado, Assistant Secretary for Import Administration, ''Decision Memorandum for Preliminary Results of Antidumping Duty Administrative Review: Stainless Steel Bar from India'' dated concurrently with this notice (''Preliminary Decision Memorandum''), which is hereby adopted by this notice. The written description is dispositive.

The Preliminary Decision Memorandum is a public document and is on file electronically *via* Import Administration's Antidumping and Countervailing Duty Centralized Electronic Service System (''IA ACCESS''). Access to IA ACCESS is available to registered users at *http://iaaccess.trade.gov* and is available to all parties in the Central Records Unit, room 7046 of the main Department of Commerce building. In addition, a complete version of the Preliminary Decision Memorandum can be accessed directly on the Internet at *http://www.trade.gov/ia/.* The signed Preliminary Decision Memorandum and the electronic versions of the Preliminary Decision Memorandum are identical in content.

Partial Rescission of Administrative Review

Pursuant to 19 CFR 351.213(d)(1), we are rescinding this administrative review with respect to Mukand because Carpenter Technology Corporation, Crucible Industries LLC, and Valbruna Slater Stainless, Inc., (collectively, Petitioners) timely withdrew their request for review and no other party requested a review of Mukand.

Methodology

The Department has conducted this review in accordance with Section 751(a)(2) of the Tariff Act of 1930, as amended (the Act). Export Price is calculated in accordance with section 772(a) of the Act. Normal value is calculated in accordance with section 773 of the Act. In accordance with section 773(b) of the Act, we disregarded certain of Ambica's sales in the home market that were made at below-cost prices. For a full description of the methodology underlying our conclusion, please see the Preliminary Decision Memorandum.

Preliminary Results of the Review

As a result of this review, we preliminarily determine the following dumping margin for the period February 1, 2011, through January 31, 2012.

Exporter/Manufacturer	*Margin*
Ambica Steels Limited	0.00 percent.

Disclosure and Public Comment

The Department intends to disclose to interested parties the calculations performed in connection with these preliminary results within five days of the date of publication of this notice.[1] Pursuant to 19 CFR 351.309(c), interested parties may submit case briefs no later than 30 days after the date of publication of this notice. Rebuttal briefs, limited to issues raised in the case briefs, may be filed no later than five days after the date for filing case briefs.[2] Parties who submit case briefs or rebuttal briefs in this proceeding are encouraged to submit with each argument: (1) A statement of the issue; (2) a brief summary of the argument; and (3) a table of authorities.[3] Case and rebuttal briefs should be filed using IA Access.[4]

Pursuant to 19 CFR 351.310(c), interested parties who wish to request a hearing, or to participate if one is requested, must submit a written request to the Assistant Secretary for Import Administration, filed electronically via IA ACCESS. An electronically filed document must be received successfully in its entirety by the Departments electronic records system, IA ACCESS, by 5 p.m. Eastern Standard Time within 30 days after the date of publication of this notice.[5] Requests should contain: (1) The party's name, address, and telephone number; (2) the number of participants; and (3) a list of issues to be discussed. Issues raised in the hearing will be limited to those raised in the respective case briefs. If a request for a hearing is made, parties will be notified of the date and time for the hearing to be held at the U.S. Department of Commerce, 1401 Constitution Avenue NW., Washington, DC 20230.

The Department intends to issue the final results of this administrative review, including the results of its analysis of the issues raised in any written briefs, within 120 days after the date of publication of this notice, pursuant to section 751(a)(3)(A) of the Act.

Assessment Rates

The Department will determine, and CBP shall assess, antidumping duties on all appropriate entries in accordance with 19 CFR 351.212(b)(1).[6] The Department intends to issue appropriate assessment instructions to CBP 15 days after publication of the final results of review.

For Mukand, antidumping duties shall be assessed at rates equal to the cash deposit of estimated antidumping duties required at the time of entry, or withdrawal from warehouse, for consumption, in accordance with 19 CFR 351.212(c)(1)(i).

Ambica reported the name of the importer of record and the entered value for some of its sales to the United States during the POR. Pursuant to 19 CFR 351.212(b)(1), for these sales, if Ambica's weighted-average dumping margin is above *de minimis* (*i.e.,* 0.50 percent) in the final results of this review, we will calculate importer-specific assessment rates based on the ratio of the total amount of antidumping duties calculated for the examined sales to the total entered value of those sales. Where Ambica did not report entered value, we will calculate importer-specific assessment rates for the merchandise in question by aggregating the dumping margins calculated for all U.S. sales to each importer and dividing this amount by the total quantity of those sales.

The Department clarified its ''automatic assessment'' regulation on May 6, 2003. This clarification will apply to entries of subject merchandise during the POR produced by Ambica for which it did not know its merchandise was destined for the United States. In such instances, we will instruct CBP to liquidate un-reviewed entries at the all-others rate if there is no rate for the intermediate company(ies) involved in the transaction. For a full discussion of this clarification, see *Antidumping and Countervailing Duty Proceedings: Assessment of Antidumping Duties,* 68 FR 23954 (May 6, 2003).

Cash Deposit Requirements

The following deposit requirements will be effective upon publication of the notice of final results of administrative review for all shipments of SSB from India entered, or withdrawn from warehouse, for consumption on or after the date of publication as provided by section 751(a)(2) of the Act: (1) The cash deposit rate for Ambica will be the rate established in the final results of this administrative review; (2) for merchandise exported by manufacturers or exporters not covered in this review but covered in a prior segment of the

[1] *See* 19 CFR 351.224(b).

[2] *See* 19 CFR 351.309(d).

[3] *See* 19 CFR 351.309(c)(2) and (d)(2).

[4] *See* 19 CFR 351.303.

[5] *See* 19 CFR 351.310(c).

[6] In these preliminary results, the Department applied the assessment rate calculation method adopted in *Antidumping Proceedings: Calculation of the Weighted-Average Dumping Margin and Assessment Rate in Certain Antidumping Proceedings: Final Modification,* 77 FR 8101 (February 14, 2012).

proceeding, the cash deposit rate will continue to be the company-specific rate published for the most recent period;

(3) if the exporter is not a firm covered in this review, a prior review, or the original investigation but the manufacturer is, the cash deposit rate will be the rate established for the most recent period for the manufacturer of the merchandise; (4) the cash deposit rate for all other manufacturers or exporters will continue to be 12.45 percent, the all-others rate established in *Notice of Final Determination of Sales at Less Than Fair Value: Stainless Steel Bar from India,* 59 FR 66915, 66921 (December 28, 1994). These cash deposit requirements, when imposed, shall remain in effect until further notice.

Notification to Importers

This notice also serves as a preliminary reminder to importers of their responsibility under 19 CFR 351.402(f)(2) to file a certificate regarding the reimbursement of antidumping duties prior to liquidation of the relevant entries during this review period. Failure to comply with this requirement could result in the Secretary's presumption that reimbursement of antidumping duties occurred and the subsequent assessment of double antidumping duties.

We are issuing and publishing these results in accordance with sections 751(a)(1) and 777(i)(1) of the Act.

Dated: January 24, 2013.

Paul Piquado,

Assistant Secretary for Import Administration.

Appendix I

List of Topics Discussed in the Preliminary Decision Memorandum

Summary
- Background
- Partial Rescission

Scope of the Order
Discussion of the Methodology
- Fair Value Comparisons
- Product Comparisons
- Date of Sale
- Export Price
- Level of Trade
- Analysis of Home Market Sales Level of Trade
- Analysis of U.S. Sales Level of Trade
- Level of Trade Determination
- Normal Value
- Home Market Viability as Comparison Market
- Cost of Production Analysis
- Calculation of Cost of Production
- Test of Comparison Market Sales Prices
- Results of the COP Test
- Calculation of Normal Value Based on Comparison Market Prices
- Calculation of Normal Value Based on Constructed Value
- Currency Conversion

[FR Doc. 2013–02216 Filed 1–31–13; 8:45 am]

BILLING CODE 3510–DS–P

DEPARTMENT OF COMMERCE

International Trade Administration

Antidumping or Countervailing Duty Order, Finding, or Suspended Investigation; Advance Notification of Sunset Reviews

AGENCY: Import Administration, International Trade Administration, Department of Commerce.

Background

Every five years, pursuant to section 751(c) of the Tariff Act of 1930, as amended (''the Act''), the Department of Commerce (''the Department'') and the International Trade Commission automatically initiate and conduct a review to determine whether revocation of a countervailing or antidumping duty order or termination of an investigation suspended under section 704 or 734 of the Act would be likely to lead to continuation or recurrence of dumping or a countervailable subsidy (as the case may be) and of material injury.

Upcoming Sunset Reviews for March 2013

The following Sunset Reviews are scheduled for initiation in March 2013 and will appear in that month's Notice of Initiation of Five-Year Sunset Review.

Antidumping Duty Proceedings

Persulfates from China (A–570–847) (3rd Review)

Department Contact

Jennifer Moats (202) 482–5047

Countervailing Duty Proceedings

No Sunset Review of countervailing duty orders is scheduled for initiation in March 2013.

Suspended Investigations

No Sunset Review of suspended investigations is scheduled for initiation in March 2013.

The Department's procedures for the conduct of Sunset Reviews are set forth in 19 CFR 351.218. Guidance on methodological or analytical issues relevant to the Department's conduct of Sunset Reviews is set forth in the Department's Policy Bulletin 98.3—*Policies Regarding the Conduct of Five-Year (''Sunset'') Reviews of Antidumping and Countervailing Duty Orders; Policy Bulletin,* 63 FR 18871 (April 16, 1998). The Notice of Initiation of Five-Year (''Sunset'') Reviews provides further information regarding what is required of all parties to participate in Sunset Reviews.

Pursuant to 19 CFR 351.103(c), the Department will maintain and make available a service list for these proceedings. To facilitate the timely preparation of the service list(s), it is requested that those seeking recognition as interested parties to a proceeding contact the Department in writing within 10 days of the publication of the Notice of Initiation.

Please note that if the Department receives a Notice of Intent to Participate from a member of the domestic industry within 15 days of the date of initiation, the review will continue. Thereafter, any interested party wishing to participate in the Sunset Review must provide substantive comments in response to the notice of initiation no later than 30 days after the date of initiation.

This notice is not required by statute but is published as a service to the international trading community.

Dated: January 11, 2013.

Christian Marsh,

Deputy Assistant Secretary for Antidumping and Countervailing Duty Operations.

[FR Doc. 2013–02223 Filed 1–31–13; 8:45 am]

BILLING CODE 3510–DS–P

DEPARTMENT OF COMMERCE

International Trade Administration

Antidumping or Countervailing Duty Order, Finding, or Suspended Investigation; Opportunity to Request Administrative Review

AGENCY: Import Administration, International Trade Administration, Department of Commerce.

FOR FURTHER INFORMATION CONTACT: Brenda E. Waters, Office of AD/CVD Operations, Customs Unit, Import Administration, International Trade Administration, U.S. Department of Commerce, 14th Street and Constitution Avenue NW, Washington, DC 20230, telephone: (202) 482–4735.

Background

Each year during the anniversary month of the publication of an antidumping or countervailing duty order, finding, or suspended investigation, an interested party, as defined in section 771(9) of the Tariff Act of 1930, as amended (''the Act''), may request, in accordance with 19 CFR 351.213, that the Department of Commerce (''the Department'') conduct an administrative review of that antidumping or countervailing duty

order, finding, or suspended investigation.

All deadlines for the submission of comments or actions by the Department discussed below refer to the number of calendar days from the applicable starting date.

Respondent Selection

In the event the Department limits the number of respondents for individual examination for administrative reviews initiated pursuant to requests made for the orders identified below, the Department intends to select respondents based on U.S. Customs and Border Protection (''CBP'') data for U.S. imports during the period of review. We intend to release the CBP data under Administrative Protective Order (''APO'') to all parties having an APO within five days of publication of the initiation notice and to make our decision regarding respondent selection within 21 days of publication of the initiation **Federal Register** notice. Therefore, we encourage all parties interested in commenting on respondent selection to submit their APO applications on the date of publication of the initiation notice, or as soon thereafter as possible. The Department invites comments regarding the CBP data and respondent selection within five days of placement of the CBP data on the record of the review.

In the event the Department decides it is necessary to limit individual examination of respondents and conduct respondent selection under section 777A(c)(2) of the Act:

In general, the Department has found that determinations concerning whether particular companies should be ''collapsed'' (*i.e.,* treated as a single entity for purposes of calculating antidumping duty rates) require a substantial amount of detailed information and analysis, which often require follow-up questions and analysis. Accordingly, the Department will not conduct collapsing analyses at the respondent selection phase of this review and will not collapse companies at the respondent selection phase unless there has been a determination to collapse certain companies in a previous segment of this antidumping proceeding (*i.e.,* investigation, administrative review, new shipper review or changed circumstances review). For any company subject to this review, if the Department determined, or continued to treat, that company as collapsed with others, the Department will assume that such companies continue to operate in the same manner and will collapse them for respondent selection purposes. Otherwise, the Department will not collapse companies for purposes of respondent selection. Parties are requested to (a) identify which companies subject to review previously were collapsed, and (b) provide a citation to the proceeding in which they were collapsed. Further, if companies are requested to complete the Quantity and Value Questionnaire for purposes of respondent selection, in general each company must report volume and value data separately for itself. Parties should not include data for any other party, even if they believe they should be treated as a single entity with that other party. If a company was collapsed with another company or companies in the most recently completed segment of this proceeding where the Department considered collapsing that entity, complete quantity and value data for that collapsed entity must be submitted.

Deadline for Withdrawal of Request for Administrative Review

Pursuant to 19 CFR 351.213(d)(1), a party that has requested a review may withdraw that request within 90 days of the date of publication of the notice of initiation of the requested review. The regulation provides that the Department may extend this time if it is reasonable to do so. In order to provide parties additional certainty with respect to when the Department will exercise its discretion to extend this 90-day deadline, interested parties are advised that, with regard to reviews requested on the basis of anniversary months on or after February 2013, the Department does not intend to extend the 90-day deadline unless the requestor demonstrates that an extraordinary circumstance has prevented it from submitting a timely withdrawal request. Determinations by the Department to extend the 90-day deadline will be made on a case-by-case basis.

The Department is providing this notice on its Web site, as well as in its ''Opportunity to Request Administrative Review'' notices, so that interested parties will be aware of the manner in which the Department intends to exercise its discretion in the future.

Opportunity to Request a Review: Not later than the last day of February 2013,[1] interested parties may request administrative review of the following orders, findings, or suspended investigations, with anniversary dates in February for the following periods:

	Period of review
Antidumping Duty Proceedings	
BRAZIL:	
Frozen Warmwater Shrimp A–351–838	2/1/12–1/31/13
Stainless Steel Bar A–351–825	2/1/12–1/31/13
FRANCE: Uranium A–427–818	2/1/12–1/31/13
INDIA:	
Certain Cut-To-Length Carbon-Quality Steel Plate A–533–817	2/1/12–1/31/13
Certain Preserved Mushrooms A–533–813	2/1/12–1/31/13
Frozen Warmwater Shrimp A–533–840	2/1/12–1/31/13
Stainless Steel Bar A–533–810	2/1/12–1/31/13
INDONESIA:	
Certain Cut-To-Length Carbon-Quality Steel Plate A–560–805	2/1/12–1/31/13
Certain Preserved Mushrooms A–560–802	2/1/12–1/31/13
ITALY: Stainless Steel Butt-Weld Pipe Fittings A–475–828	2/1/12–1/31/13
JAPAN:	
Carbon Steel Butt-Weld Pipe Fittings A–588–602	2/1/12–1/31/13
Stainless Steel Bar A–588–833	2/1/12–1/31/13
MALAYSIA: Stainless Steel Butt-Weld Pipe Fittings A–557–809	2/1/12–1/31/13
PHILIPPINES: Stainless Steel Butt-Weld Pipe Fittings A–565–801	2/1/12–1/31/13
REPUBLIC OF KOREA: Certain Cut-To-Length Carbon-Quality Steel Plate A–580–836	2/1/12–1/31/13

[1] Or the next business day, if the deadline falls on a weekend, federal holiday or any other day when the Department is closed.

	Period of review
SOCIALIST REPUBLIC OF VIETNAM: Frozen Warmwater Shrimp A–522–802	2/1/12–1/31/13
THAILAND: Frozen Warmwater Shrimp A–549–822	2/1/12–1/31/13
THE PEOPLE'S REPUBLIC OF CHINA:	
Certain Preserved Mushrooms A–570–851	2/1/12–1/31/13
Frozen Warmwater Shrimp A–570–893	2/1/12–1/31/13
Heavy Forged Hand Tools, With or Without Handles A–570–803	2/1/12–1/31/13
Small Diameter Graphite Electrodes A–570–929	2/1/12–1/31/13
Uncovered Innerspring Units A–570–928	2/1/12–1/31/13
Countervailing Duty Proceedings	
INDIA:	
Certain Cut-To-Length Carbon-Quality Steel Plate C–533–818	1/1/12–12/31/12
Prestressed Concrete Steel Wire Strand C–533–829	1/1/12–12/31/12
INDONESIA: Certain Cut-To-Length Carbon-Quality Steel Plate C–560–806	1/1/12–12/31/12
REPUBLIC OF KOREA: Certain Cut-To-Length Carbon-Quality Steel Plate C–580–837	1/1/12–12/31/12
Suspension Agreements	
None.	

In accordance with 19 CFR 351.213(b), an interested party as defined by section 771(9) of the Act may request in writing that the Secretary conduct an administrative review. For both antidumping and countervailing duty reviews, the interested party must specify the individual producers or exporters covered by an antidumping finding or an antidumping or countervailing duty order or suspension agreement for which it is requesting a review. In addition, a domestic interested party or an interested party described in section 771(9)(B) of the Act must state why it desires the Secretary to review those particular producers or exporters.[2] If the interested party intends for the Secretary to review sales of merchandise by an exporter (or a producer if that producer also exports merchandise from other suppliers) which were produced in more than one country of origin and each country of origin is subject to a separate order, then the interested party must state specifically, on an order-by-order basis, which exporter(s) the request is intended to cover.

Please note that, for any party the Department was unable to locate in prior segments, the Department will not accept a request for an administrative review of that party absent new information as to the party's location. Moreover, if the interested party who files a request for review is unable to locate the producer or exporter for which it requested the review, the interested party must provide an explanation of the attempts it made to locate the producer or exporter at the same time it files its request for review, in order for the Secretary to determine if the interested party's attempts were reasonable, pursuant to 19 CFR 351.303(f)(3)(ii).

As explained in *Antidumping and Countervailing Duty Proceedings: Assessment of Antidumping Duties,* 68 FR 23954 (May 6, 2003), the Department has clarified its practice with respect to the collection of final antidumping duties on imports of merchandise where intermediate firms are involved. The public should be aware of this clarification in determining whether to request an administrative review of merchandise subject to antidumping findings and orders. *See also* the Import Administration Web site at *http://trade.gov/ia.*

All requests must be filed electronically in Import Administration's Antidumping and Countervailing Duty Centralized Electronic Service System (''IA ACCESS'') on the IA ACCESS Web site at *http://iaaccess.trade.gov. See Antidumping and Countervailing Duty Proceedings: Electronic Filing Procedures; Administrative Protective Order Procedures,* 76 FR 39263 (July 6, 2011). Further, in accordance with 19 CFR 351.303(f)(l)(i), a copy of each request must be served on the petitioner and each exporter or producer specified in the request.

The Department will publish in the **Federal Register** a notice of ''Initiation of Administrative Review of Antidumping or Countervailing Duty Order, Finding, or Suspended Investigation'' for requests received by the last day of February 2013. If the Department does not receive, by the last day of February 2013, a request for review of entries covered by an order, finding, or suspended investigation listed in this notice and for the period identified above, the Department will instruct CBP to assess antidumping or countervailing duties on those entries at a rate equal to the cash deposit of (or bond for) estimated antidumping or countervailing duties required on those entries at the time of entry, or withdrawal from warehouse, for consumption and to continue to collect the cash deposit previously ordered.

For the first administrative review of any order, there will be no assessment of antidumping or countervailing duties on entries of subject merchandise entered, or withdrawn from warehouse, for consumption during the relevant provisional-measures ''gap'' period, of the order, if such a gap period is applicable to the period of review.

This notice is not required by statute but is published as a service to the international trading community.

Dated: January 18, 2013.

Christian Marsh,

Deputy Assistant Secretary for Antidumping and Countervailing Duty Operations.

[FR Doc. 2013–02224 Filed 1–31–13; 8:45 am]

BILLING CODE 3510–DS–P

[2] If the review request involves a non-market economy and the parties subject to the review request do not qualify for separate rates, all other exporters of subject merchandise from the non-market economy country who do not have a separate rate will be covered by the review as part of the single entity of which the named firms are a part.

DEPARTMENT OF COMMERCE

International Trade Administration

Application(s) for Duty-Free Entry of Scientific Instruments

Pursuant to Section 6(c) of the Educational, Scientific and Cultural Materials Importation Act of 1966 (Pub. L. 89–651, as amended by Pub. L. 106–36; 80 Stat. 897; 15 CFR part 301), we invite comments on the question of whether instruments of equivalent scientific value, for the purposes for which the instruments shown below are intended to be used, are being manufactured in the United States.

Comments must comply with 15 CFR 301.5(a)(3) and (4) of the regulations and be postmarked on or before February 21,

2013. Address written comments to Statutory Import Programs Staff, Room 3720, U.S. Department of Commerce, Washington, DC 20230. Applications may be examined between 8:30 a.m. and 5:00 p.m. at the U.S. Department of Commerce in Room 3720.

Docket Number: 12–064. *Applicant:* University of Pittsburgh, 4200 Fifth Ave., Pittsburgh, PA 15260. *Instrument:* Dilution Refrigerator with 18T Solenoid Superconducting Magnet. *Manufacturer:* Leiden Cryogenics, the Netherlands. *Intended Use:* The instrument will be used for three purposes: To develop ways for preserving quantum information in a way that is immune to a wide variety of decoherence mechanisms by using predicted topological properties of superconductors in two dimensions, to program fundamental couplings at near-atomic scales and quantum simulation of ''metasuperconductors'' by using the extreme nanoscale precision with which the $LaAlO_3/SrTiO_3$ interface can be gated, and to develop new mechanisms for the transfer of quantum information between long-lived localized states (nitrogen-vacancy centers) and delocalized states (superconducting resonators). The experiments will combine the unique local control capable with the $LaAlO_3/SrTiO_3$ interface with the natural tendency of $SrTiO_3$ to become superconducting to develop superconducting structures with vortices that will be manipulated to achieve topologically protected quantum computation, as well as electrostatic programming of the $LaAlO_3/SrTiO_3$ interface with V(x,y) to create new electronic states of matter which themselves can become superconducting. The unique properties of this instrument are the capability of cooling the sample below the superconducting transition temperature (Tc~200mK), to apply large magnetic fields (>18T) to investigate the large spin-orbit present in these samples (Bso~15T), and the ability to orient the sample in any orientation relative to the magnetic fields. *Justification for Duty-Free Entry:* There are no instruments of the same general category manufactured in the United States. *Application accepted by Commissioner of Customs:* December 13, 2012.

Docket Number: 12–066. *Applicant:* University of Pittsburgh, 4200 Fifth Ave., Pittsburgh, PA 15260. *Instrument:* mK Scanning Probe Microscope. Manufacturer: Nanomagnetics, Turkey. *Intended Use:* The instrument will be used for three purposes: To develop ways for preserving quantum information in a way that is immune to a wide variety of decoherence mechanisms, by using predicted topological properties of superconductors in two dimensions, to program fundamental couplings at near-atomic scales and quantum simulation of ''metasuperconductors'' by using the extreme nanoscale precision with which the $LaAlO_3/SrTiO_3$ interface can be gated, and to develop new mechanisms for the transfer of quantum information between long-lived localized states (nitrogen-vacancy centers) and delocalized states (superconducting resonators). The experiments will combine the unique local control capable with the $LaAlO_3/SrTiO_3$ interface with the natural tendency of $SrTiO_3$ to become superconducting to develop superconducting structures with vortices that will be manipulated to achieve topologically protected quantum computation, as well as electrostatic programming of the $LaAlO_3/SrTiO_3$ interface with V(x,y) to create new electronic states of matter which themselves can become superconducting. The unique properties of this instrument are the capability of scanning probe microscopy at base temperature (T<50mK), and to locally (on nanometer scales) gate, modify, and probe nanowire devices and quantum dot arrays. *Justification for Duty-Free Entry:* There are no instruments of the same general category manufactured in the United States. *Application accepted by Commissioner of Customs:* December 13, 2012.

Docket Number: 13–002. *Applicant:* University of California, Berkeley, Stanley Hall, Room B306, Berkeley, CA, 94720. *Instrument:* High Speed Atomic Force Microscope (HSAFM). Manufacturer: Research Institute of Biomolecule Metrology (RIBM), Japan. *Intended Use:* The instrument will be used for a number of experiments including tracking the enzymatic activity of an RNA II polymerase along its template, a DNA gene, while synthesizing the messenger RNA. Having access to higher scan rates in an aqueous environment will provide an unprecedented view of transcription through nucleosomal DNA. By visualizing transcription steps, it is possible to precisely follow in real time the dynamics of events that accompany transcription by RNAP II through the nucleosome including spontaneous DNA unwrapping from the core particle, histone transfer, and histone dissociation under different conditions while determining the main factors that regulate nucleosome stability/instability during transcription. In addition to this capability, the instrument will have the time and spatial resolution to visualize individual tubulin subunits as they arrive at the microtubule end and will complement cryo-EM studies at near nanometer resolution on stabilized intermediates in the assembly process. The unique characteristics of this instrument are the ability to capture images at a rate of up to 15–20 frames per second, reading scan rates as high as 25 frames per second, resonant frequencies of 3.5 MHz in air and 1.2 MHz in water, spring constants of 0.2 N m^{-1}, a quality factor in water of ~2, and a response time in water of ~0.5 microseconds. *Justification for Duty-Free Entry:* There are no instruments of the same general category manufactured in the United States. *Application accepted by Commissioner of Customs:* January 17, 2013.

Dated: January 25, 2013.

Gregory W. Campbell,

Director of Subsidies Enforcement, Import Administration.

[FR Doc. 2013–02132 Filed 1–31–13; 8:45 am]

BILLING CODE 3510–DS–P

DEPARTMENT OF COMMERCE

International Trade Administration

Initiation of Five-Year (''Sunset'') Review

AGENCY: Import Administration, International Trade Administration, Department of Commerce.

SUMMARY: In accordance with section 751(c) of the Tariff Act of 1930, as amended (''the Act''), the Department of Commerce (''the Department'') is automatically initiating five-year reviews (''Sunset Reviews'') of the antidumping duty orders listed below. The International Trade Commission (''the Commission'') is publishing concurrently with this notice its notice of *Institution of Five-Year Review* which covers the same orders.

DATES: *Effective Date:* February 1, 2013.

FOR FURTHER INFORMATION CONTACT: The Department official identified in the *Initiation of Review* section below at AD/CVD Operations, Import Administration, International Trade Administration, U.S. Department of Commerce, 14th Street and Constitution Avenue NW., Washington, DC 20230. For information from the Commission contact Mary Messer, Office of Investigations, U.S. International Trade Commission at (202) 205–3193.

SUPPLEMENTARY INFORMATION:

Background

The Department's procedures for the conduct of Sunset Reviews are set forth

in its *Procedures for Conducting Five-Year (''Sunset'') Reviews of Antidumping and Countervailing Duty Orders,* 63 FR 13516 (March 20, 1998) and 70 FR 62061 (October 28, 2005). Guidance on methodological or analytical issues relevant to the Department's conduct of Sunset Reviews is set forth in the Department's Policy Bulletin 98.3—*Policies Regarding the Conduct of Five-Year (''Sunset'') Reviews of Antidumping and Countervailing Duty Orders: Policy Bulletin,* 63 FR 18871 (April 16, 1998), and in *Antidumping Proceedings: Calculation of the Weighted-Average Dumping Margin and Assessment Rate in Certain Antidumping Duty Proceedings; Final Modification,* 77 FR 8101 (February 14, 2012).

Initiation of Review

In accordance with 19 CFR 351.218(c), we are initiating Sunset Reviews of the following antidumping duty orders:

DOC Case No.	ITC Case No.	Country	Product	Department contact
A–570–908	731–TA–110	China	Sodium Hexametaphosphate (1st Review)	Jennifer Moats (202) 482–5047.

Filing Information

As a courtesy, we are making information related to Sunset proceedings, including copies of the pertinent statue and Department's regulations, the Department schedule for Sunset Reviews, a listing of past revocations and continuations, and current service lists, available to the public on the Department's Internet Web site at the following address: *http://ia.ita.doc.gov/sunset/.* All submissions in these Sunset Reviews must be filed in accordance with the Department's regulations regarding format, translation, and service of documents. These rules, including electronic filing requirements via Import Administration's Antidumping and Countervailing Duty Centralized Electronic Service System (''IA ACCESS''), can be found at 19 CFR 351.303. *See also Antidumping and Countervailing Duty Proceedings: Electronic Filing Procedures; Administrative Protective Order Procedures,* 76 FR 39263 (July 6, 2011).

This notice serves as a reminder that any party submitting factual information in an AD/CVD proceeding must certify to the accuracy and completeness of that information. *See* section 782(b) of the Act. Parties are hereby reminded that revised certification requirements are in effect for company/government officials as well as their representatives in all AD/CVD investigations or proceedings initiated on or after March 14, 2011. *See Certification of Factual Information to Import Administration During Antidumping and Countervailing Duty Proceedings: Interim Final Rule,* 76 FR 7491 (February 10, 2011) (''*Interim Final Rule*'') amending 19 CFR 351.303(g)(1) and (2) and supplemented by *Certification of Factual Information To Import Administration During Antidumping and Countervailing Duty Proceedings: Supplemental Interim Final Rule,* 76 FR 54697 (September 2, 2011). The formats for the revised certifications are provided at the end of the *Interim Final Rule.* The Department intends to reject factual submissions if the submitting party does not comply with the revised certification requirements.

Pursuant to 19 CFR 351.103(d), the Department will maintain and make available a service list for these proceedings. To facilitate the timely preparation of the service list(s), it is requested that those seeking recognition as interested parties to a proceeding contact the Department in writing within 10 days of the publication of the Notice of Initiation.

Because deadlines in Sunset Reviews can be very short, we urge interested parties to apply for access to proprietary information under administrative protective order (''APO'') immediately following publication in the **Federal Register** of this notice of initiation by filing a notice of intent to participate. The Department's regulations on submission of proprietary information and eligibility to receive access to business proprietary information under APO can be found at 19 CFR 351.304–306.

Information Required From Interested Parties

Domestic interested parties defined in section 771(9)(C), (D), (E), (F), and (G) of the Act and 19 CFR 351.102(b) wishing to participate in a Sunset Review must respond not later than 15 days after the date of publication in the **Federal Register** of this notice of initiation by filing a notice of intent to participate. The required contents of the notice of intent to participate are set forth at 19 CFR 351.218(d)(1)(ii). In accordance with the Department's regulations, if we do not receive a notice of intent to participate from at least one domestic interested party by the 15-day deadline, the Department will automatically revoke the order without further review. *See* 19 CFR 351.218(d)(1)(iii).

If we receive an order-specific notice of intent to participate from a domestic interested party, the Department's regulations provide that all parties wishing to participate in a Sunset Review must file complete substantive responses not later than 30 days after the date of publication in the **Federal Register** of this notice of initiation. The required contents of a substantive response, on an order-specific basis, are set forth at 19 CFR 351.218(d)(3). Note that certain information requirements differ for respondent and domestic parties. Also, note that the Department's information requirements are distinct from the Commission's information requirements. Please consult the Department's regulations for information regarding the Department's conduct of Sunset Reviews.[1] Please consult the Department's regulations at 19 CFR Part 351 for definitions of terms and for other general information concerning antidumping and countervailing duty proceedings at the Department.

This notice of initiation is being published in accordance with section 751(c) of the Act and 19 CFR 351.218(c).

Dated: January 11, 2013.

Christian Marsh,

Deputy Assistant Secretary for Antidumping and Countervailing Duty Operations.

[FR Doc. 2013–02226 Filed 1–31–13; 8:45 am]

BILLING CODE 3510–DS–P

[1] In comments made on the interim final sunset regulations, a number of parties stated that the proposed five-day period for rebuttals to substantive responses to a notice of initiation was insufficient. This requirement was retained in the final sunset regulations at 19 CFR 351.218(d)(4). As provided in 19 CFR 351.302(b), however, the Department will consider individual requests to extend that five-day deadline based upon a showing of good cause.

DEPARTMENT OF COMMERCE

National Oceanic and Atmospheric Administration

Proposed Information Collection; Comment Request; Paperwork Submissions Under the Coastal Zone Management Act Federal Consistency Requirements

AGENCY: National Oceanic and Atmospheric Administration (NOAA), Commerce.

ACTION: Notice.

SUMMARY: The Department of Commerce, as part of its continuing effort to reduce paperwork and respondent burden, invites the general public and other Federal agencies to take this opportunity to comment on proposed and/or continuing information collections, as required by the Paperwork Reduction Act of 1995.

DATES: Written comments must be submitted on or before April 2, 2013.

ADDRESSES: Direct all written comments to Jennifer Jessup, Departmental Paperwork Clearance Officer, Department of Commerce, Room 6616, 14th and Constitution Avenue NW., Washington, DC 20230 (or via the Internet at *JJessup@doc.gov*).

FOR FURTHER INFORMATION CONTACT: Requests for additional information or copies of the information collection instrument and instructions should be directed to David Kaiser, 603–862–2719 or *David.Kaiser@noaa.gov.*

SUPPLEMENTARY INFORMATION:

I. Abstract

This request is for extension of a currently approved information collection.

A number of paperwork submissions are required by the Coastal Zone Management Act (CZMA) federal consistency provision, 16 U.S.C. 1456, and by NOAA to provide a reasonable, efficient and predictable means of complying with CZMA requirements. The requirements are detailed in 15 CFR part 930. The information will be used by coastal states with federally-approved Coastal Zone Management Programs to determine if Federal agency activities, Federal license or permit activities, and Federal assistance activities that affect a state's coastal zone are consistent with the states' programs. Information will also be used by NOAA and the Secretary of Commerce for appeals to the Secretary by non-federal applicants regarding State CZMA objections to federal license or permit activities.

II. Method of Collection

Respondents have a choice of either electronic or paper forms. Methods of submittal include email of electronic forms, and mail and facsimile transmission of paper forms.

III. Data

OMB Control Number: 0648–0411.

Form Number: None.

Type of Review: Regular submission (extension of a currently approved collection).

Affected Public: State, local, or tribal government; business or other for-profit organizations; individuals or households.

Estimated Number of Respondents: 2,334.

Estimated Time Per Response: Applications/certifications and state preparation of objection or concurrence letters, 8 hours each; state requests for review of unlisted activities, 4 hours; public notices, 1 hour; remedial action and supplemental review, 6 hours; listing notices, 1 hour; interstate listing notices, 30 hours; mediation, 2 hours; appeals to the Secretary of Commerce, 210 hours.

Estimated Total Annual Burden Hours: 35,799.

Estimated Total Annual Cost to Public: $9,024 in recordkeeping/reporting costs.

IV. Request for Comments

Comments are invited on: (a) Whether the proposed collection of information is necessary for the proper performance of the functions of the agency, including whether the information shall have practical utility; (b) the accuracy of the agency's estimate of the burden (including hours and cost) of the proposed collection of information; (c) ways to enhance the quality, utility, and clarity of the information to be collected; and (d) ways to minimize the burden of the collection of information on respondents, including through the use of automated collection techniques or other forms of information technology.

Comments submitted in response to this notice will be summarized and/or included in the request for OMB approval of this information collection; they also will become a matter of public record.

Dated: January 28, 2013.

Gwellnar Banks,

Management Analyst, Office of the Chief Information Officer.

[FR Doc. 2013–02146 Filed 1–31–13; 8:45 am]

BILLING CODE 3510–22–P

DEPARTMENT OF COMMERCE

National Oceanic and Atmospheric Administration

RIN 0648–XC430

Small Takes of Marine Mammals Incidental to Specified Activities; Cape Wind's High Resolution Survey in Nantucket Sound, MA

AGENCY: National Marine Fisheries Service (NMFS), National Oceanic and Atmospheric Administration (NOAA), Commerce.

ACTION: Notice; proposed incidental harassment authorization; request for comments.

SUMMARY: NMFS has received an application from Cape Wind Associates (CWA) for an Incidental Harassment Authorization (IHA) to take marine mammals, by harassment, incidental to pre-construction high resolution survey activities. CWA began pre-construction activities last year, but was unable to complete the entire survey. Pursuant to the Marine Mammal Protection Act (MMPA), NMFS is requesting comments on its proposal to issue a second IHA to CWA to incidentally take, by Level B harassment only, marine mammals during the specified activity.

DATES: Comments and information must be received no later than March 4, 2013.

ADDRESSES: Comments on the application and this proposal should be addressed to Michael Payne, Chief, Permits and Conservation Division, Office of Protected Resources, National Marine Fisheries Service, 1315 East-West Highway, Silver Spring, MD 20910–3225. The mailbox address for providing email comments is *ITP.Magliocca@noaa.gov.* NMFS is not responsible for email comments sent to addresses other than the one provided here. Comments sent via email, including all attachments, must not exceed a 10-megabyte file size.

Instructions: All comments received are a part of the public record and will generally be posted to *http://www.nmfs.noaa.gov/pr/permits/incidental.htm* without change. All Personal Identifying Information (for example, name, address, etc.) voluntarily submitted by the commenter may be publicly accessible. Do not submit Confidential Business Information or otherwise sensitive or protected information.

A copy of the application containing a list of the references used in this document may be obtained by visiting the internet at: *http://www.nmfs.noaa.gov/pr/permits/incidental.htm.* The following associated documents are also

available at the same internet address: 2011 Environmental Assessment. Documents cited in this notice may also be viewed, by appointment, during regular business hours, at the aforementioned address.

FOR FURTHER INFORMATION CONTACT: Michelle Magliocca, Office of Protected Resources, NMFS, (301) 427–8401.

SUPPLEMENTARY INFORMATION:

Background

Sections 101(a)(5)(A) and (D) of the MMPA (16 U.S.C. 1361 *et seq.*) direct the Secretary of Commerce to allow, upon request, the incidental, but not intentional, taking of small numbers of marine mammals by U.S. citizens who engage in a specified activity (other than commercial fishing) within a specific geographical region if certain findings are made and either regulations are issued or, if the taking is limited to harassment, a notice of a proposed authorization is provided to the public for review.

Authorization for incidental takings shall be granted if NMFS finds that the taking will have a negligible impact on the species or stock(s), will not have an unmitigable adverse impact on the availability of the species or stock(s) for subsistence uses (where relevant), and if the permissible methods of taking and requirements pertaining to the mitigation, monitoring, and reporting of such takings are set forth. NMFS has defined ''negligible impact'' in 50 CFR 216.103 as ''* * * an impact resulting from the specified activity that cannot be reasonably expected to, and is not reasonably likely to, adversely affect the species or stock through effects on annual rates of recruitment or survival.''

Section 101(a)(5)(D) of the MMPA established an expedited process by which citizens of the U.S. can apply for a 1-year authorization to incidentally take small numbers of marine mammals by harassment, provided that there is no potential for serious injury or mortality to result from the activity. Section 101(a)(5)(D) establishes a 45-day time limit for NMFS review of an application followed by a 30-day public notice and comment period on any proposed authorizations for the incidental harassment of marine mammals. Within 45 days of the close of the comment period, NMFS must either issue or deny the authorization.

Except with respect to certain activities not pertinent here, the MMPA defines ''harassment'' as: Any act of pursuit, torment, or annoyance which (i) has the potential to injure a marine mammal or marine mammal stock in the wild [Level A harassment]; or (ii) has the potential to disturb a marine mammal or marine mammal stock in the wild by causing disruption of behavioral patterns, including, but not limited to, migration, breathing, nursing, breeding, feeding, or sheltering [Level B harassment].

Summary of Request

On December 19, 2012, NMFS received an application from CWA for the taking of marine mammals incidental to high resolution survey activities. NMFS determined that the application was adequate and complete on December 31, 2012.

CWA proposes to conduct a high resolution geophysical survey in Nantucket Sound, Massachusetts. The proposed activity would occur during daylight hours over an estimated 109-day period beginning in April 2013. The following equipment used during the survey is likely to result in the take of marine mammals: Shallow-penetration subbottom profiler and medium-penetration subbottom profiler. Take, by Level B harassment only, of individuals of five species is anticipated to result from the specified activity. This request is basically an extension of the request made in April 2011 for survey activities that were not completed under the previous IHA. CWA is not proposing to change their survey activities in any way. However, the geotechnical portion of the survey was completed in 2012 and would not be continued during the 2013 season.

Description of the Specified Activity

CWA proposes to conduct a high resolution geophysical survey in order to acquire remote-sensing data around Horseshoe Shoal which would be used to characterize resources at or below the seafloor. The purpose of the survey would be to identify any submerged cultural resources that may be present and to generate additional data describing the geological environment within the survey area. The survey would satisfy the mitigation and monitoring requirements for ''cultural resources and geology'' in the environmental stipulations of the Bureau of Ocean Energy Management, Regulation, and Enforcement's lease. The survey is part of the first phase of a larger Cape Wind energy project, which involves the installation of 130 wind turbine generators on Horseshoe Shoal over a 2-year period. The survey would collect data along predetermined track lines using a towed array of instrumentation, which would include a side scan sonar, magnetometer, shallow-penetration subbottom profiler, multibeam depth sounder, and medium-penetration subbottom profiler. The proposed high resolution geophysical survey activities would not result in any disturbance to the sea floor.

Dates and Duration

Survey activities are necessary prior to construction of the wind turbine array and are scheduled to begin in the spring of 2013, continuing on a daily basis for up to five months. Survey vessels would operate during daytime hours only and CWA estimates that one survey vessel would cover about 17 Nautical miles (31 kilometers) of track line per day. Therefore, CWA conservatively estimates that survey activities would take 109 days (28 days less than what was expected under the 2012 IHA). However, if more than one survey vessel is used, the survey duration would be considerably shorter. NMFS is proposing to issue an authorization that extends from April 1, 2013, to March 31, 2014.

Location

Survey vessels are expected to depart from Falmouth Harbor, Massachusetts, or another nearby harbor on Cape Cod. In total, the survey would cover approximately 110 square kilometers (km^2). This area includes the future location of the wind turbine generators—an area about 8.4 km from Point Gammon, 17.7 km from Nantucket Island, and 8.9 km from Martha's Vineyard—and cables connecting the wind park to the mainland. The survey area within the wind park would be transited by survey vessels towing specialized equipment along primary track lines and perpendicular tie lines. Preliminary survey designs include primary track lines with northwest-southeast orientations and assume 30-meter (m) line spacing. Preliminary survey designs also call for tie lines to likely run in a west-east orientation covering targeted areas of the construction footprint where wind turbine generators would be located. The survey area along the interconnecting submarine cable route includes a construction and anchoring corridor, as part of the wind farm's area of potential effect. The total track line distance covered during the survey is estimated to be about 3,432 km (as opposed to the 4,292 km included in the 2012 IHA).

Multiple survey vessels may operate within the survey area and would travel at about 3 knots during data acquisition and approximately 15 knots during transit between the survey area and port. If multiple vessels are used at the same time, they would be far enough apart that sounds from the chirp and

boomer would not overlap. The survey vessels would acquire data continuously throughout the survey area during the day and terminate survey activities before dark, prior to returning to port. NMFS believes that the likelihood of a survey vessel striking a marine mammal is low considering the low marine mammal densities within Nantucket Sound, the relatively short distance from port to the survey site, the limited number of vessels, and the small vessel size. Vessel sounds during survey activities would result from propeller cavitations, propeller singing, propulsion, flow noise from water dragging across the hull, and bubbles breaking in the wake. The dominant sound source from vessels would be from propeller cavitations; however, sounds resulting from survey vessel activity are considered to be no louder than the existing ambient sound levels and sound generated from regular shipping and boating activity in Nantucket Sound (MMS, 2009).

NMFS expects that acoustic stimuli resulting from the operation of the survey equipment have the potential to harass marine mammals. Background information on the characteristics and measurement of sound are provided later in this document. The dominant sources of sound during the proposed survey activities would be from the towed equipment used to gather seafloor data. Two of the seismic survey devices used during the high resolution geophysical survey emit sounds within the hearing range of marine mammals in Nantucket Sound: Shallow-penetration and medium-penetration subbottom profilers (known as a ''chirp'' and ''boomer,'' respectively). CWA would use a chirp to provide high resolution data of the upper 15 m of sea bottom. An EdgeTech 216S or similar model would be used. The chirp would be towed near the center of the survey vessel directly adjacent to the gunwale of the boat, about 1 to 1.5 m beneath the water's surface. Sources such as the chirp are considered non-impulsive, intermittent (as opposed to continuous) sounds. The frequency range for this instrument is generally 2 to 16 kilohertz (kHz)—a range audible by all marine mammal species in Nantucket Sound. The estimated sound pressure level at the source would be 201 dB re 1 μPa at 1 m with a typical pulse length of 32 milliseconds and a pulse repetition rate of 4 per second. NMFS does not consider the chirp to be a continuous sound source (best represented by vibratory pile driving or drilling). CWA would use a boomer to obtain deeper resolution of geologic layering that cannot be imaged by the chirp. An AP3000 (dual plate) boomer, or similar model would be used. The boomer would be towed about 3 to 5 m behind the survey vessel's stern at the water's surface. Unlike the chirp, the boomer emits an impulse sound, characterized by a relatively rapid rise-time to maximum pressure followed by a period of diminishing and oscillating pressures (Southall *et al.,* 2007). The boomer has a broad frequency range of 0.3 to 14 kHz—a range audible by all marine mammal species in Nantucket Sound. CWA performed sound source verification monitoring in 2012 on the type of chirp and boomer that would be used during the 2013 survey season. Underwater sound was recorded with two Autonomous Multichannel Acoustic Recorders, deployed 100 m apart, in the vicinity of the project area. The received 90-percent rms sound pressure levels (SPLs) from the subbottom profilers did not exceed 175 dB re 1uPa. The loudest source, the dual-plate boomer, produced a received 90-percent rms SPL of less than 140 dB re 1 uPa at a 500-m range. The distance to the 160-dB isopleth was 12 m for the dual-plate boomer and 10 m for the chirp.

Description of Marine Mammals in the Area of the Specified Activity

All marine mammals with possible or confirmed occurrence in the proposed activity area are listed in Table 1, along with their status under the Endangered Species Act (ESA) and MMPA. In general, large whales do not frequent Nantucket Sound, but they are discussed below because some species have been reported near the project vicinity.

TABLE 1—MARINE MAMMALS WITH POSSIBLE OR CONFIRMED OCCURRENCE IN THE PROPOSED ACTIVITY AREA

Common name	Scientific name	ESA status	MMPA status
Humpback whale	*Megaptera novaeangilae*	endangered	depleted.
Fin whale	*Balaenoptera physalus*	endangered	depleted.
North Atlantic right whale	*Eubaelena glacialis*	endangered	depleted.
Long-finned pilot whale	*Globicephalus melas.*		
Minke whale	*Balaenoptera acutorostrata.*		
Atlantic white-sided dolphin	*Lagenorhynchus acutus.*		
Striped dolphin	*Stellena coeruleoalba.*		
Common dolphin	*Delphinus delphis.*		
Harbor porpoise	*Phocoena phocoena.*		
Atlantic spotted dolphin	*Stenella frontalis.*		
Risso's dolphin	*Grampus griseus.*		
Dwarf and pygmy sperm whale	*Kogia spp..*		
Gray seal	*Halichoerus grypus.*		
Harbor seal	*Phoca vitulina.*		
Harp seal	*Phoca groenlandica.*		
Hooded seal	*Crystophora cristata.*		

Sightings data indicate that whales rarely visit Nantucket Sound and there are no sightings of large whales on Horseshoe Shoal. Since 2002, no humpback whales have been observed anywhere in Nantucket Sound and there are no documented occurrences of fin whales within Nantucket Sound. Right whales are considered rare in Nantucket Sound and have not been sighted on Horseshoe Shoal. All of the right whales observed in Nantucket Sound during 2010 quickly transited the area and there is no evidence of any persistent aggregations around the proposed project area. The best available science indicates that humpback whales, fin whales, and right whales—although present in the New England region—are rare in Nantucket Sound and transient individuals may be occasionally found 20 km from the proposed project area; this is likely due to the shallow depths of Nantucket Sound and its location outside of the coastal migratory corridor.

Likewise, sightings data shows no record of long-finned pilot whales, striped dolphins, Atlantic spotted dolphins, common dolphins, Risso's dolphins, *Kogia* species, harp seals, or hooded seals in Nantucket Sound, although these stocks exist in the New England region. Therefore, CWA is not requesting, nor is NMFS proposing, take for the aforementioned species.

Marine mammals with known occurrences in Nantucket Sound that could be harassed by high resolution geophysical survey activity in Nantucket Sound are listed in Table 2. These are the species for which take is being requested.

TABLE 2—MARINE MAMMALS THAT COULD BE IMPACTED BY SURVEY ACTIVITIES IN NANTUCKET SOUND

Common name	Scientific name	Abundance	Population status	Time of year in New England
Minke whale	*Balaenoptera actuorostrata*	8,987	stable	April through October.
Atlantic white-sided dolphin	*Lagenorhynchus acutus*	63,000	n/a	October through December.
Harbor porpoise	*Phocoena phocoena*	89,504	n/a	Year-round (peak Sept–Apr).
Gray seal	*Halichoerus grypis*	250,000	increasing	Year-round.
Harbor seal	*Phoca vitulina*	99,340	n/a	October through April.

Minke Whales

In the North Atlantic, minke whales are found from Canada to the Gulf of Mexico and concentrated in New England waters, particularly in the spring and summer months. Minke whales found in Nantucket Sound are part of the Canadian East Coast stock, which runs from the Davis Strait down to the Gulf of Mexico. The best available abundance estimate for this stock is 8,987 individuals. Sightings data indicate that minke whales prefer shallower waters when in the Cape Cod vicinity, but depths significantly greater than Nantucket Sound. Sightings per unit effort estimates for Nantucket Sound are 0.1 to 5.9 minke whales per 1,000 km of survey track for spring and summer. However, estimates may be biased due to heavier whale watching activities during those months. Minke whales are one of the most abundant whale species in the world and their population is considered stable throughout. The minke whale is not listed under the ESA nor considered strategic under the MMPA.

Atlantic White-Sided Dolphin

Atlantic white-sided dolphins are found in temperate and sub-polar waters of the North Atlantic, typically along the continental shelf and slope. In the western North Atlantic, they are found from North Carolina to Greenland. During summer months, Atlantic white-sided dolphins move north and closer to shore. Atlantic white-sided dolphins are rare in Nantucket Sound, but are found in deeper waters around Massachusetts and Rhode Island. In 2011, the estimated population size of the Western North Atlantic stock was about 23,390 animals. There is insufficient data to determine population trends, but Atlantic white-sided dolphins are not listed under the ESA, although they are considered strategic under the MMPA.

Harbor Porpoises

Harbor porpoises have a wide and discontinuous range that includes the North Atlantic and North Pacific. In the western North Atlantic, harbor porpoises are found from Greenland to Cape Hatteras, North Carolina. Harbor porpoises in U.S. waters are divided into 10 stocks, based on genetics, movement patterns, and management. Any harbor porpoises encountered during the proposed survey activities would be part of the Gulf of Maine/Bay of Fundy stock which has an estimated abundance of 89,054 animals and a minimum population estimate of 60,970 (NMFS, 2011c). They congregate around the Gulf of Maine during summer months, but are otherwise dispersed along the east coast. No trend analyses exist for this species. Harbor porpoises are not listed under the ESA although they are considered strategic under the MMPA.

Gray Seals

Gray seals inhabit temperate and sub-arctic waters. They are found from Maine to Long Island Sound, live on remote, exposed islands, shoals, and unstable sandbars, and are the second most common pinniped along the U.S. Atlantic coast. Three major populations exist in eastern Canada, northwestern Europe, and the Baltic Sea. The western North Atlantic stock is equivalent to the eastern Canada population and ranges from New York to Labrador. Pupping occurs on land or ice from late December through mid-February with peaks in mid-January. Muskeget Island (located between Martha's Vineyard and Nantucket Island) and Monomoy Island (at the eastern limit of Nantucket Sound) are the only gray seal breeding colonies in the U.S. and the southernmost gray seal breeding colonies in the world. These breeding colonies are about 24 km and 14 km from the proposed project site, respectively. Gray seals presently use the islands as areas to give birth and raise their pups. There is no defined migratory behavior for gray seals, so a large portion of the population may be present in Nantucket Sound year-round. Some adults move north during spring and summer, out of Nantucket Sound to the waters off Maine and Canada, but others have been observed in high abundance in Chatham Harbor, MA and other areas of lower Cape Cod during this time.

Incidental observations of seals were recorded during avian aerial surveys conducted independently by CWA and the Massachusetts Audubon Society. Between May 2002 and February 2004, CWA conducted about 46 aerial avian surveys in Nantucket Sound, with particular focus on Horseshoe Shoal. During this time, about 26,873 seals were observed throughout Nantucket Sound; about 56 of these were observed within the proposed project area over the three-year period. Current population numbers for the western North Atlantic stock are unknown, but some pup surveys suggest about 223,220 animals. Gray seal numbers are increasing in coastal waters between southern Massachusetts and eastern Long Island. Their abundance is likely increasing throughout the western Atlantic, but the rate of increase is unknown. Gray seals are not listed under the ESA, nor considered strategic under the MMPA.

Harbor Seals

Harbor seals, also known as common seals, are found throughout coastal waters of the Atlantic Ocean and considered the most abundant pinniped on the U.S. east coast. The best available estimate for the harbor seal population along the New England coast is 99,340 (NMFS, 2011f). They are most common around coastal islands, ledges, and sandbars above 30° N latitude and range

from the Arctic down to Nantucket Sound. Harbor seals are seasonal visitors to Massachusetts; breeding and pupping occur through the spring and summer in Maine and Canada. Harbor seals typically over-winter in Massachusetts, but some remain in southern New England year-round. No pupping areas have been identified in southern New England. Extensive sand spits off Muskeget Island and neighboring Tuckernuck and Skiff Islands have been identified as preferred haul-out spots for large numbers of harbor seals.

Harbor seal abundance estimates for Nantucket Sound are scarce. Barlas (1999) observed harbor seals on Cape Cod from October through April and saw abundance peak in March, with very few individuals using haul-out sites in Nantucket Sound. Waring (unpublished data, 2002) observed an increased abundance of harbor seals on Muskeget Island, Monomoy Island, and Tuckernuck Island in 1999 and 2000; however, harbor seals are not likely to be in the same area when gray seals are breeding.

Further information on the biology and local distribution of these species and others in the region can be found in CWA's application, which is available online at: *http://www.nmfs.noaa.gov/pr/permits/incidental.htm#applications,* and the NMFS Marine Mammal Stock Assessment Reports, which are available online at: *http://www.nmfs.noaa.gov/pr/species.*

Potential Effects of the Specified Activity on Marine Mammals

Use of subbottom profilers on Horseshoe Shoal may temporarily impact marine mammal behavior within the survey area due to elevated in-water sound levels. Marine mammals are continually exposed to many sources of sound. Naturally occurring sounds such as lightning, rain, sub-sea earthquakes, and biological sounds (for example, snapping shrimp, whale songs) are widespread throughout the world's oceans. Marine mammals produce sounds in various contexts and use sound for various biological functions including, but not limited to, (1) social interactions; (2) foraging; (3) orientation; and (4) predator detection. Interference with producing or receiving these sounds may result in adverse impacts. Audible distance, or received levels of sound depend on the nature of the sound source, ambient noise conditions, and the sensitivity of the receptor to the sound (Richardson *et al.,* 1995). Type and significance of marine mammal reactions to sound are likely dependent on a variety of factors including, but not limited to, (1) the behavioral state of the animal (for example, feeding, traveling, etc.); (2) frequency of the sound; (3) distance between the animal and the source; and (4) the level of the sound relative to ambient conditions (Southall *et al.,* 2007).

For background, sound is a physical phenomenon consisting of minute vibrations that travel through a medium, such as air or water, and is generally characterized by several variables. Frequency describes the sound's pitch and is measured in hertz (Hz) or kilohertz (kHz), while sound level describes the sound's intensity and is measured in decibels (dB). Sound level increases or decreases exponentially with each dB of change. The logarithmic nature of the scale means that each 10-dB increase is a 10-fold increase in acoustic power (and a 20-dB increase is then a 100-fold increase in power). A 10-fold increase in acoustic power does not mean that the sound is perceived as being 10 times louder, however. Sound levels are compared to a reference sound pressure (micro-Pascal) to identify the medium. For air and water, these reference pressures are ''re: 20 μPa'' and ''re: 1 μPa,'' respectively. Root mean square (RMS) is the quadratic mean sound pressure over the duration of an impulse. RMS is calculated by squaring all of the sound amplitudes, averaging the squares, and then taking the square root of the average (Urick, 1975). RMS accounts for both positive and negative values; squaring the pressures makes all values positive so that they may be accounted for in the summation of pressure levels (Hastings and Popper, 2005). This measurement is often used in the context of discussing behavioral effects, in part because behavioral effects, which often result from auditory cues, may be better expressed through averaged units rather than by peak pressures.

Cetaceans are divided into three functional hearing groups: Low-frequency, mid-frequency, and high-frequency. Minke whales are considered low-frequency cetaceans and their estimated auditory bandwidth (lower to upper frequency hearing cut-off) ranges from 7 Hz to 30 kHz. Atlantic white-sided dolphins are considered mid-frequency cetaceans and their estimated auditory bandwidth ranges from 150 Hz to 160 kHz. Lastly, harbor porpoises are considered high-frequency cetaceans and their estimated auditory bandwidth ranges from 200 Hz to 180 kHz. In contrast, pinnipeds are divided into two functional hearing groups: In-water and in-air. Pinnipeds in water have an estimated auditory bandwidth of 75 Hz to 75 kHz. There are no pinniped haul-outs close enough to the survey area to take in-air auditory bandwidths into consideration.

Hearing Impairment

Marine mammals may experience temporary or permanent hearing impairment when exposed to loud sounds. Hearing impairment is classified by temporary threshold shift (TTS) and permanent threshold shift (PTS). There are no empirical data for onset of PTS in any marine mammal; therefore, PTS-onset must be estimated from TTS-onset measurements and from the rate of TTS growth with increasing exposure levels above the level eliciting TTS-onset. PTS is presumed to be likely if the hearing threshold is reduced by ≥ 40 dB (that is, 40 dB of TTS). PTS is considered auditory injury (Southall *et al.,* 2007) and occurs in a specific frequency range and amount. Irreparable damage to the inner or outer cochlear hair cells may cause PTS; however, other mechanisms are also involved, such as exceeding the elastic limits of certain tissues and membranes in the middle and inner ears and resultant changes in the chemical composition of the inner ear fluids (Southall *et al.,* 2007). Due to proposed mitigation measures and source levels, NMFS does not expect marine mammals to be exposed to PTS levels during the proposed survey activities.

Temporary Threshold Shift (TTS)

TTS is the mildest form of hearing impairment that can occur during exposure to a loud sound (Kryter, 1985). While experiencing TTS, the hearing threshold rises and a sound must be stronger in order to be heard. At least in terrestrial mammals, TTS can last from minutes or hours to (in cases of strong TTS) days, can be limited to a particular frequency range, and can occur to varying degrees (i.e., a loss of a certain number of dBs of sensitivity). For sound exposures at or somewhat above the TTS threshold, hearing sensitivity in both terrestrial and marine mammals recovers rapidly after exposure to the noise ends.

Marine mammal hearing plays a critical role in communication with conspecifics and in interpretation of environmental cues for purposes such as predator avoidance and prey capture. Depending on the degree (elevation of threshold in dB), duration (i.e., recovery time), and frequency range of TTS and the context in which it is experienced, TTS can have effects on marine mammals ranging from discountable to serious. For example, a marine mammal may be able to readily compensate for a brief, relatively small amount of TTS

in a non-critical frequency range that takes place during a time when the animals is traveling through the open ocean, where ambient noise is lower and there are not as many competing sounds present. Alternatively, a larger amount and longer duration of TTS sustained during a time when communication is critical for successful mother/calf interactions could have more serious impacts if it were in the same frequency band as the necessary vocalizations and of a severity that it impeded communication. The fact that animals exposed to levels and durations of sound that would be expected to result in this physiological response would also be expected to have behavioral responses of a comparatively more severe or sustained nature is also notable and potentially of more importance than the simple existence of a TTS.

Recent literature highlights the inherent complexity of predicting TTS onset in marine mammals, as well as the importance of considering exposure duration when assessing potential impacts (Mooney *et al.,* 2009a, 2009b; Kastak *et al.,* 2007). Generally, with sound exposures of equal energy, quieter sounds (lower SPL) of longer duration were found to induce TTS onset more than louder sounds (higher SPL) of shorter duration (more similar to subbottom profilers). For intermittent sounds, less threshold shift will occur than from a continuous exposure with the same energy (some recovery will occur between intermittent exposures) (Kryter *et al.,* 1966; Ward, 1997). For sound exposures at or somewhat above the TTS-onset threshold, hearing sensitivity recovers rapidly after exposure to the sound ends. Southall *et al.* (2007) considers a 6 dB TTS (that is, baseline thresholds are elevated by 6 dB) to be a sufficient definition of TTS-onset. NMFS considers TTS as Level B harassment that is mediated by physiological effects on the auditory system; however, NMFS does not consider TTS-onset to be the lowest level at which Level B harassment may occur. Southall *et al.* (2007) summarizes underwater pinniped data from Kastak *et al.* (2005), indicating that a tested harbor seal showed a TTS of around 6 dB when exposed to a nonpulse noise at sound pressure level 152 dB re: 1 μPa for 25 minutes.

Some studies suggest that harbor porpoises may be more sensitive to sound than other odontocetes (Lucke *et al.,* 2009; Kastelein *et al.,* 2011). While TTS onset may occur in harbor porpoises at lower received levels (when compared to other odontocetes), NMFS 160-dB threshold criteria are based on the onset of behavioral harassment, not the onset of TTS. The potential for TTS is considered within NMFS' analysis of potential impacts from Level B harassment.

Behavioral Disturbance

Behavioral responses to sound are highly variable and context-specific. An animal's perception of and response to (in both nature and magnitude) an acoustic event can be influenced by prior experience, perceived proximity, bearing of the sound, familiarity of the sound, etc. (Southall *et al.,* 2007). If a marine mammal does react briefly to an underwater sound by changing its behavior or moving a small distance, the impacts of the change are unlikely to be significant to the individual, let alone the stock or population. However, if a sound source displaces marine mammals from an important feeding or breeding area for a prolonged period, impacts on individuals and populations could be significant (*e.g.,* Lusseau and Bejder, 2007; Weilgart, 2007). Given the many uncertainties in predicting the quantity and types of impacts of noise on marine mammals, it is common practice to estimate how many mammals would be present within a particular distance of activities and/or exposed to a particular level of sound. In most cases, this approach likely overestimates the numbers of marine mammals that would be affected in some biologically-important manner.

The studies that address responses of low-frequency cetaceans (such as the minke whale) to non-pulse sounds include data gathered in the field and related to several types of sound sources (of varying similarity to chirps), including: Vessel noise, drilling and machinery playback, low-frequency M-sequences (sine wave with multiple phase reversals) playback, tactical low-frequency active sonar playback, drill ships, and non-pulse playbacks. These studies generally indicate no (or very limited) responses to received levels in the 90 to 120 dB re: 1μPa range and an increasing likelihood of avoidance and other behavioral effects in the 120 to 160 dB range. As mentioned earlier, though, contextual variables play a very important role in the reported responses and the severity of effects are not linear when compared to received level. Also, few of the laboratory or field datasets had common conditions, behavioral contexts, or sound sources, so it is not surprising that responses differ.

The studies that address responses of mid-frequency cetaceans (such as Atlantic white-sided dolphins) to non-pulse sounds include data gathered both in the field and the laboratory and related to several different sound sources (of varying similarity to chirps) including: Pingers, drilling playbacks, ship and ice-breaking noise, vessel noise, Acoustic harassment devices (AHDs), Acoustic Deterrent Devices (ADDs), mid-frequency active sonar, and non-pulse bands and tones. Southall *et al.* (2007) were unable to come to a clear conclusion regarding the results of these studies. In some cases animals in the field showed significant responses to received levels between 90 and 120 dB, while in other cases these responses were not seen in the 120 to 150 dB range. The disparity in results was likely due to contextual variation and the differences between the results in the field and laboratory data (animals typically responded at lower levels in the field).

The studies that address responses of high-frequency cetaceans (such as the harbor porpoise) to non-pulse sounds include data gathered both in the field and the laboratory and related to several different sound sources (of varying similarity to chirps), including: Pingers, AHDs, and various laboratory non-pulse sounds. All of these data were collected from harbor porpoises. Southall *et al.* (2007) concluded that the existing data indicate that harbor porpoises are likely sensitive to a wide range of anthropogenic sounds at low received levels (around 90 to 120 dB), at least for initial exposures. All recorded exposures above 140 dB induced profound and sustained avoidance behavior in wild harbor porpoises (Southall *et al.,* 2007). Rapid habituation was noted in some but not all studies.

The studies that address the responses of pinnipeds in water to non-pulse sounds include data gathered both in the field and the laboratory and related to several different sound sources (of varying similarity to chirps), including: AHDs, various non-pulse sounds used in underwater data communication, underwater drilling, and construction noise. Few studies exist with enough information to include them in the analysis. The limited data suggest that exposures to non-pulse sounds between 90 and 140 dB generally do not result in strong behavioral responses of pinnipeds in water, but no data exist at higher received levels (Southall *et al.,* 2007).

Southall *et al.* (2007) also addressed behavioral responses of marine mammals to impulse sounds. The studies that address the responses of low-frequency cetaceans to impulse sounds include data gathered in the field and related to two sound sources: Airguns and explosions. The onset of

significant behavioral disturbance varied between 120 and 160 dB, depending on species. The studies that address the responses of mid-frequency cetaceans to impulse sounds include data gathered both in the field and the laboratory and related to several different sound sources (of varying similarity to boomers), including: Small explosives, airgun arrays, pulse sequences, and natural and artificial pulses. The data show no clear indication of increasing probability and severity of response with increasing received level. Behavioral responses seem to vary depending on species and stimuli. Data on behavioral responses of high-frequency cetaceans to multiple pulses is not available. Although individual elements of some non-pulse sources (such as pingers) could be considered pulses, it is believed that some mammalian auditory systems perceive them as non-pulse sounds (Southall *et al.,* 2007).

The studies that address the responses of pinnipeds in water to impulse sounds include data gathered in the field and related to several different sources (of varying similarity to boomers), including: Small explosives, impact pile driving, and airgun arrays. Quantitative data on reactions of pinnipeds to impulse sounds is limited, but a general finding is that exposures in the 150 to 180 dB range generally have limited potential to induce avoidance behavior (Southall *et al.,* 2007).

Any impacts to marine mammal behavior are expected to be temporary. Animals may avoid the area around the survey vessels, thereby reducing exposure. Any disturbance to marine mammals is likely to be in the form of temporary avoidance or alteration of opportunistic foraging behavior near the survey location. In addition, because protected species observers would be monitoring a 500-m exclusion zone (much larger than the 30-m, 180-dB isopleth in which Level A harassment could occur), marine mammal injury or mortality is not anticipated. The protected species observers would be on watch to stop survey activities, a mitigation measure designed to prevent animals from being exposed to injurious level sounds. For these reasons, any changes to marine mammal behavior are expected to be temporary and result in a negligible impact to affected species and stocks.

Anticipated Effects on Habitat

There is no anticipated impact on marine mammal habitat from the proposed survey activities. The high resolution geophysical survey equipment would not come in contact with the seafloor and would not be a source of air or water pollution. Marine mammals may avoid the survey area temporarily due to ensonification, but survey activities are not expected to result in long-term abandonment of marine mammal habitat. A negligible area of seafloor would be temporarily disturbed during the collection of geotechnical data.

Overall, the proposed activity is not expected to cause significant impacts on marine mammal habitat or marine mammal prey species in the proposed survey area. Therefore, NMFS has preliminarily determined impacts to marine mammal habitat are negligible.

Proposed Mitigation

In order to issue an incidental take authorization under section 101(a)(5)(D) of the MMPA, NMFS must, where applicable, set forth the permissible methods of taking pursuant to such activity, and other means of effecting the least practicable impact on such species or stock and its habitat, paying particular attention to rookeries, mating grounds, and areas of similar significance, and on the availability of such species or stock for taking for subsistence uses where relevant.

CWA proposed, with NMFS' guidance, the following mitigation measures to help ensure the least practicable adverse impact on marine mammals:

Establishment of an Exclusion Zone

During all survey activities involving the shallow-penetration and medium-penetration subbottom profilers, CWA would establish a 500-m radius exclusion zone around each survey vessel. This area would be monitored for marine mammals 60 minutes (as stipulated by the BOEMRE lease) prior to starting or restarting surveys, and during surveys, and 60 minutes after survey equipment has been turned off. Typically, the exclusion zone is based on the area in which marine mammals could be exposed to injurious (Level A) levels of sound. CWA's lease specifies a 500-m exclusion zone, which exceeds both the estimated Level A and Level B isopleths for marine mammal harassment. CWA's proposed exclusion zone would minimize impacts to marine mammals from increased sound exposures. The exclusion zone must not be obscured by fog or poor lighting conditions.

Shut Down and Delay Procedures

If a protected species observer sees a marine mammal within or approaching the exclusion zone prior to the start of surveying, the observer would notify the appropriate individual who would then be required to delay surveying until the marine mammal moves outside of the exclusion zone or if the animal has not been resighted for 60 minutes. If a protected species observer sees a marine mammal within or approaching the exclusion zone during survey activities, the observer would notify the appropriate individual who would then be required to shut down surveying until the marine mammal moves outside of the exclusion zone or if the animal has not been resighted for 60 minutes.

Soft-start Procedures

A ''soft-start'' technique would be used at the beginning of survey activities each day (or following a shut down) to allow any marine mammal that may be in the immediate area to leave before the sound sources reach full energy. Surveys shall not commence at nighttime or when the exclusion zone cannot be effectively monitored.

NMFS has carefully evaluated the applicant's proposed mitigation measures and considered a range of other measures in the context of ensuring that NMFS prescribes the means of effecting the least practicable adverse impact on the affected marine mammal species and stocks and their habitat. Our evaluation of potential measures included consideration of the following factors in relation to one another:

- The manner in which, and the degree to which, the successful implementation of the measure is expected to minimize adverse impacts to marine mammals;
- The proven or likely efficacy of the specific measure to minimize adverse impacts as planned; and
- The practicability of the measure for applicant implementation, including consideration of personnel safety, and practicality of implementation.

Based on our evaluation of the applicant's proposed measures, as well as other measures considered by NMFS, NMFS has preliminarily determined that the proposed mitigation measures provide the means of effecting the least practicable adverse impacts on marine mammals species or stocks and their habitat, paying particular attention to rookeries, mating grounds, and areas of similar significance.

Proposed Monitoring and Reporting

In order to issue an incidental take statement for an activity, section 101(a)(5)(D) of the MMPA states that NMFS must set forth, where applicable, ''requirements pertaining to the monitoring and reporting of such taking.'' The MMPA implementing

regulations at 50 CFR 216.104(a)(13) indicate that requests for incidental take authorizations must include the suggested means of accomplishing the necessary monitoring and reporting that will result in increased knowledge of the species and of the level of taking or impacts on populations of marine mammals that are expected to be present in the proposed action area.

Visual Monitoring

CWA would designate at least one biologically-trained, on-site individual, approved in advance by NMFS, to monitor the area for marine mammals 60 minutes before, during, and 60 minutes after all survey activities and call for shut down if any marine mammal is observed within or approaching the designated 500-m exclusion zone. Should a marine mammal not included in an incidental take authorization be observed at any time within the 500-m exclusion zone, shut down and delay procedures would be followed.

CWA would also provide additional monitoring efforts that would result in increased knowledge of marine mammal species in Nantucket Sound. At least one NMFS-approved protected species observer would conduct behavioral monitoring from the survey vessel for two days for every 14 days of survey activity to estimate take and evaluate the behavioral impacts that survey activities have on marine mammals outside of the 500-m exclusion zone. In addition, CWA would also send out an additional vessel with a NMFS-approved protected species observer to collect data on species presence and behavior before surveys begin and once a month during survey activities.

Protected species observers would be provided with the equipment necessary to effectively monitor for marine mammals (for example, high-quality binoculars, compass, and range-finder) in order to determine if animals have entered into the harassment isopleths and to record marine mammal sighting information. Protected species observers must be able to effectively monitor the 500-m exclusion zone whenever the subbottom profilers are in use. Survey efforts would only take place during daylight hours and visibility must not be obscured by fog, lighting conditions, etc.

CWA would submit a report to NMFS within 90 days of expiration of the IHA or completion of surveying, whichever comes first. The report would provide full documentation of methods, results, and interpretation pertaining to all monitoring. More specifically, the report would include the following information when a marine mammal is sighted:

- Dates, times, locations, heading, speed, weather, sea conditions (including Beaufort sea state and wind force), and associated activities during all survey operations and marine mammal sightings;
- Species, number, location, distance from the vessel, and behavior of any marine mammals, as well as associated survey activity (number of shut-downs or delays), observed throughout all monitoring activities;
- An estimate of the number (by species) of marine mammals that are known to have been exposed to the survey activity (based on visual observation) at received levels greater than or equal to 160 dB re 1 uPa (rms) and/or 180 dB re 1 uPa (rms) for cetaceans and 190 dB re 1 uPa (rms) for pinnipeds with a discussion of any specific behaviors those individuals exhibited; and
- A description of the implementation and effectiveness of the mitigation measures of the IHA.

In the unanticipated event that the specified activity clearly causes the take of a marine mammal in a manner prohibited by the IHA, such as an injury (Level A harassment), serious injury, or mortality (e.g., ship-strike, gear interaction, and/or entanglement), CWA would immediately cease the specified activities and report the incident to the Chief of the Permits and Conservation Division, Office of Protected Resources, NMFS, at 301–427–8401 and/or by email to *Michael.Payne@noaa.gov* and *ITP.Magliocca@noaa.gov* and the Northeast Regional Stranding Coordinator at 978–281–9300 (*Mendy.Garron@noaa.gov*). The report must include the following information:

- Time, date, and location (latitude/longitude) of the incident;
- Name and type of vessel involved;
- Vessel's speed during and leading up to the incident;
- Description of the incident;
- Status of all sound source use in the 24 hours preceding the incident;
- Water depth;
- Environmental conditions (e.g., wind speed and direction, Beaufort sea state, cloud cover, and visibility);
- Description of all marine mammal observations in the 24 hours preceding the incident;
- Species identification or description of the animal(s) involved;
- Fate of the animal(s); and
- Photographs or video footage of the animal(s) (if equipment is available).

Activities would not resume until NMFS is able to review the circumstances of the prohibited take. NMFS would work with CWA to determine what is necessary to minimize the likelihood of further prohibited take and ensure MMPA compliance. CWA may not resume their activities until notified by NMFS via letter, email, or telephone.

In the event that CWA discovers an injured or dead marine mammal, and the lead PSO determines that the cause of the injury or death is unknown and the death is relatively recent (i.e., in less than a moderate state of decomposition as described in the next paragraph), CWA would immediately report the incident to the Chief of the Permits and Conservation Division, Office of Protected Resources, NMFS, at 301–427–8401 and/or by email to *Michael.Payne@noaa.gov* and *ITP.Magliocca@noaa.gov* and the Northeast Regional Stranding Coordinator at 978–281–9300 (*Mendy.Garron@noaa.gov*). The report must include the same information identified in the paragraph above. Activities may continue while NMFS reviews the circumstances of the incident. NMFS would work with CWA to determine whether modifications in the activities are appropriate.

In the event that CWA discovers an injured or dead marine mammal, and the lead PSO determines that the injury or death is not associated with or related to the activities authorized in the IHA (e.g., previously wounded animal, carcass with moderate to advanced decomposition, or scavenger damage), CWA would report the incident to the Chief of the Permits and Conservation Division, Office of Protected Resources, NMFS, at 301–427–8401 and/or by email to *Michael.Payne@noaa.gov* and *ITP.Magliocca@noaa.gov* and the Northeast Regional Stranding Coordinator at 978–281–9300 (*Mendy.Garron@noaa.gov*), within 24 hours of the discovery. CWA would provide photographs or video footage (if available) or other documentation of the stranded animal sighting to NMFS.

Summary of Past Monitoring and Reporting

CWA complied with the requirements under their 2012 IHA. CWA completed 28 days and 459 nautical transect miles of survey activity during 2012 and no living marine mammals were sighted. On July 10, 2012, a deceased harbor seal was seen by two protected species observers and survey equipment was immediately shut down. The observers determined that the seal had been deceased for 24–48 hours, based on signs of scavenger damage and bloating, which suggest moderate decomposition (Pugliares *et al.,* 2007). Both observers

concurred that the animal was not injured due to survey activities; however, a 60-minute post watch was performed to ensure that no other protected species were in the vicinity. A full report was submitted to NMFS on July 11, 2012, within 24 hours of the initial sighting. No marine mammal takes were reported during the 2012 season. CWA's monitoring report is available online at: *http://www.nmfs.noaa.gov/pr/permits/incidental.htm#applications.*

Estimated Take by Incidental Harassment

Except with respect to certain activities not pertinent here, the MMPA defines ''harassment'' as: Any act of pursuit, torment, or annoyance which (i) has the potential to injure a marine mammal or marine mammal stock in the wild [Level A harassment]; or (ii) has the potential to disturb a marine mammal or marine mammal stock in the wild by causing disruption of behavioral patterns, including, but not limited to, migration, breathing, nursing, breeding, feeding, or sheltering [Level B harassment].

Based on CWA's application and NMFS' subsequent analysis, the impact of the described survey activities may result in, at most, short-term modification of behavior by small numbers of marine mammals within the action area. Marine mammals may avoid the area or change their behavior at time of exposure to elevated sound levels.

Current NMFS practice regarding exposure of marine mammals to anthropogenic sound is that in order to avoid the potential for injury of marine mammals (for example, PTS), cetaceans and pinnipeds should not be exposed to impulsive sounds of 180 and 190 dB re: 1 μPa or above, respectively. This level is considered precautionary as it is likely that more intense sounds would be required before injury would actually occur (Southall *et al.,* 2007). Potential for behavioral harassment (Level B) is considered to have occurred when marine mammals are exposed to sounds at or above 160 dB re: 1 μPa for impulse sounds and 120 dB re: 1 μPa for non-pulse noise, but below the aforementioned thresholds. These levels are also considered precautionary.

CWA estimated the number of potential takes resulting from survey activities by considering species density, the zone of influence, and duration of survey activities. More specifically, take estimates were calculated by multiplying the estimated species density values (n) measured in individuals per square kilometers, by the area of the zone of influence in km^2, times the total number of survey days (d = 109). The zone of influence was calculated as a function of the distance a survey vessel with deployed boomer would travel in one survey day and the area around the boomer where sound levels reach or exceed 160 dB. For consistency with the 2011 IHA, the take estimate is based on a zone of influence equal to 444 m (the initial estimate for the 160 dB isopleth for the boomer), although based on acoustic measurements taken at the beginning of the 2012 survey, the 160 dB isopleth is thought to be much smaller. This distance was applied consistently to all marine mammal species.

Estimated numbers of species potentially exposed to disturbing levels of sound from the boomer (the survey equipment with the largest 160 dB isopleth) were calculated for minke whales, Atlantic white-sided dolphins, harbor porpoises, gray seals, and harbor seals. These estimates were calculated by multiplying the low and high end of the ranges of species density by the boomer's zone of influence and the number of days of survey operation. CWA calculated seal density estimates based on aerial survey counts for seals observed swimming and/or foraging in open water within the activity area. CWA included an adjustment factor in these density calculations for seals not seen, but considered present during aerial surveys. Density estimates for seals based on haul out counts were not used due to the distance of haul outs from the activity area (about 20 km to Monomoy Island and 12 km to Muskeget Island). Gray seals and harbor seals congregating in these locations are not expected to hear sounds from the survey equipment at 160 dB or higher. The seals most likely to be exposed to potentially disturbing sounds are the individuals swimming and/or foraging within the zone of influence for the activated medium-penetration subbottom profiler.

CWA is requesting incidental take based on the highest estimated possible species exposures to potentially disturbing levels of sound from the boomer. No marine mammals are expected to be exposed to injurious levels of sound in excess of 180 dB during survey activities. CWA is requesting, and NMFS is proposing, Level B harassment of 9 minke whales, 185 Atlantic white-sided dolphins, 110 harbor porpoises, 314 gray seals, and 79 harbor seals. These numbers overestimate the number of animals likely to be taken because they are based on the highest density estimates and do not account for proposed mitigation measures (such as the 500-m exclusion zone, marine mammal monitoring, and ramp up procedures). These numbers indicate the maximum number of animals expected to occur within 444 m of the boomer. Estimated and proposed level of take of each species is less than one percent of each affected stock and therefore is considered small in relation to the stock estimates previously set forth.

Negligible Impact and Small Numbers Analysis and Determination

NMFS has defined ''negligible impact'' in 50 CFR 216.103 as ''* * *an impact resulting from the specified activity that cannot be reasonably expected to, and is not reasonably likely to, adversely affect the species or stock through effects on annual rates of recruitment or survival.'' In making a negligible impact determination, NMFS considers a number of factors which include, but are not limited to, number of anticipated injuries or mortalities (none of which would be authorized here), number, nature, intensity, and duration of Level B harassment, and the context in which takes occur (for instance, will the takes occur in an area or time of significance for marine mammals, or are takes occurring to a small, localized population?).

As described above, marine mammals would not be exposed to activities or sound levels which would result in injury (for instance, PTS), serious injury, or mortality. Anticipated impacts of survey activities on marine mammals are temporary behavioral changes due to avoidance of the area. All marine mammals in the vicinity of survey operations would be transient as no breeding, calving, pupping, or nursing areas, or haul-outs, overlap with the survey area. The closest pinniped haul-outs are about 20 km and 12 km away on Monomoy Island and Muskeget Island, respectively. Marine mammals approaching the survey area would likely be traveling or opportunistically foraging. The amount of take CWA requested, and NMFS proposes to authorize, is considered small (less than one percent) relative to the estimated populations of 8,987 minke whales, 23,390 Atlantic white-sided dolphins, 89,054 harbor porpoises, 250,000 gray seals, and 99,340 harbor seals. Furthermore, the amount of take CWA requested and NMFS proposes to authorize likely overestimates the actual take that would occur; no marine mammal takes were observed during 28 days of survey activity in 2012. No affected marine mammals are listed under the ESA and only the Atlantic white-sided dolphin and harbor porpoise are considered strategic under the MMPA. Marine mammals are

expected to avoid the survey area, thereby reducing exposure and impacts. No disruption to reproductive behavior is anticipated and there is no anticipated effect on annual rates of recruitment or survival of affected marine mammals.

Based on the analysis contained herein of the likely effects of the specified activity on marine mammals and their habitat, and taking into consideration the implementation of the mitigation and monitoring measures, NMFS preliminarily determines that CWA's survey activities would result in the incidental take of small numbers of marine mammals, by Level B harassment, and that the total taking would have a negligible impact on the affected species or stocks.

Impact on Availability of Affected Species for Taking for Subsistence Uses

There are no relevant subsistence uses of marine mammals implicated by this action.

Endangered Species Act (ESA)

No marine mammal species listed under the ESA are anticipated to occur within the action area. Therefore, section 7 consultation under the ESA is not required.

National Environmental Policy Act (NEPA)

In compliance with the National Environmental Policy Act of 1969 (42 U.S.C. 4321 *et seq.*), as implemented by the regulations published by the Council on Environmental Quality (40 CFR parts 1500–1508), and NOAA Administrative Order 216–6, NMFS prepared an Environmental Assessment (EA) to consider the direct, indirect, and cumulative effects to marine mammals and other applicable environmental resources resulting from issuance of a one-year IHA and the potential issuance of additional authorization for incidental harassment for the ongoing project in 2012. This analysis is still considered relevant for the proposed IHA because the applicant's proposed activity has not changed. This EA is available on the NMFS Web site listed in the beginning of this document.

Dated: January 29, 2013.

Helen M. Golde,

Acting Director, Office of Protected Resources, National Marine Fisheries Service.

[FR Doc. 2013–02195 Filed 1–31–13; 8:45 am]

BILLING CODE 3510–22–P

DEPARTMENT OF COMMERCE

National Oceanic and Atmospheric Administration

RIN 0648–XC470

Vessel Monitoring Systems (VMS); Certification of New VMS Unit for Use in Northeast Fisheries

AGENCY: National Marine Fisheries Service (NMFS), National Oceanic and Atmospheric Administration (NOAA), Commerce.

ACTION: Notice of VMS unit certification.

SUMMARY: NMFS announces the approval and certification of the CLS America Thorium VMS Terminal model 100 (TST–100) with Iridium satellite communications network for use in the northeastern United States in which VMS units are required.

DATES: This new TST–100 unit can be used effective January 24, 2013.

FOR FURTHER INFORMATION CONTACT: Office of Law Enforcement, Northeast Division, Northeast VMS Team, telephone 978–281–9213.

SUPPLEMENTARY INFORMATION: Regulations at 50 CFR 648.9 and 648.10 set forth VMS requirements for fisheries in the northeastern United States for the operation of VMS units used for reporting and monitoring. Specifically, 50 CFR 648.9 requires that minimum performance criteria published by the NMFS Office of Law Enforcement and any established Northeast regional standards must be met in order to be certified for use.

The Administrator, Northeast Region, NMFS, has reviewed all components of the TST–100 VMS unit and other information provided by the vendor and has certified the following unit for use in all Northeast fisheries in which VMS units are required: Thorium TST–100, available from CLS America, Inc., 4300 Forbes Blvd., Suite 110, Lanham, Maryland 20706, telephone (301) 925–4411, fax (301) 925–8995, email: *fishing@clsamerica.com.*

Authority: 16 U.S.C. 1801 et seq.

Dated: January 25, 2013.

Kara Meckley,

Acting Deputy Director, Office of Sustainable Fisheries, National Marine Fisheries Service.

[FR Doc. 2013–02131 Filed 1–31–13; 8:45 am]

BILLING CODE 3510–22–P

DEPARTMENT OF COMMERCE

United States Patent and Trademark Office

[Docket No. PTO–P–2013–0001]

Notice of Public Hearing and Request for Comments on Matters Related to the Harmonization of Substantive Patent Law

AGENCY: United States Patent and Trademark Office, Department of Commerce.

ACTION: Notice of Public Hearing and Request for Comments on Matters Related to the Harmonization of Substantive Patent Law.

SUMMARY: The United States Patent and Trademark Office (USPTO) is seeking stakeholder input on certain matters relating to international harmonization of substantive patent law, in particular, information and views on: (1) The grace period; (2) publication of applications; (3) the treatment of conflicting applications and (4) prior user rights. To assist in gathering this information, the USPTO is holding a public hearing at which interested members of the public are invited to testify on the issues outlined above. In addition, interested members of the public are encouraged to complete an electronic questionnaire relating to the above-identified issues. Separate written comments may be provided through electronic mail, though completion of the questionnaire is strongly preferred in lieu of separate comments. Additional details may be found in the supplementary information section of this notice.

Public Hearing: A public hearing will be held on March 21, 2013, beginning at 8:30 a.m. Eastern Daylight Time (EDT) and ending at 12:00 p.m. EDT. The public hearing will be held at the USPTO, Madison Auditorium, Concourse Level, Madison Building, 600 Dulany Street, Alexandria, Virginia 22314.

Those wishing to present oral testimony at the hearing must request an opportunity to do so in writing by email to *IP.Policy@uspto.gov* no later than February 28, 2013. Requests to testify at the hearing must indicate the following information: (1) The name of the person desiring to testify; (2) the person's contact information (telephone number and electronic mail address); (3) the organization(s) the person represents, if any; and (4) a preliminary written copy of their testimony. The opportunity to testify will only be for those physically present. Based on the requests received, an agenda of scheduled testimony will be sent to testifying respondents, and

posted on the USPTO Internet Web site (address: *http://www.uspto.gov/ip/global/aia_harmonization.jsp*). The number of participants testifying is limited to ensure that all who are speaking will have a meaningful chance to do so. Members of the public who wish solely to observe need not submit a request to attend.

Speakers selected to provide testimony at the hearing should provide a final written copy of their testimony for inclusion in the record of the proceedings no later than February 28, 2013. In addition, any member of the public may submit written comments on issues raised at the public hearing or on any issue pertaining to harmonization. However, users are strongly encouraged to fill out the questionnaire before the roundtable event in lieu of providing separate written comments. The questionnaire will also close on February 28, 2013.

The USPTO plans to make the public roundtable available via Webcast. Webcast information will be available on the USPTO's Internet Web site (address: *http://www.uspto.gov/ip/global/aia_harmonization.jsp*) before the public hearing.

Written Comments: Written comments should be sent by email to *IP.Policy@uspto.gov*. Comments may also be submitted by postal mail addressed to: Mail Stop OPEA, P.O. Box 1450, Alexandria, VA 22313–1450, ATTN: Bijou Mgbojikwe. Written comments should be identified in the subject line of the email or postal mailing as ''Harmonization Issues.'' Although comments may be submitted by postal mail, the USPTO prefers to receive comments via email. It is also strongly preferred that interested members of the public undertake the questionnaire in lieu of submitting written comments. The questionnaire will be available on the USPTO's Web site (address: *http://www.uspto.gov/ip/global/patents/tegernsee_survey/index.jsp*). However, for those wishing to submit supplemental written comments, the deadline for receipt of those written comments for consideration by the USPTO is February 28, 2013.

Because comments will be made available for public inspection, information that is not desired to be made public, such as an address or phone number, should not be included in the comments. It should be noted that the tenor of the questions posed in the questionnaire should not be perceived as an indication that the USPTO has taken a position on or is predisposed to any particular views.

Availability of Hearing Transcript and Written Comments: A transcript of the events at the hearing and the written comments will be available for public inspection at the USPTO's Office of Policy and External Affairs in the Executive Library located in the Madison West Building, Tenth Floor, 600 Dulany Street, Alexandria, Virginia 22314. Contact: Bijou Mgbojikwe at *Bijou.Mgbojikwe@uspto.gov* or 571–272–9300. In addition, the hearing transcript and the comments from the public will also be available via the USPTO Internet Web site (address: *http://www.uspto.gov*). Contact: Bijou Mgbojikwe at *Bijou.Mgbojikwe@uspto.gov* or 571–272–9300.

FOR FURTHER INFORMATION CONTACT: Bijou Mgbojikwe, Office of Policy and External Affairs, by phone 571–272–9300, by email at *Bijou.Mgbojikwe@uspto.gov* or by mail addressed to: Mail Stop OPEA, United States Patent and Trademark Office, P.O. Box 1450, Alexandria, Virginia 22313–1450, ATTN: Bijou Mgbojikwe.

SUPPLEMENTARY INFORMATION: At a meeting convened in Tegernsee, Germany, in July 2011, leaders and representatives from the patent offices of Denmark, France, Germany, Japan, the United Kingdom, and the United States as well as from the European Patent Office (the ''Tegernsee Group'') launched a new dialogue on the state of affairs concerning international harmonization of substantive patent law. Since that initial meeting, the Tegernsee Group has met twice to consider work done by patent experts from each office analyzing comparative aspects of each jurisdiction's patent law and practice. In addition, the Group mandated detailed studies on four issues of particular interest for international harmonization: the grace period, publication of applications, treatment of conflicting applications, and prior user rights.

Most recently, on October 4, 2012, Heads of Offices and experts from each of the patent offices in the Tegernsee Group met in Geneva, Switzerland, to review the results of the Group-mandated studies on these four issues. In reviewing these studies and contemplating the future of international harmonization, it was agreed that the next step in the process would be to solicit stakeholder views. To this end, experts from the Tegernsee Group offices were tasked to collaboratively develop a joint harmonization questionnaire to aid in the acquisition and analysis of stakeholder views across jurisdictions on the particular issues of: grace period, publication of applications, treatment of conflicting applications, and prior user rights. As such, each patent office in the Tegernsee Group will be separately administering the joint questionnaire to its respective stakeholders.

Accordingly, interested members of the public are encouraged to respond to the jointly-developed questionnaire being administered by the USPTO which is located at address: *http://www.uspto.gov/ip/global/patents/tegernsee_survey/index.jsp*. Further information and details concerning each of the above-identified topics may be found within the questionnaire.

Dated: *January 24, 2013.*

Teresa Stanek Rea,

Deputy Under Secretary of Commerce for Intellectual Property and Deputy Director of the United States Patent and Trademark Office.

[FR Doc. 2013–01966 Filed 1–31–13; 8:45 am]

BILLING CODE 2013–16–P

COMMITTEE FOR PURCHASE FROM PEOPLE WHO ARE BLIND OR SEVERELY DISABLED

Procurement List; Proposed Additions

AGENCY: Committee for Purchase From People Who Are Blind or Severely Disabled.

ACTION: Proposed Additions to the Procurement List.

SUMMARY: The Committee is proposing to add products to the Procurement List that will be furnished by the nonprofit agency employing persons who are blind or have other severe disabilities.

DATES: *Comments Must Be Received On or Before:* 3/4/2013.

ADDRESSES: Committee for Purchase From People Who Are Blind or Severely Disabled, Jefferson Plaza 2, Suite 10800, 1421 Jefferson Davis Highway, Arlington, Virginia 22202–3259.

FOR FURTHER INFORMATION OR TO SUBMIT COMMENTS CONTACT: Patricia Briscoe, Telephone: (703) 603–7740, Fax: (703) 603–0655, or email *CMTEFedReg@AbilityOne.gov*.

SUPPLEMENTARY INFORMATION: This notice is published pursuant to 41 U.S.C. 8503(a)(2) and 41 CFR 51–2.3. Its purpose is to provide interested persons an opportunity to submit comments on the proposed actions.

Additions

If the Committee approves the proposed additions, the entities of the Federal Government identified in this notice will be required to procure the

products listed below from the nonprofit agency employing persons who are blind or have other severe disabilities.

The following products are proposed for addition to the Procurement List for production by the nonprofit agency listed:

Products

NSN: MR 1153—Basket, Cooking, Steel, Multipurpose.
NSN: MR 1159—Set, Bakeware, Cake Pop.
NPA: Industries for the Blind, Inc., West Allis, WI.
Contracting Activity: Military Resale-Defense Commissary Agency (DeCA), Fort Lee, VA.
Coverage: C-List for the requirements of military commissaries and exchanges as aggregated by the Defense Commissary Agency.

Patricia Briscoe,

Deputy Director, Business Operations, (Pricing and Information Management).

[FR Doc. 2013–02180 Filed 1–31–13; 8:45 am]

BILLING CODE 6353–01–P

COMMITTEE FOR PURCHASE FROM PEOPLE WHO ARE BLIND OR SEVERELY DISABLED

Procurement List; Additions

AGENCY: Committee for Purchase From People Who Are Blind or Severely Disabled.

ACTION: Additions to the Procurement List.

SUMMARY: This action adds products and services to the Procurement List that will be furnished by nonprofit agencies employing persons who are blind or have other severe disabilities.

DATES: *Effective Date:* 3/4/2013.

ADDRESSES: Committee for Purchase From People Who Are Blind or Severely Disabled, Jefferson Plaza 2, Suite 10800, 1421 Jefferson Davis Highway, Arlington, Virginia 22202–3259.

FOR FURTHER INFORMATION CONTACT: Patricia Briscoe, Telephone: (703) 603–7740, Fax: (703) 603–0655, or email *CMTEFedReg@AbilityOne.gov.*

SUPPLEMENTARY INFORMATION:

Additions

On 11/20/2012 (77 FR 69598) and 12/7/2012 (77 FR 73025–73026), the Committee for Purchase From People Who Are Blind or Severely Disabled published notices of proposed additions to the Procurement List.

After consideration of the material presented to it concerning capability of qualified nonprofit agencies to provide the products and services and impact of the additions on the current or most recent contractors, the Committee has determined that the products and services listed below are suitable for procurement by the Federal Government under 41 U.S.C. 8501–8506 and 41 CFR 51–2.4.

Regulatory Flexibility Act Certification

I certify that the following action will not have a significant impact on a substantial number of small entities. The major factors considered for this certification were:

1. The action will not result in any additional reporting, recordkeeping or other compliance requirements for small entities other than the small organizations that will furnish the products and services to the Government.

2. The action will result in authorizing small entities to furnish the products and services to the Government.

3. There are no known regulatory alternatives which would accomplish the objectives of the Javits-Wagner-O'Day Act (41 U.S.C. 8501–8506) in connection with the products and services proposed for addition to the Procurement List.

End of Certification

Accordingly, the following products and services are added to the Procurement List:

Products

NSN: 7510–00–NIB–0889—Protector, Document, 7-hole, Medium Weight, Clear, 8–½″×11″.
NSN: 7510–00–NIB–1882—Folders, Project, 8–½″×11″, Clear.
NPA: L.C. Industries or the Blind, Inc., Durham, NC.
Contracting Activity: General Services Administration, New York, NY
COVERAGE: A-List for the Total Government Requirement as aggregated by the General Services Administration.

NSN: 7220–00–NIB–0440—Floor Mat, Anti-Fatigue, Ribbed Vinyl, 2′ × 3′, Black.
NSN: 7220–00–NIB–0441—Floor Mat, Anti-Fatigue, Ribbed Vinyl, 3′ × 5′, Black.
NPA: Wiscraft, Inc., Milwaukee, WI.
Contracting Activity: General Services Administration, Fort Worth, TX.
COVERAGE: A-List for the Total Government Requirement as aggregated by the General Services Administration.

Group 1 and 2 Spices

NSN: 8950–01–E60–8236—Black cracked pepper in a 16 ounce metal can.
NSN: 8950–01–E60–8237—Black cracked pepper in a 16 ounce plastic container.
NSN: 8950–01–E60–8234—Black cracked pepper in a 18 ounce metal can.
NSN: 8950–01–E60–8235—Black cracked pepper in a 18 ounce plastic container.
NSN: 8950–01–E60–7765—Black ground pepper in a 1.5 ounce plastic container.
NSN: 8950–01–E60–7766—Gourmet black ground pepper in a 16 ounce metal container.
NSN: 8950–01–E60–7767—Gourmet black ground pepper in a 16 ounce plastic container.
NSN: 8950–01–E60–7769—Gourmet black ground pepper in a 18 ounce metal container.
NSN: 8950–01–E60–7768—Gourmet black ground pepper in a 18 ounce plastic container.
NSN: 8950–01–E60–7770—Black ground pepper in a 5 pound plastic container.
NSN: 8950–01–E60–8238—Black whole pepper in a 16 ounce metal can.
NSN: 8950–01–E60–8239—Black whole pepper in a 16 ounce plastic container.
NSN: 8950–01–E60–8241—Black whole pepper in a 18 ounce metal can.
NSN: 8950–01–E60–5749—Paprika seasoning in a 16 ounce container.
NSN: 8950–01–E60–5754—Garlic, granulated in a 12 ounce plastic container.
NSN: 8950–01–E60–5753—Garlic, granulated in a 25 ounce plastic container.
NSN: 8950–01–E60–5751—Garlic powder in a 16 ounce plastic container.
NSN: 8950–01–E60–5752—Garlic, powder in a 6 pound plastic container.
NSN: 8950–01–E61–0103—Canadian style steak seasoning, 29 ounce plastic container.
NSN: 8950–01–E61–0104—Ginger ground in a 14 ounce plastic container.
NSN: 8950–01–E61–0105—Ginger ground in a 15 ounce plastic container.
NSN: 8950–01–E60–9152—Ground ginger in a 16 ounce plastic container.
NSN: 8950–01–E60–9155—Cayenne pepper in a 14 ounce plastic container.
NSN: 8950–01–E61–0106—Cayenne pepper in a 1.5 ounce plastic container.
NSN: 8950–01–E61–0107—Cayenne pepper in a 16 ounce plastic container.
NSN: 8950–01–E61–0108—Ground red pepper in a 16 ounce plastic container.
NSN: 8950–01–E61–0099—Taco seasoning in a 9 ounce plastic container.
NSN: 8950–01–E61–0100—Taco seasoning in a 11 ounce plastic container.
NSN: 8950–01–E61–0101—Taco seasoning in a 23 ounce plastic container.
NSN: 8950–01–E61–0102—Taco seasoning in a 24 ounce plastic container.
NSN: 8950–01–E60–9456—All purpose seasoning without salt in a 2.5 ounce plastic container.
NSN: 8950–01–E60–9457—All purpose seasoning without salt in a 6.75 ounce plastic container.
NSN: 8950–01–E60–9458—All purpose seasoning without salt in a 10 ounce plastic container.
NSN: 8950–01–E60–9459—All purpose seasoning without salt in a 20 ounce plastic container.
NSN: 8950–01–E60–9460—All purpose seasoning without salt in a 28 ounce plastic container.
NSN: 8950–01–E60–9461—Dark chili powder in a 16 ounce plastic container.
NSN: 8950–01–E60–9464—Dark chili powder in a 20 ounce plastic container.
NSN: 8950–01–E60–9465—Light chili

powder in a 5 pound plastic container.
NSN: 8950–01–E60–9462—Light chili powder in a 17 ounce plastic container.
NSN: 8950–01–E60–9463—Light chili powder in a 18 ounce plastic container.
NSN: 8950–01–E60–9468—Cinnamon maple seasoning in a 30 ounce plastic container.
NSN: 8950–01–E60–9472—Cinnamon Sticks 2¾″ in length in a 8 ounce plastic container.
NSN: 8950–01–E60–9469—Ground Cinnamon in a 15 ounce plastic container.
NSN: 8950–01–E60–9150—Ground Cinnamon in a 16 ounce plastic container.
NSN: 8950–01–E60–9470—Ground Cinnamon in a 18 ounce plastic container.
NSN: 8950–01–E60–9471—Ground Cinnamon in a 5 pound plastic container.
NSN: 8950–01–E60–9466—Lemon pepper seasoning in a 26 ounce plastic container.
NSN: 8950–01–E60–9467—Lemon pepper seasoning in a 27 ounce plastic container.
NSN: 8950–01–E60–9147—Lemon pepper seasoning in a 28 ounce plastic container.
NPA: CDS Monarch, Webster, NY.
Contracting Activity: Department of Veterans Affairs National Acquisition Center, Hines, IL.
Coverage: C-List for 100% of the requirement of the Department of Veteran's Affairs as aggregated by the Department of Veterans Affairs National Acquisition Center, Hines, IL.

Services

Service Type/Location: Grounds Maintenance, National Plant Germplasm Quarantine Center, Building 580, Powder Mill Road, Beltsville, MD.
NPA: NW Works, Inc., Winchester, VA.
Contracting Activity: Dept of Agriculture, Animal and Plant Hlth Insp SVC, Minneapolis, MN.

Service Type/Locations: Secure Document Destruction, Internal Revenue Service, IRS Office: 5000 Corporate Drive, Holtsville, NY, IRS Office: 1 Corporate Drive, Holtsville, NY.
NPA: NISH, Vienna, VA (Prime Contractor).
NPA: NYSARC, Inc., NYC Chapter, New York, NY (Subcontractor).
Contracting Activity: Dept of Treasury, Internal Revenue Service, Washington, DC.

Service Type/Location: Custodial Service, Social Security Administration (SSA), West High Rise and West Low Rise Buildings, 6401 Security Blvd., Baltimore, MD.
NPA: Goodwill Industries of the Chesapeake, Inc., Baltimore, MD.
Contracting Activity: Social Security Administration, Hdqtrs—Office of Acquisition & Grants, Baltimore, MD.

Service Type/Location: Base Operations Support Service, Directorate of Public Works, 1830 Quartermaster Road, Fort Lee, VA.
NPA: Skookum Educational Programs, Bremerton, WA.
Contracting Activity: Dept of the Army, W6QM MICC Ft Lee, Fort Lee, VA.

Patricia Briscoe,

Deputy Director, Business Operations, (Pricing and Information Management).

[FR Doc. 2013–02179 Filed 1–31–13; 8:45 am]

BILLING CODE 6353–01–P

COMMITTEE FOR THE IMPLEMENTATION OF TEXTILE AGREEMENTS

Determination Under the Textile and Apparel Commercial Availability Provision of the Dominican Republic-Central America-United States Free Trade Agreement (''CAFTA–DR Agreement'')

AGENCY: The Committee for the Implementation of Textile Agreements.

ACTION: Determination to add a product in unrestricted quantities to Annex 3.25 of the CAFTA–DR Agreement.

DATES: *Effective Date:* February 1, 2013.

SUMMARY: The Committee for the Implementation of Textile Agreements (''CITA'') has determined that certain cotton/polyester three-thread circular knit fleece fabric, as specified below, is not available in commercial quantities in a timely manner in the CAFTA–DR countries. The product will be added to the list in Annex 3.25 of the CAFTA–DR Agreement in unrestricted quantities.

FOR FURTHER INFORMATION CONTACT: Maria Dybczak, Office of Textiles and Apparel, U.S. Department of Commerce, (202) 482–3651.

For Further Information On-Line: http://web.ita.doc.gov/tacgi/CaftaReqTrack.nsf under ''Approved Requests,'' Reference number: 172.2013.01.02.Fabric.Alston&BirdforIntradeco.

SUPPLEMENTARY INFORMATION:

Authority: The CAFTA–DR Agreement; Section 203(o)(4) of the Dominican Republic-Central America-United States Free Trade Agreement Implementation Act (''CAFTA–DR Implementation Act''), Pub. L. 109–53; the Statement of Administrative Action, accompanying the CAFTA–DR Implementation Act; and Presidential Proclamations 7987 (February 28, 2006) and 7996 (March 31, 2006).

Background

The CAFTA–DR Agreement provides a list in Annex 3.25 for fabrics, yarns, and fibers that the Parties to the CAFTA–DR Agreement have determined are not available in commercial quantities in a timely manner in the territory of any Party. The CAFTA–DR Agreement provides that this list may be modified pursuant to Article 3.25(4)–(5), when the President of the United States determines that a fabric, yarn, or fiber is not available in commercial quantities in a timely manner in the territory of any Party. *See* Annex 3.25 of the CAFTA–DR Agreement; *see also* section 203(o)(4)(C) of the CAFTA–DR Implementation Act.

The CAFTA–DR Implementation Act requires the President to establish procedures governing the submission of a request and providing opportunity for interested entities to submit comments and supporting evidence before a commercial availability determination is made. In Presidential Proclamations 7987 and 7996, the President delegated to CITA the authority under section 203(o)(4) of CAFTA–DR Implementation Act for modifying the Annex 3.25 list. Pursuant to this authority, on September 15, 2008, CITA published modified procedures it would follow in considering requests to modify the Annex 3.25 list of products determined to be not commercially available in the territory of any Party to CAFTA–DR (*Modifications to Procedures for Considering Requests Under the Commercial Availability Provision of the Dominican Republic-Central America-United States Free Trade Agreement,* 73 FR 53200) (''CITA's procedures'').

On January 2, 2013, the Chairman of CITA received a request for a Commercial Availability determination (''Request'') from Alston & Bird on behalf of Intradeco Apparel, Inc. for certain cotton/polyester three-thread circular knit fleece fabric, as specified below. On January 3, 2013, in accordance with CITA's procedures, CITA notified interested parties of the Request, which was posted on the dedicated Web site for CAFTA–DR Commercial Availability proceedings. In its notification, CITA advised that any Response with an Offer to Supply (''Response'') must be submitted by January 16, 2013, and any Rebuttal Comments to a Response must be submitted by January 23, 2013, in accordance with sections 6 and 7 of CITA's procedures. No interested entity submitted a Response to the Request advising CITA of its objection to the Request and its ability to supply the subject product.

In accordance with section 203(o)(4)(C) of the CAFTA–DR Implementation Act, and section 8(c)(2) of CITA's procedures, as no interested entity submitted a Response objecting to the Request and providing an offer to supply the subject product, CITA has determined to add the specified fabric to

the list in Annex 3.25 of the CAFTA–DR Agreement.

The subject product has been added to the list in Annex 3.25 of the CAFTA–DR Agreement in unrestricted quantities. A revised list has been posted on the dedicated Web site for CAFTA–DR Commercial Availability proceedings.

Specifications: Certain Cotton/Polyester Three-Thread Circular Knit Fleece Fabric

HTS: 6001.21

Fiber content: Cotton and polyester of no less than 75% cotton
Yarn description:
Face yarn—100% ring spun combed cotton yarn
Tie yarn—100% multifilament polyester yarn
Fleece yarn—cotton and staple polyester yarn of no less than 65% cotton
Machine gauge: 21
Weight: 232–271 grams/meter squared (6.85–8.0 ounces per square yard)
Finish: napped on one side.

Kim Glas,

Chairman, Committee for the Implementation of Textile Agreements.

[FR Doc. 2013–02220 Filed 1–31–13; 8:45 am]

BILLING CODE 3510–DS–P

CORPORATION FOR NATIONAL AND COMMUNITY SERVICE

Sunshine Act Notice

The Board of Directors of the Corporation for National and Community Service gives notice of the following meeting:

DATE AND TIME: Wednesday, February 6, 2013, 9:30–11:00 a.m.

PLACE: Time Warner Inc., One Time Warner Center, 10th Floor Conference Center, New York, NY 10019–8016. (Entrance on 58th Street between 8th and 9th Avenues.)

CALL-IN INFORMATION: This meeting is available to the public through the following toll-free call-in number: 888–323–2711 conference call access code number 8542. Any interested member of the public may call this number and listen to the meeting. Callers can expect to incur charges for calls they initiate over wireless lines, and CNCS will not refund any incurred charges. Callers will incur no charge for calls they initiate over land-line connections to the toll-free telephone number. Replays are generally available one hour after a call ends. The toll-free phone number for the replay is 888–568–0896, replay passcode 5990. The end replay date is February 13, 2013, 10:59 p.m. (CT).

STATUS: Open.

MATTERS TO BE CONSIDERED:

I. Chair's Opening Comments
  a. Call to Order, Welcome, and Preview of Today's Meeting Agenda
  b. Introduction and Acknowledgements
  c. Summary of Retreat
II. Committee Reports
III. Consideration of Previous Meeting's Minutes
IV. CEO Report
V. Acknowledgement of Past Members and Alumni Involvement
VI. Discussions, Deliberations and Official Actions
VII. Public Comments
VIII. Final Comments and Adjournment

Members of the public who would like to comment on the business of the Board may do so in writing or in person. Individuals may submit written comments to *jmauk@cns.gov* subject line: FEBRUARY 2013 CNCS BOARD MEETING by 4:00 p.m. ET on Friday February 1st. Individuals attending the meeting in person who would like to comment will be asked to sign-in upon arrival. Comments are requested to be limited to 2 minutes.

REASONABLE ACCOMMODATIONS: The Corporation for National and Community Service provides reasonable accommodations to individuals with disabilities where appropriate. Anyone who needs an interpreter or other accommodation should notify Ida Green at *igreen@cns.gov* or 202–606–6861 by 5 p.m. on February 1, 2013.

CONTACT PERSON FOR MORE INFORMATION: Jenny Mauk, Special Assistant to the CEO, Corporation for National and Community Service, 1201 New York Avenue NW., Washington, DC 20525. Phone: (202) 606–6615. Fax: (202) 606–3460. TTY: (800) 833–3722. Email: *jmauk@cns.gov.*

Dated: January 29, 2013.

Valerie Green,

General Counsel.

[FR Doc. 2013–02292 Filed 1–30–13; 11:15 am]

BILLING CODE 6050–$$–P

DEPARTMENT OF DEFENSE

Office of the Secretary

Department of Defense Task Force on the Care, Management, and Transition of Recovering Wounded, Ill, and Injured Members of the Armed Forces; Notice of Federal Advisory Committee Meeting

AGENCY: Office of the Assistant Secretary of Defense, Department of Defense.

ACTION: Meeting notice.

SUMMARY: Under the provisions of the Federal Advisory Committee Act of 1972 (5 U.S.C., Appendix, as amended), the Government in the Sunshine Act of 1976 (5 U.S.C. 552b, as amended), and 41 CFR 102–3.150, the Department of Defense announces that the following Federal Advisory Committee meeting of the Department of Defense Task Force on the Care, Management, and Transition of Recovering Wounded, Ill, and Injured Members of the Armed Forces (subsequently referred to as the Task Force) will take place.

DATES: Tuesday, February 26, 2013, from 8:00 a.m. to 5:15 p.m. EDT and Wednesday, February 27, 2013, from 8:00 a.m. to 5:00 p.m. EDT.

ADDRESSES: DoubleTree by Hilton Hotel Washington DC-Crystal City, 300 Army Navy Drive, Arlington, VA 22202.

FOR FURTHER INFORMATION CONTACT: Mail Delivery service through Recovering Warrior Task Force, Hoffman Building II, 200 Stovall St., Alexandria, VA 22332–0021 ''Mark as Time Sensitive for February Meeting''. Emails to *rwtf@wso.whs.mil.* Denise F. Dailey, Designated Federal Officer; Telephone (703) 325–6640. Fax (703) 325–6710.

SUPPLEMENTARY INFORMATION:

Purpose of the Meeting: The purpose of the meeting is for the Task Force Members to convene and gather data from panels and briefers on the Task Force's topics of inquiry.

Agenda: (Refer to *http://dtf.defense.gov/rwtf/meetings.html* for the most up-to-date meeting information).

Day One: Tuesday, February 26, 2013

8:00 a.m.–9:00 a.m. Welcome and Site Visit Review
9:00 a.m.–10:00 a.m. Army Response to RWTF FY12 Recommendations
10:00 a.m.–10:15 a.m. Break
10:15 a.m.–12:00 p.m. Army Warrior Transition Command Survey Program
12:00 p.m.–1:00 p.m. Additional Questions for Army Warrior Transition Command
1:00 p.m.–2:00 p.m. Break for Lunch
2:00 p.m.–3:00 p.m. Air Force Response to RWTF FY12 Recommendations
3:00 p.m.–3:45 p.m. Air Force Warrior and Survivor Care Survey Program
3:45 p.m.–4:00 p.m. Break
4:00 p.m.–5:00 p.m. Air Force Warrior and Survivor Care Survey Program (continued)
5:00 p.m.–5:15 p.m. Wrap Up

Day Two: Wednesday, February 27, 2013

8:00 a.m.–9:00 a.m. Welcome and Admin

9:00 a.m.–9:15 a.m. Public Forum
9:15 a.m.–10:15 a.m. Navy Safe Harbor Response to RWTF FY12 Recommendations
10:15 a.m.–10:30 a.m. Break
10:30 a.m.–12:15 p.m. Navy Harbor Survey Program
12:15 p.m.–1:15 p.m. Break for Lunch
1:15 p.m.–2:15 p.m. Marine Corps Response to RWTF FY12 Recommendations
2:15 p.m.–3:00 p.m. Marine Corps Wounded Warrior Regiment Survey Program
3:00 p.m.–3:15 p.m. Break
3:15 p.m.–4:15 p.m. Marine Corps Wounded Warrior Regiment Survey Program (continued)
4:45 p.m.–5:00 p.m. Wrap Up

Public's Accessibility to the Meeting: Pursuant to 5 U.S.C. 552b and 41 CFR 102–3.140 through 102–3.165, and the availability of space, this meeting is open to the public. Seating is on a first-come basis.

Pursuant to 41 CFR 102–3.105(j) and 102–3.140, and section 10(a)(3) of the Federal Advisory Committee Act of 1972, the public or interested organizations may submit written statements to the Department of Defense Task Force on the Care, Management, and Transition of Recovering Wounded, Ill, and Injured Members of the Armed Forces about its mission and functions. If individuals are interested in making an oral statement during the Public Forum time period, a written statement for a presentation of two minutes must be submitted and must identify it is being submitted for an oral presentation by the person making the submission. Identification information must be provided and at a minimum must include a name and a phone number. Individuals may visit the Task Force Web site at *http://dtf.defense.gov/rwtf/to* view the Charter. Individuals making presentations will be notified by Wednesday, February 20, 2013. Oral presentations will be permitted only on Wednesday, February 27, 2013 from 9:00 a.m. to 9:15 a.m. EDT before the Task Force. The number of oral presentations will not exceed ten, with one minute of questions available to the Task Force members per presenter. Presenters should not exceed their two minutes.

Written statements in which the author does not wish to present orally may be submitted at any time or in response to the stated agenda of a planned meeting of the Department of Defense Task Force on the Care, Management, and Transition of Recovering Wounded, Ill, and Injured Members of the Armed Forces.

All written statements shall be submitted to the Designated Federal Officer for the Task Force through the contact information in **FOR FURTHER INFORMATION CONTACT**, and this individual will ensure that the written statements are provided to the membership for their consideration.

Statements, either oral or written, being submitted in response to the agenda mentioned in this notice must be received by the Designated Federal Officer at the address listed in **FOR FURTHER INFORMATION CONTACT** no later than 5:00 p.m. EDT, Monday, February 18, 2013 which is the subject of this notice. Statements received after this date may not be provided to or considered by the Task Force until its next meeting. Please mark mail correspondence as ''Time Sensitive for February Meeting.''

The Designated Federal Officer will review all timely submissions with the Task Force Co-Chairs and ensure they are provided to all members of the Task Force before the meeting that is the subject of this notice.

Reasonable accommodations will be made for those individuals with disabilities who request them. Requests for additional services should be directed to Ms. Heather Moore, (703) 325–6640, by 5:00 p.m. EDT, Monday, February 18, 2013.

Dated: January 29, 2013.

Aaron Siegel,

Alternate OSD Federal Register Liaison Officer, Department of Defense.

[FR Doc. 2013–02172 Filed 1–31–13; 8:45 am]

BILLING CODE 5001–06–P

DEPARTMENT OF DEFENSE

Department of the Navy

Notice of Intent To Prepare an Environmental Impact Statement for Land-Water Interface and Service Pier Extension, Naval Base Kitsap Bangor, Silverdale, WA and To Announce Public Scoping Meetings

AGENCY: Department of the Navy, DoD.

ACTION: Notice.

SUMMARY: Pursuant to section (102)(2)(c) of the National Environmental Policy Act (NEPA) of 1969 and the regulations implemented by the Council on Environmental Quality (CEQ) (40 CFR parts 1500–1508), the Department of the Navy (DoN) announces its intent to prepare an Environmental Impact Statement (EIS) to evaluate the potential environmental impacts associated with two actions: (1) The proposed construction and operation of Land-Water Interface (LWI) structures and (2) the proposed construction and operation of a Service Pier Extension (SPE) on Naval Base (NAVBASE) Kitsap Bangor.

The DoN proposes two projects on NAVBASE Kitsap Bangor waterfront to: (1) Comply with Department of Defense (DoD) directives to protect Navy OHIO Class ballistic missile submarines (TRIDENT submarines) from increased and evolving threats and to prevent the seizure, damage, or destruction of military assets and (2) eliminate deployment constraints and improve maintenance of SEAWOLF Class submarines.

The first proposed action includes constructing two LWI structures and modifying the existing floating Port Security Barrier (PSB) system for improved protection of TRIDENT submarines. Construction of the LWI structures would enclose the Navy Waterfront Restricted Area (WRA) on NAVBASE Kitsap Bangor by constructing security barriers in the intertidal zone at the Bangor waterfront. Construction is anticipated to take two years. Construction activities occurring in the water during the first year may involve pile driving and would be conducted July 2015 through February 2016. Once the pile driving is complete, activities other than pile driving may occur in the water up until February 2017.

The second proposed action would relocate SEAWOLF Class submarines SSN–21 (SEAWOLF) and SSN–22 (CONNECTICUT) from NAVBASE Kitsap Bremerton to join SSN–23 (JIMMY CARTER) at NAVBASE Kitsap Bangor. The existing Service Pier would be extended and land based associated support facilities would be constructed including a Maintenance Support Facility, and utility upgrades including an emergency power generator, and a parking lot. Shore based facilities constructed on the pier would include a Pier Services and Compressor Building and a pier crane. Construction would occur from April 2015 to March 2017. Construction in the water is planned for July through February of each year, beginning in July 2015 and concluding in February 2017. The relocation would result in the consolidation of berthing and support for the SEAWOLF Class submarines at NAVBASE Kitsap Bangor.

NAVBASE Kitsap is the action proponent. The LWI construction and PSB modifications are for the DoN's Strategic Systems Programs (SSP), which directs research, development, manufacturing, test, evaluation, and operational support of the TRIDENT

program. The SPE and supporting facilities are for Commander, Submarine Development Squadron Five (CSDS–5). CSDS–5 is the Immediate Superior in Command for all three SEAWOLF Class submarines and four DoN research, development, test, and evaluation (RDT&E) detachments based at NAVBASE Kitsap Bangor.

The DoN is the lead federal agency for this action. The DoN is requesting the U.S. Army Corps of Engineers and the National Marine Fisheries Service to be Cooperating Agencies. The DoN will hold public scoping meetings to receive oral and/or written comments on environmental concerns related to the proposed actions, to determine the scope of issues to address in the Draft EIS, and to identify and refine alternatives to the proposed actions. Federal, state, and local agencies, American Indian tribes, and the public are invited to participate in the scoping process.

The public scoping meetings will be conducted in English and will be arranged in an informal, open-house format. Attendees will be provided the opportunity to sign in and then visit various stations hosted by DoN representatives and technical staff assigned to provide information and answer questions. Several large display boards will be located throughout the meeting locations to assist attendees in understanding the proposed actions and the alternatives. Fact sheets about the proposed actions and alternatives will be available to attendees. A comment table with comment sheets will be placed in an easily accessible location.

DATES AND ADDRESSES: The public scoping meetings will be held on the following dates and locations:

1. February 20, 2013 from 5:00 p.m. to 8:00 p.m. at the Chimacum High School Commons, 91 West Valley Road, Chimacum, WA 98325; and

2. February 21, 2013 from 5:00 p.m. to 8:00 p.m. at the North Kitsap High School Commons, 1780 Northeast Hostmark Street, Poulsbo, WA 98370.

FOR FURTHER INFORMATION CONTACT: Naval Facilities Engineering Command Northwest, Attn: Thomas Dildine, LWI/SPE EIS Project Manager, 1101 Tautog Circle, Silverdale, WA 98315–1101, Email: *nwnepa@navy.mil*, Phone: 360–396–6387, or Web site: *https://www.nbkeis.com/lwi/*.

SUPPLEMENTARY INFORMATION: The purpose of the LWI project is to (1) comply with DoD directives to protect TRIDENT submarines from increased and evolving threats and to prevent the seizure, damage, or destruction of military assets. The purpose of the SPE project is to eliminate deployment constraints and improve maintenance of SEAWOLF Class submarines.

The need for the LWI is to:

- Enhance security within the WRA. Protection of strategic military assets is a vital national security concern. Aggressive security improvements within the DoN pre-date the USS Cole incident and the terrorist attacks of September 11, 2001 and continue today.

The need for the SPE is to:

- Remove restrictions on navigating SEAWOLF Class submarines through Rich Passage under certain tidal conditions;
- Improve long-term operational effectiveness for the three SEAWOLF Class submarines at NAVBASE Kitsap Bangor;
- Provide berthing and logistical support at the DoN's submarine RDT&E hub, which is located on NAVBASE Kitsap Bangor; and
- Improve submarine crew training and readiness through co-location of the SEAWOLF Class submarines and crew with command functions at NAVBASE Kitsap Bangor submarine training center.

The LWI and SPE are related actions due to their proximity, anticipated timing of construction, and potential to affect similar resources, but are not connected projects because each proposed action would function independently. While independent in function, the projects may have the potential to affect related resources, so the DoN has chosen to analyze both projects in a single EIS.

The EIS must evaluate reasonable alternatives in accordance with the CEQ regulations (40 Code of Federal Regulations [CFR] § 1502.14) and DoN regulations (32 CFR Part 775) that implement the NEPA. Alternatives for the proposed action were identified based on security and program requirements, avoiding or minimizing environmental impacts, and compatibility with existing facilities, infrastructure, and operational missions.

The DoN is considering the following alternatives to satisfy each purpose and need:

(i) LWI Alternative 1 (No Action)—Under the No Action Alternative, the DoN would not build the LWI and associated PSB modifications. DoD and DoN security requirements for the TRIDENT program would not be met.

(ii) LWI Alternative 2 (Pile-Supported Pier and PSB Modification)—Under this alternative, the LWI structure would include two pile-supported piers built from shoreline abutments to connect with the existing PSB system at the north and south sides of the NAVBASE Kitsap Bangor WRA. Each pier would connect to a solid concrete abutment to be constructed on the shore, and an anchoring structure for the PSBs to be installed at the seaward end of each pier. The LWI pier structure would be 280 feet long at the northern location and 730 feet long at the southern location. The piers would be supported by up to fifty-four 24-inch diameter steel piles at the northern location and up to eighty-two 24-inch diameter steel piles at the southern location. A fence would be installed along the length of the piers, five 30 foot tall towers would be installed on the piers to support lights and cameras, and a mesh/grate with sensors would extend from the bottom of the pier walkway to the seafloor.

(iii) LWI Alternative 3 (Port Security Barrier Modification)—This alternative, the DoN would build the LWI using PSBs instead of a pile supported pier. The LWI structures would consist of modifying and lengthening the existing PSBs at the same north and south locations as the pile supported pier alternative. The PSB sections would be 280 feet long at the northern location and 730 feet long at the southern location. The existing PSB system would be modified and lengthened to extend across the intertidal zone and would attach to shoreline abutments. Two solid concrete abutments would be constructed at the shore end of the north and south location to form a secure barrier from the bluff to the intertidal zone. Three 30 foot tall in-water towers would be installed to support lights and security equipment. The in-water towers would each be supported by a platform resting on four 24 inch piles. Two additional 30 foot tall towers would be installed on land.

(iv) SPE Alternative 1 (No Action)—The DoN would not consolidate SEAWOLF berthing and support services. The SEAWOLF Class submarines would continue to have reduced operational availability (due to tide windows limiting safe navigation through Rich Passage) and the long-term operations and maintenance efficiency and effectiveness resulting from consolidation of SEAWOLF Class submarines in one location would not occur.

(v) SPE Alternative 2 (Short Pier Configuration) The DoN would consolidate SEAWOLF Class submarines on NAVBASE Kitsap Bangor and build and operate the SPE proposed action using a side by side submarine mooring configuration. The proposed new facilities associated with this option include a 600-lineal-foot SPE, a 3,100-square-foot Pier Services and Compressor Building, a pier crane, a

50,000-square-foot shoreside Maintenance Support Facility, and a shoreside emergency diesel generator facility. The new Maintenance Support Facility would be built within an existing parking lot. To support additional personnel, a 6-acre upland parking lot and lay down area would be constructed near the proposed Maintenance Support Facility. The SPE would be supported by approximately 320 steel piles.

(vi) SPE Alternative 3 (Long Pier Configuration)—The DoN would consolidate SEAWOLF Class submarines on NAVBASE Kitsap Bangor and build and operate the SPE proposed action using an in-line berth submarine mooring configuration. The proposed new facilities associated with this option include a 1,200-lineal-foot SPE, a 3,100-square-foot Pier Services and Compressor Building, a pier crane, a 50,000-square-foot shoreside Maintenance Support Facility, and a shoreside emergency diesel generator facility. The new Maintenance Support Facility would be built within an existing parking lot. To support additional personnel, a 6-acre upland parking lot and lay down area would be constructed near the proposed Maintenance Support Facility. The SPE would be supported by approximately 700 steel piles.

The proposed actions will be designed to minimize environmental impacts to the extent practicable. Project details including construction methods, schedule, operations, and maintenance, will be developed during the design process and analyzed in the Draft EIS.

No decision will be made to implement any alternative until the EIS process is completed and a Record of Decision is signed by the acting Principal Deputy Assistant Secretary of the Navy (Energy, Installations, and Environment).

The impacts to be evaluated include, but will not be limited to, effects on federally listed threatened and endangered species and critical habitat, impacts relating to underwater noise and airborne noise from pile driving and other actions, loss of eelgrass and other marine habitat, decreased opportunities for migratory and transient movement of fish and wildlife within the waterfront, reduction in water quality, effects on littoral drift (shoreline sediment movement), and effects on tribal resources.

The analysis will include an evaluation of direct, indirect, short-term, and long-term impacts of construction and operation of each project as well as cumulative impacts from other DoN and non-DoN activities in the project area.

The DoN is initiating the scoping process to identify community concerns and local issues to be addressed in the EIS. Federal, state, and local agencies, American Indian tribes, and interested persons are encouraged to provide written comments at scheduled public scoping meetings. All written statements will become part of the public record and will be responded to in the Draft EIS.

Written comments should be mailed to Naval Facilities Engineering Command Northwest, 1101 Tautog Circle, Silverdale, WA 98315–1101, Attention: Thomas Dildine, LWI/SPE EIS Project Manager. Comments may also be submitted online at *https://www.nbkeis.com/lwi/* during the comment period. All comments must be received by March 17, 2013 to ensure they become part of the official record.

Dated: January 28, 2013.

C.K. Chiappetta,

Lieutenant Commander, Office of the Judge Advocate General U.S. Navy, Federal Register Liaison Officer.

[FR Doc. 2013–02176 Filed 1–31–13; 8:45 am]

BILLING CODE 3810–FF–P

DEPARTMENT OF EDUCATION

[Docket No.: ED–2013–ICCD–0008]

Agency Information Collection Activities; Submission to the Office of Management and Budget for Review and Approval; Comment Request; High School Longitudinal Study of 2009 (HSLS:09) High School Transcript and 2013 Update Full Scale Study and Panel Maintenance

AGENCY: Department of Education (ED), Institute of Education Sciences.

ACTION: Notice.

SUMMARY: In accordance with the Paperwork Reduction of 1995 (44 U.S.C. chapter 3501 *et seq.*), ED is proposing a revision of an existing information collection.

DATES: Interested persons are invited to submit comments on or before March 4, 2013.

ADDRESSES: Comments submitted in response to this notice should be submitted electronically through the Federal eRulemaking Portal at *http://www.regulations.gov* by selecting Docket ID number ED–2013–ICCD–0008 or via postal mail, commercial delivery, or hand delivery. Please note that comments submitted by fax or email and those submitted after the comment period will not be accepted. Written requests for information or comments submitted by postal mail or delivery should be addressed to the Director of the Information Collection Clearance Division, U.S. Department of Education, 400 Maryland Avenue SW., LBJ, Room 2E105, Washington, DC 20202–4537.

FOR FURTHER INFORMATION CONTACT: Electronically mail *ICDocketMgr@ed.gov.* Please do not send comments here.

SUPPLEMENTARY INFORMATION: The Department of Education (ED), in accordance with the Paperwork Reduction Act of 1995 (PRA) (44 U.S.C. 3506(c)(2)(A)), provides the general public and Federal agencies with an opportunity to comment on proposed, revised, and continuing collections of information. This helps the Department assess the impact of its information collection requirements and minimize the public's reporting burden. It also helps the public understand the Department's information collection requirements and provide the requested data in the desired format. ED is soliciting comments on the proposed information collection request (ICR) that is described below. The Department of Education is especially interested in public comment addressing the following issues: (1) Is this collection necessary to the proper functions of the Department; (2) will this information be processed and used in a timely manner; (3) is the estimate of burden accurate; (4) how might the Department enhance the quality, utility, and clarity of the information to be collected; and (5) how might the Department minimize the burden of this collection on the respondents, including through the use of information technology. Please note that written comments received in response to this notice will be considered public records.

Title of Collection: High School Longitudinal Study of 2009 (HSLS:09) High School Transcript and 2013 Update Full Scale Study and Panel Maintenance.

OMB Control Number: 1850–0852.

Type of Review: Revision of an existing information collection.

Respondents/Affected Public: State, Local or Tribal Governments; Individuals or households.

Total Estimated Number of Annual Responses: 34,184.

Total Estimated Number of Annual Burden Hours: 9,975.

Abstract: The High School Longitudinal Study of 2009 (HSLS:09) is a nationally representative, longitudinal study of more than 20,000 9th graders in 944 schools who will be followed

through their secondary and postsecondary years. The main study students were re-surveyed in 2012 when most were high school 11th graders. The study focuses on understanding students' trajectories from the beginning of high school into postsecondary education or the workforce and beyond. What students decide to pursue when, why, and how are crucial questions for HSLS:09, especially, but not solely, in regards to science, technology, engineering, and math (STEM) courses, majors, and careers. This study includes a new student assessment in algebraic skills, reasoning, and problem solving and, like past studies, will survey students, their parents, school administrators, school counselors, and teachers. Students will be administered a questionnaire and an assessment instrument. This submission will ask for the clearance for the update of HSLS:2009 high school students who were in 9th grade in the base year (June 2013-October 2013), collection of their high school transcripts (September 2013–January 2014), and 2nd follow-up sample panel maintenance (between CU & 2FU FT; Fall 2013).

Dated: January 25, 2013.

Stephanie Valentine,

Acting Director, Information Collection Clearance Division, Privacy, Information and Records Management Services, Office of Management.

[FR Doc. 2013–02230 Filed 1–31–13; 8:45 am]

BILLING CODE 4000–01–P

DEPARTMENT OF EDUCATION

Applications for New Awards; National Institute on Disability and Rehabilitation Research—Disability and Rehabilitation Research Projects and Centers Program—Minority-Serving Institution Advanced Rehabilitation Research Training Projects

AGENCY: Office of Special Education and Rehabilitative Services, Department of Education.

ACTION: Notice.

Overview Information: National Institute on Disability and Rehabilitation Research (NIDRR)—Disability and Rehabilitation Research Projects and Centers Program—Minority-Serving Institution Advanced Rehabilitation Research Training Projects Notice inviting applications for new awards for fiscal year (FY) 2013.

Catalog of Federal Domestic Assistance (CFDA) Number: 84.133P–3.

Dates:

Applications Available: February 1, 2013.

Date of Pre-Application Meeting: February 22, 2013.

Deadline for Transmittal of Applications: April 2, 2013.

Full Text of Announcement

I. Funding Opportunity Description

Purpose of Program: The purpose of the Advanced Rehabilitation Research Training (ARRT) Projects program is to provide advanced research training and experience to individuals with doctorates, or similar advanced degrees, who have clinical or other relevant experience. ARRT projects train rehabilitation researchers, including researchers with disabilities, with particular attention to research areas that support the implementation and objectives of the Rehabilitation Act of 1973, as amended (Act), and that improve the effectiveness of services authorized under the Act.

The purpose of this competition is to improve the capacity of minority entities to develop and support disability and rehabilitation research training opportunities, by limiting eligibility for ARRT grants to minority entities. Section 21(b)(2)(A) of the Act authorizes NIDRR to make awards to minority entities and Indian tribes to carry out activities authorized under Title II of the Act.

Note: This program is in concert with NIDRR's currently approved long-range plan (the Plan). The Plan is comprehensive and integrates many issues relating to disability and rehabilitation research topics. The Plan, which was published in the **Federal Register** on February 15, 2006 (71 FR 8166), can be accessed on the Internet at the following site: *www.ed.gov/about/offices/list/osers/nidrr/policy.html.*

Through the implementation of the Plan, NIDRR seeks to (1) improve the quality and utility of disability and rehabilitation research; (2) foster an exchange of expertise, information, and training methods to facilitate the advancement of knowledge and understanding of the unique needs of individuals with disabilities from traditionally underserved populations; (3) determine the best strategies and programs to improve rehabilitation outcomes for individuals with disabilities from underserved populations; (4) identify research gaps; (5) identify mechanisms for integrating research and practice; and (6) disseminate findings.

Priority: In accordance with 34 CFR 75.105(b)(2)(ii), this priority is from the regulations for this program (34 CFR 350.12 and 350.64 through 350.65).

Absolute Priority: For FY 2013, and any subsequent year in which we make awards from the list of unfunded applicants from this competition, this priority is an absolute priority. Under 34 CFR 75.105(c)(3) we consider only applications that meet this priority.

This priority is: *Minority-Serving Institution (MSI) Advanced Rehabilitation Research Training Projects.*

This MSI–ARRT priority is intended to improve the capacity of minority entities, as defined in section 21 of the Act, to develop and support disability and rehabilitation research training opportunities. ARRT projects must (1) recruit and select candidates for advanced research training; (2) provide a training program that includes didactic and classroom instruction, is multidisciplinary, and emphasizes scientific methodology, and may involve collaboration among institutions; (3) provide research experience, laboratory experience or its equivalent in a community-based research setting, and a practicum that involve each individual in clinical research and in practical activities with organizations representing individuals with disabilities; (4) provide academic mentorship or guidance, and opportunities for scientific collaboration with qualified researchers at the host university and other appropriate institutions; and (5) provide opportunities for participation in the development of professional presentations and publications, and for attendance at professional conferences and meetings, as appropriate for the individual's field of study and level of experience.

The ARRT project must provide training to individuals for at least one academic year, unless a longer training period is necessary to ensure that each trainee is qualified to conduct independent research upon completion of the course of training; and require trainees to devote at least 80 percent of their time to the activities of the training program during the training period.

Note: We expect an applicant to articulate goals, objectives, and expected outcomes for the research training activities. An applicant should describe expected public benefits of these training activities, especially benefits for individuals with disabilities, and propose projects that are optimally designed to demonstrate outcomes that are consistent with the proposed goals. Each applicant is encouraged to include information describing how it will measure outcomes, including the indicators for determining that results have occurred. Submission of this measurement information is voluntary, except where required by the selection criteria listed in the application package.

Program Authority: 29 U.S.C. 762(k) and 29 U.S.C. 718.

Applicable Regulations: (a) The Education Department General Administrative Regulations (EDGAR) in 34 CFR parts 74, 75, 77, 80, 81, 82, 84, 86, and 97. (b) The Education Department suspension and debarment regulations in 2 CFR part 3485. (c) The regulations for this program in 34 CFR part 350.

II. Award Information

Type of Award: Discretionary grants.

Estimated Available Funds: The Administration has requested $106,817,000 for NIDRR for FY 2013, of which we intend to use an estimated $150,000 for this ARRT competition. The actual level of funding, if any, depends on final congressional action. However, we are inviting applications to allow enough time to complete the grant process if Congress appropriates funds for this program.

Contingent upon the availability of funds and the quality of applications, we may make additional awards in FY 2013 from the list of unfunded applicants from this competition.

Estimated Range of Awards: $147,000 to $150,000.

Estimated Average Size of Awards: $150,000.

Maximum Award: We will reject any application that proposes a budget exceeding $150,000 for a single budget period of 12 months. The Assistant Secretary for Special Education and Rehabilitative Services may change the maximum amount through a notice published in the **Federal Register**.

Note: Consistent with 34 CFR 75.562, indirect cost reimbursement for a training grant is limited to eight percent of a modified total direct cost base, defined as total direct costs less stipends, tuition and related fees, equipment, and the amount of each subaward in excess of $25,000. Indirect costs would be determined in the grantee's negotiated indirect cost rate agreement if that amount is less than the amount calculated under the formula above.

Estimated Number of Awards: 1.

Note: The Department is not bound by any estimates in this notice.

Project Period: Up to 60 months. We will reject any application that proposes a project period exceeding 60 months. The Assistant Secretary for Special Education and Rehabilitative Services may change the maximum project period through a notice published in the **Federal Register**.

III. Eligibility Information

1. *Eligible Applicants:* Parties eligible to apply for MSI ARRT Projects grants are limited to minority entities and Indian tribes as authorized by section 21(b)(2)(A) of the Act. A minority entity is defined as a historically black college or university (a part B institution, as defined in section 322(2) of the Higher Education Act of 1965, as amended), a Hispanic-serving institution of higher education, an American Indian tribal college or university, or another institution of higher education whose minority student enrollment is at least 50 percent.

2. *Cost Sharing or Matching:* This program does not require cost sharing or matching. However, any applicant may voluntarily promise to share in the cost of the ARRT project by supplementing the amount of the stipend paid to trainees with additional funds beyond the maximum awarded under this program. The policies governing grantee cost sharing or matching are as follows:

a. Cost sharing or matching is the portion of project costs not borne by the Federal Government. Applications submitted under this program with voluntary cost sharing to supplement trainee stipends must use funds from non-Federal sources (34 CFR 74.23(a)(5)).

b. Any cost sharing promised by the grantee in its application must be fully documented and accounted for in the grantee's budget and expenditure records and reports. Applications submitted for funding that have voluntary cost-sharing must include—

- The specific contributions proposed;
- The source of the cost sharing; and
- In the case of in-kind contributions, a description of how the value was determined for the donated or contributed services or goods.

c. It is the policy of the Department that this additional cost share or match becomes part of the grantee's budget and therefore a condition of the grant. According to 34 CFR 74.25, any changes to an applicant's budget can be made only with the prior written approval of the Department.

IV. Application and Submission Information

1. *Address to Request Application Package:* You can obtain an application package via the Internet or from the Education Publications Center (ED Pubs). To obtain a copy via the Internet, use the following address: *www.ed.gov/fund/grant/apply/grantapps/index.html.* To obtain a copy from ED Pubs, write, fax, or call the following: ED Pubs, U.S. Department of Education, P.O. Box 22207, Alexandria, VA 22304. Telephone, toll free: 1–877–433–7827. FAX: (703) 605–6794. If you use a telecommunications device for the deaf (TDD) or a text telephone (TTY), call, toll free: 1–877–576–7734.

You can contact ED Pubs at its Web site, also: *www.EDPubs.gov* or at its email address: *edpubs@inet.ed.gov.*

If you request an application from ED Pubs, be sure to identify this program as follows: CFDA number 84.133P.

Individuals with disabilities can obtain a copy of the application package in an accessible format (e.g., braille, large print, audiotape, or compact disc) by contacting the person or team listed under *Accessible Format* in section VIII of this notice.

2. *Content and Form of Application Submission:* Requirements concerning the content of an application are in the application package for this program, including the requirement for an applicant to provide assurances that it will comply with 34 CFR 350.64 and 350.65. The application package also includes the forms you must submit. Page Limit: The application narrative (Part III of the application) is where you, the applicant, address the selection criteria that reviewers use to evaluate your application. We recommend that you limit Part III to the equivalent of no more than 75 pages, using the following standards:

- A ''page'' is 8.5″ x 11″, on one side only, with 1″ margins at the top, bottom, and both sides.
- Double space (no more than three lines per vertical inch) all text in the application narrative, including titles, headings, footnotes, quotations, references, and captions, as well as all text in charts, tables, figures, and graphs.
- Use a font that is either 12 point or larger or no smaller than 10 pitch (characters per inch).
- Use one of the following fonts: Times New Roman, Courier, Courier New, or Arial.

The recommended page limit does not apply to Part I, the cover sheet; Part II, the budget section, including the narrative budget justification; Part IV, the assurances and certifications; or the one-page abstract, the resumes, the bibliography, or the letters of support. However, the page limit does apply to all of the application narrative section (Part III).

An applicant should consult NIDRR's Plan when preparing its application. The Plan is organized around the following research domains: (1) Community Living and Participation; (2) Health and Function; (3) Technology; (4) Employment; and (5) Demographics. Each applicant should clearly indicate, for each application, the domain under which it is applying.

3. *Submission Dates and Times:*

Applications Available: February 1, 2013.

Date of Pre-Application Meeting: Interested parties are invited to participate in a pre-application meeting and to receive information and technical assistance through individual consultation with NIDRR staff. The pre-application meeting will be held on February 22, 2013. Interested parties may participate in this meeting by conference call with NIDRR staff from the Office of Special Education and Rehabilitative Services between 1:00 p.m. and 3:00 p.m., Washington, DC time. NIDRR staff also will be available from 3:30 p.m. to 4:30 p.m., Washington, DC time, on the same day, by telephone, to provide information and technical assistance through individual consultation. For further information or to make arrangements to participate in the meeting via conference call or for an individual consultation, contact Marlene Spencer as follows:

Marlene Spencer, U.S. Department of Education, 400 Maryland Avenue SW., Potomac Center Plaza (PCP), Room 5133, Washington, DC 20202–2700. Telephone: (202) 245–7532 or by email: *marlene.spencer@ed.gov.*

Deadline for Transmittal of Applications: April 2, 2013.

Applications for grants under this program must be submitted electronically using the Grants.gov Apply site (Grants.gov). For information (including dates and times) about how to submit your application electronically, or in paper format by mail or hand delivery if you qualify for an exception to the electronic submission requirement, please refer to section IV.7. *Other Submission Requirements* of this notice.

We do not consider an application that does not comply with the deadline requirements.

Individuals with disabilities who need an accommodation or auxiliary aid in connection with the application process should contact one of the persons listed under *For Further Information Contact* in section VII of this notice. If the Department provides an accommodation or auxiliary aid to an individual with a disability in connection with the application process, the individual's application remains subject to all other requirements and limitations in this notice.

4. *Intergovernmental Review:* This program is not subject to Executive Order 12372 and the regulations in 34 CFR part 79.

5. *Funding Restrictions:* We reference regulations outlining funding restrictions in the *Applicable Regulations* section of this notice.

6. *Data Universal Numbering System Number, Taxpayer Identification Number, and Central Contractor Registry:* To do business with the Department of Education, you must—

a. Have a Data Universal Numbering System (DUNS) number and a Taxpayer Identification Number (TIN);

b. Register both your DUNS number and TIN with the Central Contractor Registry (CCR)—and, after July 24, 2012, with the System for Award Management (SAM), the Government's primary registrant database;

c. Provide your DUNS number and TIN on your application; and

d. Maintain an active CCR or SAM registration with current information while your application is under review by the Department and, if you are awarded a grant, during the project period.

You can obtain a DUNS number from Dun and Bradstreet. A DUNS number can be created within one business day.

If you are a corporate entity, agency, institution, or organization, you can obtain a TIN from the Internal Revenue Service. If you are an individual, you can obtain a TIN from the Internal Revenue Service or the Social Security Administration. If you need a new TIN, please allow 2–5 weeks for your TIN to become active.

The CCR or SAM registration process may take five or more business days to complete. If you are currently registered with the CCR, you may not need to make any changes. However, please make certain that the TIN associated with your DUNS number is correct. Also note that you will need to update your registration annually. This may take three or more business days to complete. Information about SAM is available at SAM.gov.

In addition, if you are submitting your application via Grants.gov, you must (1) be designated by your organization as an Authorized Organization Representative (AOR); and (2) register yourself with Grants.gov as an AOR. Details on these steps are outlined at the following Grants.gov Web page: *www.grants.gov/applicants/get_registered.jsp.*

7. *Other Submission Requirements:* Applications for grants under this program must be submitted electronically unless you qualify for an exception to this requirement in accordance with the instructions in this section.

a. *Electronic Submission of Applications.* Applications for grants under the MSI–ARRT Projects program, CFDA Number 84.133P–3, must be submitted electronically using the Governmentwide Grants.gov Apply site at *www.Grants.gov*. Through this site, you will be able to download a copy of the application package, complete it offline, and then upload and submit your application. You may not email an electronic copy of a grant application to us.

We will reject your application if you submit it in paper format unless, as described elsewhere in this section, you qualify for one of the exceptions to the electronic submission requirement and submit, no later than two weeks before the application deadline date, a written statement to the Department that you qualify for one of these exceptions. Further information regarding calculation of the date that is two weeks before the application deadline date is provided later in this section under *Exception to Electronic Submission Requirement.*

You may access the electronic grant application for the MSI–ARRT Projects program at *www.Grants.gov.* You must search for the downloadable application package for this program by the CFDA number. Do not include the CFDA number's alpha suffix in your search (e.g., search for 84.133, not 84.133P).

Please note the following:

- When you enter the Grants.gov site, you will find information about submitting an application electronically through the site, as well as the hours of operation.
- Applications received by Grants.gov are date and time stamped. Your application must be fully uploaded and submitted and must be date and time stamped by the Grants.gov system no later than 4:30:00 p.m., Washington, DC time, on the application deadline date. Except as otherwise noted in this section, we will not accept your application if it is received—that is, date and time stamped by the Grants.gov system—after 4:30:00 p.m., Washington, DC time, on the application deadline date. We do not consider an application that does not comply with the deadline requirements. When we retrieve your application from Grants.gov, we will notify you if we are rejecting your application because it was date and time stamped by the Grants.gov system after 4:30:00 p.m., Washington, DC time, on the application deadline date.
- The amount of time it can take to upload an application will vary depending on a variety of factors, including the size of the application and the speed of your Internet connection. Therefore, we strongly recommend that you do not wait until the application deadline date to begin the submission process through Grants.gov.

• You should review and follow the Education Submission Procedures for submitting an application through Grants.gov that are included in the application package for this program to ensure that you submit your application in a timely manner to the Grants.gov system. You can also find the Education Submission Procedures pertaining to Grants.gov under News and Events on the Department's G5 system homepage at *www.G5.gov.*

• You will not receive additional point value because you submit your application in electronic format, nor will we penalize you if you qualify for an exception to the electronic submission requirement, as described elsewhere in this section, and submit your application in paper format.

• You must submit all documents electronically, including all information you typically provide on the following forms: The Application for Federal Assistance (SF 424), the Department of Education Supplemental Information for SF 424, Budget Information—Non-Construction Programs (ED 524), and all necessary assurances and certifications.

• You must upload any narrative sections and all other attachments to your application as files in a PDF (Portable Document) read-only, non-modifiable format. Do not upload an interactive or fillable PDF file. If you upload a file type other than a read-only, non-modifiable PDF or submit a password-protected file, we will not review that material. Additional, detailed information on how to attach files is in the application instructions.

• Your electronic application must comply with any page-limit requirements described in this notice.

• After you electronically submit your application, you will receive from Grants.gov an automatic notification of receipt that contains a Grants.gov tracking number. (This notification indicates receipt by Grants.gov only, not receipt by the Department.) The Department then will retrieve your application from Grants.gov and send a second notification to you by email. This second notification indicates that the Department has received your application and has assigned your application a PR/Award number (a Department-specified identifying number unique to your application).

• We may request that you provide us original signatures on forms at a later date.

Application Deadline Date Extension in Case of Technical Issues With the Grants.gov System: If you are experiencing problems submitting your application through Grants.gov, please contact the Grants.gov Support Desk, toll free, at 1–800–518–4726. You must obtain a Grants.gov Support Desk Case Number and must keep a record of it.

If you are prevented from electronically submitting your application on the application deadline date because of technical problems with the Grants.gov system, we will grant you an extension until 4:30:00 p.m., Washington, DC time, the following business day to enable you to transmit your application electronically or by hand delivery. You also may mail your application by following the mailing instructions described elsewhere in this notice.

If you submit an application after 4:30:00 p.m., Washington, DC time, on the application deadline date, please contact one of the persons listed under *For Further Information Contact* in section VII of this notice and provide an explanation of the technical problem you experienced with Grants.gov, along with the Grants.gov Support Desk Case Number. We will accept your application if we can confirm that a technical problem occurred with the Grants.gov system and that that problem affected your ability to submit your application by 4:30:00 p.m., Washington, DC time, on the application deadline date. The Department will contact you after a determination is made on whether your application will be accepted.

Note: The extensions to which we refer in this section apply only to the unavailability of, or technical problems with, the Grants.gov system. We will not grant you an extension if you failed to fully register to submit your application to Grants.gov before the application deadline date and time or if the technical problem you experienced is unrelated to the Grants.gov system.

Exception to Electronic Submission Requirement: You qualify for an exception to the electronic submission requirement, and may submit your application in paper format, if you are unable to submit an application through the Grants.gov system because—

• You do not have access to the Internet; or

• You do not have the capacity to upload large documents to the Grants.gov system; and

• No later than two weeks before the application deadline date (14 calendar days or, if the fourteenth calendar day before the application deadline date falls on a Federal holiday, the next business day following the Federal holiday), you mail or fax a written statement to the Department, explaining which of the two grounds for an exception prevents you from using the Internet to submit your application.

If you mail your written statement to the Department, it must be postmarked no later than two weeks before the application deadline date. If you fax your written statement to the Department, we must receive the faxed statement no later than two weeks before the application deadline date.

Address and mail or fax your statement to: Marlene Spencer, U.S. Department of Education, 400 Maryland Avenue SW., Room 5133, Potomac Center Plaza, Washington, DC 20202–2700. FAX: (202) 245–7323.

Your paper application must be submitted in accordance with the mail or hand delivery instructions described in this notice.

b. *Submission of Paper Applications by Mail.*

If you qualify for an exception to the electronic submission requirement, you may mail (through the U.S. Postal Service or a commercial carrier) your application to the Department. You must mail the original and two copies of your application, on or before the application deadline date, to the Department at the following address: U.S. Department of Education, Application Control Center, Attention: (CFDA Number 84.133P–3) LBJ Basement Level 1, 400 Maryland Avenue SW., Washington, DC 20202–4260.

You must show proof of mailing consisting of one of the following:

(1) A legibly dated U.S. Postal Service postmark.

(2) A legible mail receipt with the date of mailing stamped by the U.S. Postal Service.

(3) A dated shipping label, invoice, or receipt from a commercial carrier.

(4) Any other proof of mailing acceptable to the Secretary of the U.S. Department of Education.

If you mail your application through the U.S. Postal Service, we do not accept either of the following as proof of mailing:

(1) A private metered postmark.

(2) A mail receipt that is not dated by the U.S. Postal Service.

If your application is postmarked after the application deadline date, we will not consider your application.

Note: The U.S. Postal Service does not uniformly provide a dated postmark. Before relying on this method, you should check with your local post office.

c. *Submission of Paper Applications by Hand Delivery.*

If you qualify for an exception to the electronic submission requirement, you (or a courier service) may deliver your paper application to the Department by hand. You must deliver the original and

two copies of your application by hand, on or before the application deadline date, to the Department at the following address: U.S. Department of Education, Application Control Center, Attention: (CFDA Number 84.133P–3), 550 12th Street SW., Room 7041, Potomac Center Plaza, Washington, DC 20202–4260.

The Application Control Center accepts hand deliveries daily between 8:00 a.m. and 4:30:00 p.m., Washington, DC time, except Saturdays, Sundays, and Federal holidays.

Note for Mail or Hand Delivery of Paper Applications: If you mail or hand deliver your application to the Department—

(1) You must indicate on the envelope and—if not provided by the Department—in Item 11 of the SF 424 the CFDA number, including suffix letter, if any, of the program under which you are submitting your application; and

(2) The Application Control Center will mail to you a notification of receipt of your grant application. If you do not receive this notification within 15 business days from the application deadline date, you should call the U.S. Department of Education Application Control Center at (202) 245–6288.

V. Application Review Information

1. *Selection Criteria:* The selection criteria for this program are from 34 CFR 350.54 and are listed in the application package.

2. *Review and Selection Process:* We remind potential applicants that in reviewing applications in any discretionary grant competition, the Secretary may consider, under 34 CFR 75.217(d)(3), the past performance of the applicant in carrying out a previous award, such as the applicant's use of funds, achievement of project objectives, and compliance with grant conditions. The Secretary may also consider whether the applicant failed to submit a timely performance report or submitted a report of unacceptable quality.

In addition, in making a competitive grant award, the Secretary also requires various assurances including those applicable to Federal civil rights laws that prohibit discrimination in programs or activities receiving Federal financial assistance from the Department of Education (34 CFR 100.4, 104.5, 106.4, 108.8, and 110.23).

3. *Special Conditions:* Under 34 CFR 74.14 and 80.12, the Secretary may impose special conditions on a grant if the applicant or grantee is not financially stable; has a history of unsatisfactory performance; has a financial or other management system that does not meet the standards in 34 CFR parts 74 or 80, as applicable; has not fulfilled the conditions of a prior grant; or is otherwise not responsible.

VI. Award Administration Information

1. *Award Notices:* If your application is successful, we notify your U.S. Representative and U.S. Senators and send you a Grant Award Notification (GAN). We may notify you informally, also.

If your application is not evaluated or not selected for funding, we notify you.

2. *Administrative and National Policy Requirements:* We identify administrative and national policy requirements in the application package and reference these and other requirements in the *Applicable Regulations* section of this notice.

We reference the regulations outlining the terms and conditions of an award in the *Applicable Regulations* section of this notice and include these and other specific conditions in the GAN. The GAN also incorporates your approved application as part of your binding commitments under the grant.

3. *Reporting:* (a) If you apply for a grant under this competition, you must ensure that you have in place the necessary processes and systems to comply with the reporting requirements in 2 CFR part 170 should you receive funding under the competition. This does not apply if you have an exception under 2 CFR 170.110(b).

(b) At the end of your project period, you must submit a final performance report, including financial information, as directed by the Secretary. If you receive a multi-year award, you must submit an annual performance report that provides the most current performance and financial expenditure information as directed by the Secretary under 34 CFR 75.118. The Secretary may also require more frequent performance reports under 34 CFR 75.720(c). For specific requirements on reporting, please go to *www.ed.gov/fund/grant/apply/appforms/appforms.html.*

4. *Performance Measures:* To evaluate the overall success of its research program, NIDRR assesses the quality of its funded projects through review of grantee performance and products. Each year, NIDRR examines a portion of its grantees to determine the extent to which grantees are conducting high-quality research and related activities that lead to high-quality products. Performance measures for the MSI–ARRT Projects program include—

- The percentage of NIDRR-supported fellows, post-doctoral trainees, and doctoral students who publish results of NIDRR-sponsored research in refereed journals.
- The average number of publications per award based on NIDRR-funded research and development activities in refereed journals.

NIDRR uses information submitted by grantees as part of their Annual Performance Reports (APRs) to assess performance. NIDRR also determines, using information submitted as part of the grantees' APRs, the number of publications in refereed journals that are based on NIDRR-funded research and development activities.

Department of Education program performance reports, which include information on NIDRR programs, are available on the Department's Web site: *www.ed.gov/about/offices/list/opepd/sas/index.html.*

5. *Continuation Awards:* In making a continuation award, the Secretary may consider, under 34 CFR 75.253, the extent to which a grantee has made ''substantial progress toward meeting the objectives in its approved application.'' This consideration includes the review of a grantee's progress in meeting the targets and projected outcomes in its approved application, and whether the grantee has expended funds in a manner that is consistent with its approved application and budget. In making a continuation grant, the Secretary also considers whether the grantee is operating in compliance with the assurances in its approved application, including those applicable to Federal civil rights laws that prohibit discrimination in programs or activities receiving Federal financial assistance from the Department (34 CFR 100.4, 104.5, 106.4, 108.8, and 110.23).

VII. Agency Contacts

For Further Information Contact: Marlene Spencer as follows:

Marlene Spencer, U.S. Department of Education, 400 Maryland Avenue SW., Room 5133, PCP, Washington, DC 20202–2700. Telephone: (202) 245–7532 or by email: *marlene.spencer@ed.gov.*

If you use a TDD or TTY, call the Federal Relay Service (FRS), toll free, at 1–800–877–8339.

VIII. Other Information

Accessible Format: Individuals with disabilities can obtain this document and a copy of the application package in an accessible format (e.g., braille, large print, audiotape, or compact disc) by contacting the Grants and Contracts Services Team, U.S. Department of Education, 400 Maryland Avenue SW., Room 5075, PCP, Washington, DC 20202–2550. Telephone: (202) 245–7363. If you use a TDD or a TTY, call the FRS, toll free, at 1–800–877–8339.

Electronic Access to This Document: The official version of this document is the document published in the **Federal Register**. Free Internet access to the official edition of the **Federal Register** and the Code of Federal Regulations is available via the Federal Digital System at: *www.gpo.gov/fdsys.* At this site you can view this document, as well as all other documents of this Department published in the **Federal Register**, in text or Adobe Portable Document Format (PDF). To use PDF you must have Adobe Acrobat Reader, which is available free at the site.

You may also access documents of the Department published in the **Federal Register** by using the article search feature at: *www.federalregister.gov.* Specifically, through the advanced search feature at this site, you can limit your search to documents published by the Department.

Dated: January 29, 2013.

Michael Yudin,

Acting Assistant Secretary for Special Education and Rehabilitative Services.

[FR Doc. 2013–02214 Filed 1–31–13; 8:45 am]

BILLING CODE 4000–01–P

DEPARTMENT OF ENERGY

National Coal Council

AGENCY: Department of Energy.

ACTION: Notice of open meeting.

SUMMARY: This notice announces a meeting of the National Coal Council (NCC). The Federal Advisory Committee Act (Pub. L. 92–463, 86 Stat. 770) requires that public notice of these meetings be announced in the **Federal Register**.

DATES: Thursday, March 7, 2013, 9:00 a.m. to 12:00 p.m.

ADDRESSES: Hunton & Williams LLP, 2200 Pennsylvania Avenue NW., Washington, DC 20037.

FOR FURTHER INFORMATION CONTACT: Dr. Robert J. Wright, U.S. Department of Energy; 4G–036/Forrestal Building, 1000 Independence Avenue SW., Washington, DC 20585–1290; Telephone: 202–586–0429.

SUPPLEMENTARY INFORMATION:

Purpose of Meeting: The March 2013 meeting of the National Coal Council.

Agenda:

1. Opening Remarks by NCC Chairman John Eaves
2. Howard Gruenspecht, U.S. Energy Information Administration: ''The U.S. Energy Outlook''
3. Fred Palmer, NCC Coal Policy Committee Chairman: Presentation of Summary of Past Council Studies
4. Mike Duncan, President, American Coalition for Clean Coal Electricity
5. Jim Butz, Vice President of Product Management, Novinda Corp.: ''Mercury Emissions Control at Coal-Based Generation Plants''
6. General Keith Alexander (Ret.): Presentation on ''Cyber Security in the U.S.'' (invited)
7. Adjourn

Public Participation: The meeting is open to the public. If you would like to file a written statement with the Council, you may do so either before or after the meeting. If you would like to make oral statements regarding any item on the agenda, you should contact Dr. Robert J. Wright, 202–586–0429 or *Robert.wright@hq.doe.gov* (email). You must make your request for an oral statement at least 5 business days before the meeting. Reasonable provision will be made to include oral statements on the scheduled agenda. The Chairperson of the Council will lead the meeting in a manner that facilitates the orderly conduct of business. Oral statements are limited to 10-minutes per organization and per person.

Minutes: The NCC will prepare meeting minutes within 45 days of the meeting. The minutes will be posted on the NCC Web site at *http://www.nationalcoalcouncil.org/.*

Issued at Washington, DC, on January 25, 2013.

LaTanya R. Butler,

Deputy Committee Management Officer.

[FR Doc. 2013–02167 Filed 1–31–13; 8:45 am]

BILLING CODE 6450–01–P

DEPARTMENT OF ENERGY

Federal Energy Regulatory Commission

Combined Notice of Filings #1

Take notice that the Commission received the following electric corporate filings:

Docket Numbers: EC13–68–000.

Applicants: Public Service Company of New Mexico, Delta Person GP, LLC, BHB Power, LLC, Delta Person, Limited Partnership.

Description: Joint Application for Authorization Under Section 203 of the Federal Power Act for Disposition of Jurisdictional Facilities and Request for Confidential Treatment of Delta Person Limited Partnership, et al.

Filed Date: 1/24/13.

Accession Number: 20130124–5149.

Comments Due: 5 p.m. ET 2/14/13.

Take notice that the Commission received the following electric rate filings:

Docket Numbers: ER10–1817–003.

Applicants: Southwestern Public Service Company.

Description: Supplement to June 29, 2012 Triennial Market Power Analysis of Southwestern Public Service Company.

Filed Date: 1/24/13.

Accession Number: 20130124–5146.

Comments Due: 5 p.m. ET 2/14/13.

Docket Numbers: ER10–1817–004; ER10–1818–003; ER10–1819–004; ER10–1820–006.

Applicants: Southwestern Public Service Company, Public Service Company of Colorado, Northern States Power Company, a Wisconsin Corporation, Northern States Power Company, a Wisconsin Corporation.

Description: Change in Status Report Compliance Filing by Xcel Energy Services Inc. on behalf of Northern States Power Company, a Minnesota Corporation, et. al.

Filed Date: 1/25/13.

Accession Number: 20130125–5090.

Comments Due: 5 p.m. ET 2/15/13.

Docket Numbers: ER10–1946–003; ER11–3859–005; ER11–3863–004; ER11–3861–004; ER11–3864–005; ER11–3866–005; ER12–192–003; ER11–3867–005; ER11–3857–005; ER12–1725–001.

Applicants: Broad River Energy LLC, Dighton Power, LLC, ECP Energy I, LLC, Empire Generating Co, LLC, EquiPower Resources Management, LLC, Lake Road Generating Company, L.P., Liberty Electric Power, LLC, MASSPOWER, Milford Power Company, LLC, AES Red Oak Power, LLC.

Description: Notice of Change in Status of Broad River Energy LLC, et. al.

Filed Date: 1/25/13.

Accession Number: 20130125–5089.

Comments Due: 5 p.m. ET 2/15/13.

Docket Numbers: ER12–2206–002.

Applicants: Southern California Edison Company.

Description: Compliance SGIA Filing with Western Antelope Dry Ranch LLC to be effective 7/6/2012.

Filed Date: 1/25/13.

Accession Number: 20130125–5002.

Comments Due: 5 p.m. ET 2/15/13.

Docket Numbers: ER12–2208–002.

Applicants: Southern California Edison Company.

Description: Compliance Filing SGIA with Western Antelope Blue Sky Ranch A LLC to be effective 7/6/2012.

Filed Date: 1/25/13.

Accession Number: 20130125–5001.

Comments Due: 5 p.m. ET 2/15/13.

Docket Numbers: ER13–530–001.

Applicants: Arizona Public Service Company.

Description: Refund Report Ajo Improvement Company, Docket No. ER13–530–001 to be effective N/A.

Filed Date: 1/25/13.
Accession Number: 20130125–5039.
Comments Due: 5 p.m. ET 2/15/13.

Docket Numbers: ER13–555–001.
Applicants: Michigan Electric Transmission Company, LLC.
Description: Amendment Filing of METC to be effective 2/12/2013.
Filed Date: 1/25/13.
Accession Number: 20130125–5058.
Comments Due: 5 p.m. ET 2/15/13.

Docket Numbers: ER13–797–000.
Applicants: EBRFUEL, LLC.
Description: Ebrfuel LLC, FERC Electric Tariff to be effective 3/24/2013.
Filed Date: 1/25/13.
Accession Number: 20130125–5020.
Comments Due: 5 p.m. ET 2/15/13.

Docket Numbers: ER13–798–000.
Applicants: GDF SUEZ Energy Marketing NA, Inc.
Description: Notice of Succession to be effective 1/26/2013.
Filed Date: 1/25/13.
Accession Number: 20130125–5022.
Comments Due: 5 p.m. ET 2/15/13.

Docket Numbers: ER13–799–000.
Applicants: PacifiCorp.
Description: CAISO First Amended Operating Agreement Concurrence to be effective 4/1/2013.
Filed Date: 1/25/13.
Accession Number: 20130125–5069.
Comments Due: 5 p.m. ET 2/15/13.

Take notice that the Commission received the following land acquisition reports:

Docket Numbers: LA12–4–000.
Applicants: Duke Energy Corporation.
Description: Quarterly Land Acquisition Report of Duke Energy MBR Affiliates.
Filed Date: 1/25/13.
Accession Number: 20130125–5103.
Comments Due: 5 p.m. ET 2/15/13.

The filings are accessible in the Commission's eLibrary system by clicking on the links or querying the docket number.

Any person desiring to intervene or protest in any of the above proceedings must file in accordance with Rules 211 and 214 of the Commission's Regulations (18 CFR 385.211 and 385.214) on or before 5:00 p.m. Eastern time on the specified comment date. Protests may be considered, but intervention is necessary to become a party to the proceeding.

eFiling is encouraged. More detailed information relating to filing requirements, interventions, protests, service, and qualifying facilities filings can be found at: *http://www.ferc.gov/docs-filing/efiling/filing-req.pdf.* For other information, call (866) 208–3676 (toll free). For TTY, call (202) 502–8659.

Dated: January 25, 2013.

Nathaniel J. Davis, Sr.,

Deputy Secretary.

[FR Doc. 2013–02184 Filed 1–31–13; 8:45 am]

BILLING CODE 6717–01–P

DEPARTMENT OF ENERGY

Federal Energy Regulatory Commission

Combined Notice of Filings #1

Take notice that the Commission received the following electric rate filings:

Docket Numbers: ER10–1707–002; ER11–3623–001; ER11–3460–003.
Applicants: Hess Corporation, Hess Small Business Services LLC, Bayonne Energy Center, LLC.
Description: Notice of Change in Status of Hess Corporation, et al.
Filed Date: 1/24/13.
Accession Number: 20130124–5103.
Comments Due: 5 p.m. ET 2/14/13.

Docket Numbers: ER10–2331–017; ER10–2343–017; ER10–2319–016; ER10–2320–016; ER10–2317–015; ER10–2322–017; ER10–2324–016; ER10–2325–015; ER10–2332–016; ER10–2326–017; ER10–2327–018; ER10–2328–016; ER11–4609–015; ER10–2330–017.
Applicants: J.P. Morgan Ventures Energy Corporation, J.P. Morgan Commodities Canada Corporation, BE Alabama LLC, BE Allegheny LLC, BE CA LLC, BE Ironwood LLC, BE KJ LLC, BE Louisiana LLC, BE Rayle LLC, Cedar Brakes I, L.L.C., Cedar Brakes II, L.L.C., Central Power & Lime LLC, Triton Power Michigan LLC, Utility Contract Funding, L.L.C.
Description: JPMorgan Sellers Notice of Non-Material Change in Status re: NewPage Corporation.
Filed Date: 1/22/13.
Accession Number: 20130122–5387.
Comments Due: 5 p.m. ET 2/12/13.

Docket Numbers: ER13–487–001.
Applicants: Dogwood Energy LLC.
Description: Dogwood Energy LLC submits Amendment to Category 1 Filing to be effective 8/30/2010.
Filed Date: 1/24/13.
Accession Number: 20130124–5108.
Comments Due: 5 p.m. ET 2/14/13.

Docket Numbers: ER13–791–000.
Applicants: Midwest Independent Transmission System Operator, Inc.
Description: 01–23–2013 METC-Traverse City Light & Power IFA to be effective 3/24/2013.
Filed Date: 1/23/13.
Accession Number: 20130123–5164.
Comments Due: 5 p.m. ET 2/13/13.

Docket Numbers: ER13–792–000.
Applicants: New York Independent System Operator, Inc., PJM Interconnection, L.L.C.
Description: NYISO filing of Tariffs and NYISO/PJM JOA to Implement HTP Scheduled Line to be effective 4/15/2013.
Filed Date: 1/24/13.
Accession Number: 20130124–5053.
Comments Due: 5 p.m. ET 2/14/13.

Docket Numbers: ER13–793–000.
Applicants: East Kentucky Power Cooperative, Inc.
Description: East Kentucky Power Cooperative Petition to Submit to PJM a Transitional Fixed Resource Requirement Plan for Integration into PJM.
Filed Date: 1/23/13.
Accession Number: 20130123–5201.
Comments Due: 5 p.m. ET 2/13/13.

Docket Numbers: ER13–794–000.
Applicants: California Independent System Operator Corporation.
Description: California Independent System Operator Corporation submits tariff filing per 35.13(a)(2)(iii: 2013—CAISO's Rate Schedule No. 65 to be effective 4/1/2013.
Filed Date: 1/24/13.
Accession Number: 20130124–5099.
Comments Due: 5 p.m. ET 2/14/13.

Docket Numbers: ER13–795–000.
Applicants: North American Energy, LLC.
Description: Notice of Cancellation of North American Energy, LLC.
Filed Date: 1/24/13.
Accession Number: 20130124–5107.
Comment Due: 5 p.m. ET 2/14/13.

Docket Numbers: ER13–796–000.
Applicants: Central Hudson Gas & Electric Corporation.
Description: Central Hudson Gas & Electric Corporation submits FERC Rate Schedule 202—2012 Update to be effective 1/10/2013.
Filed Date: 1/24/13.
Accession Number: 20130124–5113.
Comments Due: 5 p.m. ET 2/14/13.

The filings are accessible in the Commission's eLibrary system by clicking on the links or querying the docket number.

Any person desiring to intervene or protest in any of the above proceedings must file in accordance with Rules 211 and 214 of the Commission's Regulations (18 CFR 385.211 and 385.214) on or before 5:00 p.m. Eastern time on the specified comment date. Protests may be considered, but intervention is necessary to become a party to the proceeding.

eFiling is encouraged. More detailed information relating to filing requirements, interventions, protests, service, and qualifying facilities filings

can be found at: *http://www.ferc.gov/docs-filing/efiling/filing-req.pdf.* For other information, call (866) 208–3676 (toll free). For TTY, call (202) 502–8659.

Dated: January 24, 2013.

Nathaniel J. Davis, Sr.,

Deputy Secretary.

[FR Doc. 2013–02183 Filed 1–31–13; 8:45 am]

BILLING CODE 6717–01–P

DEPARTMENT OF ENERGY

Federal Energy Regulatory Commission

Combined Notice of Filings #2

Take notice that the Commission received the following electric corporate filings:

Docket Numbers: EC13–69–000.
Applicants: NewPage Corporation, GS Funds, Oaktree Capital.
Description: Joint Application for Authorization Under Section 203 of the Federal Power Act and Request for Expedited Consideration of NewPage Corporation, et al.
Filed Date: 1/25/13.
Accession Number: 20130125–5157.
Comments Due: 5 p.m. ET 2/15/13.

Take notice that the Commission received the following electric rate filings:

Docket Numbers: ER12–2611–002.
Applicants: NorthWestern Corporation.
Description: SA 646—SGIA with NPS re Mammoth Project to be effective 9/12/2012.
Filed Date: 1/25/13.
Accession Number: 20130125–5118.
Comments Due: 5 p.m. ET 2/15/13.

Docket Numbers: ER13–780–001.
Applicants: New York Independent System Operator, Inc.
Description: NYISO amendment to correct effective date in eTariff to be effective 3/20/2013.
Filed Date: 1/25/13.
Accession Number: 20130125–5161.
Comments Due: 5 p.m. ET 2/15/13.

Docket Numbers: ER13–800–000.
Applicants: MRL Energy, LLC.
Description: Cancellation of MBR Tariff to be effective 1/25/2013.
Filed Date: 1/25/13.
Accession Number: 20130125–5117.
Comments Due: 5 p.m. ET 2/15/13.

Docket Numbers: ER13–801–000.
Applicants: Midwest Independent Transmission System, Ameren Illinois Company.
Description: Midwest Independent Transmission System Operator, Inc. submits tariff filing per 35: 01–25–13 AIC Attachment O Compliance filing to be effective 1/2/2013.
Filed Date: 1/25/13.
Accession Number: 20130125–5176.
Comments Due: 5 p.m. ET 2/15/13.

Take notice that the Commission received the following qualifying facility filings:

Docket Numbers: QF12–174–000.
Applicants: Winona County Wind, LLC.
Description: Supplement to January 15, 2013 Refund Report of Winona County Wind, LLC.
Filed Date: 1/25/13.
Accession Number: 20130125–5150.
Comments Due: 5 p.m. ET 1/25/13.

The filings are accessible in the Commission's eLibrary system by clicking on the links or querying the docket number.

Any person desiring to intervene or protest in any of the above proceedings must file in accordance with Rules 211 and 214 of the Commission's Regulations (18 CFR 385.211 and 385.214) on or before 5:00 p.m. Eastern time on the specified comment date. Protests may be considered, but intervention is necessary to become a party to the proceeding.

eFiling is encouraged. More detailed information relating to filing requirements, interventions, protests, service, and qualifying facilities filings can be found at: *http://www.ferc.gov/docs-filing/efiling/filing-req.pdf.* For other information, call (866) 208–3676 (toll free). For TTY, call (202) 502–8659.

Dated: January 25, 2013.

Nathaniel J. Davis, Sr.,

Deputy Secretary.

[FR Doc. 2013–02185 Filed 1–31–13; 8:45 am]

BILLING CODE 6717–01–P

DEPARTMENT OF ENERGY

Federal Energy Regulatory Commission

[Docket No. EL13–44–000]

City of Fallon, Nevada; Truckee Donner Public Utility District v. NV Energy Operating Companies; Notice of Complaint

Take notice that on January 22, 2013, pursuant to Rules 206 and 212 of the Rules of Practice and Procedure of the Federal Energy Regulatory Commission (Commission), 18 CFR 385.206 and 385.212 and section 206 and 306 of the Federal Power Act, 16 U.S.C. 824(e) and 825(e), the City of Fallon, Nevada and Truckee Donner Public Utility District (collectively, Complainants) filed a formal complaint against NV Energy Operating Companies (Respondent), alleging that the Respondent (1) has improperly implemented the current Zone A imbalance provisions of their open access transmission tariff (NV Energy OATT) and (2) should replace the imbalance provisions currently reflected in Schedules 4 and 9 of the NV Energy OATT, with the *pro forma* provisions on a forward-looking basis, because they are no longer just and reasonable.

The Complainants certify that copies of the complaint were served on the contacts for the Respondents as listed on the Commission's list of Corporate Officials and on parties of the regulatory agencies the Complainants reasonably expect to be affected by this complaint.

Any person desiring to intervene or to protest this filing must file in accordance with Rules 211 and 214 of the Commission's Rules of Practice and Procedure (18 CFR 385.211, 385.214). Protests will be considered by the Commission in determining the appropriate action to be taken, but will not serve to make protestants parties to the proceeding. Any person wishing to become a party must file a notice of intervention or motion to intervene, as appropriate. The Respondent's answer and all interventions, or protests must be filed on or before the comment date. The Respondent's answer, motions to intervene, and protests must be served on the Complainants.

The Commission encourages electronic submission of protests and interventions in lieu of paper using the ''eFiling'' link at *http://www.ferc.gov.* Persons unable to file electronically should submit an original and 14 copies of the protest or intervention to the Federal Energy Regulatory Commission, 888 First Street NE., Washington, DC 20426.

This filing is accessible on-line at *http://www.ferc.gov,* using the ''eLibrary'' link and is available for review in the Commission's Public Reference Room in Washington, DC. There is an ''eSubscription'' link on the web site that enables subscribers to receive email notification when a document is added to a subscribed docket(s). For assistance with any FERC Online service, please email *FERCOnlineSupport@ferc.gov,* or call (866) 208–3676 (toll free). For TTY, call (202) 502–8659.

Comment Date: 5:00 p.m. Eastern Time on February 11, 2013.

Dated: January 25, 2013.

Nathaniel J. Davis, Sr.,

Deputy Secretary.

[FR Doc. 2013–02181 Filed 1–31–13; 8:45 am]

BILLING CODE 6717–01–P

DEPARTMENT OF ENERGY

Federal Energy Regulatory Commission

[Docket No. EL13–43–000]

Council of the City of New Orleans; Mississippi Public Service Commission; Arkansas Public Service Commission; Notice of Petition for Declaratory Order

Take notice that on January 22, 2013, pursuant to section 207 of the Federal Energy Regulatory Commission's (Commission) Rules of Practice and Procedure 18 CFR 385.207, the Council of the City of New Orleans, the Mississippi Public Service Commission and the Arkansas Public Service Commission (together, the Entergy Retail Regulators) filed a petition for declaratory order requesting the Commission issue a declaratory order determining whether the Entergy Operating Companies' proposed avoided cost calculation methodology satisfies the Public Utility Regulatory Policies Act of 1978 (Petition) and request for exemption from filing fee. On January 23, 2013 the Entergy Retail Regulators filed errata to the Petition.

Any person desiring to intervene or to protest this filing must file in accordance with Rules 211 and 214 of the Commission's Rules of Practice and Procedure (18 CFR 385.211, 385.214). Protests will be considered by the Commission in determining the appropriate action to be taken, but will not serve to make protestants parties to the proceeding. Any person wishing to become a party must file a notice of intervention or motion to intervene, as appropriate. Such notices, motions, or protests must be filed on or before the comment date. On or before the comment date, it is not necessary to serve motions to intervene or protests on persons other than the Applicant.

The Commission encourages electronic submission of protests and interventions in lieu of paper using the ''eFiling'' link at *http://www.ferc.gov*. Persons unable to file electronically should submit an original and 14 copies of the protest or intervention to the Federal Energy Regulatory Commission, 888 First Street NE., Washington, DC 20426.

This filing is accessible on-line at *http://www.ferc.gov*, using the ''eLibrary'' link and is available for review in the Commission's Public Reference Room in Washington, DC. There is an ''eSubscription'' link on the Web site that enables subscribers to receive email notification when a document is added to a subscribed docket(s). For assistance with any FERC Online service, please email *FERCOnlineSupport@ferc.gov,* or call (866) 208–3676 (toll free). For TTY, call (202) 502–8659.

Comment Date: 5:00 p.m. Eastern Time on February 21, 2013.

Dated: January 28, 2013.

Nathaniel J. Davis, Sr.,

Deputy Secretary.

[FR Doc. 2013–02182 Filed 1–31–13; 8:45 am]

BILLING CODE 6717–01–P

ENVIRONMENTAL PROTECTION AGENCY

[ER–FRL–9007–4]

Environmental Impacts Statements; Notice of Availability

Responsible Agency: Office of Federal Activities, General Information (202) 564–7146 or *http://www.epa.gov/compliance/nepa/.*

Weekly receipt of Environmental Impact Statements

Filed 01/22/2013 Through 01/25/2013

Pursuant to 40 CFR 1506.9.

Notice

Section 309(a) of the Clean Air Act requires that EPA make public its comments on EISs issued by other Federal agencies. EPA's comment letters on EISs are available at: *http://www.epa.gov/compliance/nepa/eisdata.html.*

SUPPLEMENTARY INFORMATION: As of October 1, 2012, EPA will not accept paper copies or CDs of EISs for filing purposes; all submissions on or after October 1, 2012 must be made through e-NEPA.

While this system eliminates the need to submit paper or CD copies to EPA to meet filing requirements, electronic submission does not change requirements for distribution of EISs for public review and comment. To begin using e-NEPA, you must first register with EPA's electronic reporting site—*https://cdx.epa.gov/epa_home.asp*

EIS No. 20130016, Draft EIS, USFS, MN, Boundary Waters Canoe Area Wilderness (BWCAW) Non-native Plant Management Project, Cook, Lake and St. Louis Counties, MN, Comment Period Ends: 03/18/2013, Contact: Jack Greenlee 218–229–8817.

EIS No. 20130017, Final EIS, AFS, OR, Rim Paunina Project and Forest Plan Amendments, Crescent Ranger District, Deschutes National Forest, Klamath County, OR, Comment Period Ends: 03/15/2013, Contact: Tim Foley 541–433–3200.

EIS No. 20130018, Final EIS, BIA, WA, Spokane Tribe of Indians West Plains Casino and Mixed-Use Development Project, Approval of Gaming Development and Management, Spokane County, WA, Review Period Ends: 03/04/2013, Contact: Dr. B.J. Howerton 503–231–6749.

Dated: January 29, 2013.

Cliff Rader,

Director, NEPA Compliance Division, Office of Federal Activities.

[FR Doc. 2013–02205 Filed 1–31–13; 8:45 am]

BILLING CODE 6560–50–P

ENVIRONMENTAL PROTECTION AGENCY

[FRL–9775–3]

National and Governmental Advisory Committees to the U.S. Representative to the Commission for Environmental Cooperation

AGENCY: Environmental Protection Agency (EPA).

ACTION: Notice of advisory committee meeting teleconference call.

SUMMARY: Under the Federal Advisory Committee Act, Public Law 92–463, EPA gives notice of a meeting of the National Advisory Committee (NAC) and Governmental Advisory Committee (GAC) to the U.S. Representative to the North American Commission for Environmental Cooperation (CEC). The National and Governmental Advisory Committees advise the EPA Administrator in her capacity as the U.S. Representative to the CEC Council. The Committees are authorized under Articles 17 and 18 of the North American Agreement on Environmental Cooperation (NAAEC), North American Free Trade Agreement Implementation Act, Public Law 103–182, and as directed by Executive Order 12915, entitled ''Federal Implementation of the North American Agreement on Environmental Cooperation.'' The NAC is composed of 14 members representing academia, environmental non-governmental organizations, and private industry. The GAC consists of 15 members representing state, local, and Tribal governments. The Committees are responsible for providing advice to the U.S. Representative on a wide range of strategic, scientific, technological, regulatory, and economic issues related to implementation and further elaboration of the NAAEC.

The purpose of this teleconference is to inform committee members on the status of Tribes in the U.S., Canada and Mexico. The presenter will be Mr. James

Anaya, Special Rapparteur on the rights of Indigenous peoples in the United Nations Office of the High Commissioner for Human Rights. A copy of the agenda will be posted at *http://www.epa.gov/ofacmo/nacgac-page.htm.*

DATES: The NAC/GAC will hold a public teleconference on Friday, February 15, 2013, from 12:30 p.m. to 1:30 p.m. Eastern Standard Time.

ADDRESSES: The meeting will be held at the U.S. EPA East Building, 1201 Constitution Ave. NW., Room 1132, Washington, DC 20004.

FOR FURTHER INFORMATION CONTACT: Oscar Carrillo, Designated Federal Officer, *carrillo.oscar@epa.gov,* 202–564–0347, U.S. EPA, Office of Federal Advisory Committee Management and Outreach (1601–M), 1200 Pennsylvania Avenue NW., Washington, DC 20460.

SUPPLEMENTARY INFORMATION: Requests to make oral comments or to provide written comments to NAC/GAC should be sent to Oscar Carrillo at *carrillo.oscar@epa.gov* by Thursday, February 7, 2013. The meeting is open to the public, with limited seating on a first-come, first-served basis. Members of the public wishing to participate in the teleconference should contact Oscar Carrillo at *carrillo.oscar@epa.gov* or (202) 564–0347 by February 7, 2013.

Meeting Access: For information on access or services for individuals with disabilities, please contact Oscar Carrillo at 202–564–0347 or *carrillo.oscar@epa.gov.* To request accommodation of a disability, please contact Oscar Carrillo, preferably at least 10 days prior to the meeting, to give EPA as much time as possible to process your request.

Dated: January 24, 2013.

Oscar Carrillo,

Designated Federal Officer.

[FR Doc. 2013–02215 Filed 1–31–13; 8:45 am]

BILLING CODE 6560–50–P

ENVIRONMENTAL PROTECTION AGENCY

[FRL–9775–1]

Clean Air Act Operating Permit Program; Petition for Objection to State Operating Permit for Noranda Alumina, LLC

AGENCY: Environmental Protection Agency (EPA).

ACTION: Notice of final action.

SUMMARY: This document announces that the EPA Administrator has responded to a citizen petition asking EPA to object to an operating permit (Permit Number 2453–V2) issued by the Louisiana Department of Environmental Quality (LDEQ). Specifically, the Administrator has denied the March 28, 2011 petition, submitted by the Louisiana Environmental Action Network (LEAN), Sierra Club, and O'Neil Couvillion (the Petitioners), to object to the operating permit issued on February 15, 2011 to Noranda Alumina, LLC, for the operation of the alumina production plant located in Gramercy, St James Parish, Louisiana. Sections 307(b) and 505(b)(2) of the Act provide that a petitioner may ask for judicial review of those portions of the petition which EPA denies in the United States Court of Appeals for the appropriate circuit. Any petition for review shall be filed within 60 days from the date this notice appears in the **Federal Register**, pursuant to section 307 of the Act.

ADDRESSES: You may review copies of the final Order, the petition, and other supporting information at EPA Region 6, 1445 Ross Avenue, Dallas, Texas 75202–2733.

EPA requests that if at all possible, you contact the individual listed in the **FOR FURTHER INFORMATION CONTACT** section to view copies of the final Order, petition, and other supporting information. You may view the hard copies Monday through Friday, from 9:00 a.m. to 3:00 p.m., excluding Federal holidays. If you wish to examine these documents, you should make an appointment at least 24 hours before the visiting day. Additionally, the final Order for Noranda Alumina LLC is available electronically at: *http://www.epa.gov/region07/air/title5/petitiondb/petitions/noranda_response2011.pdf.*

FOR FURTHER INFORMATION CONTACT: Brad Toups at (214) 665–7258, email address: *toups.brad@epa.gov* or the above EPA, Region 6 address.

SUPPLEMENTARY INFORMATION: The CAA affords EPA a 45-day period to review, and object to as appropriate, a Title V operating permit proposed by State permitting authorities. Section 505(b)(2) of the CAA authorizes any person to petition the EPA Administrator, within 60 days after the expiration of this review period, to object to a Title V operating permit if EPA has not done so. Petitions must be based only on objections to the permit that were raised with reasonable specificity during the public comment period provided by the State, unless the petitioner demonstrates that it was impracticable to raise these issues during the comment period or the grounds for the issue arose after this period.

EPA received a petition from the Petitioners dated March 28, 2011, requesting that EPA object to the issuance of the Title V operating permit to Noranda Alumina LLC (Noranda), for the operation of the alumina production plant in Gramercy, St. James Parish, Louisiana for the following reasons: (1) The Title V Permit fails to incorporate applicable PSD requirements because: LDEQ violated the PSD public participation requirements; certain stack tests show the NO_X emissions exceed PSD thresholds, yet the Title V Permit fails to include applicable PSD requirements for NO_X emissions; LDEQ failed to support its conclusion that emissions from the yield improvement project do not trigger PSD review; and LDEQ failed to apply Best Available Control Technology to NO_X emissions from the yield improvement project; (2) LDEQ failed to include emission limits for $PM_{2.5}$ emissions; and (3) the Title V Permit fails to include a case-specific Maximum Achievable Control Technology Standard for Noranda's Industrial Boilers.

On December 14, 2012, the Administrator issued an Order denying the petition. The Order explains the reasons behind EPA's conclusion to deny the petition.

Dated: January 17, 2013.

Ron Curry,

Regional Administrator, Region 6.

[FR Doc. 2013–02229 Filed 1–31–13; 8:45 am]

BILLING CODE 6560–50–P

ENVIRONMENTAL PROTECTION AGENCY

[FRL–9774–7]

Notice of Proposed Administrative Cashout Agreement Pursuant to the Comprehensive Environmental Response, Compensation, and Liability Act; In Re: The Miller Salvage Superfund Site, Latham, Pike County, OH

AGENCY: U.S. Environmental Protection Agency (EPA).

ACTION: Notice; request for public comment.

SUMMARY: Notice is hereby given of a proposed administrative settlement under CERCLA concerning the Miller Salvage Superfund Site (''Site'') in Latham, Pike County, Ohio. Subject to review and comment by the public pursuant to this Notice. The settlement resolves a United States Environmental Protection Agency claim under Sections 106, 107(a), and 122 of CERCLA, against one party who has executed binding

certifications of its consent to the settlement, as listed below in the Supplemental Information Section.

The settlement requires the settling party to pay a total of $52,000 to the EPA Hazardous Substances Superfund. The payment received shall be applied, retained, or used to finance the response actions taken or to be taken at or in connection with the Site. For thirty (30) days following the date of publication of this notice, the Agency will receive written comments relating to the settlement. The Agency will consider all comments received and may modify or withdraw its consent to the settlement if comments received disclose facts or considerations which indicate that the settlement is inappropriate, improper, or inadequate. The Agency's response to any comments received will be available for public inspection at the EPA, Region 5, 7th Floor File Room, 77 West Jackson Boulevard, Chicago, Illinois.

DATES: Comments must be submitted by March 4, 2013.

ADDRESSES: The proposed settlement is available for public inspection at the EPA, Region 5, 7th Floor File Room, 77 West Jackson Boulevard, Chicago, Illinois. In addition, a copy of the proposed settlement also may be obtained from Nola M. Hicks, Associate Regional Counsel (C–14J), Region 5, 77 West Jackson Boulevard, Chicago, Illinois 60604–3590, or by calling (312) 886–7949. Comments should reference the Miller Salvage Superfund Site, Latham, Pike County, Ohio and EPA Docket No. and should be addressed to Nola M. Hicks, Associate Regional Counsel (C–14J), Region 5, 77 West Jackson Boulevard, Chicago, Illinois 60604.

SUPPLEMENTARY INFORMATION: The parties listed below have executed binding certifications of their consent to participate in the settlement. MASCO Cabinetry Middlefield LLC, successor by way of merger to Mill's Pride, LP.

FOR FURTHER INFORMATION CONTACT: Nola M. Hicks, Associate Regional Counsel (C–14J), Region 5, 77 West Jackson Boulevard, Chicago, Illinois 60604, or call (312) 886–7949.

Authority: The Comprehensive Environmental Response, Compensation and Liability Act, of 1980, 42 U.S.C. 9604, 9606(a), 9607, and 9622, as amended.

Dated: December 20, 2012.

Richard C. Karl,

Director, Superfund Division, Region 5.

[FR Doc. 2013–02227 Filed 1–31–13; 8:45 am]

BILLING CODE 6560–50–P

ENVIRONMENTAL PROTECTION AGENCY

[FRL–9774–9]

Adequacy Status of the Dallas-Fort Worth, TX Reasonable Further Progress 8-Hour Ozone Motor Vehicle Emission Budgets for Transportation Conformity Purposes

AGENCY: Environmental Protection Agency (EPA).

ACTION: Notice of adequacy.

SUMMARY: EPA is notifying the public that it has found that the motor vehicle emissions budgets (MVEBs) in the Dallas-Fort Worth, Texas (DFW) Reasonable Further Progress (RFP) State Implementation Plan (SIP) revision, submitted on January 17, 2012 by the Texas Commission on Environmental Quality (TCEQ) are adequate for transportation conformity purposes. As a result of EPA's finding, the DFW area must use these budgets for future conformity determinations.

DATES: These budgets are effective February 19, 2013.

FOR FURTHER INFORMATION CONTACT: The essential information in this notice will be available at EPA's conformity Web site: *http://www.epa.gov/otaq/stateresources/transconf/adequacy.htm.* You may also contact Mr. Jeffrey Riley, Air Planning Section (6PD–L), U.S. Environmental Protection Agency, Region 6, 1445 Ross Avenue, Dallas, Texas 75202–2733, telephone (214) 665–8542, Email address: *Riley.Jeffrey@epa.gov.*

SUPPLEMENTARY INFORMATION: Throughout this document ''we,'' ''us,'' and ''our'' refers to EPA. The word ''budget(s)'' refers to the mobile source emissions budget for volatile organic compounds (VOCs) and the mobile source emissions budget for nitrogen oxides (NO_X).

On January 17, 2012, we received a SIP revision from the TCEQ. This revision consisted of an RFP SIP for the DFW ozone nonattainment area. This submission established MVEBs for the DFW area for the years 2011 and 2012. The MVEB is the amount of emissions allowed in the state implementation plan for on-road motor vehicles; it establishes an emissions ceiling for the regional transportation network. The MVEBs are provided in Table 1:

TABLE 1—DALLAS-FORT WORTH REASONABLE FURTHER PROGRESS NO_X AND VOC MVEBS

[Summer season tons per day]

	2011	2012
NO_X	197.05	195.39
VOC	89.54	82.20

On February 27, 2012, EPA posted the availability of the DFW area MVEBs on EPA's Web site for the purpose of soliciting public comments, as part of the adequacy process. The comment period closed on March 28, 2012, and we received no comments.

Today's notice is simply an announcement of a finding that EPA has already made. EPA Region 6 sent a letter to TCEQ on December 27, 2012, finding that the MVEBs in the DFW RFP SIP, submitted on January 17, 2012 are adequate and must be used for transportation conformity determinations in the DFW area. This finding has also been announced on EPA's conformity Web site: *http://www.epa.gov/otaq/stateresources/transconf/adequacy.htm.*

Transportation conformity is required by section 176(c) of the Clean Air Act. EPA's conformity rule, 40 Code of Federal Regulations (CFR) part 93, requires that transportation plans, programs and projects conform to state air quality implementation plans and establishes the criteria and procedures for determining whether or not they do so. Conformity to a SIP means that transportation activities will not produce new air quality violations, worsen existing violations, or delay timely attainment of the national ambient air quality standards.

The criteria by which EPA determines whether a SIP's MVEB is adequate for transportation conformity purposes are outlined in 40 CFR 93.118(e)(4). We have also described the process for determining the adequacy of submitted SIP budgets in our July 1, 2004, final rulemaking entitled, ''Transportation Conformity Rule Amendments for the New 8-hour Ozone and $PM_{2.5}$ National Ambient Air Quality Standards and Miscellaneous Revisions for Existing Areas; Transportation Conformity Rule Amendments: Response to Court Decision and Additional Rule Changes'' (69 FR 40004). Please note that an adequacy review is separate from EPA's completeness review, and it should not be used to prejudge EPA's ultimate approval of the DFW RFP SIP revision submittal. Even if EPA finds the budgets adequate, the DFW RFP SIP revision submittal could later be disapproved.

Within 24 months from the effective date of this notice, the DFW-area transportation partners, such as the North Central Texas Council of Governments, will need to demonstrate conformity to the new MVEBs if the demonstration has not already been made, pursuant to 40 CFR 93.104(e). See, 73 FR 4419 (January 24, 2008).

Authority: 42 U.S.C. 7401 *et seq.*

Dated: January 16, 2013.

Ron Curry,

Regional Administrator, Region 6.

[FR Doc. 2013–02219 Filed 1–31–13; 8:45 am]

BILLING CODE 6560–50–P

FEDERAL COMMUNICATIONS COMMISSION

Sunshine Act Meeting

January 24, 2013.

FCC To Hold Open Commission Meeting; Thursday, January 31, 2013

The Federal Communications Commission will hold an Open Meeting on the subjects listed below on Thursday, January 31, 2013. The meeting is scheduled to commence at 10:30 a.m. in Room TW–C305, at 445 12th Street SW., Washington, DC.

1 OFFICE OF ENGINEERING & TECHNOLOGY: Title: Promoting Expanded Opportunities for Radio Experimentation and Market Trials under Part 5 of the Commission's Rules and Streamlining Other Related Rules (ET Docket No. 10–236); 2006 Biennial Review of Telecommunications Regulations—Part 2 Administered by the Office of Engineering and Technology (ET Docket No. 06–155)

Summary: The Commission will consider a Report and Order to revise and streamline its rules to modernize the Experimental Radio Service by creating a more flexible environment to accelerate innovation and promote the introduction of new products, including medical devices, to the marketplace.

2 OFFICE OF ENGINEERING & TECHNOLOGY: Title: Expanding Broadband Access and Spectrum Availability for Healthcare

Summary: The Commission will hear a presentation on the agency's ongoing work to expand broadband access and spectrum availability for health care uses.

The meeting site is fully accessible to people using wheelchairs or other mobility aids. Sign language interpreters, open captioning, and assistive listening devices will be provided on site. Other reasonable accommodations for people with disabilities are available upon request. In your request, include a description of the accommodation you will need and a way we can contact you if we need more information. Last minute requests will be accepted, but may be impossible to fill. Send an email to: *fcc504@fcc.gov* or call the Consumer & Governmental Affairs Bureau at 202–418–0530 (voice), 202–418–0432 (tty).

Additional information concerning this meeting may be obtained from Meribeth McCarrick, Office of Media Relations, (202) 418–0500; TTY 1–888–835–5322. Audio/Video coverage of the meeting will be broadcast live with open captioning over the Internet from the FCC Live web page at *www.fcc.gov/live*.

For a fee this meeting can be viewed live over George Mason University's Capitol Connection. The Capitol Connection also will carry the meeting live via the Internet. To purchase these services call (703) 993–3100 or go to *www.capitolconnection.gmu.edu*.

Copies of materials adopted at this meeting can be purchased from the FCC's duplicating contractor, Best Copy and Printing, Inc. (202) 488–5300; Fax (202) 488–5563; TTY (202) 488–5562. These copies are available in paper format and alternative media, including large print/type; digital disk; and audio and video tape. Best Copy and Printing, Inc. may be reached by email at *FCC@BCPIWEB.com*.

Federal Communications Commission.

Marlene H. Dortch,

Secretary.

[FR Doc. 2013–02222 Filed 1–30–13; 11:15 am]

BILLING CODE 6712–01–P

FEDERAL RESERVE SYSTEM

Change in Bank Control Notices; Acquisitions of Shares of a Bank or Bank Holding Company

The notificants listed below have applied under the Change in Bank Control Act (12 U.S.C. 1817(j)) and § 225.41 of the Board's Regulation Y (12 CFR 225.41) to acquire shares of a bank or bank holding company. The factors that are considered in acting on the notices are set forth in paragraph 7 of the Act (12 U.S.C. 1817(j)(7)).

The notices are available for immediate inspection at the Federal Reserve Bank indicated. The notices also will be available for inspection at the offices of the Board of Governors. Interested persons may express their views in writing to the Reserve Bank indicated for that notice or to the offices of the Board of Governors. Comments must be received not later than February 15, 2013.

A. Federal Reserve Bank of Chicago (Colette A. Fried, Assistant Vice President) 230 South LaSalle Street, Chicago, Illinois 60690–1414:

1. *Kevin J. Hendricks and Kendra Hendricks,* both of Janesville, Wisconsin; as part of a family group including Diane M. Hendricks; to retain voting shares of Blackhawk Bancorp, Inc., and thereby indirectly retain voting shares of Blackhawk Bank, both in Beloit, Wisconsin.

B. Federal Reserve Bank of San Francisco (Kenneth Binning, Vice President, Applications and Enforcement) 101 Market Street, San Francisco, California 94105–1579:

1. *The Thian Control Group, which includes Yee Phong Thian; Fen Fen Thian; Min Yaw Thian; Min Tat Thian; and Gim Tie Kheng, all of Arcadia, California; Fui Ming Thian, Lawrence S K Law, and Jor Leong Law all of Calabasas, California; Yee Chin Thian of Glendale, California; Jennifer Wei Lim Kheng of San Francisco, California; Jor Teck Law of Beijing, China; Min Yang Thian of Kuala Lumpur, Malaysia; Min Jie Thian of New York, New York; United Overseas Investment, Inc. and Eastern Union, Inc., both in Sherman Oaks, California; the Kao Control Group, which includes Ruey Chyr Kao, Je Tsu Kao, and James Kao, all of Las Vegas, Nevada; Min Hwan Kao and Yu Fan Kao, both of Leawood, Kansas; Daniel J. Kao and Linda Lee Kao, both of La Jolla, California; Christina Kao, Piscataway, New Jersey; the Chang Control Group, which includes Louis C. Chang and Su-Cheng C. Chang, both of Palos Verdes Estates, California; and Peter Ming Chang, Los Alamitos, California;* to retain voting shares of RBB Bancorp, and thereby indirectly retain voting shares of Royal Business Bank, both in Los Angeles, California.

Board of Governors of the Federal Reserve System, January 28, 2013.

Margaret McCloskey Shanks,

Deputy Secretary of the Board.

[FR Doc. 2013–02111 Filed 1–31–13; 8:45 am]

BILLING CODE 6210–01–P

FEDERAL RESERVE SYSTEM

Formations of, Acquisitions by, and Mergers of Bank Holding Companies

The companies listed in this notice have applied to the Board for approval, pursuant to the Bank Holding Company Act of 1956 (12 U.S.C. 1841 *et seq.*) (BHC Act), Regulation Y (12 CFR part 225), and all other applicable statutes and regulations to become a bank

holding company and/or to acquire the assets or the ownership of, control of, or the power to vote shares of a bank or bank holding company and all of the banks and nonbanking companies owned by the bank holding company, including the companies listed below.

The applications listed below, as well as other related filings required by the Board, are available for immediate inspection at the Federal Reserve Bank indicated. The applications will also be available for inspection at the offices of the Board of Governors. Interested persons may express their views in writing on the standards enumerated in the BHC Act (12 U.S.C. 1842(c)). If the proposal also involves the acquisition of a nonbanking company, the review also includes whether the acquisition of the nonbanking company complies with the standards in section 4 of the BHC Act (12 U.S.C. 1843). Unless otherwise noted, nonbanking activities will be conducted throughout the United States.

Unless otherwise noted, comments regarding each of these applications must be received at the Reserve Bank indicated or the offices of the Board of Governors not later than February 25, 2013.

A. Federal Reserve Bank of Boston (Richard Walker, Community Affairs Officer) 600 Atlantic Avenue, Boston, Massachusetts 02210–2204:

1. *Wakefield Bancorp, MHC, and Wakefield Bancorp, Inc.,* both in Wakefield, Massachusetts; to become bank holding companies by acquiring 100 percent of the voting shares of The Savings Bank, Wakefield, Massachusetts.

Board of Governors of the Federal Reserve System, January 28, 3013.

Margaret McCloskey Shanks,

Deputy Secretary of the Board.

[FR Doc. 2013–02112 Filed 1–31–13; 8:45 am]

BILLING CODE 6210–01–P

FEDERAL TRADE COMMISSION

[File No. 112 3120]

Cbr Systems, Inc.; Analysis of Proposed Consent Order To Aid Public Comment

AGENCY: Federal Trade Commission.

ACTION: Proposed Consent Agreement.

SUMMARY: The consent agreement in this matter settles alleged violations of federal law prohibiting unfair or deceptive acts or practices or unfair methods of competition. The attached Analysis to Aid Public Comment describes both the allegations in the draft complaint and the terms of the consent order—embodied in the consent agreement—that would settle these allegations.

DATES: Comments must be received on or before February 28, 2013.

ADDRESSES: Interested parties may file a comment at *https://ftcpublic.commentworks.com/ftc/cbrsystemsconsent* online or on paper, by following the instructions in the Request for Comment part of the **SUPPLEMENTARY INFORMATION** section below. Write ''Cbr Systems, File No. 112 3120'' on your comment and file your comment online at *https://ftcpublic.commentworks.com/ftc/cbrsystemsconsent* by following the instructions on the web-based form. If you prefer to file your comment on paper, mail or deliver your comment to the following address: Federal Trade Commission, Office of the Secretary, Room H–113 (Annex D), 600 Pennsylvania Avenue NW., Washington, DC 20580.

FOR FURTHER INFORMATION CONTACT: Laura Roposo VanDruff (202–326–2999), Ryan M. Mehm (202–326–2918), FTC, Bureau of Consumer Protection, 600 Pennsylvania Avenue NW., Washington, DC 20580.

SUPPLEMENTARY INFORMATION: Pursuant to Section 6(f) of the Federal Trade Commission Act, 15 U.S.C. 46(f), and FTC Rule 2.34, 16 CFR 2.34, notice is hereby given that the above-captioned consent agreement containing a consent order to cease and desist, having been filed with and accepted, subject to final approval, by the Commission, has been placed on the public record for a period of thirty (30) days. The following Analysis to Aid Public Comment describes the terms of the consent agreement, and the allegations in the complaint. An electronic copy of the full text of the consent agreement package can be obtained from the FTC Home Page (for January 28, 2013), on the World Wide Web, at *http://www.ftc.gov/os/actions.shtm.* A paper copy can be obtained from the FTC Public Reference Room, Room 130–H, 600 Pennsylvania Avenue NW., Washington, DC 20580, either in person or by calling (202) 326–2222.

You can file a comment online or on paper. For the Commission to consider your comment, we must receive it on or before February 28, 2013. Write ''Cbr Systems, File No. 112 3120'' on your comment. Your comment—including your name and your state—will be placed on the public record of this proceeding, including, to the extent practicable, on the public Commission Web site, at *http://www.ftc.gov/os/publiccomments.shtm.* As a matter of discretion, the Commission tries to remove individuals' home contact information from comments before placing them on the Commission Web site.

Because your comment will be made public, you are solely responsible for making sure that your comment does not include any sensitive personal information, like anyone's Social Security number, date of birth, driver's license number or other state identification number or foreign country equivalent, passport number, financial account number, or credit or debit card number. You are also solely responsible for making sure that your comment does not include any sensitive health information, like medical records or other individually identifiable health information. In addition, do not include any ''[t]rade secret or any commercial or financial information which * * * is privileged or confidential,'' as discussed in Section 6(f) of the FTC Act, 15 U.S.C. 46(f), and FTC Rule 4.10(a)(2), 16 CFR 4.10(a)(2). In particular, do not include competitively sensitive information such as costs, sales statistics, inventories, formulas, patterns, devices, manufacturing processes, or customer names.

If you want the Commission to give your comment confidential treatment, you must file it in paper form, with a request for confidential treatment, and you have to follow the procedure explained in FTC Rule 4.9(c), 16 CFR 4.9(c).[1] Your comment will be kept confidential only if the FTC General Counsel, in his or her sole discretion, grants your request in accordance with the law and the public interest.

Postal mail addressed to the Commission is subject to delay due to heightened security screening. As a result, we encourage you to submit your comments online. To make sure that the Commission considers your online comment, you must file it at *https://ftcpublic.commentworks.com/ftc/cbrsystemsconsent* by following the instructions on the web-based form. If this Notice appears at *http://www.regulations.gov/#!home,* you also may file a comment through that Web site.

If you file your comment on paper, write ''Cbr Systems, File No. 112 3120'' on your comment and on the envelope, and mail or deliver it to the following address: Federal Trade Commission, Office of the Secretary, Room H–113

[1] In particular, the written request for confidential treatment that accompanies the comment must include the factual and legal basis for the request, and must identify the specific portions of the comment to be withheld from the public record. *See* FTC Rule 4.9(c), 16 CFR 4.9(c).

(Annex D), 600 Pennsylvania Avenue NW., Washington, DC 20580. If possible, submit your paper comment to the Commission by courier or overnight service.

Visit the Commission Web site at *http://www.ftc.gov* to read this Notice and the news release describing it. The FTC Act and other laws that the Commission administers permit the collection of public comments to consider and use in this proceeding as appropriate. The Commission will consider all timely and responsive public comments that it receives on or before February 28, 2013. You can find more information, including routine uses permitted by the Privacy Act, in the Commission's privacy policy, at *http://www.ftc.gov/ftc/privacy.htm*.

Analysis of Agreement Containing Consent Order To Aid Public Comment

The Federal Trade Commission has accepted, subject to final approval, a consent order applicable to Cbr Systems, Inc.

The proposed consent order has been placed on the public record for thirty (30) days for receipt of comments by interested persons. Comments received during this period will become part of the public record. After thirty (30) days, the Commission will again review the agreement and the comments received, and will decide whether it should withdraw from the agreement and take appropriate action or make final the agreement's proposed order.

Cbr collects and stores umbilical cord blood and umbilical cord tissue for potential medical use. When a pregnant woman agrees to have Cbr collect and store her umbilical cord blood or umbilical cord blood and umbilical cord tissue, Cbr collects her personal information, including, but not limited to, the following: name, address, email address, telephone number, date of birth, Social Security number, driver's license number, credit card number, debit card number, medical health history profile, blood typing results, and infectious disease marker results. During the enrollment process, Cbr also collects personal information, such as fathers' Social Security numbers, and the company collects information relating to newborn children, such as name, gender, date and time of birth, birth weight, delivery type, and adoption type (i.e., open, closed, or surrogate). Cbr may also collect limited health information for certain children and the name, address, email address, and credit card information for individuals, such as friends or family members, who contribute to the cost of collecting and storing cord blood or cord tissue. The misuse of the types of personal information Cbr collects—including Social Security numbers, dates of birth, credit card numbers, and health information—can facilitate identity theft, including existing and new account fraud, expose sensitive medical data, and lead to related consumer harms.

The Commission's complaint alleges that Cbr misrepresented that it maintained reasonable and appropriate practices to protect consumers' personal information from unauthorized access. Cbr engaged in a number of practices, however, that, taken together, failed to provide reasonable and appropriate security for consumers' personal information. Among other things, Cbr:

(1) Failed to implement reasonable policies and procedures to protect the security of consumers' personal information it collected and maintained;

(2) Created unnecessary risks to personal information by (a) Transporting portable media containing personal information in a manner that made the media vulnerable to theft or other misappropriation; (b) failing to adequately supervise a service provider, resulting in the retention of a legacy database that contained consumers' personal information, including consumers' names, addresses, email addresses, telephone numbers, dates of birth, Social Security numbers, drivers' license numbers, credit card numbers, and health information, in a vulnerable format on its network; (c) failing to take reasonable steps to render backup tapes or other portable media containing personal information or information that could be used to access personal information unusable, unreadable, or indecipherable in the event of unauthorized access; (d) not adequately restricting access to or copying of personal information contained in its databases based on an employee's need for information; and (e) failing to destroy consumers' personal information for which Cbr no longer had a business need; and

(3) Failed to employ sufficient measures to prevent, detect, and investigate unauthorized access to computer networks, such as by adequately monitoring web traffic, confirming distribution of anti-virus software, employing an automated intrusion detection system, retaining certain system logs, or systematically reviewing system logs for security threats.

The complaint further alleges that these failures contributed to a December 2010 incident in which hundreds of thousands of consumers' personal information was unnecessarily exposed. On December 9, 2010, a Cbr employee removed four backup tapes from Cbr's San Francisco, California facility and placed them in a backpack to transport them to Cbr's corporate headquarters in San Bruno, California, approximately thirteen miles away. The backpack contained the four Cbr backup tapes, a Cbr laptop, a Cbr external hard drive, a Cbr USB drive, and other materials. At approximately 11:35 p.m. on December 13, 2010, an intruder removed the backpack from the Cbr employee's personal vehicle. The Cbr backup tapes were unencrypted, and they contained consumers' personal information, including, in some cases, names, gender, Social Security numbers, dates and times of birth, drivers' license numbers, credit/debit card numbers, card expiration dates, checking account numbers, addresses, email addresses, telephone numbers, and adoption type (i.e., open, closed, or surrogate) for approximately 298,000 consumers. The Cbr laptop and Cbr external hard drive, both of which were unencrypted, contained enterprise network information, including passwords and protocols, that could have facilitated an intruder's access to Cbr's network, including additional personal information contained on the Cbr network.

The proposed order contains provisions designed to prevent Cbr from engaging in the future in practices similar to those alleged in the complaint.

Part I of the proposed order prohibits misrepresentations about the privacy, confidentiality, security, or integrity of personal information collected from or about consumers. Part II of the proposed order requires Cbr to establish and maintain a comprehensive information security program that is reasonably designed to protect the security, confidentiality, and integrity of personal information collected from or about consumers. The security program must contain administrative, technical, and physical safeguards appropriate to Cbr's size and complexity, nature and scope of its activities, and the sensitivity of the information collected from or about consumers. Specifically, the proposed order requires Cbr to:

- Designate an employee or employees to coordinate and be accountable for the information security program;
- Identify material internal and external risks to the security, confidentiality, and integrity of personal information that could result in the unauthorized disclosure, misuse, loss, alteration, destruction, or other compromise of such information, and

assess the sufficiency of any safeguards in place to control these risks;

• Design and implement reasonable safeguards to control the risks identified through risk assessment, and regularly test or monitor the effectiveness of the safeguards' key controls, systems, and procedures;

• Develop and use reasonable steps to select and retain service providers capable of appropriately safeguarding personal information they receive from Cbr, and require service providers by contract to implement and maintain appropriate safeguards; and

• Evaluate and adjust its information security program in light of the results of testing and monitoring, any material changes to operations or business arrangement, or any other circumstances that it knows or has reason to know may have a material impact on its information security program.

Part III of the proposed order requires Cbr to obtain within the first one hundred eighty (180) days after service of the order, and on a biennial basis thereafter for a period of twenty (20) years, an assessment and report from a qualified, objective, independent third-party professional, certifying, among other things, that: (1) It has in place a security program that provides protections that meet or exceed the protections required by Part II of the proposed order; and (2) its security program is operating with sufficient effectiveness to provide reasonable assurance that the security, confidentiality, and integrity of sensitive consumer, employee, and job applicant information has been protected.

Parts IV through VIII of the proposed order are reporting and compliance provisions. Part IV requires Cbr to retain documents relating to its compliance with the order. For most records, the order requires that the documents be retained for a five-year period. For the third-party assessments and supporting documents, Cbr must retain the documents for a period of three years after the date that each assessment is prepared. Part V requires dissemination of the order now and in the future to all current and future principals, officers, directors, and managers, and to persons with responsibilities relating to the subject matter of the order. Part VI ensures notification to the FTC of changes in corporate status. Part VII mandates that Cbr submit a compliance report to the FTC within 60 days, and periodically thereafter as requested. Part VIII is a provision ''sunsetting'' the order after twenty (20) years, with certain exceptions.

The purpose of this analysis is to facilitate public comment on the proposed order. It is not intended to constitute an official interpretation of the proposed complaint or order or to modify the order's terms in any way.

By direction of the Commission.

Donald S. Clark,

Secretary.

[FR Doc. 2013–02143 Filed 1–31–13; 8:45 am]

BILLING CODE 6750–01–P

DEPARTMENT OF HEALTH AND HUMAN SERVICES

Centers for Medicare & Medicaid Services

[Document Identifiers CMS–10409 and CMS–10461]

Agency Information Collection Activities: Proposed Collection; Comment Request

AGENCY: Centers for Medicare & Medicaid Services, HHS.

In compliance with the requirement of section 3506(c)(2)(A) of the Paperwork Reduction Act of 1995, the Centers for Medicare & Medicaid Services (CMS) is publishing the following summary of proposed collections for public comment. Interested persons are invited to send comments regarding this burden estimate or any other aspect of this collection of information, including any of the following subjects: (1) The necessity and utility of the proposed information collection for the proper performance of the agency's functions; (2) the accuracy of the estimated burden; (3) ways to enhance the quality, utility, and clarity of the information to be collected; and (4) the use of automated collection techniques or other forms of information technology to minimize the information collection burden.

1. *Type of Information Collection Request:* Revision of a currently approved collection; *Title of Information Collection:* Long Term Care Hospital (LCTH) Continuity Assessment Record and Evaluation (CARE) Data Set; *Use:* Section 3004 of the Affordable Care Act authorizes the establishment of a new quality reporting program for LTCH. LTCHs that fail to submit quality measure data may be subject to a 2 percentage point reduction in their annual update to the standard Federal rate for discharges occurring during a rate year. In the FY 2013 IPPS/LTCH PPS final rule (76 FR 51743 through 51756), CMS retained three measures (NQF #0678, NQF #0138 and NQF #0139) and adopted two new measure (NQF #0680 and NQF#0431) for the FY 2016 payment determination. NQF #0680 is the percent of residents or patients who were assessed and appropriately given the seasonal influenza vaccine (short-stay). NQF #0431 is influenza vaccination coverage among healthcare personnel. The data collection for these two NQF endorsed measures will start January 1, 2014.

LTCH CARE Data Set was developed specifically for use in LTCHs for data collection of NQF #0678 Pressure Ulcer measures beginning October 1, 2012, with the understanding that the data set would expand in future rulemaking years with the adoption of additional quality measures. Relevant data elements contained in other well-known and clinically established data sets, including but not limited to the Minimum Data Set 3.0 (MDS 3.0) and CARE, were incorporated into the LTCH CARE Data Set V1.01. *Form Number:* CMS–10409 (OCN: 0938–1163); *Frequency:* Occasionally; *Affected Public:* Private Sector: Business or other for-profit and not-for-profit institutions; *Number of Respondents:* 442; *Total Annual Responses:* 403,988; *Total Annual Hours:* 212,160. (For policy questions regarding this collection contact Charles Padgett at 410–786–2811. For all other issues call 410–786–1326.)

2. *Type of Information Collection Request:* New collection (request for a new OMB control number). *Title of Information Collection:* Emergency Department Patient Experience of Care Survey. *Use:* This survey supports the six national priorities for improving care from the National Quality Strategy developed by the U.S. Department of Health and Human Services (HHS) that was called for under the Affordable Care Act to create national aims and priorities to guide local, state, and national efforts to improve the quality of health care. This strategy has established six priorities that support a three-part aim focusing on better care, better health, and lower costs through improvement. The six priorities include: making care safer by reducing harm caused by the delivery of care; ensuring that each person and family are engaged as partners in their care; promoting effective communication and coordination of care; promoting the most effective prevention and treatment practices for the leading causes of mortality, starting with cardiovascular disease; working with communities to promote wide use of best practices to enable healthy living; and making quality care more affordable for individuals, families, employers, and

governments by developing and spreading new health care delivery models. This survey will provide patient experiences with care data that enables making comparisons of emergency departments across the nation and promoting effective communication and coordination. *Form Number:* CMS–10461 (OCN 0938-New). *Frequency:* Once. *Affected Public:* Individuals and households. *Number of Respondents: Total Annual Responses:* 3,360. *Total Annual Hours:* 799. (For policy questions regarding this collection contact Sai Ma at 410–786–1479. For all other issues call 410–786–1326.)

To obtain copies of the supporting statement and any related forms for the proposed paperwork collections referenced above, access CMS' Web Site address at *http://www.cms.hhs.gov/PaperworkReductionActof1995,* or Email your request, including your address, phone number, OMB number, and CMS document identifier, to *Paperwork@cms.hhs.gov,* or call the Reports Clearance Office on (410) 786–1326.

In commenting on the proposed information collections please reference the document identifier or OMB control number. To be assured consideration, comments and recommendations must be submitted in one of the following ways by April 2, 2013:

1. *Electronically.* You may submit your comments electronically to *http://www.regulations.gov.* Follow the instructions for ''Comment or Submission'' or ''More Search Options'' to find the information collection document(s) accepting comments.

2. *By regular mail.* You may mail written comments to the following address: CMS, Office of Strategic Operations and Regulatory Affairs, Division of Regulations Development, Attention: Document Identifier/OMB Control Number _____, Room C4–26–05, 7500 Security Boulevard, Baltimore, Maryland 21244–1850.

Dated: January 29, 2013.

Martique Jones,

Deputy Director, Regulations Development Group, Office of Strategic Operations and Regulatory Affairs.

[FR Doc. 2013–02155 Filed 1–31–13; 8:45 am]

BILLING CODE 4120–01–P

DEPARTMENT OF HEALTH AND HUMAN SERVICES

Centers for Medicare & Medicaid Services

[CMS–1602–N]

Medicare Program: Notice of Two Membership Appointments to the Advisory Panel on Hospital Outpatient Payment

AGENCY: Centers for Medicare & Medicaid Services (CMS), Department of Health and Human Services (HHS).

ACTION: Notice.

SUMMARY: This notice announces two new membership appointments to the Advisory Panel on Hospital Outpatient Payment (HOP, the Panel). The two new appointments to the Panel will each serve a 4-year period. The new members will have terms that begin on February 1, 2013 and continue through January 31, 2017. The purpose of the Panel is to advise the Secretary of the Department of Health and Human Services and the Administrator of the Centers for Medicare & Medicaid Services concerning the clinical integrity of the Ambulatory Payment Classification groups and their relative payment weights. The Panel also addresses and makes recommendations regarding supervision of outpatient services. The advice provided by the Panel will be considered as we prepare the annual updates for the hospital outpatient prospective payment system.

FOR FURTHER INFORMATION CONTACT: For additional information on the Panel meeting dates, agenda topics, copy of the charter, as well as updates to the Panel's activities, search our Internet Web site: *https://www.cms.gov/Regulations-and Guidance/Guidance/FACA/AdvisoryPanelon AmbulatoryPayment ClassificationGroups.html* For other information regarding the Panel, contact Chuck Braver, the Designated Federal Officer at CMS, Center for Medicare, Hospital and Ambulatory Policy Group, Division of Outpatient Care, 7500 Security Boulevard, Mail Stop C4–05–17, Baltimore, MD 21244–1850, phone (410) 786–3985.

SUPPLEMENTARY INFORMATION:

I. Background

The Department of Health and Human Services (the Secretary) is required by section 1833(t)(9)(A) of the Social Security Act (the Act) (42 U.S.C. 1395l(t)(9)(A)) and section 222 of the Public Health Service Act (PHS Act) (42 U.S.C. 217a) to consult with an expert outside advisory panel on the clinical integrity of the Ambulatory Payment Classification groups and weights. The Advisory Panel on Hospital Outpatient Payment (HOP, the Panel) is governed by the provisions of the Federal Advisory Committee Act (FACA) (Pub. L. 92–463), as amended (5 U.S.C. Appendix 2), which sets forth standards for the formation and use of advisory panels. The Panel Charter provides that the Panel shall meet up to 3 times annually. We consider the technical advice provided by the Panel as we prepare the proposed and final rules to update the outpatient prospective payment system for the following calendar year.

The Panel shall consist of a Chair and up to 19 members who are full-time employees of hospitals, hospital systems, or other Medicare providers. The Secretary or a designee selects the Panel membership based upon either self-nominations or nominations submitted by Medicare providers and other interested organizations. New appointments are made in a manner that ensures a balanced membership under the FACA guidelines.

The Panel presently consists of the following members and a Chair.

- Edith Hambrick, M.D., J.D., Chair, CMS Medical Officer.
- Karen Borman, M.D., FACS.
- Ruth L. Bush, M.D., M.P.H.
- Lanny Copeland, M.D., AAFP.
- Kari S. Cornicelli, C.P.A., FHFMA.
- Dawn L. Francis, M.D., M.H.S.
- David A. Halsey, M.D.
- Brian D. Kavanagh, M.D., MPH.
- Scott Manaker, M.D., Ph.D.
- John Marshall, CRA, RCC, CIRCC, RT(R), FAHRA.
- Jim Nelson, M.B.A., C.P.A., FHFMA.
- Leah Osbahr, M.A., MPH.
- Jacqueline Phillips.
- Daniel J. Pothen, M.S., RHIA, CHPS.
- Gregory Przybylski, M.D.
- Traci Rabine.
- Marianna V. Spanaki-Varela, MD, Ph.D., M.B.A.
- Gale Walker.

II. Provisions of the Notice

We published a notice in the **Federal Register** on August 24, 2012, entitled '' Medicare Program; Solicitation of Two Nominations to the Advisory Panel on Hospital Outpatient Payment'' (77 FR 51542). The notice solicited nominations for two new members to the Advisory Panel on Hospital Outpatient Payment (HOP, the Panel) to fill two vacancies on the panel beginning September 30, 2012. As a result of that notice, we are announcing two new members to the Panel. Their appointments are for 4-year terms beginning on February 1, 2013.

New Appointments to the Panel—The new members of the Panel with terms beginning on February 1, 2013 and continuing through January 31, 2017 are as follows:

- Michael Rabovsky, M.D.
- Kris Zimmer.

III. Collection of Information Requirements

This document does not impose information collection and recordkeeping requirements. Consequently, it need not be reviewed by the Office of Management and Budget under the authority of the Paperwork Reduction Act of 1995 (44 U.S.C. 35).

(Catalog of Federal Domestic Assistance Program; No. 93.773 Medicare—Hospital Insurance Program; and No. 93.774, Medicare—Supplementary Medical Insurance Program) Section 1833(t)(9)(A) of the Act (42 U.S.C. 1395l(t)(9)(A)). The Panel is governed by the provisions of the Federal Advisory Committee Act, as amended (5 U.S.C. Appendix 2).

Dated: January 25, 2013.

Marilyn Tavenner,

Acting Administrator, Centers for Medicare & Medicaid Services.

[FR Doc. 2013–02193 Filed 1–31–13; 8:45 am]

BILLING CODE 4120–01–P

DEPARTMENT OF HEALTH AND HUMAN SERVICES

Administration for Children and Families

Submission for OMB Review; Comment Request

Title: Child Care and Development Fund Financial Report (ACF 696) for States and Territories.

OMB No.: 0970–0163.

Description: States and Territories use the Financial Report Form ACF–696 to report Child Care and Development Fund (CCDF) expenditures. Authority to collect and report this information is found in section 658G of the Child Care and Development Block Grant Act of 1990, as revised. In addition to the Program Reporting Requirements set forth in 45 CFR part 98, subpart H, the regulations at 45 CFR 98.65(g) and 98.67(c)(1) authorize the Secretary to require financial reports as necessary.

The form provides specific data regarding claims and provides a mechanism for States to request Child Care grant awards and to certify the availability of State matching funds. Failure to collect this data would seriously compromise ACF's ability to monitor Child Care and Development Fund expenditures. This information is also used to estimate outlays and may be used to prepare ACF budget submissions to Congress.

The previous information collection requirements related to the American Recovery and Reinvestment Act (ARRA) of 2009, (Pub. L. 111–5) have been deleted from this reporting form.

Respondents: States and Territories.

ANNUAL BURDEN ESTIMATES

Instrument	Number of respondents	Number of responses per respondent	Average burden hours per response	Total burden hours
ACF–696	56	4	4	896

Estimated Total Annual Burden Hours: 896.

Additional Information

Copies of the proposed collection may be obtained by writing to the Administration for Children and Families, Office of Planning, Research and Evaluation, 370 L'Enfant Promenade SW., Washington, DC 20447, Attn: ACF Reports Clearance Officer. All requests should be identified by the title of the information collection. Email address: *infocollection@acf.hhs.gov.*

OMB Comment

OMB is required to make a decision concerning the collection of information between 30 and 60 days after publication of this document in the **Federal Register**. Therefore, a comment is best assured of having its full effect if OMB receives it within 30 days of publication. Written comments and recommendations for the proposed information collection should be sent directly to the following: Office of Management and Budget, Paperwork Reduction Project, Fax: 202–395–7285, Email: *OIRA_SUBMISSION@OMB.EOP.GOV*, Attn: Desk Officer for the Administration for Children and Families.

Robert Sargis,

Reports Clearance Officer.

[FR Doc. 2013–02137 Filed 1–31–13; 8:45 am]

BILLING CODE 4184–01–P

DEPARTMENT OF HEALTH AND HUMAN SERVICES

Administration for Children and Families

Submission for OMB Review; Comment Request

Title: Head Start Program Performance Standards—Final rule.

OMB No.: 0970–0148.

Description: Head Start Program Performance Standards require Head Start and Early Head Start Programs and Delegate Agencies to maintain program records. The Administration for Children and Families, Office of Head Start, is proposing to renew, without changes, the authority to require certain record keeping in all programs as provided for in 45 CFR part 1304 Head Start Program Performance Standards. These standards prescribe the services that Head Start and Early Head Start programs provide to enrolled children and their families.

Respondents: Head Start and Early Head Start grantees and delegate agencies.

ANNUAL BURDEN ESTIMATES

Instrument	Number of respondents	Number of responses per respondent	Average burden hours per response	Total burden hours
Standard	2,590	16	41.80	1,732,192

Estimated Total Annual Burden Hours: 1,732,192.

Additional Information: Copies of the proposed collection may be obtained by writing to the Administration for Children and Families, Office of Planning, Research and Evaluation, 370 L'Enfant Promenade SW., Washington, DC 20447, Attn: ACF Reports Clearance Officer. All requests should be identified by the title of the information collection. Email address: *infocollection@acf.hhs.gov.*

OMB Comment: OMB is required to make a decision concerning the collection of information between 30 and 60 days after publication of this document in the **Federal Register**. Therefore, a comment is best assured of having its full effect if OMB receives it within 30 days of publication. Written comments and recommendations for the proposed information collection should be sent directly to the following: Office of Management and Budget, Paperwork Reduction Project, Fax: 202–395–7285, Email: *OIRA_SUBMISSION@OMB.EOP.GOV*, Attn: Desk Officer for the Administration for Children and Families.

Robert Sargis,

Reports Clearance Officer.

[FR Doc. 2013–02115 Filed 1–31–13; 8:45 am]

BILLING CODE 4184–01–P

DEPARTMENT OF HEALTH AND HUMAN SERVICES

Health Resources and Services Administration

Statement of Organization, Functions and Delegations of Authority

This notice amends Part R of the Statement of Organization, Functions and Delegations of Authority of the Department of Health and Human Services (HHS), Health Resources and Services Administration (HRSA) (60 FR 56605, as amended November 6, 1995; 67 FR 46519, as last amended Wednesday, September 30, 2009; 74 FR 50227). This Order of Succession supersedes the Order of Succession for the Administrator, HRSA, published at 74 FR 50227, September 30, 2009.

This notice deletes the Senior Advisor to the Administrator from HRSA's hierarchy affecting the order of succession. This notice reflects the new Order of Succession for HRSA.

Section R–30, Order of Succession

During the absence or disability of the Administrator, or in the event of a vacancy in the office, the officials designated below shall act as Administrator in the order in which they are listed:

1. Deputy Administrator;
2. Chief Operating Officer;
3. Associate Administrator, Bureau of Primary Health Care;
4. Associate Administrator, Bureau of Health Professions;
5. Associate Administrator, HIV/AIDS Bureau;
6. Associate Administrator, Maternal and Child Health Bureau;
7. Associate Administrator, Bureau of Clinician Recruitment and Service;
8. Associate Administrator, Healthcare Systems Bureau;
9. Associate Administrator, Office of Regional Operations; and
10. HRSA Regional Division Directors in the order in which they have received their permanent appointment as such.

Exceptions

(a) No official listed in this section who is serving in acting or temporary capacity shall, by virtue of so serving, act as Administrator pursuant to this section.

(b) Notwithstanding the provisions of this section, during a planned period of absence, the Administrator retains the discretion to specify a different order of succession.

Section R–40, Delegations of Authority

All delegations of authority and re-delegations of authority made to HRSA officials that were in effect immediately prior to this action, and that are consistent with this action, shall continue in effect pending further re-delegation, provided they are consistent with this action.

This document is effective upon date of signature.

Dated: January 24, 2013.

Mary K. Wakefield,

Administrator.

[FR Doc. 2013–02124 Filed 1–31–13; 8:45 am]

BILLING CODE 4165–15–P

DEPARTMENT OF HEALTH AND HUMAN SERVICES

Indian Health Service

Request for Public Comment: 30-Day Proposed Information Collection: Indian Health Service Contract Health Services Report

AGENCY: Indian Health Service, HHS.

ACTION: Notice.

SUMMARY: In compliance with Section 3507(a)(1)(D) of the Paperwork Reduction Act of 1995 which requires 30 days for public comment on proposed information collection projects, the Indian Health Service (IHS) is publishing for comment a summary of a proposed information collection to be submitted to the Office of Management and Budget (OMB) for review. This proposed information collection project was previously published in the **Federal Register** (77 FR 69865) on November 21, 2012, and allowed 60 days for public comment, as required by 3506(c)(2)(A). No public comment was received in response to the notice. The purpose of this notice is to allow 30 days for public comment to be submitted directly to OMB.

Proposed Collection: Title: 0917–0002, ''IHS Contract Health Service Report.'' *Type of Information Collection Request:* Extension, without change, of a currently approved information collection, 0917–0002, ''IHS Contract Health Service Report.'' While there were minor text changes (i.e., updating of statute/regulatory citations), there were no significant changes to the form. *Form:* IHS 843–1A. ''Order for Health Services.'' *Need and Use of Information Collection:* The IHS Contract Health Service (CHS) Program, located in the Office of Resource Access and Partnerships, needs this information to certify that the health care services requested and authorized by the IHS have been performed by the CHS provider(s) to have providers validate services provided; to process payments

for health care services performed by such providers; and to serve as a legal document for health and medical care authorized by IHS and rendered by health care providers under contract with the IHS. *Affected Public:* Patients, health and medical care providers or Tribal Governments. *Type of Respondents:* Health and medical care providers.

Burden Hours: The table below provides: Types of data collection instruments, Estimated number of respondents, Number of responses per respondent, Average burden hour per response, and Total annual burden hours.

Data collection instrument(s)	Estimated number of respondents	Responses per respondent	Average burden hour per response*	Total annual burden hours
IHS 843–1A	7,977	52	3/60	20,740
Total				20,740

* For ease of understanding, burden hours are also provided in actual minutes.

The total estimated burden for this collection is 20,740 hours.

There are no Capital Costs, Operating Costs, and/or Maintenance Costs to report.

Request for Comments: Your written comments and/or suggestions are invited on one or more of the following points: (a) Whether the information collection activity is necessary to carry out an agency function; (b) whether the IHS processes the information collected in a useful and timely fashion; (c) the accuracy of the public burden estimate (this is the amount of time needed for individual respondents to provide the requested information); (d) whether the methodology and assumptions used to determine the estimate are logical; (e) ways to enhance the quality, utility, and clarity of the information being collected; and (f) ways to minimize the public burden through the use of automated, electronic, mechanical, or other technological collection techniques or other forms of information technology.

Direct your comments to OMB: Send your comments and suggestions regarding the proposed information collection contained in this notice, especially regarding the estimated public burden and associated response time to: Office of Management and Budget, Office of Regulatory Affairs, New Executive Office Building, Room 10235, Washington, DC 20503, Attention: Desk Officer for IHS.

To request more information on the proposed collection, or to obtain a copy of the data collection instruments and/or instruction(s) contact: Tamara Clay, Reports Clearance Officer, 801 Thompson Avenue, TMP, Suite 450, Rockville, MD 20852, call non-toll free (301) 443–4750, send via facsimile to (301) 443–2316, or send your email requests, comments, and return address to: *Tamara.Clay@ihs.gov.*

DATES: *Comment Due Date:* March 4, 2013. Your comments regarding this information collection are best assured of having full effect if received within 30 days of the date of this publication.

Dated: January 23, 2013.

Yvette Roubideaux,

Director, Indian Health Service.

[FR Doc. 2013–02140 Filed 1–31–13; 8:45 am]

BILLING CODE 4165–16–P

DEPARTMENT OF HEALTH AND HUMAN SERVICES

National Institutes of Health

Proposed Collection; Comment Request (60-Day FRN); The Clinical Trials Reporting Program (CTRP) Database (NCI)

SUMMARY: In compliance with the requirement of Section 3506(c)(2)(A) of the Paperwork Reduction Act of 1995, for opportunity for public comment on proposed data collection projects, the National Institutes of Health (NIH) will publish periodic summaries of proposed projects to be submitted to the Office of Management and Budget (OMB) for review and approval.

Written comments and/or suggestions from the public and affected agencies are invited to address one or more of the following points: (1) Whether the proposed collection of information is necessary for the proper performance of the function of the agency, including whether the information will have practical utility; (2) The accuracy of the agency's estimate of the burden of the proposed collection of information, including the validity of the methodology and assumptions used; (3) The quality, utility, and clarity of the information to be collected; and (4) Minimize the burden of the collection of information on those who are to respond, including the use of appropriate automated, electronic, mechanical, or other technological collection techniques or other forms of information technology. To submit comments in writing, request more information on the proposed project, or to obtain a copy of the data collection plans and instruments, contact: Jose Galvez, Office of the Director, National Cancer Institute, 2115 East Jefferson Street, Rockville, MD 20852 or call non-toll-free number 301–443–6141 or Email your request, including your address to: *jose.galvez@nih.gov.*

Comments regarding this information collection are best assured of having their full effect if received within 60 days of the date of this publication.

Proposed Collection: The Clinical Trials Reporting Program (CTRP) Database, 0925–0600, Expiration Date 3/31/2013—EXTENSION, National Cancer Institute (NCI), National Institutes of Health (NIH).

Need and Use of Information Collection: The Clinical Trials Reporting Program (CTRP) is an electronic resource that serves as a single, definitive source of information about all NCI-supported clinical research. This resource allows the NCI to consolidate reporting, aggregate information and reduce redundant submissions. Information is submitted by clinical research administrators as designees of clinical investigators who conduct NCI-supported clinical research. The designees can electronically access the CTRP Web site to complete the initial trial registration. Subsequent to registration, four amendments and four study subject accrual updates occur per trial annually.

OMB approval is requested for 3 years. There are no costs to respondents other than their time. The estimated annualized burden hours are 38,500.

ESTIMATED ANNUALIZED BURDEN HOURS

Type of respondents	Instrument	Number of respondents	Number of responses per respondent	Average time per response (in hours)	Annual burden hours
Clinical Trials	Initial Registration	5,500	1	2	11,000
	Amendment	5,500	4	1	22,000
	Accrual Updates	5,500	4	15/60	5,500
Total		16,500			38,500

Dated: January 25, 2013.

Vivian Horovitch-Kelley,

NCI Project Clearance Liaison, National Cancer Institute (NCI), National Institutes of Health (NIH).

[FR Doc. 2013–02123 Filed 1–31–13; 8:45 am]

BILLING CODE 4140–01–P

DEPARTMENT OF HEALTH AND HUMAN SERVICES

National Institutes of Health

Prospective Grant of Exclusive License: Development of Human Monoclonal Antibodies Against DR4

AGENCY: National Institutes of Health, Public Health Service, HHS.

ACTION: Notice.

SUMMARY: This is notice, in accordance with 35 U.S.C. 209(c)(1) and 37 CFR 404.7(a)(1)(i), that the National Institutes of Health, Department of Health and Human Services, is contemplating the grant of an exclusive evaluation option license to practice the inventions embodied in PCT Patent Application No. PCT/US2011/040750 and foreign equivalents thereof entitled ''Agonistic Human Monoclonal Antibodies Against DR4'' (HHS Ref. No. E–158–2010/0) to Customized Biosciences, Inc., which is located in Pasadena, CA. The patent rights in these inventions have been assigned to the United States of America.

The prospective start-up exclusive commercial license territory may be worldwide and the field of use may be limited to ''use of the Licensed Patent Rights to develop therapeutic agents for the treatment of lymphomas, leukemias, hepatocellular cancer, colorectal cancer, ovarian cancer, lung cancer, rheumatoid arthritis, systemic lupus erythematosus, multiple sclerosis, amyotrophic lateral sclerosis, and Alzheimer's disease''.

DATES: Only written comments and/or applications for a license which are received by the NIH Office of Technology Transfer on or before February 19, 2013 will be considered.

ADDRESSES: Requests for copies of the patent application, inquiries, comments, and other materials relating to the contemplated exclusive evaluation option license should be directed to: Whitney A. Hastings, Ph.D., Licensing and Patenting Manager, Office of Technology Transfer, National Institutes of Health, 6011 Executive Boulevard, Suite 325, Rockville, MD 20852–3804; Telephone: (301) 451–7337; Facsimile: (301) 402–0220; Email: *hastingw@mail.nih.gov.*

SUPPLEMENTARY INFORMATION: The tumor necrosis factor (TNF)-related apoptosis-inducing ligand (TRAIL) and its functional receptors, DR4 and DR5, have been recognized as promising targets for cancer treatment. Therapeutics targeting TRAIL and its receptors are not only effective in killing many types of tumors but they also synergize with traditional therapies, and show efficacy against tumors that are otherwise resistant to conventional treatments.

The above identified patent application relates to the development of two human monoclonal antibodies (mAbs) that bind to death receptor 4 (''DR4''). The two mAbs were selected from a human phage displayed Fab library by panning against a recombinant DR4 extracellular domain. Therefore the two mAbs are fully human. These antibodies could have considerable potential as cancer therapeutics alone or in combination with other drugs. Further, these antibodies could be used as a research tool for the study of DR4.

The prospective start-up exclusive commercial license is being considered under the small business initiative launched on 1 October 2011, and will comply with the terms and conditions of 35 U.S.C. 209 and 37 CFR 404.7. The prospective start-up exclusive commercial license, may be granted unless the NIH receives written evidence and argument that establishes that the grant of the license would not be consistent with the requirements of 35 U.S.C. 209 and 37 CFR 404.7 within fifteen (15) days from the date of this published notice.

Complete applications for a license in the field of use filed in response to this notice will be treated as objections to the grant of the contemplated start-up exclusive commercial license. Comments and objections submitted to this notice will not be made available for public inspection and, to the extent permitted by law, will not be released under the Freedom of Information Act, 5 U.S.C. 552.

Dated: January 24, 2013.

Richard U. Rodriguez,

Director, Division of Technology Development and Transfer, Office of Technology Transfer, National Institutes of Health.

[FR Doc. 2013–02152 Filed 1–31–13; 8:45 am]

BILLING CODE 4140–01–P

DEPARTMENT OF HEALTH AND HUMAN SERVICES

National Institutes of Health

Center for Scientific Review; Notice of Closed Meetings

Pursuant to section 10(d) of the Federal Advisory Committee Act, as amended (5 U.S.C. App.), notice is hereby given of the following meetings.

The meetings will be closed to the public in accordance with the provisions set forth in sections 552b(c)(4) and 552b(c)(6), Title 5 U.S.C., as amended. The grant applications and the discussions could disclose confidential trade secrets or commercial property such as patentable material, and personal information concerning individuals associated with the grant applications, the disclosure of which would constitute a clearly unwarranted invasion of personal privacy.

Name of Committee: Center for Scientific Review Special Emphasis Panel, RFA Panel: Studies in Neonatal Resuscitation.

Date: February 27–28, 2013.

Time: 8:00 a.m. to 6:00 p.m.

Agenda: To review and evaluate grant applications.

Place: National Institutes of Health, 6701 Rockledge Drive, Bethesda, MD 20892 (Virtual Meeting).

Contact Person: Gary Hunnicutt, Ph.D., Scientific Review Officer, Center for Scientific Review, National Institutes of Health, 6701 Rockledge Drive, Room 6164, MSC 7892, Bethesda, MD 20892, 301–435–0229, *gary.hunnicutt@nih.gov.*

Name of Committee: Center for Scientific Review Special Emphasis Panel, Small Business: Dermatology, Rheumatology and Inflammation.
Date: February 27, 2013.
Time: 8:00 a.m. to 5:00 p.m.
Agenda: To review and evaluate grant applications.
Place: Embassy Suites at the Chevy Chase Pavilion, 4300 Military Road NW., Washington, DC 20015.
Contact Person: Aruna K Behera, Ph.D., Scientific Review Officer, Center for Scientific Review, National Institutes of Health, 6701 Rockledge Drive, Room 4211, MSC 7814, Bethesda, MD 20892, 301–435–6809, *beheraak@csr.nih.gov.*

Name of Committee: Center for Scientific Review Special Emphasis Panel, PAR–11–100: Alzheimer's Disease Pilot Clinical Trials.
Date: February 27, 2013.
Time: 1:00 p.m. to 4:00 p.m.
Agenda: To review and evaluate grant applications.
Place: National Institutes of Health, 6701 Rockledge Drive, Bethesda, MD 20892 (Virtual Meeting).
Contact Person: Mark Lindner, Ph.D., Scientific Review Officer, Center for Scientific Review, National Institutes of Health, 6701 Rockledge Drive, Room 3182, MSC 7770, Bethesda, MD 20892, 301–435–0913, *mark.lindner@csr.nih.gov*.

Name of Committee: Center for Scientific Review Special Emphasis Panel, Member Conflict: Societal and Ethical Issues in Research.
Date: February 27, 2013.
Time: 2:00 p.m. to 3:00 p.m.
Agenda: To review and evaluate grant applications.
Place: National Institutes of Health, 6701 Rockledge Drive, Bethesda, MD 20892, (Telephone Conference Call).
Contact Person: Lisa Steele, Ph.D., Scientific Review Officer, PSE IRG, Center for Scientific Review, National Institutes of Health, 6701 Rockledge Drive, Room 3139, MSC 7770, Bethesda, MD 20892, 301–594–6594, *steeleln@csr.nih.gov.*

Name of Committee: Center for Scientific Review Special Emphasis Panel, Par Panel: Biobehavioral pathways of physical activity and weight control on Cancer prognosis and survival.
Date: February 27, 2013.
Time: 2:00 p.m. to 5:00 p.m.
Agenda: To review and evaluate grant applications.
Place: National Institutes of Health, 6701 Rockledge Drive, Bethesda, MD 20892 (Virtual Meeting).
Contact Person: Fungai Chanetsa, MPH, Ph.D., Scientific Review Officer, Center for Scientific Review, National Institutes of Health, 6701 Rockledge Drive, Room 3135, MSC 7770, Bethesda, MD 20892, 301–408–9436, *fungai.chanetsa@nih.hhs.gov.*

Name of Committee: Center for Scientific Review Special Emphasis Panel, Healthcare Delivery and Methodologies Academic Research Enhancement Review.
Date: February 27, 2013.
Time: 12:00 p.m. to 4:00 p.m.
Agenda: To review and evaluate grant applications.
Place: National Institutes of Health, 6701 Rockledge Drive, Bethesda, MD 20892.
Contact Person: Melinda Jenkins, Ph.D., Scientific Review Officer, Center for Scientific Review, National Institutes of Health, 6701 Rockledge Drive, Room 3156, MSC 7770, Bethesda, MD 20892, 301–437–7872, *jenkinsml2@mail.nih.gov.*

Name of Committee: Center for Scientific Review Special Emphasis Panel, Fellowships: Neurodevelopment, Synaptic Plasticity and Neurodegeneration.
Date: February 28–March 1, 2013.
Time: 8:00 a.m. to 5:00 p.m.
Agenda: To review and evaluate grant applications.
Place: The St. Regis Hotel, 923 16th & K Streets NW., Washington, DC 20006.
Contact Person: Mary Schueler, Ph.D., Scientific Review Officer, Center for Scientific Review, National Institutes of Health, 6701 Rockledge Drive, Room 5214, MSC 7846, Bethesda, MD 20892, 301–451–0996, *marygs@csr.nih.gov.*

Name of Committee: Center for Scientific Review Special Emphasis Panel, PA12–006: Academic Research Enhancement Award.
Date: February 28, 2013.
Time: 8:00 a.m. to 5:00 p.m.
Agenda: To review and evaluate grant applications.
Place: The Westin Riverwalk, 420 W Market Street, San Antonio, TX 78205.
Contact Person: Rebecca Henry, Ph.D., Scientific Review Officer, Center for Scientific Review, National Institutes of Health, 6701 Rockledge Drive, Room 3222, MSC 7808, Bethesda, MD 20892, 301–435–1717, *henryrr@mail.nih.gov.*

Name of Committee: Center for Scientific Review Special Emphasis Panel, Small Business: Drug Discovery for Aging, Neuropsychiatric and Neurologic, Disorders.
Date: February 28–March 1, 2013.
Time: 8:00 a.m. to 5:00 p.m.
Agenda: To review and evaluate grant applications.
Place: Embassy Suites Chevy Chase Pavilion, 4300 Military Rd. NW., Washington, DC 20015.
Contact Person: Yuan Luo, Scientific Review Officer, Center for Scientific Review, National Institutes of Health, 6701 Rockledge Drive, Room 5207 MSC 7846, Bethesda, MD 20892–7846, 301–827–7915.

Name of Committee: Center for Scientific Review Special Emphasis Panel, Fellowships: Genes, Genomes, and Genetics.
Date: February 28, 2013.
Time: 8:00 a.m. to 6:00 p.m.
Agenda: To review and evaluate grant applications.
Place: National Institutes of Health, 6701 Rockledge Drive, Bethesda, MD 20892.
Contact Person: Ross D Shonat, Ph.D., Scientific Review Officer, Center for Scientific Review, National Institutes of Health, 6701 Rockledge Drive, Room 6172, MSC 7892, Bethesda, MD 20892, 301–435–2786, *ross.shonat@nih.hhs.gov.*

Name of Committee: Center for Scientific Review Special Emphasis Panel, Review of Neuroscience AREA Grant Applications.
Date: February 28–March 1, 2013.
Time: 8:00 a.m. to 4:00 p.m.
Agenda: To review and evaluate grant applications.
Place: Hotel Monaco Alexandria, 480 King Street, Alexandria, VA 22314.
Contact Person: Carole L Jelsema, Ph.D., Chief and Scientific Review Officer, Center for Scientific Review, National Institutes of Health, 6701 Rockledge Drive, Room 4176, MSC 7850, Bethesda, MD 20892, (301) 435–1248, *jelsemac@csr.nih.gov.*

Name of Committee: Population Sciences and Epidemiology Integrated Review Group, Social Sciences and Population Studies B Study Section.
Date: February 28–March 1, 2013.
Time: 8:30 a.m. to 5:00 p.m.
Agenda: To review and evaluate grant applications.
Place: Sheraton Delfina Santa Monica Hotel, 530 West Pico Boulevard, Santa Monica, CA 90405.
Contact Person: Valerie Durrant, Ph.D., Scientific Review Officer, Center for Scientific Review, National Institutes of Health, 6701 Rockledge Drive, Room 3148, MSC 7770, Bethesda, MD 20892, (301) 827–6390, *durrantv@csr.nih.gov.*

Name of Committee: Center for Scientific Review Special Emphasis Panel, Member Conflicts: Epidemiology and Genetics of Cancer.
Date: February 28, 2013.
Time: 12:00 p.m. to 5:00 p.m.
Agenda: To review and evaluate grant applications.
Place: National Institutes of Health, 6701 Rockledge Drive, Bethesda, MD 20892, (Telephone Conference Call).
Contact Person: Julia Krushkal, Ph.D., Scientific Review Officer, Center for Scientific Review, National Institutes of Health, 6701 Rockledge Drive, Room 3148, MSC 7770, Bethesda, MD 20892, 301–435–1782, *krushkalj@csr.nih.gov.*

(Catalogue of Federal Domestic Assistance Program Nos. 93.306, Comparative Medicine; 93.333, Clinical Research, 93.306, 93.333, 93.337, 93.393–93.396, 93.837–93.844, 93.846–93.878, 93.892, 93.893, National Institutes of Health, HHS)

Dated: January 25, 2013.

Anna Snouffer,

Deputy Director, Office of Federal Advisory Committee Policy.

[FR Doc. 2013–02153 Filed 1–31–13; 8:45 am]

BILLING CODE 4140–01–P

ADVISORY COUNCIL ON HISTORIC PRESERVATION

Proposed Alterations to Pawtucket Dam on the Merrimack River in Lowell, MA; Public Meeting

AGENCY: Advisory Council on Historic Preservation.

ACTION: Notice of public meeting.

Overview Information: Public meeting to inform the drafting of formal

comments of the Advisory Council on Historic Preservation to the Federal Energy Regulatory Commission, under Section 106 of the National Historic Preservation Act, regarding proposed alterations to Pawtucket Dam on the Merrimack River in Lowell, MA.

SUMMARY: The Federal Energy Regulatory Commission (FERC) has terminated consultation under Section 106 of the National Historic Preservation Act regarding a proposal by the Lowell Hydroelectric Project (Lowell Hydro) to modify the Pawtucket Dam on the Merrimack River in Lowell, Massachusetts. The Advisory Council on Historic Preservation (ACHP) will issue advisory comments to FERC regarding this project on February 22, 2013. The ACHP will hold a public meeting in Lowell on February 5, 2013 to receive stakeholder and public views regarding the effects of the project on historic properties.

DATES: February 5, 2013, from 7:00 p.m. to 9:00 p.m. (E.S.T).

ADDRESSES: Special Events Center, Lowell National Historical Park, Boott Mills, Second Floor, 115 John Street, Lowell, MA 01852.

FOR FURTHER INFORMATION CONTACT: John T. Eddins, Program Analyst/Archaeologist, Office of Federal Agency Programs, Advisory Council on Historic Preservation, 1100 Pennsylvania Avenue NW., Suite 803, Washington, DC 20004; Telephone: 202–606–8553; or Email: *pdcomments@achp.gov*.

SUPPLEMENTARY INFORMATION: FERC is in the final stages of review of a proposal by the Lowell Hydroelectric Project to modify the Pawtucket Dam on the Merrimack River in the city of Lowell, Middlesex County, Massachusetts. In 2010, Boott Hydropower, Inc. and the Eldred L. Field Hydroelectric Facility Trust (Boott), co-licensees for the Lowell Hydro Project, filed a non-capacity amendment for its license with FERC, proposing modifications to the dam that would address concerns expressed by local residents about flooding associated with Pawtucket dam operations and also more efficiently maintain an operating pool for the hydroelectric facility.

As part of that review process, FERC must comply with Section 106 of the National Historic Preservation Act and its implementing regulations (Section 106), ''Protection of Historic Properties'' at 36 CFR part 800, which require that federal agencies take into account the effects of undertakings they carry out, financially assist, or license on historic properties. When, as is the case here, an undertaking may adversely affect a historic property but certain parties cannot reach an agreement to resolve such effects, the ACHP issues formal comments to the head of the relevant agency. The public meeting that is the subject of this notice will provide an opportunity for FERC, all consulting parties, and the public to provide their views to the ACHP on this undertaking. The ACHP will consider such views as it develops and finalizes its formal comments.

The Pawtucket Dam is a nationally significant historic engineering resource listed in the National Register of Historic Places (National Register) and as a National Historic Landmark (NHL) within the Lowell Locks and Canals Historic District (LLCHD). The LLCHD is nationally significant as representative of America's first great industrial city and today encompasses the most historically significant extant aggregation of early 19th-century industrial structures and artifacts in the United States. The Pawtucket Dam is also included as a nationally significant structure in the Lowell Historic Preservation District (LHPD) and the National Park Service's List of Classified Structures (LCS) for Lowell National Historic Park (LNHP), both listed on the National Register. Stakeholders and members of the public have expressed concerns about the effects of the project on Pawtucket Dam itself, the LLCHD, LHPD, and LNHP.

On January 8, 2013, FERC determined that agreement on how to resolve adverse effects to these historic properties could not be reached among consulting parties, and requested that the ACHP provide comments in order to conclude the Section 106 review process. A panel of ACHP members will issue comments to the head of the agency within 45 days of the request (i.e., on or before February 22, 2013). Once the head of FERC considers the ACHP comments and responds to them in accordance with the Section 106 regulations and Section 110(l) of the National Historic Preservation Act, FERC will have concluded the Section 106 process and may make a final decision on the project. The head of FERC must provide a summary of the decision that contains a rationale for the decision and evidence of consideration of the ACHP's comments, providing a copy of the summary to the ACHP and all consulting parties, and notifying the public.

Priority for speaking at the public meeting will be given to FERC, the Massachusetts State Historic Preservation Officer, the National Park Service, and Boott, and then to those who notify the ACHP of their desire to speak in advance of the meeting via email to *pdcomments@achp.gov* or fax to 202–606–5072. Those interested in speaking should provide the name and the organization the speaker officially represents (if any). Speakers may be given prescribed time limits. Requests to speak will also be taken at the meeting. People who have not preregistered will be allowed to speak as time permits.

The ACHP also welcomes written comments from any party. Written comments may be sent via mail (addressed to the attention of John T. Eddins, Program Analyst/Archaeologist, Office of Federal Agency Programs, Advisory Council on Historic Preservation, 1100 Pennsylvania Avenue NW., Suite 803, Washington, DC 20004), fax (at 202–606–8672), or via email (addressed to *pdcomments@achp.gov*). All written comments received by the ACHP on or before 5 p.m. February 15, 2013, will be part of the public record and reviewed by the ACHP prior to the transmittal of its formal comments.

Authority: 36 CFR 800.7.

Dated: January 29, 2013.

Reid Nelson,

Acting Executive Director.

[FR Doc. 2013–02210 Filed 1–31–13; 8:45 am]

BILLING CODE 4310–K6–P

DEPARTMENT OF HOMELAND SECURITY

[Docket No. DHS–2013–0001]

Agency Information Collection Activities: Submission for Review; Information Collection Extension Request for the Support Anti-Terrorism by Fostering Effective Technologies (SAFETY) Act Program

AGENCY: Science and Technology Directorate, DHS.

ACTION: 30-day Notice and request for comment.

SUMMARY: The Department of Homeland Security (DHS) is soliciting public comment on the following forms: (1) Registration as a Seller of an Anti-Terrorism Technology (DHS Form 10010); (2) Request for a Pre-Application Consultation (DHS Form 10009); (3) Notice of License of Qualified Anti-Terrorism Technology (DHS Form 10003); (4) Notice of Modification of Qualified Anti-Terrorism Technology (DHS Form 10002); (5) Application for Transfer of SAFETY Act Designation and Certification (DHS Form 10001); (6) Application for Renewal Of SAFETY Act Protections of a Qualified Anti-Terrorism Technology (DHS Form 10057); (7) Application for SAFETY Act

Developmental Testing and Evaluation Designation (DHS Form 10006); (8) Application for SAFETY Act Designation (DHS Form 10008); (9) Application for SAFETY Act Certification (DHS Form 10007); (10) SAFETY Act Block Designation Application (DHS Form 10005); and (11) SAFETY Act Block Certification Application (DHS Form 10004).

DATES: Comments are encouraged and will be accepted until March 4, 2013.

ADDRESSES: You may submit comments, identified by docket number DHS–2013–0001, by one of the following methods:

• *Federal eRulemaking Portal: http://www.regulations.gov.* Please follow the instructions for submitting comments.

• *Email: douglas.m.smith@hq.dhs.gov.* Please include docket number DHS–2013–0001 in the subject line of the message.

• *Mail:* Science and Technology Directorate, ATTN: SAFETY Act, 245 Murray Lane SW., Mail Stop 0202, Washington, DC 20528.

FOR FURTHER INFORMATION CONTACT: *douglas.m.smith@hq.dhs.gov* (202) 254–5604 (Not a toll free number).

SUPPLEMENTARY INFORMATION: DHS S&T provides a secure Web site, accessible through *www.SAFETYAct.gov,* through which the public can learn about the program, submit applications for SAFETY Act protections, submit questions to the Office of SAFETY Act Implementation (OSAI), and provide feedback. The data collection forms have standardized the collection of information that is both necessary and essential for the DHS OSAI.

The SAFETY Act program promotes the development and use of anti-terrorism technologies that will enhance the protection of the nation and provides risk management and litigation management protections for sellers of Qualified Anti-Terrorism Technology (QATT) and others in the supply and distribution chain. The Department of Homeland Security Science & Technology Directorate (DHS S&T) currently has approval to collect information for the implementation of the SAFETY Act program until March 31, 2013. With this notice, DHS S&T seeks approval to renew this information collection for continued use after this date. The SAFETY Act program requires the collection of this information in order to evaluate and qualify Anti-Terrorism Technologies, based on the economic and technical criteria contained in the Regulations Implementing the Support Anti-Terrorism by Fostering Effective Technologies Act (the Final Rule), for protection in accordance with the Act, and therefore encourage the development and deployment of new and innovative anti-terrorism products and services. The Support Anti-Terrorism by Fostering Effective Technologies (SAFETY) Act (6 U.S.C. 441) was enacted as part of the Homeland Security Act of 2002, Public Law 107– 296 establishing this requirement. This notice and request for comments is required by the Paperwork Reduction Act of 1995 (Pub. L. 104–13, 44 U.S.C. chapter 35).

DHS S&T currently has approval to collect information utilizing the Registration of a Seller as an Anti-Terrorism Technology (DHS Form 10010), Request for a Pre-Application Consultation (DHS Form 10009), Notice of License of Qualified Anti-Terrorism Technology (DHS Form 10003), Notice of Modification of Qualified Anti-Terrorism Technology (DHS Form 10002), Application for Transfer of SAFETY Act Designation and Certification (DHS Form 10001), Application for Renewal Of SAFETY Act Protections of a Qualified Anti-Terrorism Technology (DHS Form 10057), Application for SAFETY Act Developmental Testing and Evaluation Designation (DHS Form 10006), Application for SAFETY Act Designation (DHS Form 10008), Application for SAFETY Act Certification (DHS Form 10007), SAFETY Act Block Designation Application (DHS Form 10005), SAFETY Act Block Certification Application (DHS Form 10004) until 31 March 2013 with OMB approval number 1640–0001.

The Department is committed to improving its information collection and urges all interested parties to suggest how these materials can further reduce burden while seeking necessary information under the Act.

DHS is particularly interested in comments that:

(1) Evaluate whether the proposed collection of information is necessary for the proper performance of the functions of the agency, including whether the information will have practical utility;

(2) Evaluate the accuracy of the agency's estimate of the burden of the proposed collection of information, including the validity of the methodology and assumptions used;

(3) Suggest ways to enhance the quality, utility, and clarity of the information to be collected; and

(4) Suggest ways to minimize the burden of the collection of information on those who are to respond, including through the use of appropriate automated, electronic, mechanical, or other technological collection techniques or other forms of information technology, e.g., permitting electronic submissions of responses.

Overview of Information Collection

(1) *Type of Information Collection:* Existing information collection.

(2) *Title of the Form/Collection:* SAFETY Act Program.

(3) *Agency Form Number, if any, and the applicable component of the Department of Homeland Security sponsoring the collection:* DHS Science & Technology Directorate, DHS Forms 10001, 10002, 10003, 10004, 10005, 10006, 10007, 10008, 10009, 10010, and 10057.

(4) *Affected public who will be asked or required to respond, as well as a brief abstract:* Business entities, Associations, and State, Local and Tribal Government entities. Applications are reviewed for benefits, technology/program evaluations, and regulatory compliance.

(5) *An estimate of the total number of respondents and the amount of time estimated for an average respondent to respond:*

a. *Estimate of the total number of respondents:* 950.

b. *An estimate of the time for an average respondent to respond:* 18.2 burden hours.

(6) *An estimate of the total public burden (in hours) associated with the collection:* 17,300 burden hours.

Gregg Piermarini,

Deputy Chief Information Officer for Science and Technology.

[FR Doc. 2013–02125 Filed 1–31–13; 8:45 am]

BILLING CODE 9110–9F–P

DEPARTMENT OF HOMELAND SECURITY

Federal Emergency Management Agency

[Docket ID FEMA–2012–0003: Internal Agency Docket No. FEMA–B–1272]

Proposed Flood Hazard Determinations

Correction

In notice document 2012–27366, appearing on pages 67016–67018 in the issue of Thursday, November 8, 2012, make the following corrections:

1. On page 67016, in the Table titled ''Osage County, Oklahoma, and Incorporated Areas,'' the entry for the ''Maps Available for Inspection Online at:'' Link is corrected to read as follows: *http://riskmap6.com/Community.aspx?cid=229&sid=4*

2. On page 67018, in the Table titled ''Kay County, Oklahoma and Incorporated Areas,'' the entry for the ''Maps Available for Inspection Online at:'' Link is corrected to read as follows: *http://riskmap6.com/Community.aspx?cid=208&sid=4*

3. On page 67018, in the Table titled ''Travis County, Texas, and Incorporated Areas,'' the entry for the ''Maps Available for Inspection Online at:'' Link is corrected to read as follows: *http://riskmap6.com/Community.aspx?cid=476&sid=5*

[FR Doc. C1–2012–27366 Filed 1–31–13; 8:45 am]

BILLING CODE 1505– 01–D

DEPARTMENT OF HOMELAND SECURITY

U.S. Customs and Border Protection

Accreditation and Approval of Chemical and Petrochemical Inspections, LP, as a Commercial Gauger and Laboratory

AGENCY: U.S. Customs and Border Protection, Department of Homeland Security.

ACTION: Notice of accreditation and approval of Chemical and Petrochemical Inspections, LP, as a commercial gauger and laboratory.

SUMMARY: Notice is hereby given, pursuant to CBP regulations, that Chemical and Petrochemical Inspections, LP, has been approved to gauge and accredited to test petroleum and petroleum products, organic chemicals and vegetable oils for customs purposes for the next three years as of July 17, 2012.

DATES: The accreditation and approval of Chemical and Petrochemical Inspections, LP, as commercial gauger and laboratory became effective on July 17, 2012. The next triennial inspection date will be scheduled for July 2015.

FOR FURTHER INFORMATION CONTACT: Approved Gauger and Accredited Laboratories Manager, Laboratories and Scientific Services, U.S. Customs and Border Protection, 1300 Pennsylvania Avenue NW., Suite 1500N, Washington, DC 20229, tel. 202–344–1060.

SUPPLEMENTARY INFORMATION: Notice is hereby given pursuant to 19 CFR 151.12 and 19 CFR 151.13, Chemical and Petrochemical Inspections, LP, 5300 39th Street, Groves, TX 77619, has been approved to gauge and accredited to test petroleum and petroleum products, organic chemicals and vegetable oils for customs purposes, in accordance with the provisions of 19 CFR 151.12 and 19 CFR 151.13. Anyone wishing to employ this entity to conduct laboratory analyses and gauger services should request and receive written assurances from the entity that it is accredited or approved by the U.S. Customs and Border Protection to conduct the specific test or gauger service requested. Alternatively, inquiries regarding the specific test or gauger service this entity is accredited or approved to perform may be directed to the U.S. Customs and Border Protection by calling (202) 344–1060. The inquiry may also be sent to *cbp.labhq@dhs.gov.* Please reference the Web site listed below for a complete listing of CBP approved gaugers and accredited laboratories.

http://cbp.gov/linkhandler/cgov/trade/basic_trade/labs_scientific_svcs/commercial_gaugers/gaulist.ctt/gaulist.pdf

Dated: January 23, 2013.

Ira S. Reese,

Executive Director, Laboratories and Scientific Services.

[FR Doc. 2013–02127 Filed 1–31–13; 8:45 am]

BILLING CODE 9111–14–P

DEPARTMENT OF HOUSING AND URBAN DEVELOPMENT

[Docket No. FR–5681–N–05]

Federal Property Suitable as Facilities To Assist the Homeless

AGENCY: Office of the Assistant Secretary for Community Planning and Development, HUD.

ACTION: Notice.

SUMMARY: This Notice identifies unutilized, underutilized, excess, and surplus Federal property reviewed by HUD for suitability for use to assist the homeless.

FOR FURTHER INFORMATION CONTACT: Juanita Perry, Department of Housing and Urban Development, 451 Seventh Street SW., Room 7266, Washington, DC 20410; telephone (202) 402–3970; TTY number for the hearing- and speech-impaired (202) 708–2565 (these telephone numbers are not toll-free), or call the toll-free Title V information line at 800–927–7588.

SUPPLEMENTARY INFORMATION: In accordance with 24 CFR part 581 and section 501 of the Stewart B. McKinney Homeless Assistance Act (42 U.S.C. 11411), as amended, HUD is publishing this Notice to identify Federal buildings and other real property that HUD has reviewed for suitability for use to assist the homeless. The properties were reviewed using information provided to HUD by Federal landholding agencies regarding unutilized and underutilized buildings and real property controlled by such agencies or by GSA regarding its inventory of excess or surplus Federal property. This Notice is also published in order to comply with the December 12, 1988 Court Order in *National Coalition for the Homeless* v. *Veterans Administration,* No. 88–2503–OG (D.D.C.).

Properties reviewed are listed in this Notice according to the following categories: Suitable/available, suitable/unavailable, suitable/to be excess, and unsuitable. The properties listed in the three suitable categories have been reviewed by the landholding agencies, and each agency has transmitted to HUD: (1) Its intention to make the property available for use to assist the homeless, (2) its intention to declare the property excess to the agency's needs, or (3) a statement of the reasons that the property cannot be declared excess or made available for use as facilities to assist the homeless.

Properties listed as suitable/available will be available exclusively for homeless use for a period of 60 days from the date of this Notice. Where property is described as for ''off-site use only'' recipients of the property will be required to relocate the building to their own site at their own expense. Homeless assistance providers interested in any such property should send a written expression of interest to HHS, addressed to Theresa Ritta, Division of Property Management, Program Support Center, HHS, room 5B–17, 5600 Fishers Lane, Rockville, MD 20857; (301) 443–2265. (This is not a toll-free number.) HHS will mail to the interested provider an application packet, which will include instructions for completing the application. In order to maximize the opportunity to utilize a suitable property, providers should submit their written expressions of interest as soon as possible. For complete details concerning the processing of applications, the reader is encouraged to refer to the interim rule governing this program, 24 CFR part 581.

For properties listed as suitable/to be excess, that property may, if subsequently accepted as excess by GSA, be made available for use by the homeless in accordance with applicable law, subject to screening for other Federal use. At the appropriate time, HUD will publish the property in a Notice showing it as either suitable/available or suitable/unavailable.

For properties listed as suitable/unavailable, the landholding agency has decided that the property cannot be declared excess or made available for

use to assist the homeless, and the property will not be available.

Properties listed as unsuitable will not be made available for any other purpose for 20 days from the date of this Notice. Homeless assistance providers interested in a review by HUD of the determination of unsuitability should call the toll free information line at 1–800–927–7588 for detailed instructions or write a letter to Ann Marie Oliva at the address listed at the beginning of this Notice. Included in the request for review should be the property address (including zip code), the date of publication in the **Federal Register**, the landholding agency, and the property number.

For more information regarding particular properties identified in this Notice (i.e., acreage, floor plan, existing sanitary facilities, exact street address), providers should contact the appropriate landholding agencies at the following addresses: *Coast Guard:* Commandant, United States Coast Guard, Attn: Jennifer Stomber, 2100 Second St. SW., Stop 7901, Washington, DC 20593–0001; (202) 475–5609; *Interior:* Mr. Michael Wright, Acquisition & Property Management, Department of the Interior, Mailstop 4262; 1849 C Street NW., Washington, DC 20240; (202)–513–0795; *Navy:* Mr. Steve Matteo, Department of the Navy, Asset Management Division, Naval Facilities Engineering Command, Washington Navy Yard, 1330 Patterson Ave. SW., Suite 1000, Washington, DC 20374; (202)–685–9426 (This is not toll-free numbers).

Dated: January 24, 2013.

Mark Johnston,

Deputy Assistant Secretary for Special Needs.

TITLE V, FEDERAL SURPLUS PROPERTY PROGRAM FEDERAL REGISTER REPORT FOR 02/01/2013

Unsuitable Properties

Building

California

Facility 31075
1 Admin. Circle
China Lake CA 93555
Landholding Agency: Navy
Property Number: 77201310001
Status: Excess
Comments: w/in secured boundary of a military reservation; public access denied & no alternative method to gain access w/ out compromising nat'l security
Reasons: Secured Area

New York

U.S. Coast Guard Station
W. 2nd
Oswego NY 13126
Landholding Agency: Coast Guard
Property Number: 88201310001
Status: Excess
Comments: located on secured military installation; public access denied & no alternative method to gain access w/out compromising nat'l security
Reasons: Secured Area

Pennsylvania

Tract 101–42
Audubon Rd.
Norristown PA 19403
Landholding Agency: Interior
Property Number: 61201310001
Status: Excess
Directions: Wagonseller garage, shed, tenant house 2, & greenhouse
Comments: documented deficiencies; all properties' roofs are completely collapsed; floors are severally dry rotted; unsound foundation w/multi-large cracks in foundation
Reasons: Extensive deterioration

[FR Doc. 2013–01892 Filed 1–31–13; 8:45 am]

BILLING CODE 4210–67–P

DEPARTMENT OF HOUSING AND URBAN DEVELOPMENT

[Docket No. FR–5695–N–01]

Request for Comment on the Redesign of the American Housing Survey

AGENCY: Office of the Assistant Secretary for Policy Development and Research, HUD.

ACTION: Notice.

SUMMARY: This notice announces the intent of the Department of Housing and Urban Development (HUD) to redesign the American Housing Survey (AHS) for 2015 and later years. As part of this redesign, HUD is soliciting public comments. HUD is interested in all comments, especially from government policy makers, academic researchers, and AHS data users that specify: (1) Concerns related to redesigning the AHS sample; (2) important content that should be added to the AHS to meet current and future housing data needs; (3) current content that is no longer relevant, or has limited usefulness; and (4) ideas for expanding the dissemination of the AHS data. To aid in the development of public comments, HUD has listed questions that have been posed by AHS survey managers and current AHS users. HUD encourages persons interested in commenting to consider these questions and to propose additional questions or provide additional topics HUD should take into consideration.

DATES: Comments Due Date: April 2, 2013.

ADDRESSES: Interested persons are invited to submit comments regarding this proposal. Comments must refer to the above docket number and title. There are two methods for submitting public comments.

1. *Submission of Comments by Mail.* Comments may be submitted by mail to Shawn Bucholtz, Director, Housing and Demographic Analysis Division, Office of Policy Development and Research, Department of Housing and Urban Development, 451 7th St. SW., Room 8222, Washington, DC 20410.

2. Electronic Submission of Comments. Interested persons may submit comments electronically through the Federal eRulemaking Portal at *www.regulations.gov.* HUD strongly encourages commenters to submit comments electronically. Electronic submission of comments allows the commenter maximum time to prepare and submit a comment, ensures timely receipt by HUD, and enables HUD to make them immediately available to the public. Comments submitted electronically through the *www.regulations.gov* Web site can be viewed by other commenters and interested members of the public. Commenters should follow the instructions provided on that site to submit comments electronically.

Note: To receive consideration as public comments, comments must be submitted through one of the two methods specified above. Again, all submissions must refer to the docket number and title of the rule.

No Facsimile Comments. Facsimile (FAX) comments are not acceptable.

Public Inspection of Public Comments. All properly submitted comments and communications submitted to HUD will be available for public inspection and copying between 8 a.m. and 5 p.m. weekdays at the above address. Due to security measures at the HUD Headquarters building, an advance appointment to review the public comments must be scheduled by calling 202–402–5538 (this is not a toll-free number). Individuals with speech or hearing impairments may access this number via TTY by calling the toll-free Federal Relay Service at 800–877–8339. Copies of all comments submitted are available for inspection and downloading at *www.regulations.gov.*

FOR FURTHER INFORMATION CONTACT: Shawn Bucholtz, Director, Housing and Demographic Analysis Division, Office of Policy, Development and Research, 451 7th Street SW., Room 8222, Washington, DC 20410–0500, telephone number 202–402–5538 (this is not a toll-free number). Hearing or speech-impaired individuals may access this number via TTY by calling the toll-free Federal Relay Service at telephone number 1–800–877–8339.

SUPPLEMENTARY INFORMATION:

A. Background

The American Housing Survey provides a periodic measure of the size and composition of the country's housing inventory. HUD provides all funding and oversight for the AHS. Through an interagency agreement, the Census Bureau provides operational management and field data collection.

The current sample was drawn in 1985, with additions and subtractions to account for new construction, demolitions and conversions. The 2013 AHS will be the final survey administered to the current sample. HUD will draw a new sample for 2015, presenting HUD with an opportunity to redesign the survey to better meet current and future needs.

The current AHS biennially collects data on subjects such as the amount and types of changes in the housing stock, the physical condition of the housing stock, the characteristics of the occupants, housing costs, the persons eligible for and beneficiaries of assisted housing, and the number and characteristics of vacant units. Starting in 2009, the AHS questions were classified into ''core'' modules and ''rotating topical'' modules in order to minimize respondent burden and satisfy widening needs for data content. Questions in the core modules are asked in each survey and typically undergo only minor revisions between surveys. Questions in the rotating topical modules are asked on a rotating basis. For instance, questions about potential health and safety hazards and home modifications made to assist occupants living with disabilities that were added to the 2011 AHS will not be included in the 2013 AHS. The 2013 AHS may include questions about neighborhood characteristics, people who had to temporarily move in with other households, ability to travel via public transportation, bicycling, or walking, energy efficiency, and emergency preparedness that were not in the 2011 AHS.

The current AHS sample includes approximately 60,000 housing units that are visited every two years for the purposes of generating national estimates and additional housing units in metropolitan areas that are visited periodically for the purposes of generating metropolitan area estimates. These are referred to as metropolitan area oversamples. In 2011, 29 metropolitan area oversamples were conducted.

HUD uses the AHS data to monitor the interaction among housing needs, demand and supply, as well as changes in housing conditions and costs, to aid in the development of housing policies and the design of housing programs appropriate for different target groups, such as first-time home buyers and the elderly. The AHS data allow HUD to evaluate, monitor, and design HUD programs to improve efficiency and effectiveness. Policy analysts, program managers, budget analysts, and Congressional staff use AHS data to advise executive and legislative branches about housing conditions and the suitability of public policy initiatives. Academic researchers and private organizations use AHS data in efforts of specific interest and concern to their respective communities.

B. AHS Sample Redesign Issues

The current AHS sample design includes a single longitudinal panel. As previously mentioned, some housing units in this single panel are surveyed every two years (for national estimates) and some are surveyed less frequently (for metropolitan area estimates). In 2011, the Census Bureau and HUD published a whitepaper on sample redesign options. This whitepaper evaluated the performance of the current sample design, identified potential problems with the current sample design, and presented options for alternative sample designs. After evaluating the whitepaper, HUD determined that the current single panel sample design was the best option.

Through formal discussions with the Census Bureau and through informal discussions with AHS data users, HUD has identified other sample redesign issues that it has explored or will explore as part of the redesign process. The following is a list of questions already raised concerning the AHS sample redesign:

1. What is the appropriate sample size for generating national estimates, taking into consideration the necessary level of precision required by AHS users?
2. Should the AHS continue to oversample metropolitan areas? If so, how many metropolitan areas should be oversampled, which metropolitan areas should be oversampled, and how large should the sample size be for metropolitan oversamples?
3. What housing unit subgroups should HUD consider oversampling? For instance, in prior years, HUD has oversampled HUD-assisted housing, assisted housing for the elderly, and manufactured housing.

C. AHS Content and Question Redesign Issues

While a good sample design is necessary for a useful survey, the survey's content and questions are the most important features. Relevant content gathered through poorly-designed questions impacts the accuracy of survey results. Irrelevant content gathered though well-designed questions may not be useful. For a survey to maximize its usefulness the content must be relevant and it must be gathered through properly designed questions that yield accurate answers from respondents.

The AHS is a housing survey and housing is a multi-dimensional good. An individual household's choice of a particular housing unit is a complex decision and may rely on many factors. As such, housing surveys should include content about the structure of the housing unit, the characteristics of the location of the housing unit, and the occupants of the housing unit. To accomplish this goal, the current AHS includes core modules that are used in each survey and rotating topical modules that are used as deemed necessary by HUD.

Through formal discussions with the Census Bureau and through informal discussions with AHS data users, HUD has identified content and question issues that it will explore as part of the redesign process. The following is a list of issues raised concerning the AHS content and questions:

1. Should HUD continue the strategy of core and rotating topical modules?
2. What content should be included in the core modules, considering that housing characteristics change slowly?
3. What topics should HUD consider for rotating topical modules from 2015–2019?
4. What questions should HUD consider reformatting to elicit more accurate responses? For instance, are the questions on utility usage providing accurate information?
5. What questions in the AHS are duplicative with other surveys and should be under consideration for removal from the survey?
6. What data collection modes (web, telephone, face-to-face interviews, administrative data matching) should be used, given the secular decrease in response rates in both face-to-face and telephone surveys? How should questions be formulated differently if we anticipate multimode data collection?

D. AHS Data Dissemination Redesign Issues

AHS data is disseminated in three ways. First, summary statistics tables are created by the Census Bureau and are made available on the web in tabular format. Second, AHS microdata is made available through a public use file

(PUF), which is available on the web. Due to the complexity of the PUF, several other PUF resources are made available to assist AHS users. Third, researchers wishing to use aspects of the AHS microdata that cannot be released publicly without risking the privacy of AHS respondents can gain access at one of the Census Research Data Centers with HUD and Census Bureau approval. HUD is interested in knowing how the AHS data might be disseminated differently to add value for the AHS user community and the general public.

1. What geographic identifiers should be disclosed on the PUF, taking into consideration that disclosure policies require that geographic identifiers do not reveal geographic entities with less than 100,000 persons? Prior geographic identifiers include specific metropolitan area name, metropolitan area status, Census Urban Area classifier, State name, County name, and HUD-created sub-metropolitan area zones.

2. Are the national and metropolitan area summary tables useful to AHS data users?

3. In what ways can HUD improve the organization and dissemination of the PUF?

E. Request for Comments

HUD is seeking additional information from the public regarding AHS redesign issues. Governmental policy makers, academic researchers, and other interested parties are encouraged to participate by submitting comments. Official address, contact, and due date for submitting comments are stated above.

Dated: January 23, 2013.

Jean Lin Pao,

General Deputy Assistant Secretary for Policy Development and Research.

[FR Doc. E3–2013–2261 Filed 1–31–13; 8:45 am]

BILLING CODE 4210–62–P

DEPARTMENT OF THE INTERIOR

Fish and Wildlife Service

[FWS–R2–ES–2012–N271; FXES11120200000F2–134–FF02ENEH00]

Notice of Intent To Prepare a Draft Environmental Impact Statement for a General Conservation Plan for the American Burying Beetle for Pipelines and Well Field Development in Oklahoma and Texas

AGENCY: Fish and Wildlife Service, Interior.

ACTION: Notice of intent; announcement of meetings; request for comments.

SUMMARY: We, the U.S. Fish and Wildlife Service (Service), advise the public that we intend to prepare a draft environmental impact statement (EIS) to evaluate the impacts of, and alternatives to, the proposed General Conservation Plan (GCP) for incidental take of the federally listed American burying beetle (ABB) resulting from activities associated with construction, maintenance, operation, and repair of oil and gas pipelines, and related well field activities. Individual oil and gas companies would apply for an Endangered Species Act 10(a)(1)(B) permit and agree to implement the approved GCP. A GCP is a conservation plan suitable for the needs of a local area where the NEPA requirements and permit issuance criteria are met. After approval of the GCP, individuals apply for a permit for incidental take associated with activities covered in the GCP and agree to comply with the terms and conditions of the GCP. We notice these permit applications and request comments from the public.

DATES: In order to be included in the analysis, all comments must be received by March 4, 2013. We will hold two public scoping meetings within the 43-county proposed covered area within the ABB's range. Exact meeting locations and times will be noticed in local newspapers and at the Oklahoma Ecological Services Office Web site, *http://www.fws.gov/southwest/es/Oklahoma/,* at least 2 weeks prior to each event.

ADDRESSES: Please provide comments in writing, by one of the following methods:

Email: ABB_GCP@fws.gov; or

U.S. mail: Field Supervisor, Oklahoma Ecological Services Field Office, U.S. Fish and Wildlife Service, 9014 E. 21st St., Tulsa, OK 74129.

Please specify that your information request or comments concerns the Oil and Gas draft EIS/GCP.

FOR FURTHER INFORMATION CONTACT: Dr. Dixie Porter, by U.S. mail at the U.S. Fish and Wildlife Service, Oklahoma Ecological Services Field Office, 9014 E. 21st St., Tulsa, OK 74129, or by phone at 918–581–7458.

SUPPLEMENTARY INFORMATION: We publish this notice in compliance with the National Environmental Policy Act (NEPA) of 1969, as amended (42 U.S.C. 4321 *et seq.*), and its implementing regulations in the Code of Federal Regulations (CFR) at 40 CFR 1506.6, and section 10(c) of the Endangered Species Act of 1973, as amended (Act; 16 U.S.C. 1531 *et seq.*). We intend to gather the information necessary to prepare an EIS to evaluate the impacts of, and alternatives to, the proposed issuance of incidental take permits under the Act to applicants who agree to implement the GCP, which is also under development. The proposed GCP is a habitat conservation plan that will cover take of the ABB that is incidental to activities associated with the construction, operation, maintenance, and repair of oil and gas pipelines and related well field activities, and will include measures necessary to minimize and mitigate impacts to covered species and their habitats to the maximum extent practicable. All NEPA requirements and permit issuance criteria will be met up front; then, after approval of the GCP, companies will apply for an incidental take permit pursuant to the GCP.

Background

Section 9 of the Act prohibits ''taking'' of fish and wildlife species listed as endangered under section 4 of the Act. The Act's implementing regulations extend, under certain circumstances, the prohibition of take to threatened species. Under section 3 of the Act, the term ''take'' means ''to harass, harm, pursue, hunt, shoot, wound, kill, trap, capture, or collect, or to attempt to engage in any such conduct.'' The term ''harm'' is defined by regulation as ''an act which actually kills or injures wildlife. Such act may include significant habitat modification or degradation where it actually kills or injures wildlife by significantly impairing essential behavioral patterns, including breeding, feeding, or sheltering'' (50 CFR 17.3). The term ''harass'' is defined in the regulations as ''an intentional or negligent act or omission which creates the likelihood of injury to wildlife by annoying it to such an extent as to significantly disrupt normal behavioral patterns which include, but are not limited to, breeding, feeding, or sheltering'' (50 CFR 17.3).

Under Section 10(a)(1)(B), the Secretary of the Interior may authorize the taking of federally listed species if such taking occurs incidental to otherwise legal activities and where a conservation plan has been developed that describes: (1) The impact that will result from such taking; (2) the steps an applicant will take to minimize and mitigate that take to the maximum extent practicable, and the funding that will be available to implement such steps; (3) the alternative actions to such taking that an applicant considered and the reasons why such alternatives are not being utilized; and (4) other measures that the Service may require as being necessary or appropriate for the purposes of the plan. Issuance criteria for an incidental take permit requires

the Service to find that: (1) The taking will be incidental to otherwise lawful activities; (2) an applicant will, to the maximum extent practicable, minimize and mitigate the impacts of such taking; (3) an applicant has ensured that adequate funding for the plan will be provided; (4) the taking will not appreciably reduce the likelihood of the survival and recovery of the species in the wild; and (5) the measures, if any, we require as necessary or appropriate for the purposes of the plan will be met. Regulations governing permits for endangered and threatened species are at 50 CFR 17.22 and 17.32, respectively.

We expect applicants to request permit coverage for a period of 20 years.

Public Scoping

A primary purpose of the scoping process is to receive suggestions and information on the scope of issues and alternatives to consider when drafting the EIS, and to identify, rather than debate, significant issues related to the proposed action. In order to ensure that we identify a range of issues and alternatives related to the proposed action, we invite comments and suggestions from all interested parties. We will conduct a review of this project according to the requirements of NEPA and its regulations, other relevant Federal laws, regulations, policies, and guidance, and our procedures for compliance with applicable regulations.

We will hold two public scoping meetings: One in Tulsa, at the Oklahoma State University Tulsa Campus, and one in McAlester, Oklahoma. We will provide notices in local newspapers and on the Oklahoma Ecological Services Office Web site, *http://www.fws.gov/southwest/es/Oklahoma/,* with dates, times, and specific locations at least 2 weeks prior to each event. Persons needing reasonable accommodations in order to attend and participate in a public meeting should contact us at the address listed in the **ADDRESSES** section no later than 1 week before the relevant public meeting. Information regarding this proposed action is available in alternative formats upon request.

We will accept oral and written comments at each meeting. You may also submit written comments to the Field Supervisor at the email or U.S. mail addresses in the **ADDRESSES** section, above. Once the draft EIS and draft GCP are completed, there will be further opportunities for public comment on the content of these documents through additional public meetings and a 90-day public comment period.

Alternatives

The proposed action presented in the draft EIS will be compared to the No-Action alternative. The No-Action alternative represents estimated future conditions without the application for, or issuance of, an incidental take permit. No-Action represents the status quo.

No-Action Alternative

Under the no-action alternative, described operators would comply with the Act by avoiding impacts (take) to the ABB where practicable. If take cannot be avoided and there is Federal involvement in the project (for example a Federal permit such as a Corps of Engineers 404 Clean Water Act permit, authorization, or funding exists) an operator or individual may receive take coverage through a biological opinion issued by the Service to the Federal action agency. If there is no Federal involvement in the project operators or individuals can apply for an incidental take permit from the Service. This approach is more time-consuming and less efficient because permits would need to be considered and processed one project at a time. This can result in an isolated independent mitigation approach.

Proposed Alternative

The proposed action is issuance of an incidental take permit for the covered species during construction, operation, and/or maintenance of pipelines or other well field development-related activities. The proposed GCP, which must meet the requirements in section 10(a)(2)(A) of the Act, would be developed in coordination with the Service and implemented by an applicant. This alternative will allow for a comprehensive mitigation approach for authorized impacts and result in a more efficient and timely permit processing effort for the Service and the applicants. Actions covered under the requested incidental take permit may include possible take of covered species associated with activities including, but not limited to, construction, operation, maintenance, repair to pipelines or other well field development related activities.

Forty-three counties are in the proposed permit area, including Adair, Atoka, Bryan, Carter, Cherokee, Choctaw, Cleveland, Coal, Craig, Creek, Delaware, Garfield, Garvin, Haskell, Hughes, Johnston, Latimer, Le Flore, Love, Major, Marshall, Mayes, McClain, McCurtain, McIntosh, Muskogee, Nowata, Okfuskee, Okmulgee, Osage, Ottawa, Pawnee, Pittsburg, Pontotoc, Pottawatomie, Pushmataha, Rogers, Seminole, Sequoyah, Tulsa, Wagoner, and Washington counties in Oklahoma and Lamar and Red River counties in Texas. The species covered under the requested incidental take permit is the ABB. We will be evaluating whether the covered activities will impact other species and whether they should be included on the permit or if management practices can be implemented that are sufficient to avoid take. These species and their legal status include:

- American alligator (*Alligator mississippiensis*)—Threatened (Similarity of Appearance)
- Arkansas darter (*Etheostoma cragini*)—Candidate
- Arkansas River shiner (*Notropis girardi*)—Threatened, Arkansas R. Basin population, with Critical Habitat
- Black-Capped Vireo (*Vireo atricapilla*)—Endangered
- Gray bat (*Myotis grisescens*)—Endangered
- Harperella (*Ptilimnium nodosum*)—Endangered
- Indiana bat (*Myotis sodalis*)—Endangered
- Least tern (*Sterna antillarum*)—Endangered, interior population
- Leopard darter (*Percina pantherina*)—Threatened with Critical Habitat
- Neosho madtom (*Noturus placidus*)—Threatened
- Neosho Mucket (*Lampsilis rafinesqueana*)—Proposed Endangered
- Ouachita Rock pocketbook (*Arkansia wheeleri*)—Endangered
- Ozark Big-Eared bat (*Corynorhinus townsendii ingens*)—Endangered
- Ozark cavefish (*Amblyopsis rosae*)—Threatened
- Piping Plover (*Charadrius melodus*)—Threatened, except Great Lakes watershed population
- Rabbitsfoot (*Quadrula cylindrica* ssp. *cylindrica*)—Proposed Threatened
- Red-Cockaded woodpecker (*Picoides borealis*)—Endangered
- Scaleshell mussel (*Leptodea leptodon*)—Endangered
- Sprague's Pipit (*Anthus spragueii*)—Candidate
- Whooping crane (*Grus americana*)—Endangered, except in the experimental population area
- Winged Mapleleaf (*Quadrula fragosa*)—Endangered; except where listed as experimental populations

We do not anticipate that covered activities will result in take of these species, but we seek comments to help inform our evaluation.

We will also evaluate whether covered activities are likely to impact the unlisted bald eagle (*Haliaeetus*

leucocephalus), which is protected under the *Bald and Golden Eagle Protection Act.*

Other Alternatives

We seek information regarding other reasonable alternatives during this scoping period and will evaluate the impacts associated with such alternatives in the draft EIS.

Public Availability of Comments

Written comments we receive become part of the public record associated with this action. Before including your address, phone number, email address, or other personal identifying information in your comment, you should be aware that the entire comment—including your personal identifying information—may be made publicly available at any time. While you can ask us in your comment to withhold your personal identifying information from public review, we cannot guarantee that we will be able to do so.

Environmental Analysis

The Service will conduct an analysis of the impacts to the ABB and its habitat, and other resources such as vegetation, wetlands, wildlife, geology and soils, air quality, water resources, water quality, cultural resources, land use, recreation, water use, local economy, climate change, and environmental justice resulting from the proposed GCP and other alternatives considered. Following completion of the analysis, the Service will publish a notice of availability and a request for comments on the draft EIS and the draft GCP. The draft EIS and draft GCP are expected to be completed and available to the public in January or February, 2013.

Dated: December 17, 2012.

Joy E. Nicholopoulos,

Acting, Regional Director, Southwest Region, Fish and Wildlife Service.

[FR Doc. 2013–02256 Filed 1–31–13; 8:45 am]

BILLING CODE 4310–55–P

DEPARTMENT OF THE INTERIOR

Fish and Wildlife Service

[FWS–HQ–IA–2013–N024; FXIA16710900000P5–123–FF09A30000]

Endangered Species; Receipt of Applications for Permit

AGENCY: Fish and Wildlife Service, Interior.

ACTION: Notice of receipt of applications for permit.

SUMMARY: We, the U.S. Fish and Wildlife Service, invite the public to comment on the following applications to conduct certain activities with endangered species. With some exceptions, the Endangered Species Act (ESA) prohibits activities with listed species unless Federal authorization is acquired that allows such activities.

DATES: We must receive comments or requests for documents on or before March 4, 2013.

ADDRESSES: Brenda Tapia, Division of Management Authority, U.S. Fish and Wildlife Service, 4401 North Fairfax Drive, Room 212, Arlington, VA 22203; fax (703) 358–2280; or email *DMAFR@fws.gov.*

FOR FURTHER INFORMATION CONTACT: Brenda Tapia, (703) 358–2104 (telephone); (703) 358–2280 (fax); *DMAFR@fws.gov* (email).

SUPPLEMENTARY INFORMATION:

I. Public Comment Procedures

A. How do I request copies of applications or comment on submitted applications?

Send your request for copies of applications or comments and materials concerning any of the applications to the contact listed under **ADDRESSES**. Please include the Federal Register notice publication date, the PRT-number, and the name of the applicant in your request or submission. We will not consider requests or comments sent to an email or address not listed under **ADDRESSES.** If you provide an email address in your request for copies of applications, we will attempt to respond to your request electronically.

Please make your requests or comments as specific as possible. Please confine your comments to issues for which we seek comments in this notice, and explain the basis for your comments. Include sufficient information with your comments to allow us to authenticate any scientific or commercial data you include.

The comments and recommendations that will be most useful and likely to influence agency decisions are: (1) Those supported by quantitative information or studies; and (2) Those that include citations to, and analyses of, the applicable laws and regulations. We will not consider or include in our administrative record comments we receive after the close of the comment period (see **DATES**) or comments delivered to an address other than those listed above (see **ADDRESSES**).

B. May I review comments submitted by others?

Comments, including names and street addresses of respondents, will be available for public review at the street address listed under **ADDRESSES**. The public may review documents and other information applicants have sent in support of the application unless our allowing viewing would violate the Privacy Act or Freedom of Information Act. Before including your address, phone number, email address, or other personal identifying information in your comment, you should be aware that your entire comment—including your personal identifying information—may be made publicly available at any time. While you can ask us in your comment to withhold your personal identifying information from public review, we cannot guarantee that we will be able to do so.

II. Background

To help us carry out our conservation responsibilities for affected species, and in consideration of section 10(a)(1)(A) of the Endangered Species Act of 1973, as amended (16 U.S.C. 1531 *et seq.*), along with Executive Order 13576, ''Delivering an Efficient, Effective, and Accountable Government,'' and the President's Memorandum for the Heads of Executive Departments and Agencies of January 21, 2009—Transparency and Open Government (74 FR 4685; January 26, 2009), which call on all Federal agencies to promote openness and transparency in Government by disclosing information to the public, we invite public comment on these permit applications before final action is taken.

III. Permit Applications

A. Endangered Species

Applicant: Ronald Garison, Ozona, TX; PRT–94067A

The applicant requests a permit authorizing interstate and foreign commerce, export, and cull of excess scimitar-horned oryx (*Oryx dammah*) from the captive herd maintained at their facility, for the purpose of enhancement of the survival of the species. This notification covers activities to be conducted by the applicant over a 5-year period.

Applicant: Montgomery Zoo, Montgomery, AL; PRT–769096

The applicant requests renewal of their captive-bred wildlife registration under 50 CFR 17.21(g) for the following species, to enhance their propagation or survival. This notification covers activities to be conducted by the applicant over a 5-year period.

Species:

Banteng (*Bos javanicus*)
Slender-horned gazelle (*Gazella leptoceros*)
Indian rhinoceros (*Rhinoceros unicornis*)
Eld's deer (*Cervus eldii*)
Cheetah (*Acinonyx jubatus*)
Bengal tiger (*Panthera tigris tigris*)
Maned wolf (*Chrysocyon brachyurus*)
Spectacled bear (*Tremarctos ornatus*)
Andean condor (*Vultur gryphus*)
Galapagos tortoise (*Geochelone nigra*)

Applicant: International Crane Foundation, Baraboo, WI; PRT–691895

The applicant requests renewal of their captive-bred wildlife registration under 50 CFR 17.21(g) for the family Gruidae, to enhance their propagation or survival. This notification covers activities to be conducted by the applicant over a 5-year period.

Applicant: Oklahoma City Zoo, Oklahoma City, OK; PRT–683609

The applicant requests renewal of their captive-bred wildlife registration under 50 CFR 17.21(g) for the following families, genera, and species, to enhance their propagation or survival. This notification covers activities to be conducted by the applicant over a 5-year period.

Families:

Bovidae
Camelidae
Canidae
Cebidae
Cervidae
Equidae
Felidae (does not include jaguar, margay or ocelot)
Hominidae
Hylobatidae
Macropodidae
Manidae
Rhinocerotidae
Suidae
Tapiridae
Ursidae
Accipitridae
Anatidae (does not include Hawaiian duck or Hawaiian goose)
Bucerotidae
Cathartidae
Columbidae
Falconidae
Gruidae
Laridae
Psittacidae (does not include thick-billed parrot)
Rallidae
Strigidae
Struthionidae
Sturnidae (does not include *Aplonis pelzelni*)
Threskiornithidae
Alligatoridae
Boidae (does not include Mona boa or Puerto Rico boa)
Crocodylidae (does not include American crocodile)
Gekkonidae
Testudinidae

Species:

Asian elephant (*Elephas maximus*)

Applicant: Panther Ridge Sanctuary, Wellington, FL; PRT–203027

The applicant requests renewal of their captive-bred wildlife registration under 50 CFR 17.21(g) for the clouded leopard (*Neofelis nebulosa*) to enhance their propagation or survival. This notification covers activities to be conducted by the applicant over a 5-year period.

Applicant: West Coast Game Park, Bandon, OR; PRT–667821

The applicant requests renewal of their captive-bred wildlife registration under 50 CFR 17.21(g) for the following species, to enhance their propagation or survival. This notification covers activities to be conducted by the applicant over a 5-year period.

Species:

Leopard (*Panthera pardus*)
Snow leopard (*Uncia uncia*)

Applicant: Smoky Mountain Zoo, Pigeon Forge, TN; PRT–95036A

The applicant requests a captive-bred wildlife registration under 50 CFR 17.21(g) for the following species, to enhance their propagation or survival. This notification covers activities to be conducted by the applicant over a 5-year period.

Species:

Ring-tailed lemur (*Lemur catta*)
Black and white ruffed lemur (*Varecia variegata*)
Red ruffed lemur (*Varecia rubra*)
Cottontop tamarin (*Saguinus oedipus*)
Barasingha (*Rucervus duvaucelii*)
Scimitar-horned oryx (*Oryx dammah*)
Addax (*Addax nasomaculatus*)
Red lechwe (*Kobus leche*)

Applicant: Larry Johnson, Boerne, TX; PRT–89186A

The applicant requests a permit to export 40 live Arabian oryx (*Oryx leucoryx*) to Environment Agency Abu Dhabi, Abu Dhabi, United Arab Emirates for the purposes of enhancement of the survival of the species.

Brenda Tapia,

Program Analyst/Data Administrator, Branch of Permits, Division of Management Authority.

[FR Doc. 2013–02174 Filed 1–31–13; 8:45 am]

BILLING CODE 4310–55–P

DEPARTMENT OF THE INTERIOR

Bureau of Indian Affairs

Final Environmental Impact Statement for the Proposed Spokane Tribe of Indians West Plains Casino and Mixed Use Project, City of Airway Heights, Spokane County, WA

AGENCY: Bureau of Indian Affairs, Interior.

ACTION: Notice of Availability.

SUMMARY: This notice advises the public that the Bureau of Indian Affairs (BIA) as lead agency, with the Spokane Tribe of Indians (Tribe), National Indian Gaming Commission (NIGC), Washington State Department of Transportation (WSDOT), the City of Airway Heights (City), Spokane County, the Federal Aviation Administration (FAA) and the U.S. Department of the Air force (Air Force) serving as cooperating agencies, intends to file a Final Environmental Impact Statement (FEIS) with the U.S. Environmental Protection Agency (EPA) for the Spokane Tribe of Indians West Plains Casino and Mixed Use Project, City of Airway Heights, Spokane County, Washington, and that the FEIS is now available for public review.

DATES: The Record of Decision on the proposed action will be issued on or after 30 days from the date the EPA publishes its Notice of Availability in the **Federal Register**. Any comments on the FEIS must arrive on or before 30 days following the date the EPA publishes its Notice of Availability in the **Federal Register**.

ADDRESSES: You may mail or hand deliver written comments to Mr. Stanley Speaks, Northwest Regional Director, Bureau of Indian Affairs, Northwest Region, 911 Northeast 11th Avenue, Portland, Oregon 97232.

FOR FURTHER INFORMATION CONTACT: Dr. B.J. Howerton, Bureau of Indian Affairs, Northwest Region, 911 Northeast 11th Avenue, Portland, Oregon 97232; fax (503) 231–2275; phone (503) 231–6749.

SUPPLEMENTARY INFORMATION:

Background: The Tribe has requested that the Secretary of the Interior issue a two-part determination under Section 20 of the Indian Gaming Regulatory Act (IGRA) for Class III gaming on 145 acres held in Federal trust for the Tribe in the City of Airway Heights adjacent to the unincorporated West Plains area of Spokane County, Washington. The project site is located immediately northwest of the intersection of U.S. Highway 2 (S–2) and Craig Road.

The Proposed Project consists of the following components: (1) Issuance of a

two-part determination by the Secretary of the Interior; and (2) development of a casino-resort facility, parking structure, site retail, commercial building, tribal cultural center, and police/fire station within the project site. At full build-out, the proposed casino-resort facility would have approximately 98,442 square-feet of gaming floor and a 300-room hotel. The hotel tower would not exceed 145 feet above ground level. Access to the project site would be provided via three driveways along US–2 and three driveways along Craig Road.

The following alternatives are considered in the FEIS: (1) Proposed Casino and Mixed-Use Development; (2) Reduced Casino and Mixed-Use Development; (3) Non-Gaming Mixed-Use Development; and (4) No Action/No Development. Environmental issues addressed in the FEIS include geology and soils, water resources, air quality, biological resources, cultural and paleontological resources, socioeconomic conditions (including environmental justice), transportation and circulation, land use, public services, noise, hazardous materials, aesthetics, cumulative effects, and indirect and growth inducing effects.

The BIA serves as the Lead Agency for compliance with the National Environmental Policy Act (NEPA). The BIA has afforded other government agencies and the public extensive opportunity to participate in the preparation of the FEIS. The BIA held a public scoping meeting for the project on September 16, 2009, in the City of Airway Heights, Washington. A Notice of Availability for the Draft EIS was published in the **Federal Register** on March 2, 2012 (77 FR 12873) and announced a 45-day review period ending on April 16, 2012. In response to public requests, the BIA published a notice of the reopening of the comment period in the **Federal Register** on April 26, 2012 (77 FR 24976). The extended comment period ended on May 16, 2012. The total comment period for the Draft EIS was 75 days. The BIA held a public hearing on the Draft EIS on March 26, 2012, in the City of Airway Heights.

Directions for Submitting Comments: Please include your name, return address, and the caption: ''FEIS Comments, Spokane Tribe of Indians West Plains Development Project,'' on the first page of your written comments.

Locations where the FEIS is Available for Review: The FEIS will be available for review at the BIA Spokane Agency Office located at Agency Square Road, Building 201, Wellpinit, Washington 99040; the Airway Heights Branch of the Spokane County Library District located at 1213 South Lundstrom Street, Airway Heights, Washington 99001; and the Spokane Public Library located at 906 West Main Street, Spokane, Washington 99201. The FEIS is also available online at: *http://www.westplainseis.com.*

To obtain a compact disk copy of the FEIS, please provide your name and address in writing or by voicemail to Dr. B.J. Howerton, Environmental Protection Specialist, Bureau of Indian Affairs, Northwest Regional Office. Contact information is listed in the **FOR FURTHER INFORMATION CONTACT** section of this notice. Individual paper copies of the FEIS will be provided upon payment of applicable printing expenses by the requestor for the number of copies requested.

Public Comment Availability: Comments, including names and addresses of respondents, will be available for public review at the BIA mailing address shown in the **ADDRESSES** section of this notice, during regular business hours, 8 a.m. to 4:30 p.m., Monday through Friday, except holidays. Before including your address, telephone number, email address, or other personal identifying information in your comment, you should be aware that your entire comment—including your personal identifying information—may be made publicly available at any time. While you can ask us in your comment to withhold your personal identifying information from public review, we cannot guarantee that we will be able to do so.

Authority: This notice is published pursuant to Sec. 1503.1 of the Council of Environmental Quality Regulations (40 CFR parts 1500 through 1508) and Department of the Interior Regulations (43 CFR part 46), implementing the procedural requirements of the NEPA of l969, as amended (42 U.S.C. 4371, et seq.), and is in the exercise of authority delegated to the Assistant Secretary—Indian Affairs by 209 DM 8.

Dated: September 20, 2012.

Donald E. Laverdure,

Assistant Secretary, Indian Affairs.

[FR Doc. 2013–02158 Filed 1–31–13; 8:45 am]

BILLING CODE 4310–W7–P

DEPARTMENT OF THE INTERIOR

National Park Service

[NPS–MWR–MIMI–11876; 1305–726]

Boundary Revision of Minuteman Missile National Historic Site

AGENCY: National Park Service, Interior.

ACTION: Notification of Boundary Revision.

SUMMARY: Notice is hereby given that, pursuant to Section 3(f)(2)(B) of the Act of November 29, 1999 (Pub. L. 106–115, 113 Stat. 1540–1543), the boundary of Minuteman Missile National Historic Site in the State of South Dakota is modified to include two parcels containing approximately 28.65 acres of unimproved land more specifically identified below. The property is owned by the United States of America and presently administered by the United States Forest Service. Through a General Management Plan dated July 2, 2009, the National Park Service determined that these parcels are the appropriate location for a visitor facility and administrative site. The boundary revision is depicted on Map No. 406/80,011A, dated January 14, 2011. The map is available for inspection at the following locations: National Park Service, Midwest Region Land Resources Program Center, 601 Riverfront Drive, Omaha, Nebraska 68102; National Park Service, Department of the Interior, Washington, DC 20240; and at the Office for the Superintendent, Minuteman Missile National Historic Site, 21208 SD Hwy. 240, Philip, South Dakota 57567.

The legal descriptions of the two land parcels being included within Minuteman Missile National Historic Site are as follows: All that certain parcel of land situated in Section 25, Township 2 South, Range 18 East, and Section 30, Township 2 South, Range 19 East, of the Black Hills Meridian, Jackson County, South Dakota, and being more particularly described as follows: Commencing at the Northwest corner of Section 30, Township 2 South, Range 19 East; thence S2°01′56″W, 1619.93 feet along the West section line of said Section 30 to the point of beginning; thence S87°58′04″E, 1189.70 feet; thence S2°01′56″W, 466.70 feet; thence N87°58′04″W, 466.70 feet; thence N2°01′56″E, 366.70 feet; thence N87°58′04″W, 723.00 feet to a point on the section line between Sections 25 and 30, being 1719.93 feet south of the northeast corner of Section 25; thence N87°58′04″W, 33.00 feet; thence S2°01′56″W, 350.07 feet; thence N88°05′47″W, 67.00 feet; thence S2°01′56″W, 570.00 feet to a point on the quarter section line; thence N88°05′47″W, 558.00 feet along said quarter section line; thence N2°01′56″E, 1334.45 feet; thence S88°05′47″E, 625.00 feet; thence S2°01′56″W, 314.38 feet; thence S87°58′04″E, 33.00 feet to the point of beginning. Said Parcel contains 25.00 acres more or less.

ALSO All that part of the Northwest Quarter of the Northwest Quarter of Section 15, Township 2 South, Range 18

East, of the Black Hills Meridian, in Jackson County, South Dakota, described as follows: Beginning at the Northwest corner of Section 15; thence S88°54′52″E, along the north line of said NW ¼ of the NW ¼ of Section 15, a distance of 292.60 feet; thence S01°01′56″W a distance of 542.90 feet; thence N88°54′52″W a distance of 292.60 feet to the west line of said NW ¼ of the NW ¼; thence N01°01′56″E, along said west line, a distance of 542.90 feet to the point of beginning. Said Parcel contains 3.65 acres more or less.

FOR FURTHER INFORMATION CONTACT: Superintendent Ruben Andrade, Minuteman Missile National Historic Site, 21208 SD Hwy. 240, Philip, South Dakota 57567, telephone (605) 433–5552.

DATES: The effective date of this boundary revision is February 1, 2013.

SUPPLEMENTARY INFORMATION: The Act of November 29, 1999 (Pub. L. 106–115, 113 Stat. 1540–1543), authorizes the Secretary to determine the appropriate location for a visitor facility and administrative site for Minuteman Missile National Historic Site, and to modify the boundary to include the selected site. Section 3(e)(1)(C) of the Act further provides that such lands included in the boundary may be acquired by exchange or transfer from another Federal agency.

Dated: December 20, 2012.

Michael T. Reynolds,

Regional Director, Midwest Region.

[FR Doc. 2013–02177 Filed 1–31–13; 8:45 am]

BILLING CODE 4310–MA–P

DEPARTMENT OF THE INTERIOR

National Park Service

[NPS–PWR–PWRO–10060; PPWONRADE2 PMP00E105.YP0000]

Final Environmental Impact Statement for Protecting and Restoring Native Ecosystems by Managing Non-Native Ungulates, Hawaii Volcanoes National Park, HI

AGENCY: National Park Service, Interior.

ACTION: Notice of availability.

SUMMARY: The National Park Service announces the availability of a Final Environmental Impact Statement for Protecting and Restoring Native Ecosystems by Managing Non-Native Ungulates (final plan/EIS) at Hawaii Volcanoes National Park, Hawaii. The final plan/EIS will provide a park-wide framework to systematically guide non-native ungulate management activities in a manner that supports long-term ecosystem protection, supports natural ecosystem recovery and provides desirable conditions for active ecosystem restoration, and supports protection and preservation of cultural resources.

DATES: The National Park Service will execute a Record of Decision (ROD) no sooner than 30 days from the date of publication by the U.S. Environmental Protection Agency of the notice of filing of the final plan/EIS in the **Federal Register.**

ADDRESSES: The final plan/EIS is available in electronic format at *http://parkplanning.nps.gov/havo_ecosystem_feis.* Printed copies of the final plan/EIS are available for viewing at the Hawaii Volcanoes National Park Kīlauea Visitor Center, One Crater Rim Drive, Hawaii National Park, HI 96718, and in local libraries (locations noted on above Web site). A limited number of compact discs (CDs) and printed copies of the final plan/EIS are also available by request. To obtain a copy or for further information, please contact: Rhonda Loh, Chief of Natural Resources Management, P.O. Box 52, Hawaii Volcanoes National Park, HI 96718–0052; (808) 985–6098.

SUPPLEMENTARY INFORMATION: The final plan/EIS responds to, and incorporates where appropriate, agency and public comments received on the draft plan/EIS, which was available for public review from November 18, 2011 to January 20, 2011. Three public meetings were held from December 5 through December 7, 2011 to gather input on the draft plan/EIS. Twenty-six pieces of correspondence were received during the public review period. NPS responses to substantive agency and public comments are provided as Appendix F of the final plan/EIS.

The final plan/EIS evaluates five alternatives for protecting and restoring native ecosystems by managing non-native ungulates. The NPS preferred alternative is ''Alternative D: Comprehensive Management Plan that Maximizes Flexibility of Management Techniques.'' This alternative includes a progression of management phases, monitoring, and considerations for the use of management tools; a population objective of zero non-native ungulates, or as low as practicable, in managed areas; complete boundary fencing for the Kahuku area and the Olaa rainforest; and potential use of localized internal fencing to assist in the control of non-native ungulates. Control techniques would be primarily lethal, but non-lethal techniques could also be considered. Volunteer programs would continue, but modifications would be required for lethal removal programs to meet current NPS practices. When approved, the plan will guide non-native ungulate management in Hawaii Volcanoes National Park for at least the next 15 to 20 years.

Because this is a delegated EIS, the official responsible for the final decision on the plan to protect and restore native ecosystems by managing non-native ungulates is the Regional Director, Pacific West Region, National Park Service. Subsequently, the official responsible for implementation of the approved plan will be the Superintendent, Hawaii Volcanoes National Park.

Dated: May 5, 2012.

Patricia L. Neubacher,

Acting Regional Director, Pacific West Region.

[FR Doc. 2013–01997 Filed 1–31–13; 8:45 am]

BILLING CODE 4312–FF–P

INTERNATIONAL TRADE COMMISSION

[Docket No. 2935]

Certain Fluorescent Reflector Lamps and Products and Components Containing Same; Notice of Receipt of Complaint; Solicitation of Comments Relating to the Public Interest

AGENCY: U.S. International Trade Commission.

ACTION: Notice.

SUMMARY: Notice is hereby given that the U.S. International Trade Commission has received a complaint entitled *Certain Compact Fluorescent Reflector Lamps and Products and Components Containing Same,* DN 2935; the Commission is soliciting comments on any public interest issues raised by the complaint or complainant's filing under section 210.8(b) of the Commission's Rules of Practice and Procedure (19 CFR 210.8(b)).

FOR FURTHER INFORMATION CONTACT: Lisa R. Barton, Acting Secretary to the Commission, U.S. International Trade Commission, 500 E Street SW., Washington, DC 20436, telephone (202) 205–2000. The public version of the complaint can be accessed on the Commission's electronic docket (EDIS) at *http://edis.usitc.gov,* and will be available for inspection during official business hours (8:45 a.m. to 5:15 p.m.) in the Office of the Secretary, U.S. International Trade Commission, 500 E Street SW., Washington, DC 20436, telephone (202) 205–2000.

General information concerning the Commission may also be obtained by accessing its Internet server (*http://www.usitc.gov*). The public record for this investigation may be viewed on the Commission's electronic docket (EDIS) at *http://edis.usitc.gov.* Hearing-impaired persons are advised that information on this matter can be obtained by contacting the Commission's TDD terminal on (202) 205–1810.

SUPPLEMENTARY INFORMATION: The Commission has received a complaint and a submission pursuant to section 210.8(b) of the Commission's Rules of Practice and Procedure filed on behalf of Andrzej Bobel and Neptun Light, Inc. on January 28, 2013. The complaint alleges violations of section 337 of the Tariff Act of 1930 (19 U.S.C. 1337) in the importation into the United States, the sale for importation, and the sale within the United States after importation of certain fluorescent reflector lamps and products and components containing same. The complaint names as respondents Maxlite, Inc. of NJ; Technical Consumer Products, Inc. of OH; Satco Products, Inc. of NY; and Litetronics International, Inc. of IL.

Proposed respondents, other interested parties, and members of the public are invited to file comments, not to exceed five (5) pages in length, inclusive of attachments, on any public interest issues raised by the complaint or section 210.8(b) filing. Comments should address whether issuance of the relief specifically requested by the complainant in this investigation would affect the public health and welfare in the United States, competitive conditions in the United States economy, the production of like or directly competitive articles in the United States, or United States consumers.

In particular, the Commission is interested in comments that:

(i) Explain how the articles potentially subject to the requested remedial orders are used in the United States;

(ii) Identify any public health, safety, or welfare concerns in the United States relating to the requested remedial orders;

(iii) Identify like or directly competitive articles that complainant, its licensees, or third parties make in the United States which could replace the subject articles if they were to be excluded;

(iv) Indicate whether complainant, complainant's licensees, and/or third party suppliers have the capacity to replace the volume of articles potentially subject to the requested exclusion order and/or a cease and desist order within a commercially reasonable time; and

(v) Explain how the requested remedial orders would impact United States consumers.

Written submissions must be filed no later than by close of business, eight calendar days after the date of publication of this notice in the **Federal Register.** There will be further opportunities for comment on the public interest after the issuance of any final initial determination in this investigation.

Persons filing written submissions must file the original document electronically on or before the deadlines stated above and submit 8 true paper copies to the Office of the Secretary by noon the next day pursuant to section 210.4(f) of the Commission's Rules of Practice and Procedure (19 CFR 210.4(f)). Submissions should refer to the docket number (''Docket No. 2935'') in a prominent place on the cover page and/or the first page. (*See* Handbook for Electronic Filing Procedures, *http://www.usitc.gov/secretary/fed_reg_notices/rules/handbook_on_electronic_filing.pdf*). Persons with questions regarding filing should contact the Secretary (202–205–2000).

Any person desiring to submit a document to the Commission in confidence must request confidential treatment. All such requests should be directed to the Secretary to the Commission and must include a full statement of the reasons why the Commission should grant such treatment. *See* 19 CFR 201.6. Documents for which confidential treatment by the Commission is properly sought will be treated accordingly. All nonconfidential written submissions will be available for public inspection at the Office of the Secretary and on EDIS.

This action is taken under the authority of section 337 of the Tariff Act of 1930, as amended (19 U.S.C. 1337), and of sections 201.10 and 210.8(c) of the Commission's Rules of Practice and Procedure (19 CFR 201.10, 210.8(c)).

Issued: January 29, 2013.

By order of the Commission.

Lisa R. Barton,

Acting Secretary to the Commission.

[FR Doc. 2013–02162 Filed 1–31–13; 8:45 am]

BILLING CODE 7020–02–P

INTERNATIONAL TRADE COMMISSION

[Investigation No. 731–TA–739 (Third Review)]

Clad Steel Plate From Japan; Determination

On the basis of the record [1] developed in the subject five-year review, the United States International Trade Commission (Commission) determines, pursuant to section 751(c) of the Tariff Act of 1930 (19 U.S.C. 1675(c)), that revocation of the antidumping duty order on clad steel plate from Japan would be likely to lead to continuation or recurrence of material injury to an industry in the United States within a reasonably foreseeable time.[2]

Background

The Commission instituted this review on February 1, 2012 (77 FR 5052) and determined on May 7, 2012 that it would conduct a full review (77 FR 37439, June 21, 2012). Notice of the scheduling of the Commission's review and of a public hearing to be held in connection therewith was given by posting copies of the notice in the Office of the Secretary, U.S. International Trade Commission, Washington, DC, and by publishing the notice in the **Federal Register** on June 29, 2012 (77 FR 38825). The hearing was held in Washington, DC, on December 6, 2012, and all persons who requested the opportunity were permitted to appear in person or by counsel.

The Commission transmitted its determination in this review to the Secretary of Commerce on January 28, 2013. The views of the Commission are contained in USITC Publication 4370 (January 2013), entitled *Clad Steel Plate from Japan: Investigation No. 731–TA–739 (Third Review).*

Issued: January 28, 2013.

By order of the Commission.

Lisa R. Barton,

Acting Secretary to the Commission.

[FR Doc. 2013–02145 Filed 1–31–13; 8:45 am]

BILLING CODE 7020–02–P

[1] The record is defined in sec. 207.2(f) of the Commission's Rules of Practice and Procedure (19 CFR 207.2(f)).

[2] Commissioners Pearson and Broadbent dissenting.

INTERNATIONAL TRADE COMMISSION

[Investigation Nos. 701–TA–487 and 731–TA–1198 (Final)]

Steel Wire Garment Hangers From Vietnam; Determinations

On the basis of the record [1] developed in the subject investigations, the United States International Trade Commission (Commission) determines, pursuant to sections 705(b) and 735(b) of the Tariff Act of 1930 (19 U.S.C. 1671d(b)) and (19 U.S.C. 1673d(b)) (the Act), that an industry in the United States is materially injured by reason of imports of steel wire garment hangers from Vietnam, provided for in subheading 7326.20.00 of the Harmonized Tariff Schedule of the United States, that the U.S. Department of Commerce has determined are subsidized and sold in the United States at less than fair value (''LTFV'').[2]

Background

The Commission instituted these investigations effective December 29, 2011, following receipt of a petition filed with the Commission and Commerce by M&B Metal Products Company, Inc., Leeds, AL; Innovative Fabrication LLC/Indy Hanger, Indianapolis, IN; and US Hanger Company LLC, Gardena, CA. The final phase of the investigations was scheduled by the Commission following notification of preliminary determinations by Commerce that imports of steel wire garment hangers from Vietnam were subsidized within the meaning of section 703(b) of the Act (19 U.S.C. 1671b(b)) and dumped within the meaning of 733(b) of the Act (19 U.S.C. 1673b(b)). Notice of the scheduling of the final phase of the Commission's investigations and of a public hearing to be held in connection therewith was given by posting copies of the notice in the Office of the Secretary, U.S. International Trade Commission, Washington, DC, and by publishing the notice in the **Federal Register** on August 20, 2012 (77 FR 50160) and on August 22, 2012 (77 FR 50713, corrected). The hearing was held in Washington, DC, on October 24, 2012, and all persons who requested the opportunity were permitted to appear in person or by counsel.

The Commission transmitted its determinations in these investigations to the Secretary of Commerce on January 28, 2013. The views of the Commission are contained in USITC Publication 4371 (January 2013), entitled *Steel Wire Garment Hangers from Vietnam: Investigation Nos. 701–TA–487 and 731–TA–1198 (Final).*

Issued: January 28, 2013.

By order of the Commission.

Lisa R. Barton,

Acting Secretary to the Commission.

[FR Doc. 2013–02144 Filed 1–31–13; 8:45 am]

BILLING CODE 7020–02–P

[1] The record is defined in sec. 207.2(f) of the Commission's Rules of Practice and Procedure (19 CFR 207.2(f)).

[2] All six Commissioners voted in the affirmative. The Commission also finds that imports subject to Commerce's affirmative critical circumstances determinations are not likely to undermine seriously the remedial effects of the countervailing and antidumping duty orders on steel wire garment hangers from Vietnam.

INTERNATIONAL TRADE COMMISSION

[Investigation No. 731–TA–1110 (Review)]

Sodium Hexametaphosphate From China: Institution of a Five-Year Review Concerning the Antidumping Duty Order on Sodium Hexametaphosphate From China

AGENCY: United States International Trade Commission.

ACTION: Notice.

SUMMARY: The Commission hereby gives notice that it has instituted a review pursuant to section 751(c) of the Tariff Act of 1930 (19 U.S.C. 1675(c)) (the Act) to determine whether revocation of the antidumping duty order on sodium hexametaphosphate from China would be likely to lead to continuation or recurrence of material injury. Pursuant to section 751(c)(2) of the Act, interested parties are requested to respond to this notice by submitting the information specified below to the Commission; [1] to be assured of consideration, the deadline for responses is March 4, 2013. Comments on the adequacy of responses may be filed with the Commission by April 16, 2013. For further information concerning the conduct of this review and rules of general application, consult the Commission's Rules of Practice and Procedure, part 201, subparts A through E (19 CFR part 201), and part 207, subparts A, D, E, and F (19 CFR part 207), as most recently amended at 74 FR 2847 (January 16, 2009).

DATES: *Effective Date:* February 1, 2013.

FOR FURTHER INFORMATION CONTACT: Mary Messer (202–205–3193), Office of Investigations, U.S. International Trade Commission, 500 E Street SW., Washington, DC 20436. Hearing-impaired persons can obtain information on this matter by contacting the Commission's TDD terminal on 202–205–1810. Persons with mobility impairments who will need special assistance in gaining access to the Commission should contact the Office of the Secretary at 202–205–2000. General information concerning the Commission may also be obtained by accessing its internet server (*http://www.usitc.gov*). The public record for this review may be viewed on the Commission's electronic docket (EDIS) at *http://edis.usitc.gov.*

SUPPLEMENTARY INFORMATION:

Background.—On March 19, 2008, the Department of Commerce issued an antidumping duty order on imports of sodium hexametaphosphate from China (73 FR 14772). The Commission is conducting a review to determine whether revocation of the order would be likely to lead to continuation or recurrence of material injury to the domestic industry within a reasonably foreseeable time. It will assess the adequacy of interested party responses to this notice of institution to determine whether to conduct a full review or an expedited review. The Commission's determination in any expedited review will be based on the facts available, which may include information provided in response to this notice.

Definitions.—The following definitions apply to this review:

(1) *Subject Merchandise* is the class or kind of merchandise that is within the scope of the five-year review, as defined by the Department of Commerce.

(2) The *Subject Country* in this review is China.

(3) The *Domestic Like Product* is the domestically produced product or products which are like, or in the absence of like, most similar in characteristics and uses with, the *Subject Merchandise.* In its original determination, the Commission defined a single *Domestic Like Product* consisting of sodium hexametaphosphate, in all grades, chain lengths, and particle sizes, coextensive with the scope of investigation.

(4) The *Domestic Industry* is the U.S. producers as a whole of the *Domestic Like Product,* or those producers whose collective output of the *Domestic Like Product* constitutes a major proportion

[1] No response to this request for information is required if a currently valid Office of Management and Budget (OMB) number is not displayed; the OMB number is 3117–0016/USITC No. 13–5–281, expiration date June 30, 2014. Public reporting burden for the request is estimated to average 15 hours per response. Please send comments regarding the accuracy of this burden estimate to the Office of Investigations, U.S. International Trade Commission, 500 E Street SW., Washington, DC 20436.

of the total domestic production of the product. In its original determination, the Commission defined a single *Domestic Industry* consisting of all domestic producers of sodium hexametaphosphate.

(5) The *Order Date* is the date that the antidumping duty order under review became effective. In this review, the *Order Date* is March 19, 2008.

(6) An *Importer* is any person or firm engaged, either directly or through a parent company or subsidiary, in importing the *Subject Merchandise* into the United States from a foreign manufacturer or through its selling agent.

Participation in the review and public service list.—Persons, including industrial users of the *Subject Merchandise* and, if the merchandise is sold at the retail level, representative consumer organizations, wishing to participate in the review as parties must file an entry of appearance with the Secretary to the Commission, as provided in section 201.11(b)(4) of the Commission's rules, no later than 21 days after publication of this notice in the **Federal Register**. The Secretary will maintain a public service list containing the names and addresses of all persons, or their representatives, who are parties to the review.

Former Commission employees who are seeking to appear in Commission five-year reviews are advised that they may appear in a review even if they participated personally and substantially in the corresponding underlying original investigation. The Commission's designated agency ethics official has advised that a five-year review is not considered the ''same particular matter'' as the corresponding underlying original investigation for purposes of 18 U.S.C. 207, the post employment statute for Federal employees, and Commission rule 201.15(b) (19 CFR 201.15(b)), 73 FR 24609 (May 5, 2008). This advice was developed in consultation with the Office of Government Ethics. Consequently, former employees are not required to seek Commission approval to appear in a review under Commission rule 19 CFR 201.15, even if the corresponding underlying original investigation was pending when they were Commission employees. For further ethics advice on this matter, contact Carol McCue Verratti, Deputy Agency Ethics Official, at 202–205–3088.

Limited disclosure of business proprietary information (BPI) under an administrative protective order (APO) and APO service list.—Pursuant to section 207.7(a) of the Commission's rules, the Secretary will make BPI submitted in this review available to authorized applicants under the APO issued in the review, provided that the application is made no later than 21 days after publication of this notice in the **Federal Register**. Authorized applicants must represent interested parties, as defined in 19 U.S.C. 1677(9), who are parties to the review. A separate service list will be maintained by the Secretary for those parties authorized to receive BPI under the APO.

Certification.—Pursuant to section 207.3 of the Commission's rules, any person submitting information to the Commission in connection with this review must certify that the information is accurate and complete to the best of the submitter's knowledge. In making the certification, the submitter will be deemed to consent, unless otherwise specified, for the Commission, its employees, and contract personnel to use the information provided in any other reviews or investigations of the same or comparable products which the Commission conducts under Title VII of the Act, or in internal audits and investigations relating to the programs and operations of the Commission pursuant to 5 U.S.C. Appendix 3.

Written submissions.—Pursuant to section 207.61 of the Commission's rules, each interested party response to this notice must provide the information specified below. The deadline for filing such responses is March 4, 2013. Pursuant to section 207.62(b) of the Commission's rules, eligible parties (as specified in Commission rule 207.62(b)(1)) may also file comments concerning the adequacy of responses to the notice of institution and whether the Commission should conduct an expedited or full review. The deadline for filing such comments is April 16, 2013. All written submissions must conform with the provisions of sections 201.8 and 207.3 of the Commission's rules and any submissions that contain BPI must also conform with the requirements of sections 201.6 and 207.7 of the Commission's rules. Please be aware that the Commission's rules with respect to electronic filing have been amended. The amendments took effect on November 7, 2011. See 76 FR 61937 (Oct. 6, 2011) and the newly revised Commission's Handbook on E-Filing, available on the Commission's Web site at *http://edis.usitc.gov.* Also, in accordance with sections 201.16(c) and 207.3 of the Commission's rules, each document filed by a party to the review must be served on all other parties to the review (as identified by either the public or APO service list as appropriate), and a certificate of service must accompany the document (if you are not a party to the review you do not need to serve your response).

Inability to provide requested information.—Pursuant to section 207.61(c) of the Commission's rules, any interested party that cannot furnish the information requested by this notice in the requested form and manner shall notify the Commission at the earliest possible time, provide a full explanation of why it cannot provide the requested information, and indicate alternative forms in which it can provide equivalent information. If an interested party does not provide this notification (or the Commission finds the explanation provided in the notification inadequate) and fails to provide a complete response to this notice, the Commission may take an adverse inference against the party pursuant to section 776(b) of the Act in making its determination in the review.

Information to be Provided in Response to this Notice of Institution: As used below, the term ''firm'' includes any related firms.

(1) The name and address of your firm or entity (including World Wide Web address) and name, telephone number, fax number, and Email address of the certifying official.

(2) A statement indicating whether your firm/entity is a U.S. producer of the *Domestic Like Product,* a U.S. union or worker group, a U.S. importer of the *Subject Merchandise,* a foreign producer or exporter of the *Subject Merchandise,* a U.S. or foreign trade or business association, or another interested party (including an explanation). If you are a union/worker group or trade/business association, identify the firms in which your workers are employed or which are members of your association.

(3) A statement indicating whether your firm/entity is willing to participate in this review by providing information requested by the Commission.

(4) A statement of the likely effects of the revocation of the antidumping duty order on the *Domestic Industry* in general and/or your firm/entity specifically. In your response, please discuss the various factors specified in section 752(a) of the Act (19 U.S.C. 1675a(a)) including the likely volume of subject imports, likely price effects of subject imports, and likely impact of imports of *Subject Merchandise* on the *Domestic Industry.*

(5) A list of all known and currently operating U.S. producers of the *Domestic Like Product.* Identify any known related parties and the nature of the relationship as defined in section

771(4)(B) of the Act (19 U.S.C. 1677(4)(B)).

(6) A list of all known and currently operating U.S. importers of the *Subject Merchandise* and producers of the *Subject Merchandise* in the *Subject Country* that currently export or have exported *Subject Merchandise* to the United States or other countries since the *Order Date.*

(7) A list of 3–5 leading purchasers in the U.S. market for the *Domestic Like Product* and the *Subject Merchandise* (including street address, World Wide Web address, and the name, telephone number, fax number, and Email address of a responsible official at each firm).

(8) A list of known sources of information on national or regional prices for the *Domestic Like Product* or the *Subject Merchandise* in the U.S. or other markets.

(9) If you are a U.S. producer of the *Domestic Like Product,* provide the following information on your firm's operations on that product during calendar year 2012, except as noted (report quantity data in metric tons and value data in U.S. dollars, f.o.b. plant). If you are a union/worker group or trade/business association, provide the information, on an aggregate basis, for the firms in which your workers are employed/which are members of your association.

(a) Production (quantity) and, if known, an estimate of the percentage of total U.S. production of the *Domestic Like Product* accounted for by your firm's(s') production;

(b) Capacity (quantity) of your firm to produce the *Domestic Like Product* (i.e., the level of production that your establishment(s) could reasonably have expected to attain during the year, assuming normal operating conditions (using equipment and machinery in place and ready to operate), normal operating levels (hours per week/weeks per year), time for downtime, maintenance, repair, and cleanup, and a typical or representative product mix);

(c) The quantity and value of U.S. commercial shipments of the *Domestic Like Product* produced in your U.S. plant(s);

(d) The quantity and value of U.S. internal consumption/company transfers of the *Domestic Like Product* produced in your U.S. plant(s); and

(e) The value of (i) net sales, (ii) cost of goods sold (COGS), (iii) gross profit, (iv) selling, general and administrative (SG&A) expenses, and (v) operating income of the *Domestic Like Product* produced in your U.S. plant(s) (include both U.S. and export commercial sales, internal consumption, and company transfers) for your most recently completed fiscal year (identify the date on which your fiscal year ends).

(10) If you are a U.S. importer or a trade/business association of U.S. importers of the *Subject Merchandise* from the *Subject Country,* provide the following information on your firm's(s') operations on that product during calendar year 2012 (report quantity data in metric tons and value data in U.S. dollars). If you are a trade/business association, provide the information, on an aggregate basis, for the firms which are members of your association.

(a) The quantity and value (landed, duty-paid but not including antidumping duties) of U.S. imports and, if known, an estimate of the percentage of total U.S. imports of *Subject Merchandise* from the *Subject Country* accounted for by your firm's(s') imports;

(b) The quantity and value (f.o.b. U.S. port, including antidumping duties) of U.S. commercial shipments of *Subject Merchandise* imported from the *Subject Country;* and

(c) The quantity and value (f.o.b. U.S. port, including antidumping duties) of U.S. internal consumption/company transfers of *Subject Merchandise* imported from the *Subject Country.*

(11) If you are a producer, an exporter, or a trade/business association of producers or exporters of the *Subject Merchandise* in the *Subject Country,* provide the following information on your firm's(s') operations on that product during calendar year 2012 (report quantity data in metric tons and value data in U.S. dollars, landed and duty-paid at the U.S. port but not including antidumping duties). If you are a trade/business association, provide the information, on an aggregate basis, for the firms which are members of your association.

(a) Production (quantity) and, if known, an estimate of the percentage of total production of *Subject Merchandise* in the *Subject Country* accounted for by your firm's(s') production;

(b) Capacity (quantity) of your firm(s) to produce the *Subject Merchandise* in the *Subject Country* (i.e., the level of production that your establishment(s) could reasonably have expected to attain during the year, assuming normal operating conditions (using equipment and machinery in place and ready to operate), normal operating levels (hours per week/weeks per year), time for downtime, maintenance, repair, and cleanup, and a typical or representative product mix); and

(c) The quantity and value of your firm's(s') exports to the United States of *Subject Merchandise* and, if known, an estimate of the percentage of total exports to the United States of *Subject Merchandise* from the *Subject Country* accounted for by your firm's(s') exports.

(12) Identify significant changes, if any, in the supply and demand conditions or business cycle for the *Domestic Like Product* that have occurred in the United States or in the market for the *Subject Merchandise* in the *Subject Country* since the *Order Date,* and significant changes, if any, that are likely to occur within a reasonably foreseeable time. Supply conditions to consider include technology; production methods; development efforts; ability to increase production (including the shift of production facilities used for other products and the use, cost, or availability of major inputs into production); and factors related to the ability to shift supply among different national markets (including barriers to importation in foreign markets or changes in market demand abroad). Demand conditions to consider include end uses and applications; the existence and availability of substitute products; and the level of competition among the *Domestic Like Product* produced in the United States, *Subject Merchandise* produced in the *Subject Country,* and such merchandise from other countries.

(13) (OPTIONAL) A statement of whether you agree with the above definitions of the *Domestic Like Product* and *Domestic Industry;* if you disagree with either or both of these definitions, please explain why and provide alternative definitions.

Authority: This review is being conducted under authority of Title VII of the Tariff Act of 1930; this notice is published pursuant to section 207.61 of the Commission's rules.

By order of the Commission.

Issued: January 29, 2013.

Lisa R. Barton,

Acting Secretary to the Commission.

[FR Doc. 2013–02161 Filed 1–31–13; 8:45 am]

BILLING CODE 7020–02–P

INTERNATIONAL TRADE COMMISSION

[USITC SE–13–005]

Government In the Sunshine Act Meeting Notice

AGENCY HOLDING THE MEETING: United States International Trade Commission.

TIME AND DATE: February 7, 2013 at 11:00 a.m.

PLACE: Room 101, 500 E Street SW., Washington, DC 20436, Telephone: (202) 205–2000.

STATUS: Open to the public.

MATTERS TO BE CONSIDERED:

1. Agendas for future meetings: None.
2. Minutes.
3. Ratification List.
4. Vote in Inv. Nos. 701–TA–491–497 (Preliminary) (Frozen Warmwater Shrimp from China, Ecuador, India, Indonesia, Malaysia, Thailand, and Vietnam). The Commission is currently scheduled to transmit its determinations to the Secretary of Commerce on or before February 11, 2013; Commissioners' opinions are currently scheduled to be transmitted to the Secretary of Commerce on or before February 19, 2013.
5. Outstanding action jackets: None.

In accordance with Commission policy, subject matter listed above, not disposed of at the scheduled meeting, may be carried over to the agenda of the following meeting.

By order of the Commission.

Issued: January 29, 2013.

William R. Bishop,

Supervisory Hearings and Information Officer.

[FR Doc. 2013–02366 Filed 1–30–13; 4:15 pm]

BILLING CODE 7020–02–P

INTERNATIONAL TRADE COMMISSION

[USITC SE–13–006]

Government In the Sunshine Act Meeting Notice

AGENCY HOLDING THE MEETING: United States International Trade Commission.

TIME AND DATE: February 8, 2013 at 11:00 a.m.

PLACE: Room 101, 500 E Street S.W., Washington, DC 20436, Telephone: (202) 205–2000.

STATUS: Open to the public.

MATTERS TO BE CONSIDERED:

1. Agendas for future meetings: None.
2. Minutes.
3. Ratification List.
4. Vote in Inv. No. 731–TA–1103 (Review) (Activated Carbon from China). The Commission is currently scheduled to transmit its determination and Commissioners' opinions to the Secretary of Commerce on or before February 22, 2013.
5. Outstanding action jackets: None.

In accordance with Commission policy, subject matter listed above, not disposed of at the scheduled meeting, may be carried over to the agenda of the following meeting.

By order of the Commission.

Issued: January 30, 2013.

William R. Bishop,

Supervisory Hearings and Information Officer.

[FR Doc. 2013–02374 Filed 1–30–13; 4:15 pm]

BILLING CODE 7020–02–P

DEPARTMENT OF JUSTICE

Antitrust Division

Notice Pursuant to the National Cooperative Research and Production Act of 1993—Advanced Media Workflow Association, Inc.

Notice is hereby given that, on December 26, 2012, pursuant to Section 6(a) of the National Cooperative Research and Production Act of 1993, 15 U.S.C. 4301 *et seq.* (''the Act''), Advanced Media Workflow Association, Inc. has filed written notifications simultaneously with the Attorney General and the Federal Trade Commission disclosing changes in its membership. The notifications were filed for the purpose of extending the Act's provisions limiting the recovery of antitrust plaintiffs to actual damages under specified circumstances. Specifically, DG, Irving, TX; Laurence Cook (individual member), Portland, OR; and William Garrett (individual member), Sydney, AUSTRALIA, have been added as parties to this venture. Also, VRT, Gent-Ledeberg, BELGIUM; and Thomas Adamich (individual member), New Philadelphia, OH, have withdrawn as parties to this venture.

No other changes have been made in either the membership or planned activity of the group research project. Membership in this group research project remains open, and Advanced Media Workflow Association, Inc. intends to file additional written notifications disclosing all changes in membership.

On March 28, 2000, Advanced Media Workflow Association, Inc. filed its original notification pursuant to Section 6(a) of the Act. The Department of Justice published a notice in the **Federal Register** pursuant to Section 6(b) of the Act on June 29, 2000 (65 FR 40127).

The last notification was filed with the Department on September 24, 2012. A notice was published in the **Federal Register** pursuant to Section 6(b) of the Act on October 18, 2012 (77 FR 64128).

Patricia A. Brink,

Director of Civil Enforcement, Antitrust Division.

[FR Doc. 2013–02197 Filed 1–31–13; 8:45 am]

BILLING CODE P

DEPARTMENT OF JUSTICE

Antitrust Division

Notice Pursuant to the National Cooperative Research and Production Act of 1993—Heterogeneous System Architecture Foundation

Notice is hereby given that, on December 28, 2012, pursuant to Section 6(a) of the National Cooperative Research and Production Act of 1993, 15 U.S.C. 4301 *et seq.* (''the Act''), Heterogeneous System Architecture Foundation (''HSA Foundation'') has filed written notifications simultaneously with the Attorney General and the Federal Trade Commission disclosing changes in its membership. The notifications were filed for the purpose of extending the Act's provisions limiting the recovery of antitrust plaintiffs to actual damages under specified circumstances. Specifically, System Software Lab National Tsing Hua University, Hsinchu, Taiwan, PEOPLE'S REPUBLIC OF CHINA; Digital Media Professionals (''DMP''), Nakacho, Musashino-shi, Tokyo, JAPAN; National Tsing Hua University, Hsinchu, Taiwan, PEOPLE'S REPUBLIC OF CHINA; Ceva Inc., Mountain View, CA; Tensilica Inc., Santa Clara, CA; STMicroelectronics International, Amsterdam, THE NETHERLANDS; University of Illinois, Champaign, IL; University of Edinburgh, Edinburgh, SCOTLAND; University of Bristol Microelectronic Research Group, Bristol, UNITED KINGDOM; and CodePlay Software Ltd., Edinburgh, SCOTLAND, have been added as parties to this venture.

No other changes have been made in either the membership or planned activity of the group research project. Membership in this group research project remains open, and HSA Foundation intends to file additional written notifications disclosing all changes in membership.

On August 31, 2012, HSA Foundation filed its original notification pursuant to Section 6(a) of the Act. The Department of Justice published a notice in the **Federal Register** pursuant to Section 6(b) of the Act on October 11, 2012 (77 FR 61786).

The last notification was filed with the Department on October 9, 2012. A notice was published in the **Federal Register** pursuant to Section 6(b) of the Act on November 6, 2012 (77 FR 66636).

Patricia A. Brink,

Director of Civil Enforcement, Antitrust Division.

[FR Doc. 2013–02203 Filed 1–31–13; 8:45 am]

BILLING CODE P

DEPARTMENT OF JUSTICE

Antitrust Division

Notice Pursuant to the National Cooperative Research and Production Act of 1993—IMS Global Learning Consortium, Inc.

Notice is hereby given that, on December 28, 2012, pursuant to Section 6(a) of the National Cooperative Research and Production Act of 1993, 15 U.S.C. 4301 *et seq.* (''the Act''), IMS Global Learning Consortium, Inc. (''IMS Global'') has filed written notifications simultaneously with the Attorney General and the Federal Trade Commission disclosing changes in its membership. The notifications were filed for the purpose of extending the Act's provisions limiting the recovery of antitrust plaintiffs to actual damages under specified circumstances. Specifically, Center for Educational Testing and Evaluation, University of Kansas, Lawrence, KS; Indian River School District, Selbyville, DE; learning.com, Portland, OR; State of Michigan Dept. of Education, Bureau of Assessment and Accountability, Lansing, MI; State of Wisconsin Dept. of Public Instruction, Madison, WI; and World-Class Instructional Design and Assessment WIDA, Madison, WI, have been added as parties to this venture.

Also, Wisconsin Virtual School, Tomahawk, WI; Hanyang Cyber University (HYCU), Seoul, REPUBLIC OF KOREA; Touro University Worldwide, Westlake Village, CA; and Ubion Co., Ltd., Seoul, REPUBLIC OF KOREA, have withdrawn as parties to this venture.

No other changes have been made in either the membership or planned activity of the group research project. Membership in this group research project remains open, and IMS Global intends to file additional written notifications disclosing all changes in membership.

On April 7, 2000, IMS Global filed its original notification pursuant to Section 6(a) of the Act. The Department of Justice published a notice in the **Federal Register** pursuant to Section 6(b) of the Act on September 13, 2000 (65 FR 55283).

The last notification was filed with the Department on October 9, 2012. A notice was published in the **Federal Register** pursuant to Section 6(b) of the Act on November 6, 2012 (77 FR 66635).

Patricia A. Brink,

Director of Civil Enforcement, Antitrust Division.

[FR Doc. 2013–02202 Filed 1–31–13; 8:45 am]

BILLING CODE P

DEPARTMENT OF LABOR

Office of the Secretary

Agency Information Collection Activities; Submission for OMB Review; Comment Request; Hexavalent Chromium Standards for General Industry, Shipyard Employment, and Construction

ACTION: Notice.

SUMMARY: On January 31, 2013, the Department of Labor (DOL) will submit the Occupational Safety and Health Administration (OSHA) sponsored information collection request (ICR) titled, ''Hexavalent Chromium Standards for General Industry, Shipyard Employment, and Construction,'' to the Office of Management and Budget (OMB) for review and approval for continued use in accordance with the Paperwork Reduction Act (PRA) of 1995 (44 U.S.C. 3501 et seq.).

DATES: Submit comments on or before March 4, 2013.

ADDRESSES: A copy of this ICR with applicable supporting documentation; including a description of the likely respondents, proposed frequency of response, and estimated total burden may be obtained from the RegInfo.gov Web site, *http://www.reginfo.gov/public/do/PRAMain,* on February 1, 2013, or by contacting Michel Smyth by telephone at 202–693–4129 (this is not a toll-free number) or sending an email to *DOL_PRA_PUBLIC@dol.gov.*

Submit comments about this request to the Office of Information and Regulatory Affairs, Attn: OMB Desk Officer for DOL–OSHA, Office of Management and Budget, Room 10235, 725 17th Street NW., Washington, DC 20503, Fax: 202–395–6881 (this is not a toll-free number), email: *OIRA_submission@omb.eop.gov.*

FOR FURTHER INFORMATION CONTACT: Michel Smyth by telephone at 202–693–4129 (this is not a toll-free number) or by email at *DOL_PRA_PUBLIC@dol.gov.*

Authority: 44 U.S.C. 3507(a)(1)(D).

SUPPLEMENTARY INFORMATION: The Hexavalent Chromium standards for general industry, shipyard employment, and construction require employers to monitor employee exposure to hexavalent chromium, to provide medical surveillance, and to establish and maintain accurate records of employee exposure to hexavalent chromium and employee medical records. Employers, employees, physicians, and the Government use these records to ensure that exposure to chromium does not harm employees.

This information collection is subject to the PRA. A Federal agency generally cannot conduct or sponsor a collection of information, and the public is generally not required to respond to an information collection, unless it is approved by the OMB under the PRA and displays a currently valid OMB Control Number. In addition, notwithstanding any other provisions of law, no person shall generally be subject to penalty for failing to comply with a collection of information that does not display a valid Control Number. *See* 5 CFR 1320.5(a) and 1320.6. The DOL obtains OMB approval for this information collection under Control Number 1218–0252. The current approval is scheduled to expire on January 31, 2013; however, it should be noted that existing information collection requirements submitted to the OMB receive a month-to-month extension while they undergo review. For additional information, see the related notice published in the **Federal Register** on October 9, 2012.

Interested parties are encouraged to send comments to the OMB, Office of Information and Regulatory Affairs at the address shown in the **ADDRESSES** section by March 4, 2013. In order to help ensure appropriate consideration, comments should mention OMB Control Number 1218–0252. The OMB is particularly interested in comments that:

- Evaluate whether the proposed collection of information is necessary for the proper performance of the functions of the agency, including whether the information will have practical utility;
- Evaluate the accuracy of the agency's estimate of the burden of the proposed collection of information, including the validity of the methodology and assumptions used;
- Enhance the quality, utility, and clarity of the information to be collected; and
- Minimize the burden of the collection of information on those who are to respond, including through the use of appropriate automated, electronic, mechanical, or other technological collection techniques or other forms of information technology, e.g., permitting electronic submission of responses.

Agency: DOL–OSHA.

Title of Collection: Hexavalent Chromium Standards for General Industry, Shipyard Employment, and Construction.

OMB Control Number: 1218–0252.

Affected Public: Private Sector-businesses or other for-profits.

Total Estimated Number of Respondents: 77,770.

Total Estimated Number of Responses: 1,086,560.

Total Estimated Annual Burden Hours: 541,582.

Total Estimated Annual Other Costs Burden: $46,589,912.

Dated: January 25, 2013.

Michel Smyth,

Departmental Clearance Officer.

[FR Doc. 2013–02134 Filed 1–31–13; 8:45 am]

BILLING CODE 4510–26–P

DEPARTMENT OF LABOR

Office of the Secretary

Agency Information Collection Activities; Submission for OMB Review; Comment Request; Notice of Medical Necessity Criteria Under the Mental Health Parity and Addiction Equity Act of 2008

ACTION: Notice.

SUMMARY: On January 31, 2013, the Department of Labor (DOL) will submit the Employee Benefits Security Administration (EBSA) sponsored information collection request (ICR) titled, ''Notice of Medical Necessity Criteria under the Mental Health Parity and Addiction Equity Act of 2008,'' to the Office of Management and Budget (OMB) for review and approval for continued use in accordance with the Paperwork Reduction Act (PRA) of 1995 (44 U.S.C. 3501 *et seq.*).

DATES: Submit comments on or before March 4, 2013.

ADDRESSES: A copy of this ICR with applicable supporting documentation; including a description of the likely respondents, proposed frequency of response, and estimated total burden may be obtained from the RegInfo.gov Web site, *http://www.reginfo.gov/public/do/PRAMain*, on February 1, 2013, or by contacting Michel Smyth by telephone at 202–693–4129 (this is not a toll-free number) or sending an email to *DOL_PRA_PUBLIC@dol.gov*.

Submit comments about this request to the Office of Information and Regulatory Affairs, Attn: OMB Desk Officer for DOL–EBSA, Office of Management and Budget, Room 10235, 725 17th Street NW., Washington, DC 20503, Fax: 202–395–6881 (this is not a toll-free number), email: *OIRA_submission@omb.eop.gov*.

FOR FURTHER INFORMATION CONTACT: Michel Smyth by telephone at 202–693–4129 (this is not a toll-free number) or by email at *DOL_PRA_PUBLIC@dol.gov*.

Authority: 44 U.S.C. 3507(a)(1)(D).

SUPPLEMENTARY INFORMATION: The Paul Wellstone and Pete Domenici Mental Health Parity and Addiction Equity Act of 2008 (MHPAEA), Public Law 110–343 Division C, amends the Employee Retirement Income Security Act of 1974 (ERISA), the Public Health Service Act (PHS Act), and the Internal Revenue Code of 1986 (Code). In 1996, Congress enacted the Mental Health Parity Act of 1996, which required parity in aggregate lifetime and annual dollar limits for mental health benefits and medical and surgical benefits. Those mental health parity provisions and the changes the MHPAEA made are codified in ERISA section 712, PHS Act section 2705, and Code section 9812. The MHPAEA and regulations 29 CFR 2590.712(d) require a covered plan administrator to disclose the criteria for medical necessity determinations with respect to mental health and substance use disorder benefits. These third-party disclosures are information collections subject to the PRA.

A Federal agency generally cannot conduct or sponsor a collection of information, and the public is generally not required to respond to an information collection, unless it is approved by the OMB under the PRA and displays a currently valid OMB Control Number. In addition, notwithstanding any other provisions of law, no person shall generally be subject to penalty for failing to comply with a collection of information that does not display a valid Control Number. *See* 5 CFR 1320.5(a) and 1320.6. The DOL obtains OMB approval for this information collection under Control Number 1210–0138. The current approval is scheduled to expire on January 31, 2013; however, it should be noted that existing information collection requirements submitted to the OMB receive a month-to-month extension while they undergo review. For additional information, see the related notice published in the **Federal Register** on November 27, 2013 (77 FR 70828).

Interested parties are encouraged to send comments to the OMB, Office of Information and Regulatory Affairs at the address shown in the **ADDRESSES** section by March 4, 2013. In order to help ensure appropriate consideration, comments should mention OMB Control Number 1210–0138. The OMB is particularly interested in comments that:

- Evaluate whether the proposed collection of information is necessary for the proper performance of the functions of the agency, including whether the information will have practical utility;
- Evaluate the accuracy of the agency's estimate of the burden of the proposed collection of information, including the validity of the methodology and assumptions used;
- Enhance the quality, utility, and clarity of the information to be collected; and
- Minimize the burden of the collection of information on those who are to respond, including through the use of appropriate automated, electronic, mechanical, or other technological collection techniques or other forms of information technology, e.g., permitting electronic submission of responses.

Agency: DOL–EBSA.

Title of Collection: Notice of Medical Necessity Criteria under the Mental Health Parity and Addiction Equity Act of 2008.

OMB Control Number: 1210–0138.

Affected Public: Private Sector—businesses or other for-profits and not-for-profit institutions.

Total Estimated Number of Respondents: 420,400.

Total Estimated Number of Responses: 420,400.

Total Estimated Annual Burden Hours: 900.

Total Estimated Annual Other Costs Burden: $569,614.

Dated: January 25, 2013.

Michel Smyth,

Departmental Clearance Officer.

[FR Doc. 2013–02142 Filed 1–31–13; 8:45 am]

BILLING CODE 4510–29–P

DEPARTMENT OF LABOR

Office of the Secretary

Agency Information Collection Activities; Submission for OMB Review; Comment Request; International Training Application

ACTION: Notice.

SUMMARY: The Department of Labor (DOL) is submitting the Bureau of Labor Statistics (BLS) sponsored information collection request (ICR) titled, ''International Training Application,'' to the Office of Management and Budget (OMB) for review and approval for continued use in accordance with the Paperwork Reduction Act (PRA) of 1995 (44 U.S.C. 3501 *et seq.*).

DATES: Submit comments on or before March 4, 2013.

ADDRESSES: A copy of this ICR with applicable supporting documentation; including a description of the likely respondents, proposed frequency of response, and estimated total burden may be obtained from the RegInfo.gov Web site, *http://www.reginfo.gov/public/do/PRAMain,* on the day following publication of this notice or by contacting Michel Smyth by telephone at 202–693–4129 (this is not a toll-free number) or sending an email to *DOL_PRA_PUBLIC@dol.gov.*

Submit comments about this request to the Office of Information and Regulatory Affairs, Attn: OMB Desk Officer for DOL–BLS, Office of Management and Budget, Room 10235, 725 17th Street NW., Washington, DC 20503, Fax: 202–395–6881 (this is not a toll-free number), email: *OIRA_submission@omb.eop.gov.*

FOR FURTHER INFORMATION CONTACT: Michel Smyth by telephone at 202–693–4129 (this is not a toll-free number) or by email at *DOL_PRA_PUBLIC@dol.gov.*

Authority: 44 U.S.C. 3507(a)(1)(D).

SUPPLEMENTARY INFORMATION: This ICR seeks a three-year extension of BLS authority to obtain information needed to enroll participants in BLS international training programs. The BLS is one of the largest labor statistics organizations in the world and has provided international training in labor market information and price indexes since 1945. Each year, the BLS conducts training programs of 1 to 2 weeks duration at its training facilities in Washington, DC.

This information collection is subject to the PRA. A Federal agency generally cannot conduct or sponsor a collection of information, and the public is generally not required to respond to an information collection, unless it is approved by the OMB under the PRA and displays a currently valid OMB Control Number. In addition, notwithstanding any other provisions of law, no person shall generally be subject to penalty for failing to comply with a collection of information that does not display a valid Control Number. *See* 5 CFR 1320.5(a) and 1320.6. The DOL obtains OMB approval for this information collection under Control Number 1220–0179. The current approval is scheduled to expire on February 28, 2013; however, it should be noted that existing information collection requirements submitted to the OMB receive a month-to-month extension while they undergo review. For additional information, see the related notice published in the **Federal Register** on September 26, 2012 (77 FR 59225).

Interested parties are encouraged to send comments to the OMB, Office of Information and Regulatory Affairs at the address shown in the **ADDRESSES** section within 30 days of publication of this notice in the **Federal Register**. In order to help ensure appropriate consideration, comments should mention OMB Control Number 1220–0179. The OMB is particularly interested in comments that:

- Evaluate whether the proposed collection of information is necessary for the proper performance of the functions of the agency, including whether the information will have practical utility;
- Evaluate the accuracy of the agency's estimate of the burden of the proposed collection of information, including the validity of the methodology and assumptions used;
- Enhance the quality, utility, and clarity of the information to be collected; and
- Minimize the burden of the collection of information on those who are to respond, including through the use of appropriate automated, electronic, mechanical, or other technological collection techniques or other forms of information technology, e.g., permitting electronic submission of responses.

Agency: DOL–BLS.

Title of Collection: International Training Application.

OMB Control Number: 1220–0179.

Affected Public: Individuals or Households.

Total Estimated Number of Respondents: 100.

Total Estimated Number of Responses: 100.

Total Estimated Annual Burden Hours: 34.

Total Estimated Annual Other Costs Burden: $0.

Dated: January 24, 2013.

Michel Smyth,

Departmental Clearance Officer.

[FR Doc. 2013–02135 Filed 1–31–13; 8:45 am]

BILLING CODE 4510–24–P

DEPARTMENT OF LABOR

Mine Safety and Health Administration

Petitions for Modification of Application of Existing Mandatory Safety Standards

AGENCY: Mine Safety and Health Administration, Labor.

ACTION: Notice.

SUMMARY: Section 101(c) of the Federal Mine Safety and Health Act of 1977 and 30 CFR Part 44 govern the application, processing, and disposition of petitions for modification. This notice is a summary of petitions for modification submitted to the Mine Safety and Health Administration (MSHA) by the parties listed below to modify the application of existing mandatory safety standards codified in Title 30 of the Code of Federal Regulations.

DATES: All comments on the petitions must be received by the Office of Standards, Regulations and Variances on or before March 4, 2013.

ADDRESSES: You may submit your comments, identified by ''docket number'' on the subject line, by any of the following methods:

1. *Electronic Mail: zzMSHA-comments@dol.gov.* Include the docket number of the petition in the subject line of the message.
2. *Facsimile:* 202–693–9441.
3. *Regular Mail or Hand Delivery:* MSHA, Office of Standards, Regulations and Variances, 1100 Wilson Boulevard, Room 2350, Arlington, Virginia 22209–3939, Attention: George F. Triebsch, Director, Office of Standards, Regulations and Variances. Persons delivering documents are required to check in at the receptionist's desk on the 21st floor. Individuals may inspect copies of the petitions and comments during normal business hours at the address listed above.

MSHA will consider only comments postmarked by the U.S. Postal Service or proof of delivery from another delivery service such as UPS or Federal Express on or before the deadline for comments.

FOR FURTHER INFORMATION CONTACT: Barbara Barron, Office of Standards, Regulations and Variances at 202–693–9447 (Voice), *barron.barbara@dol.gov* (Email), or 202–693–9441 (Facsimile). [These are not toll-free numbers.]

SUPPLEMENTARY INFORMATION:

I. Background

Section 101(c) of the Federal Mine Safety and Health Act of 1977 (Mine Act) allows the mine operator or representative of miners to file a petition to modify the application of any mandatory safety standard to a coal or other mine if the Secretary of Labor determines that:

(1) An alternative method of achieving the result of such standard exists which will at all times guarantee no less than the same measure of protection afforded the miners of such mine by such standard; or

(2) That the application of such standard to such mine will result in a diminution of safety to the miners in such mine.

In addition, the regulations at 30 CFR 44.10 and 44.11 establish the requirements and procedures for filing petitions for modification.

II. Petitions for Modification

Docket No: M–2013–001–C.

Petitioner: Sterling Mining Corporation, P.O. Box 217, North Lima, Ohio 44452.

Mines: Shean Hill, MSHA I.D. No. 33–04591, located in Jefferson County, Ohio, and Carroll Hollow #6, MSHA I.D. No. 33–04605, located in Carroll County, Ohio.

Regulation Affected: 30 CFR 75.1100–2(b) (Quantity and location of firefighting equipment).

Modification Request: The petitioner requests a modification of the existing standard to permit fire hose outlets and valves required every 300 feet along conveyor belt entries to be maintained at the main waterline located in the common entry adjacent to the conveyor belt entry, rather than projected from the waterline across the entry where the waterline is located and into the crosscut separating the conveyor belt entry from the adjacent entry. The petitioner states that:

1. The alternative location of outlets and valves will be more accessible and will allow the fire hose outlets and valves to be located in an area less likely to be struck by a miner or equipment. This will result in less likelihood of injury to a miner or damage to the outlet and valves before or during their potential use and could make them more likely to function properly in the event they are needed.

2. The existing standard requires waterlines to be installed parallel to the entire length of belt conveyors and be equipped with fire hose outlets with valves at intervals no greater than 300 feet along the conveyors and at tailpieces.

3. The existing standard allows for the waterlines to be installed in entries adjacent to the conveyor belt entry as long as the outlets project into the conveyor belt entry.

4. Currently the waterlines for the mines listed in this petition are maintained in an adjacent common air entry to the beltline. The adjacent entry is the secondary escapeway and most traveled roadway in the mine. The waterline runs along the side of the adjacent entry and against the stopping line separating the neutral belt air course from the return or intake air course, which eliminates the potential of the waterline inhibiting travel between the belt entry and the adjacent roadway.

5. Every 300 feet along the conveyor belt, a 2-inch water pipe is plumbed into the main waterline, projected along the roof above the roadway, and into the crosscut separating the belt and adjacent entries where they are fitted with the proper outlets and valves.

6. Due to the thin coal seam and low mining height, the pipes placed along the roof line result in a hazardous condition where miners could contact a pipe, potentially causing head and neck injuries. The pipes placed along the roof are also at risk of being hit and damaged by equipment, which could cause the damaged pipe and perhaps the entire mine water system to be temporarily inoperative while the damage is being repaired.

7. Placing the outlets and valves at the main waterline rather than projected across the roadway into the crosscut adjacent to the conveyor belt entry will move their location 20 feet from the current location. This move will have no effect on the coverage of the fire protection system and will make the fire outlets and valves more accessible.

8. Travel in the belt entry is relatively difficult. It is only traveled during inspection and maintenance of the conveyor belt entry. Most of the travel is in the adjacent entry common to the conveyor belt entry where the main waterline is located. In the event of a fire in the beltline, the miners who retrieve the fire hose and mobilize to fight the fire will travel the roadway to the necessary outlet and valve.

9. Once the miners have traveled the roadway to the necessary outlet and valve, they will be able to hook up the fire hose in the adjacent entry, and move safely into the conveyor belt entry and begin fighting the fire.

The petitioner asserts that the proposed alternative method will at all times guarantee no less than the same measure of protection as that afforded by the existing standard.

Docket Number: M–2013–001–M.

Petitioner: Specialty Granules (Ione) LLC, 1101 Opal Court, Suite 315, Hagerstown, Maryland 21740.

Mine: Ione Mine, MSHA I.D. No. 04–05533, 1900 Highway 104, Ione, California 95640, located in Amador County, California.

Regulation Affected: 30 CFR 56.13020 (Use of compressed air).

Modification Request: The petitioner requests a modification of the existing standard to permit an alternative method for implementing a clothes cleaning process that uses regulated compressed air for cleaning miners' dust-laden clothing. The petitioner states that:

1. Only miners trained in the operation of the clothes cleaning booth will be permitted to use the booth to clean their clothes.

2. The petitioner will incorporate the NIOSH Clothes Cleaning Process and Manufacturer's Instruction Manuals into their MSHA Part 46 Training Plan and train affected miners in the process.

3. Miners entering the booth will examine valves and nozzles for damage or malfunction and will close the door fully before opening the air valve. Any defects will be repaired prior to the booth being used.

4. Miners entering the booth will wear eye protection; ear plugs or muffs for hearing protection; and, a full-face or half-mask respirator that meets or exceeds the minimum requirements of a N95 filter to which the miner has been fit-tested. As an alternative, the use of a full-face respirator will meet the requirement for eye protection. A sign will be conspicuously posted requiring the use of personal protective equipment when entering the booth.

5. Airflow through the booth will be at least 2,000 cubic feet per minute to maintain negative pressure during use of the cleaning system to prevent contamination of the environment outside the booth. Airflow will be in a downward direction to move contaminants away from the miner's breathing zone.

6. Air pressure through the spray manifold will be limited to 30 pounds per square inch or less. A lock box with a single key controlled by the plant manager will be used to prevent regulator tampering.

7. The air spray manifold will consist of a 1½ inch, square tube with ¼-inch wall thickness capped at the base and actuated by an electrically controlled valve at the top.

8. Air nozzles will not exceed 30 pounds per square inch gauge.

9. The uppermost spray of the spray manifold will be located below the booth users' breathing zone. Some type of mechanical device may be used to cover the upper air nozzles to meet the specific height of the user.

10. Air nozzles will be guarded to eliminate the possibility of incidental contact that could create mechanical damage to the air nozzles during the clothes cleaning process.

11. The petitioner will conduct periodic maintenance checks of the booth according to the recommendations contained in the Manufacturer's Instruction Manual.

12. The air receiver tank supplying air to the manifold system will be of sufficient volume to permit no less than

20 seconds of continuous clothes cleaning time.

13. An appropriate hazard warning sign will be posted on the booth to state, at a minimum, ''Compressed Air'' and ''Respirable Dust''.

14. A pressure relief valve designed for the booth's air reservoir will be installed.

15. The mine will exhaust dust-laden air from the booth into a local exhaust ventilation system or duct outside the facility while ensuring there is no re-entrainment back into the structure.

The petitioner further states that:

1. The alternative method provides a direct reduction of miners' exposure to respirable dust, thus reducing their health risks while providing no less than the same degree of safety provided by the existing standard.

2. The alternative method has been jointly developed between Unimin Corporation and the National Institute for Occupational Safety and Health (NIOSH) and successfully tested by NIOSH.

The petitioner asserts that the proposed alternative method will at all times guarantee no less than the same measure of protection afforded by the existing standard.

Docket Number: M–2013–002–M.

Petitioner: Specialty Granules, Inc., 1101 Opal Court, Suite 315, Hagerstown, Maryland 21740.

Mines: Annapolis Mine, MSHA I.D. No. 23–00288, #1 Hillcrest Drive, Annapolis, Missouri 63620, located in Iron County, Missouri; Charmian Mine, MSHA I.D. No. 36–03460, 1455 Old Waynesboro Road, Blue Ridge Summit, Pennsylvania 17214, located in Franklin County, Pennsylvania; and Kremlin Mine, MSHA I.D. No. 47–00148, 248 Kremlin Road, Pembine, Wisconsin 54156; located in Marinette County, Wisconsin.

Regulation Affected: 30 CFR 56.13020 (Use of compressed air).

Modification Request: The petitioner requests a modification of the existing standard to permit an alternative method for implementing a clothes cleaning process that uses regulated compressed air for cleaning miners' dust-laden clothing. The petitioner states that:

1. Only miners trained in the operation of the clothes cleaning booth will be permitted to use the booth to clean their clothes.

2. The petitioner will incorporate the NIOSH Clothes Cleaning Process and Manufacturer's Instruction Manuals into their MSHA Part 46 Training Plan and train affected miners in the process.

3. Miners entering the booth will examine valves and nozzles for damage or malfunction and will close the door fully before opening the air valve. Any defects will be repaired prior to the booth being used.

4. Miners entering the booth will wear eye protection; ear plugs or muffs for hearing protection; and, a full-face or half-mask respirator that meets or exceeds the minimum requirements of a N95 filter to which the miner has been fit-tested. As an alternative, the use of a full-face respirator will meet the requirement for eye protection. A sign will be conspicuously posted requiring the use of personal protective equipment when entering the booth.

5. Airflow through the booth will be at least 2,000 cubic feet per minute to maintain negative pressure during use of the cleaning system to prevent contamination of the environment outside the booth. Airflow will be in a downward direction to move contaminants away from the miner's breathing zone.

6. Air pressure through the spray manifold will be limited to 30 pounds per square inch or less. A lock box with a single key controlled by the plant manager will be used to prevent regulator tampering.

7. The air spray manifold will consist of a 1½; inch, square tube with ¼-inch wall thickness capped at the base and actuated by an electrically controlled valve at the top.

8. Air nozzles will not exceed 30 pounds per square inch gauge.

9. The uppermost spray of the spray manifold will be located below the booth users' breathing zone. Some type of mechanical device may be used to cover the upper air nozzles to meet the specific height of the user.

10. Air nozzles will be guarded to eliminate the possibility of incidental contact that could create mechanical damage to the air nozzles during the clothes cleaning process.

11. The petitioner will conduct periodic maintenance checks of the booth according to the recommendations contained in the Manufacturer's Instruction Manual.

12. The air receiver tank supplying air to the manifold system will be of sufficient volume to permit no less than 20 seconds of continuous clothes cleaning time.

13. An appropriate hazard warning sign will be posted on the booth to state, at a minimum, ''Compressed Air'' and ''Respirable Dust''.

14. A pressure relief valve designed for the booth's air reservoir will be installed.

15. The mine will exhaust dust-laden air from the booth into a local exhaust ventilation system or duct outside the facility while ensuring there is no re-entrainment back into the structure.

The petitioner further states that:

1. The alternative method provides a direct reduction of miners' exposure to respirable dust, thus reducing their health risks while providing no less than the same degree of safety provided by the existing standard.

2. The alternative method has been jointly developed between Unimin Corporation and the National Institute for Occupational Safety and Health (NIOSH) and successfully tested by NIOSH.

The petitioner asserts that the proposed alternative method will at all times guarantee no less than the same measure of protection afforded by the existing standard.

Dated: January 29, 2013.

George F. Triebsch,

Director, Office of Standards, Regulations and Variances.

[FR Doc. 2013–02190 Filed 1–31–13; 8:45 am]

BILLING CODE 4510–43–P

DEPARTMENT OF LABOR

Occupational Safety and Health Administration

[Docket No. OSHA–2012–0055]

Stakeholder Meeting on the Nationally Recognized Testing Laboratory Program

AGENCY: Occupational Safety and Health Administration (OSHA), Labor.

ACTION: Notice of stakeholder meeting.

SUMMARY: OSHA invites interested parties to attend an informal stakeholder meeting concerning Nationally Recognized Testing Laboratory (NRTL) Program policies. The meeting will focus on the following topics: NRTL independence; the NRTL initial application process and timeline; the NRTL renewal process; and, at OSHA's discretion and as time permits, other topics raised by participants or OSHA staff. OSHA plans to use the information gathered at this meeting to explore development of new or revised policies, procedures, or guidelines for the NRTL Program.

DATES: The stakeholder meeting will be held on Wednesday, March 6, 2013, from 10 a.m. to 1 p.m., e.t., in Washington, DC. The deadline to register to attend the meeting as a participant or an observer is Friday, February 22, 2013. Those who submit their registrations after February 22, 2013, may not receive confirmation of their attendance from OSHA. The

deadline to submit, in writing, suggestions of additional topics for the meeting is Wednesday, February 13, 2013. Information concerning other forms of attendance (e.g., by phone) and the room number for the meeting will be available, no later than Wednesday, February 20, 2013, on OSHA's NRTL Program Web site *http://www.osha.gov/nrtlpi,* and in the docket for this meeting (Docket ID: OSHA–2012–0055, available at *http://www.regulations.gov,* and the OSHA Docket Office).

ADDRESSES: The meeting location, and addresses for registering and for suggesting additional topics, are as follows:

1. Stakeholder Meeting

OSHA will hold the stakeholder meeting in the Francis Perkins Building, U.S. Department of Labor, at 200 Constitution Avenue NW., Washington, DC 20210. See **DATES** and **SUPPLEMENTARY INFORMATION** concerning the room number for the meeting.

2. Registration to Attend

To register to attend as a participant or an observer, use one of the three methods listed below. For additional information about registering, see the ''Registration'' section of this notice under **SUPPLEMENTARY INFORMATION** below.

a. *Electronically:* Email your notification to attend to Ms. Lisa Saylor Gentry at *gentry.lisa@dol.gov, and label the subject line of the email* ''NRTL March 6, 2013, Stakeholder Meeting Registration.''

b. *Facsimile:* Fax your notification to attend to Ms. Gentry at (202) 693–1644, and label it ''NRTL March 6, 2013, Stakeholder Meeting Registration.''

c. *Regular or express mail, hand delivery, or messenger (courier) service:* Send your notification to attend to: OSHA Directorate of Technical Support and Emergency Management, 200 Constitution Ave. NW., Room N–3655, Washington, DC 20210, Attention: Lisa Saylor Gentry. On the outside of the envelope, write ''NRTL March 6, 2013, Stakeholder Meeting Registration.'' Note that security procedures may result in significant delays in receiving registrations by regular mail. If you have any questions about these instructions, contact Ms. Gentry at (202) 693–1996.

3. Suggesting Additional Topics

Submit, in writing to the public docket, your suggestions for additional topics to address at the meeting through one of the three methods listed below. For additional information about submissions to the public docket, see the ''Submissions to the Public Docket'' section of this notice under **SUPPLEMENTARY INFORMATION**, below.

a. *Electronically:* Submit suggested topics and any attachments electronically at *http://www.regulations.gov,* which is the Federal eRulemaking Portal. Follow the instructions online for making electronic submissions.

b. *Facsimile:* If submissions, including attachments, are not longer than ten (10) pages, commenters may fax them to the OSHA Docket Office at (202) 693–1648.

c. *Regular or express mail, hand delivery, or messenger (courier) service:* Submit suggestions of additional topics and any attachments to: OSHA Docket Office, Docket No. OSHA–2012–0055, Technical Data Center, U.S. Department of Labor, 200 Constitution Avenue NW., Washington, DC 20210; telephone: (202) 693–2350 (TDY number: (877) 889–5627). Note that security procedures may result in significant delays in receiving submissions and other written materials by regular mail. Contact the OSHA Docket Office for information about security procedures concerning delivery of materials by regular or express mail, hand delivery, or messenger (courier) service. The hours of operation for the OSHA Docket Office are 8:15 a.m.–4:45 p.m., e.t.

FOR FURTHER INFORMATION CONTACT: Information regarding this notice is available from the following sources:

Press inquiries: Contact Frank Meilinger, Director, OSHA Office of Communications, Room N–3647, U.S. Department of Labor, 200 Constitution Avenue NW., Washington, DC 20210; telephone: (202) 693–1999; email: *meilinger.francis2@dol.gov.*

General and technical information: Contact Lisa Saylor Gentry, Program Analyst, OSHA Directorate of Technical Services and Emergency Management, U.S. Department of Labor, 200 Constitution Avenue NW., Room N–3655,Washington, DC 20210; telephone: (202) 693–1996; email: *gentry.lisa@dol.gov.*

Copies of this ***Federal Register*** *notice:* Electronic copies are available at *http://www.regulations.gov.* This **Federal Register** notice, as well as news releases and other relevant information, also are available on the OSHA Web page at *http://www.osha.gov.*

SUPPLEMENTARY INFORMATION:

1. Background

OSHA's safety standards require that a Nationally Recognized Testing Laboratory (NRTL) approve thirty-eight (38) types of products as safe for use in the workplace. NRTLs are independent laboratories that meet OSHA's requirements for performing safety testing and certification of products used in the workplace. NRTLs test and certify (i.e., approve) these products to determine whether they conform to appropriate U.S. product-safety test standards. Each NRTL authorizes manufacturers of approved products to use the NRTL's certification mark to signify the NRTL tested and certified the product as meeting the requirements of the appropriate test standard(s). To obtain and retain recognition from OSHA as an NRTL, the NRTLs must meet the requirements of 29 CFR 1910.7, as well as the policies contained in the NRTL Program Directive, Directive Number CPL 01–00–003.

OSHA staff currently is reexamining several aspects of the NRTL Program in an effort to determine whether it should revise NRTL Program policies, procedures, or guidelines to improve the quality of services provided to NRTLs. As part of that effort, the NRTL Program may soon propose new or revised policies, procedures, or guidelines in the areas of independence, the NRTL application process, and the process for NRTL renewal. Any revisions that OSHA plans to make will not reduce worker safety.

OSHA will conduct this stakeholder meeting as a group discussion on certain topics described below. OSHA determined that informal discussion with stakeholders would be beneficial to its further deliberations on how to proceed with respect to proposing new or revised NRTL Program policies, procedures, or guidelines. The meeting also will serve as a forum to solicit input from stakeholders concerning specific topics related to the NRTL Program, which will inform OSHA staff as they continue in their development and update efforts. To facilitate as much group interaction as possible, OSHA is not permitting formal presentations by meeting attendees.

2. Stakeholder Meeting

The meeting will last about three hours. Attendees should arrive at least thirty (30) minutes early to allow time for security clearance. The nearest Metro station is Judiciary Square (Red Line), and private parking is available within walking distance of the building. Meeting attendees must have a valid photo identification (e.g., driver's license), and will need to obtain a pass from our security desk to enter the building. Security-clearance information is available at *http://www.dol.gov/dol/aboutdol/visit.htm.* Information concerning other forms of attendance (e.g., by phone) and the room number

for the meeting will be available, no later than Wednesday, February 20, 2013, on OSHA's NRTL Program Web site *http://www.osha.gov/nrtlpi,* and in the docket for this meeting (Docket ID: OSHA–2012–0055, available at *http://www.regulations.gov,* and the OSHA Docket Office).

OSHA is limiting the meeting to approximately 20 participants, but may accommodate more participants at its discretion and as time permits. OSHA will try to accommodate all attendees who wish to participate. To ensure that all views are represented, OSHA encourages individuals and groups having similar interests to consolidate their information and participate through a single representative. Members of the general public not chosen to participate may observe, but not participate in, the meeting, unless time permits; such participation is at OSHA's discretion. OSHA staff will be present to take part in the discussions.

The specific topics for discussion include:

a. The effectiveness of the current NRTL Program independence policy, and a potential draft NRTL Program independence policy and draft independence worksheet;

b. The NRTL Program initial application timeline and the application process;

c. The NRTL Program process for NRTL renewal; and

d. At OSHA's discretion and as time permits, any other topics submitted to OSHA through the process, described in the ''Suggesting Additional Topics'' section under **ADDRESSES** above and in the ''Submissions to the Public Docket'' section, below, or raised by OSHA staff.

OSHA will provide to the public the final meeting agenda, and any specific documents OSHA will use at the stakeholder meeting, by Wednesday February 20, 2013. These documents will be available by that date at OSHA's NRTL Program Web site *http://www.osha.gov/nrtlpi;* and in the docket for this notice, Docket ID: OSHA–2012–0055, available at: *http://www.regulations.gov,* and the OSHA Docket Office.

Eastern Research Group (ERG), Inc., (110 Hartwell Avenue, Lexington, MA 02421) will provide a facilitator for the meeting. OSHA will prepare a full transcript of the meeting, and post this transcript on the NRTL Program Web site *http://www.osha.gov/nrtlpi,* and in the docket for this notice, Docket ID: OSHA–2012–0055, available at *http://www.regulations.gov* and the OSHA Docket Office.

3. Registration

Submit a notification to attend as a participant or an observer in the stakeholder meeting by Friday, February 22, 2013, using one of the three methods described above in the ''Notification to Attend'' section of this notice under **ADDRESSES**. If you would like to attend by means other than in-person attendance (e.g., if you would like to attend by phone), please include this information with your registration.

OSHA will accommodate attendees who do not register for the meeting if space permits. However, those who wish to participate in the meeting must register as participants. OSHA will consider as an observer any attendee who does not register as a participant.

The number of attendees who may participate in the meeting is limited; therefore, OSHA will grant priority as a participant to current or former NRTLs, and current NRTL applicants. Only one representative from each organization may attend as a participant, but this organization may have more than one observer in attendance (space permitting).

Any individual or entity not affiliated with a current or former NRTL, or a current NRTL applicant, wishing to participate in the meeting must submit, with their notification to attend, a written statement that indicates their interest in the NRTL Program and the specific topic(s) they wish to discuss. OSHA will treat these submissions as suggestions for potential additional topics for discussion at the meeting, and will enter the statements into the docket for the meeting. However, if OSHA receives these statements after Wednesday, February 13, 2013 (the last day to timely submit topics), OSHA may not review the statements for the purpose of generating a meeting agenda (see relevant discussion in the ''Submissions to the Public Docket'' section, directly below).

Registrants not affiliated with a current or former NRTL, or a current NRTL applicant, who raise a specific topic they would like discussed at the meeting will have priority as participants over similar attendees who raise broad topics only. OSHA cannot guarantee participation for all those who register as participants, but it will, at its discretion, accommodate registrants who want to participate, and make every effort to ensure a fair representation of interests and to facilitate gathering diverse viewpoints.

In registering, current or former NRTLs, and current NRTL applicants, need not submit statements indicating their interest in the NRTL Program and the specific topic(s) they wish to discuss. However, these organizations are welcome to submit, in writing, suggestions for additional topics for discussion (pursuant to the procedures described in the ''Suggesting Additional Topics'' section under **ADDRESSES**, above, and in the ''Submissions to the Public Docket'' section, directly below).

When registering, please provide the following information:

a. Name, contact address, daytime phone, fax, and email address;

b. The organization for which you work or represent, if any;

c. Whether you are employed at, affiliated with, or represent a current or former NRTL or a current NRTL applicant;

d. Whether you are attending as a participant or observer;

e. If you will be attending by means other than in-person attendance (e.g., by phone) and wish to be a participant; and

f. If you are not affiliated with a current or former NRTL, or current NRTL applicant, and wish to attend as a participant, a written statement that indicates your interest in the NRTL Program and the specific topic(s) you wish to discuss. (OSHA will, at its discretion, make these topics part of the meeting agenda.)

4. Submissions to the Public Docket

All submissions to the public docket must: (1) Be made using any of the methods listed above in the section of this notice titled ''Suggesting Additional Topics'' under **ADDRESSES**; and (2) include the Agency name (i.e., OSHA) and the OSHA docket number (i.e., OSHA–2012–0055). To be considered timely, you must make submissions to the public docket by Wednesday, February 13, 2013.

Note that a submission to the public docket does not constitute registration to attend the meeting as a participant or an observer. To register as a participant or an observer, you must follow the procedures described above in the section of this notice titled ''Registration'' under **SUPPLEMENTARY INFORMATION**.

OSHA will use the submissions it timely receives to help it establish the meeting agenda, which it will release on Wednesday February 20, 2013, by way of OSHA's NRTL Program Web site *http://www.osha.gov/nrtlpi,* and in the docket for this notice, Docket ID: OSHA–2012–0055, available at *http://www.regulations.gov* and the OSHA Docket Office. OSHA will consider submissions made after February 13, 2013, untimely and may not use such submissions in generating the meeting agenda.

OSHA will place all submissions, including any personal information, in the public docket without revision. Therefore, OSHA cautions commenters about submitting statements they do not want made public, or submissions that contain personal information (either about themselves or others) such as Social Security numbers, birth dates, and medical data. To read or download submissions or other material in the docket (e.g., public submissions of suggested topics), go to *http://www.regulations.gov* or to the OSHA Docket Office. All documents placed in the docket will be referenced electronically at *http://www.regulations.gov* (Docket ID: OSHA–2012–0055); however, some information (e.g., copyrighted material) is not publicly available to read or download through the Web site. All submissions, including copyrighted material, will be available for inspection at the OSHA Docket Office. Contact the OSHA Docket Office for assistance in locating docket submissions.

Authority and Signature

David Michaels, Ph.D., MPH, Assistant Secretary of Labor for Occupational Safety and Health, 200 Constitution Avenue NW., Washington, DC 20210, authorized the preparation of this notice. Accordingly, the Agency is issuing this notice pursuant to 29 U.S.C. 657(g)(2)), and Secretary of Labor's Order No. 1–2012 (77 FR 3912, Jan. 25, 2012).

Signed at Washington, DC, on January 29, 2013.

David Michaels,

Assistant Secretary of Labor for Occupational Safety and Health.

[FR Doc. 2013–02173 Filed 1–31–13; 8:45 am]

BILLING CODE 4510–26–P

NATIONAL AERONAUTICS AND SPACE ADMINISTRATION

[13–006]

Information Collection

AGENCY: National Aeronautics and Space Administration (NASA).

ACTION: Notice.

SUMMARY: The National Aeronautics and Space Administration, as part of its continuing effort to reduce paperwork and respondent burden, invites the general public and other Federal agencies to take this opportunity to comment on proposed and/or continuing information collections, as required by the Paperwork Reduction Act of 1995.

DATES: All comments should be submitted within 60 calendar days from the date of this publication.

ADDRESSES: All comments should be addressed to Fran Teel, National Aeronautics and Space Administration, Washington, DC 20546–0001.

FOR FURTHER INFORMATION CONTACT: Requests for additional information or copies of the information collection instrument(s) and instructions should be directed to Fran Teel, NASA PRA Officer, NASA Headquarters, 300 E Street SW., JF000, Washington, DC 20546, (202) 358–2225.

SUPPLEMENTARY INFORMATION:

I. Abstract

This clearance request pertains to the collection of information from NASA grantees and cooperative agreement partners who are required to submit new technology reports indicating new inventions and patents.

II. Method of Collection

Grant recipients are encouraged to use information technology to prepare patent reports through a hyperlink to the electronic New Technology Reporting Web (eNTRe) site *http://invention.nasa.gov.* This Web site has been created to help NASA employees and parties under NASA funding agreements (i.e., contracts, grants, cooperative agreements, and subcontracts) to report new technology and patent notification directly, via a secure Internet connection, to NASA.

III. Data

Title: Patents—Grants and Cooperative Agreements.

OMB Number: 2700–0048.

Type of Review: Extension of currently approved collection.

Affected Public: Business or other for-profit, Not-for-profit institutions, Federal Government, and State, Local or Tribal Government.

Estimated Number of Respondents: 5487.

Estimated Time per Response: (a) 80% of respondents, or 4,390, will submit negative responses at .25 hours, and (b) 20% of respondents, or 1,097 will report inventions or patents at 8 hours.

Estimated Total Annual Public Burden Hours: 9,874.

Estimated Total Annual Public Cost: $335,716.

Estimated Government Review and Analysis Time per Response: (a) 4,390 at .15 hours, and (b) 1,097 at 2 hours.

Estimated Total Government Burden Hours: 2,853.

Estimated Total Government Cost: $97,002.

IV. Request for Comments

Comments are invited on: (1) Whether the proposed collection of information is necessary for the proper performance of the functions of NASA, including whether the information collected has practical utility; (2) the accuracy of NASA's estimate of the burden (including hours and cost) of the proposed collection of information; (3) ways to enhance the quality, utility, and clarity of the information to be collected; and (4) ways to minimize the burden of the collection of information on respondents, including automated collection techniques or the use of other forms of information technology.

Comments submitted in response to this notice will be summarized and included in the request for OMB approval of this information collection. They will also become a matter of public record.

Frances C. Teel,

NASA PRA Clearance Officer.

[FR Doc. 2013–02342 Filed 1–31–13; 8:45 am]

BILLING CODE 7510–13–P

NATIONAL AERONAUTICS AND SPACE ADMINISTRATION

[13–007]

Information Collection

AGENCY: National Aeronautics and Space Administration (NASA).

ACTION: Notice.

SUMMARY: The National Aeronautics and Space Administration, as part of its continuing effort to reduce paperwork and respondent burden, invites the general public and other Federal agencies to take this opportunity to comment on proposed and/or continuing information collections, as required by the Paperwork Reduction Act of 1995.

DATES: All comments should be submitted within 60 calendar days from the date of this publication.

ADDRESSES: All comments should be addressed to Frances Teel, National Aeronautics and Space Administration, 300 E Street SW., Washington, DC 20546–0001.

FOR FURTHER INFORMATION CONTACT: Requests for additional information or copies of the information collection instrument(s) and instructions should be directed to Frances Teel, NASA Clearance Officer, NASA Headquarters, 300 E Street SW., JF0000, Washington, DC 20546, (202) 358–2225.

SUPPLEMENTARY INFORMATION:

I. Abstract

NASA collects information to ensure proper accounting of Federal funds and property provided under grants and cooperative agreements with state and local governments.

II. Method of Collection

Submission of almost all information required under grants or cooperative agreements with state and local governments, including property, financial, and performance reports, is electronic.

III. Data

Title: Grants and Cooperative Agreements with State and Local Governments.

OMB Number: 2700–0093.

Type of review: Revision of currently approved collection.

Affected Public: State, Local or Tribal Governments.

Estimated Number of Respondents: 30.

Estimated Time per Response: Proposals, 40 hours; Requests for Payments, 12 hours; Financial Reports, 6 hours; Property Reports, 4 hours; Patent Reports, 1 hour; Performance Reports, 4 hours and; Changes, 1 hour. Total is 68 hours.

Estimated Total Annual Public Burden Hours: 2,040 hours.

Estimated Total Annual Public Cost: $69,360.

Estimated Total Annual Government Burden Hours: 1800.

Estimated Total Annual Government Cost: $ 61,200.

IV. Request for Comments

Comments are invited on: (1) Whether the proposed collection of information is necessary for the proper performance of the functions of NASA, including whether the information collected has practical utility; (2) the accuracy of NASA's estimate of the burden (including hours and cost) of the proposed collection of information; (3) ways to enhance the quality, utility, and clarity of the information to be collected; and (4) ways to minimize the burden of the collection of information on respondents, including automated collection techniques or the use of other forms of information technology.

Comments submitted in response to this notice will be summarized and included in the request for OMB approval of this information collection. They will also become a matter of public record.

Frances C. Teel,

NASA PRA Clearance Officer.

[FR Doc. 2013–02341 Filed 1–31–13; 8:45 am]

BILLING CODE 7510–13–P

NATIONAL SCIENCE FOUNDATION

Large Scale Networking (LSN)—Middleware And Grid Interagency Coordination (MAGIC) Team

AGENCY: The Networking and Information Technology Research and Development (NITRD) National Coordination Office (NCO). Reference the NITRD Web site at: *http://www.nitrd.gov/.*

ACTION: Notice of Meetings *(Update to MAGIC URL—January 29, 2013).*

Contact: Dr. Grant Miller at *miller@nitrd.gov* or (703) 292–4873.

Date/Location: The MAGIC Team meetings are held on the first Wednesday of each month, 2:00–4:00 pm, at the National Science Foundation, 4201 Wilson Boulevard, Arlington, VA 22230. Please note that public seating for these meetings is limited and is available on a first-come, first served basis. WebEx participation is available for each meeting. Please reference the MAGIC Team Web site for updates.

Magic Web site: The agendas, minutes, and other meeting materials and information can be found on the MAGIC Web site at: *http://www.nitrd.gov/nitrdgroups/index.php?title=Middleware_And_Grid_Interagency_Coordination_(MAGIC)#title.*

SUMMARY: The MAGIC Team, established in 2002, provides a forum for information sharing among Federal agencies and non-Federal participants with interests and responsibility for middleware, Grid, and cloud projects. The MAGIC Team reports to the Large Scale Networking (LSN) Coordinating Group (CG).

Public Comments: The government seeks individual input; attendees/participants may provide individual advice only. Members of the public are welcome to submit their comments to *magic-comments@nitrd.gov.* Please note that under the provisions of the Federal Advisory Committee Act (FACA), all public comments and/or presentations will be treated as public documents and will be made available to the public via the MAGIC Team Web site.

Submitted by the National Science Foundation in support of the Networking and Information Technology Research and Development (NITRD) National Coordination Office (NCO) on January 29, 2013.

Suzanne H. Plimpton,

Reports Clearance Officer, National Science Foundation.

[FR Doc. 2013–02189 Filed 1–31–13; 8:45 am]

BILLING CODE 7555–01–P

NATIONAL SCIENCE FOUNDATION

Large Scale Networking (LSN) ; Joint Engineering Team (JET)

AGENCY: The Networking and Information Technology Research and Development (NITRD) National Coordination Office (NCO), NSF. Reference the NITRD Web site at: *http://www.nitrd.gov/.*

ACTION: Notice of meetings *(update to JET URL—January 29, 2013).*

Contact: Dr. Grant Miller at *miller@nitrd.gov* or (703) 292–4873.

Date/Location: The JET meetings are held on the third Tuesday of each month, 11:00 a.m.–2:00 p.m., at the National Science Foundation, 4201 Wilson Boulevard, Arlington, VA 22230. Please note that public seating for these meetings is limited and is available on a first-come, first served basis. WebEx participation is available for each meeting. Please reference the JET Web site for updates.

Jet Web site: The agendas, minutes, and other meeting materials and information can be found on the JET Web site at: *http://www.nitrd.gov/nitrdgroups/index.php?title=Joint_Engineering_Team_(JET)#title.*

SUMMARY: The JET, established in 1997, provides for information sharing among Federal agencies and non-Federal participants with interest in high performance research networking and networking to support science applications. The JET reports to the Large Scale Networking (LSN) Coordinating Group (CG).

Public Comments: The government seeks individual input; attendees/participants may provide individual advice only. Members of the public are welcome to submit their comments to *jet-comments@nitrd.gov.* Please note that under the provisions of the Federal Advisory Committee Act (FACA), all public comments and/or presentations will be treated as public documents and will be made available to the public via the JET Web site.

Submitted by the National Science Foundation in support of the Networking and Information Technology Research and Development

(NITRD) National Coordination Office (NCO) on January 29, 2013.

Suzanne H. Plimpton,

Reports Clearance Officer, National Science Foundation.

[FR Doc. 2013–02188 Filed 1–31–13; 8:45 am]

BILLING CODE 7555–01–P

NUCLEAR REGULATORY COMMISSION

[Docket No. NRC–2012–0217]

Agency Information Collection Activities: Submission for the Office of Management and Budget (OMB) Review; Comment Request

AGENCY: Nuclear Regulatory Commission.

ACTION: Notice of the OMB review of information collection and solicitation of public comment.

SUMMARY: The U.S. Nuclear Regulatory Commission (NRC) has recently submitted to OMB for review the following proposal for the collection of information under the provisions of the Paperwork Reduction Act of 1995 (44 U.S.C. Chapter 35). The NRC hereby informs potential respondents that an agency may not conduct or sponsor, and that a person is not required to respond to, a collection of information unless it displays a currently valid OMB control number. The NRC published a **Federal Register** notice with a 60-day comment period on this information collection on November 20, 2012 (77 FR 69663).

1. *Type of submission, new, revision, or extension:* Extension.

2. *The title of the information collection:* 10 CFR part 55, Operators' Licenses.

3. *Current OMB approval number:* 3150–0018.

4. *The form number if applicable:* N/A.

5. *How often the collection is required:* As necessary for NRC to meet its responsibilities to determine the eligibility for applicants and operators.

6. *Who will be required or asked to report:* Holders of, and applicants for facility (i.e., nuclear power and non-power research and test reactor) operating licenses and individual operator licensees.

7. *An estimate of the number of annual responses:* 236.

8. *The estimated number of annual respondents:* 101.

9. *An estimate of the total number of hours needed annually to complete the requirement or request:* 165,900.

10. *Abstract:* Part 55 of Title 10 of the *Code of Federal Regulations* (10 CFR), ''Operators' Licenses,'' specifies information and data to be provided by applicants and facility licensees so that the NRC may make determinations concerning the licensing and requalification of operators for nuclear reactors, as necessary to promote public health and safety. The reporting and recordkeeping requirements contained in 10 CFR part 55 are mandatory for the facility licensees and the applicants affected.

The public may examine and have copied for a fee publicly available documents, including the final supporting statement, at the NRC's Public Document Room, Room O–1F21, One White Flint North, 11555 Rockville Pike, Rockville, Maryland 20874. The OMB clearance requests are available at the NRC's public Web site: *http://www.nrc.gov/public-involve/doc-comment/omb/.* The document will be available on the NRC's home page site for 60 days after the signature date of this notice.

Comments and questions should be directed to the OMB reviewer listed below by March 4, 2013. Comments received after this date will be considered if it is practical to do so, but assurance of consideration cannot be given to comments received after this date.

Chad Whiteman, Desk Officer, Office of Information and Regulatory Affairs (3150–0018), NEOB–10202, Office of Management and Budget, Washington, DC 20503.

Comments can also be emailed to *Chad_S_Whiteman@omb.eop.gov* or submitted by telephone at 202–395–4718.

The NRC Clearance Officer is Tremaine Donnell, 301–415–6258.

Dated at Rockville, Maryland, this 22nd day of January, 2013.

For the Nuclear Regulatory Commission.

Tremaine Donnell,

NRC Clearance Officer, Office of Information Services.

[FR Doc. 2013–02151 Filed 1–31–13; 8:45 am]

BILLING CODE 7590–01–P

NUCLEAR REGULATORY COMMISSION

Advisory Committee on the Medical Uses of Isotopes: Meeting Notice

AGENCY: U.S. Nuclear Regulatory Commission.

ACTION: Notice of meeting.

SUMMARY: The U.S. Nuclear Regulatory Commission (NRC) will convene a teleconference meeting of the Advisory Committee on the Medical Uses of Isotopes (ACMUI) on March 5, 2013, to discuss the draft report of the ACMUI Rulemaking Subcommittee that was formed to provide comments to the NRC staff on the proposed changes to 10 CFR Part 35. Contingent upon the outcome of the March 5, 2013, the NRC will also convene a second teleconference of the ACMUI on March 12, 2013, to further discuss the ACMUI Rulemaking Subcommittee Report. A copy of the agenda for each meeting will be available at *http://www.nrc.gov/reading-rm/doc-collections/acmui/agenda.* Handouts for each of the meetings will be available at *http://www.nrc.gov/reading-rm/doc-collections/acmui/meeting-slides/.* The agenda(s) and handouts may also by obtained by contacting Ms. Sophie Holiday using the information below.

DATES: The teleconference meeting will be held on Tuesday, March 5, 2013, 2:00 p.m. to 5:00 p.m. Eastern Standard Time (EST). The second teleconference meeting will be held on Tuesday, March 12, 2013, 2:00 p.m. to 5:00 p.m. Eastern Standard Time (EST).

Public Participation: Any member of the public who wishes to participate in the teleconference discussions should contact Ms. Holiday using the contact information below.

Contact Information: Sophie Holiday, email: *sophie.holiday@nrc.gov*, telephone: (301) 415–7865.

Conduct of the Meeting

Leon S. Malmud, M.D., will chair the meeting. Dr. Malmud will conduct the meeting in a manner that will facilitate the orderly conduct of business. The following procedures apply to public participation in the meeting:

1. Persons who wish to provide a written statement should submit an electronic copy to Ms. Holiday at the contact information listed above. All submittals must be received by February 28, three business days prior to the meeting, and must pertain to the topic on the agenda for the meeting.

2. Questions and comments from members of the public will be permitted during the meetings, at the discretion of the Chairman.

3. The transcript will be available on the ACMUI's web site (*http://www.nrc.gov/reading-rm/doc-collections/acmui/tr/)* approximately 30 calendar days following the meeting, on April 5, 2013 and April 12, 2013. A meeting summary will be available approximately 30 business days following the meeting, on April 16, 2013 and April 23, 2013.

The meetings will be held in accordance with the Atomic Energy Act of 1954, as amended (primarily Section

161a); the Federal Advisory Committee Act (5 U.S.C. App); and the Commission's regulations in Title 10, *U.S. Code of Federal Regulations,* Part 7.

Dated: January 28, 2013.

Andrew L. Bates,

Advisory Committee Management Officer.

[FR Doc. 2013–02178 Filed 1–31–13; 8:45 am]

BILLING CODE 7590–01–P

SECURITIES AND EXCHANGE COMMISSION

[Release No. IC–30370]

Notice of Applications for Deregistration Under Section 8(f) of the Investment Company Act of 1940

January 25, 2013.

The following is a notice of applications for deregistration under section 8(f) of the Investment Company Act of 1940 for the month of January 2013. A copy of each application may be obtained via the Commission's Web site by searching for the file number, or for an applicant using the Company name box, at *http://www.sec.gov/search/search.htm* or by calling (202) 551–8090. An order granting each application will be issued unless the SEC orders a hearing. Interested persons may request a hearing on any application by writing to the SEC's Secretary at the address below and serving the relevant applicant with a copy of the request, personally or by mail. Hearing requests should be received by the SEC by 5:30 p.m. on February 19, 2013, and should be accompanied by proof of service on the applicant, in the form of an affidavit or, for lawyers, a certificate of service. Hearing requests should state the nature of the writer's interest, the reason for the request, and the issues contested. Persons who wish to be notified of a hearing may request notification by writing to the Secretary, U.S. Securities and Exchange Commission, 100 F Street NE., Washington, DC 20549–1090.

FOR FURTHER INFORMATION CONTACT: Diane L. Titus at (202) 551–6810, SEC, Division of Investment Management, Office of Investment Company Regulation, 100 F Street NE., Washington, DC 20549–8010.

Value Line U.S. Government Money Market Fund Inc. [File No. 811–2898]

Summary: Applicant seeks an order declaring that it has ceased to be an investment company. The applicant has transferred its assets to Daily Income Fund and, on October 19, 2012, made a final distribution to its shareholders based on net asset value. Expenses of $71,500 incurred in connection with the reorganization were paid by applicant.

Filing Date: The application was filed on January 9, 2013.

Applicant's Address: 7 Times Sq., 21st Floor, New York, NY 10036.

Helios Strategic Mortgage Income Fund, Inc. [File No. 811–21102]

Summary: Applicant, a closed-end investment company, seeks an order declaring that it has ceased to be an investment company. The applicant has transferred its assets to Helios Total Return Fund Inc. and, on April 2, 2012, made a final distribution to its shareholders based on net asset value. Expenses of $375,151 incurred in connection with the reorganization were paid by applicant and the acquiring fund.

Filing Date: The application was filed on December 26, 2012.

Applicant's Address: Three World Financial Center, 200 Vesey St., New York, NY 10281–1010.

Foresight Funds Inc. [File No. 811–21385]

Summary: Applicant seeks an order declaring that it has ceased to be an investment company. On December 7, 2012, applicant made a liquidating distribution to its shareholders, based on net asset value. Expenses of $500 incurred in connection with the liquidation were paid by Foresight Asset Management, LLC, applicant's investment adviser.

Filing Date: The application was filed on December 18, 2012.

Applicant's Address: 1634 Pebble Chase Dr., Katy, TX 77450.

BlackRock Credit Allocation Income Trust I, Inc. [File No. 811–21341]; BlackRock Credit Allocation Income Trust III [File No. 811–21280]

Summary: Each applicant, a closed-end investment company, seeks an order declaring that it has ceased to be an investment company. The applicants have transferred their assets to BlackRock Credit Allocation Income Trust IV and, on December 10, 2012, made final distributions to their shareholders based on net asset value. Expenses of $219,798 and $247,780, respectively, incurred in connection with the reorganizations were paid by each applicant.

Filing Date: The applications were filed on January 15, 2013.

Applicants' Address: 100 Bellevue Parkway, Wilmington, DE 19809.

Delaware Investments Global Dividend and Income Fund, Inc. [File No. 811–8246]

Summary: Applicant, a closed-end investment company, seeks an order declaring that it has ceased to be an investment company. Applicant has transferred its assets to Delaware Enhanced Global Dividend and Income Fund, and on October 5, 2011, applicant made a distribution to its shareholders based on net asset value. The Bank of New York Mellon is holding in escrow applicant's remaining shares of the acquiring fund for the benefit of those former shareholders of applicant who have not turned in their physical share certificates. Expenses of approximately $233,975 incurred in connection with the reorganization were paid by applicant, the acquiring fund and Delaware Management Company, applicant's investment adviser.

Filing Date: The application was filed on November 20, 2012.

Applicant's Address: 2005 Market St., Philadelphia, PA 19103–7094.

Man Long Short Fund [File No. 811–22430]

Summary: Applicant, a closed-end investment company, seeks an order declaring that it has ceased to be an investment company. Applicant currently has fewer than 100 beneficial owners, is not presently making an offering of securities and does not propose to make any offering of securities. Applicant will continue to operate as a private investment fund in reliance on section 3(c)(1) of the Act until final payment in liquidation of its remaining assets.

Filing Dates: The application was filed on November 13, 2012, and amended on January 4, 2013.

Applicant's Address: 452 Fifth Ave., 25th Floor, New York, NY 10018.

Dividend Growth Trust [File No. 811–9497]

Summary: Applicant seeks an order declaring that it has ceased to be an investment company. The applicant has transferred its assets to a corresponding series of Goldman Sachs Trust and, on February 27, 2012, made a final distribution to its shareholders based on net asset value. Expenses of approximately $508,974 incurred in connection with the reorganization were paid by Goldman Sachs Asset Management, L.P., investment adviser to the acquiring fund, and Dividend Asset Capital, LLC (formerly Dividend Growth Advisors, LLC), investment adviser to the applicant.

Filing Dates: The application was filed on October 4, 2012, and amended on January 16, 2013.

Applicant's Address: 58 Riverwalk Blvd., Building 2, Suite A, Ridgeland, SC 29936.

Fifth Third Funds [File No. 811–5669]

Summary: Applicant seeks an order declaring that it has ceased to be an investment company. Applicant has transferred the assets of four of its series to series of Money Market Obligations Trust and, on September 7, 2012, made final distributions to shareholders of those series based on net asset value. Applicant has transferred the assets of its remaining series to series of Touchstone Investment Trust, Touchstone Funds Group Trust and Touchstone Strategic Trust and, on September 10, 2012, made final distributions to shareholders of those series based on net asset value. Expenses of $1,499,259 incurred in connection with the reorganization were paid by Fifth Third Asset Management, Inc., applicant's investment adviser, and by Touchstone Advisors, Inc. and Federated Investors, Inc., each an investment adviser to certain acquiring funds.

Filing Dates: The application was filed on November 9, 2012, and amended on January 17, 2013.

Applicant's Address: 38 Fountain Square Plaza, Cincinnati, OH 45263.

Integrity Fund of Funds Inc. [File No. 811–8824]

Summary: Applicant seeks an order declaring that it has ceased to be an investment company. On December 21, 2012, applicant made a liquidating distribution to its shareholders, based on net asset value. Applicant incurred no expenses in connection with the liquidation.

Filing Date: The application was filed on January 4, 2013.

Applicant's Address: 1 Main St. North, Minot, ND 58703.

Legg Mason Capital Management Value Trust Inc. [File No. 811–3380]; Legg Mason Capital Management Special Investment Trust Inc. [File No. 811–4451]; Legg Mason Capital Management Growth Trust Inc. [File No. 811–8966]

Summary: Each applicant seeks an order declaring that it has ceased to be an investment company. Applicants have transferred their assets to corresponding series of Legg Mason Global Asset Management Trust, and on February 29, 2012, made final distributions to their shareholders based on net asset value. Expenses of approximately $60,852, $21,282 and $7,359, respectively, incurred in connection with the reorganizations were paid by each applicant.

Filing Dates: The application was filed on September 25, 2012, and amended on January 23, 2013.

Applicants' Address: 100 International Dr., 7th Floor, Baltimore, MD 21202.

Delaware Group Equity Funds III [File No. 811–1485]

Summary: Applicant seeks an order declaring that it has ceased to be an investment company. Applicant has transferred its asset to a series of Voyager Mutual Funds III, and on October 22, 2010, made a final distribution to its shareholders based on net asset value. Expenses of approximately $208,564 incurred in connection with the reorganization were paid by applicant, the acquiring fund and Delaware Management Company, applicant's investment adviser.

Filing Dates: The application was filed on November 20, 2012, and amended on January 24, 2013.

Applicant's Address: 2005 Market St., Philadelphia, PA 19103–7094.

For the Commission, by the Division of Investment Management, pursuant to delegated authority.

Kevin M. O'Neill,

Deputy Secretary.

[FR Doc. 2013–02149 Filed 1–31–13; 8:45 am]

BILLING CODE 8011–01–P

SECURITIES AND EXCHANGE COMMISSION

[Release No. 34–68743; File No. SR–CBOE–2013–009]

Self-Regulatory Organizations; Chicago Board Options Exchange, Incorporated; Notice of Filing and Immediate Effectiveness of a Proposed Rule Change Relating to Minimum Volume Orders

January 28, 2013.

Pursuant to Section 19(b)(1) of the Securities Exchange Act of 1934 (the ''Act''),[1] and Rule 19b–4 thereunder,[2] notice is hereby given that on January 16, 2013, Chicago Board Options Exchange, Incorporated (the ''Exchange'' or ''CBOE'') filed with the Securities and Exchange Commission (the ''Commission'') the proposed rule change as described in Items I, II, and III below, which Items have been prepared by the Exchange. The Commission is publishing this notice to solicit comments on the proposed rule change from interested persons.

I. Self-Regulatory Organization's Statement of the Terms of the Substance of the Proposed Rule Change

The Exchange proposes to amend its rules to codify the ''Minimum Volume Order.'' The text of the proposed rule change is provided below. (additions are *italicized;* deletions are [bracketed])

* * * * *

Chicago Board Options Exchange, Incorporated Rules

* * * * *

Rule 6.44. Bids and Offers in Relation to Units of Trading

* * * * *

* * * Interpretations and Policies:

* * * * *

.05 A minimum volume order bid or offer shall be deemed to have been made for the full size of the order or any lesser number of option contracts that is at least equal to the minimum volume specified. Minimum volume orders and bids and offers made on a minimum volume basis shall be deemed to be all-or-none for purposes of Interpretations and Polices .01 and .03 above. To the extent available pursuant to Rule 6.53, minimum volume orders may only be made available by the Exchange for open outcry trading.

* * * * *

Rule 6.53. Certain Types of Orders Defined

One or more of the following order types may be made available on a class-by-class basis. Certain order types may not be made available for all Exchange systems. The classes and/or systems for which the order types shall be available will be as provided in the Rules, as the context may indicate, or as otherwise specified via Regulatory Circular.

(a)–(v) *No changes.*

(w) Minimum Volume Order. A minimum volume order is an order represented in open outcry for which an execution must at least equal the minimum volume specified. To the extent there is any remaining balance of a minimum volume order after the minimum volume is executed, the remainder will no longer have a minimum fill contingency and will be represented, in open outcry or electronically, unless cancelled by the customer. A minimum volume order that has a minimum volume size equal to the full size of the original order will be considered an all-or-none order as described in Rule 6.53(i).

* * * * *

[1] 15 U.S.C. 78s(b)(1).

[2] 17 CFR 240.19b–4.

The text of the proposed rule change is also available on the Exchange's Web site (*http://www.cboe.com/AboutCBOE/CBOELegalRegulatoryHome.aspx),* at the Exchange's Office of the Secretary, and at the Commission.

II. Self-Regulatory Organization's Statement of the Purpose of, and Statutory Basis for, the Proposed Rule Change

In its filing with the Commission, the Exchange included statements concerning the purpose of and basis for the proposed rule change and discussed any comments it received on the proposed rule change. The text of these statements may be examined at the places specified in Item IV below. The Exchange has prepared summaries, set forth in sections A, B, and C below, of the most significant aspects of such statements.

A. Self-Regulatory Organization's Statement of the Purpose of, and Statutory Basis for, the Proposed Rule Change

1. Purpose

The Exchange is proposing to add new paragraph (w) to Exchange Rule 6.53, *Certain Types of Orders Defined,* to codify an open outcry order type, the ''Minimum Volume Order.'' Because of the complexity of programming to make this order available electronically, this order type is currently only supported for routing to, and utilized on, the Exchange's trading floor for open outcry trading,[3] and, thus, the Exchange is proposing to harmonize its Rules with the current functionality and practice.

The proposed definition of a Minimum Volume Order is similar to an existing definition in the Exchange's Screen-Based Trading rules.[4] In the proposed language, a Minimum Volume Order is an order represented in open outcry for which an execution must at least equal the minimum volume specified. To the extent there is a remaining balance of the original order after the minimum volume amount has been executed, the remainder of the order will no longer have any minimum volume contingency and will be represented in open outcry or electronically unless cancelled by the customer. The proposed language also notes that a Minimum Volume Order that has a minimum volume size equivalent to the full size of the original order would be considered an All-or-None Order as described in Rule 6.53(i).[5]

For example, assume a Trading Permit Holder (''TPH'') represents an order to buy 50 contracts at $10.00 that is a Minimum Volume Order with a minimum fill size of 30. This order can only execute if at least 30 contracts of the order would trade against other trading interest. In this scenario, if a Floor Broker represents the Minimum Volume Order to buy in open outcry and another order or quote for 30 contracts were offered to sell against it, as the minimum value was met, 30 contracts of the Minimum Volume Order to buy would execute against the sell order/quote and the remaining 20 contracts of the Minimum Volume Order to buy would be represented on the Exchange's trading floor or electronically unless cancelled by the customer. In the same example, if orders and/or quotes for only 10 contracts were offered to sell against the Minimum Volume Order, there would be no trade because the minimum size of 30 contracts would not be satisfied.

In the case where the minimum volume size specified is equivalent to the total volume of the order, then the order will be considered the same as an All-or-None Order as specified in Exchange Rule 6.53(i). In the above example, if the order entered to buy was a Minimum Value [sic] Order for 50 contracts with a minimum quantity of 50 contracts then the order would be considered an All-or-None Order as described in Rule 6.53(i), and, as such, the entered order would only execute if the 50 contracts could be executed in its entirety.

The Exchange is also proposing to amend Exchange Rule 6.44, *Bids and Offers in Relation to Units of Trading,* to address Minimum Volume Orders. Rule 6.44, in relevant part, provides that subject to certain provisions in the Exchange rules, bids and offers made on the floor are deemed to be for one option contract unless a specific number is expressed in the bid or offer. A bid or offer for more than one option contract which is not made on an All-or-None [sic] are deemed to be for that amount or any lesser number of option contracts. An All-or-None bid or offer is deemed to be made only for the amount stated. Proposed new Interpretation and Policy .05 to Rule 6.44 will provide that, to the extent that the Exchange determines to make the Minimum Volume Order type available,[6] a Minimum Volume Order bid or offer would be deemed to have been made for the full size of the order or any lesser number of option contracts that is at least equal to the minimum volume specified.[7]

In addition, a Minimum Volume Order would be deemed to be an All-or-None Order for purposes of certain other provisions of Rule 6.44. The particular provisions are Interpretations and Policies .01 and .03 of Rule 6.44.[8] Interpretation and Policy .01 of Rule 6.44 provides the following: (i) A bid or offer may be made and transacted on an All-or-None basis if the All-or-None bid or offer represents the only bid or offer available at the best price in the market at the time the All-or-None bid or offer is executed;[9] (ii) an All-or-None order may not be crossed with another All-or-None order unless all bids or offers at the same price at which the cross is to be effected have been filled; and (iii) if two or more All-or-None bids or offers represent the only bids or offers at the best price in the market, priority shall be afforded to such All-or-None bids or offers in the sequence in which they are made. Interpretation and Policy .03 provides that the Exchange may restrict the entry of All-or-None Orders in one or more classes or series of options whenever, in its judgment, the interests of maintaining a fair and orderly market are best served. Proposed new Interpretation and Policy .05 to Rule 6.44 will reflect the applicability of

[3] Please note the Exchange may decide to introduce this order type electronically but such action would be subject to a separate rule change filing. The Exchange notes that it currently supports various order types that by their nature or terms may only be available for open outcry trading (*e.g.,* Not Held Orders) or may only be available for electronic trading (*e.g.,* Reserve Orders). *See, e.g.,* Exchange Rule 6.53(g) and (t).

[4] *See* Exchange Rule 43.2(a)(9)(E), which defines a ''Minimum Volume Order'' as ''* * * an order where the fill should be at least equal to the minimum volume specified, which is an amount less than the total volume of the order.'' The Exchange does not currently trade options pursuant to its Screen-Based Trading Rules (Chapters XL–XLIX).

[5] Under Rule 6.53(i), an All-or-None Order is currently defined as ''* * * a market or limit order which is to be executed in its entirety or not at all.''

[6] The introductory paragraph to Rule 6.53 currently provides that one or more of the identified order types may be made available on a class-by-class basis, and certain order types may not be made available for all Exchange Systems. The introductory paragraph to Rule 6.53 also provides that the classes and/or systems for which the order types shall be available will be as provided in the Rules, as the context may indicate, or as otherwise specified via Regulatory Circular.

[7] By comparison, for example, as noted above an all-or-none bid or offer is deemed to be made only for the amount stated. *See* Rule 6.44.

[8] The Exchange notes that Interpretation and Policy .02 relates to All-or-None orders in the Exchange's electronic book, and because Minimum Volume Orders are only available in open outcry trading, this provision is not applicable to Minimum Volume Orders.

[9] In other words, a Minimum Volume Order would, like an All-or-None Order, yield priority to all other interest at the same price on the trading floor.

these two provisions to Minimum Volume Orders.[10]

2. Statutory Basis

The Exchange believes the proposed rule change is consistent with the Securities Exchange Act of 1934 (the ''Act'') and the rules and regulations thereunder applicable to the Exchange and, in particular, the requirements of Section 6(b) of the Act.[11] Specifically, the Exchange believes the proposed rule change is consistent with the Section 6(b)(5)[12] requirements that the rules of an exchange be designed to prevent fraudulent and manipulative acts and practices, to promote just and equitable principles of trade, to foster cooperation and coordination with persons engaged in regulating, clearing, settling, processing information with respect to, and facilitation [sic] transactions in securities, to remove impediments to and perfect the mechanism of a free and open market and a national market system, and, in general, to protect investors and the public interest. Additionally, the Exchange believes the proposed rule change is consistent with the Section 6(b)(5)[13] requirement that the rules of an exchange not be designed to permit unfair discrimination between customers, issuers, brokers, or dealers.

In particular, the Exchange believes the addition of Rules 6.44.05 and 6.53(w) promotes just and equitable principles of trading by aligning the text of the rules with the actual functionality, which is currently available in open outcry. By updating the text of the Exchange's rules to describe the orders already supported by the Exchange, the proposed rule change is attempting to harmonize the functionality with the text of the Exchange Rules and is thereby promoting clarity and eliminating confusion. In addition, the proposed language alerts TPHs of the functionality of the order, and, thus, allows investors to use the order type, to the extent made available by the Exchange, with full knowledge of how the order type will function.

The Exchange notes that the proposed Minimum Volume Order type definition is similar to an existing order type in the Exchange's Screen-Based Trading Rules.[14] Additionally, the Exchange notes that the proposed order type is similar to order types available on other markets, including on the NASDAQ OMX PHLX LLC (''PHLX'')[15] and on the International Securities Exchange (''ISE'').[16]

B. Self-Regulatory Organization's Statement on Burden on Competition

CBOE does not believe that the proposed rule change will impose any burden on competition that is not necessary or appropriate in furtherance of the purposes of the Act. Specifically, the Exchange believes the proposed rule change will not impose any burden because the Exchange is merely harmonizing its Rules with current functionality and practice. Further, CBOE believes that the proposed rule change will relieve any burden on, or otherwise promote, competition because this order type is currently offered by other Exchanges. Thus, clarifying the Exchange rules would give further authority to compete with other exchanges currently offering the order type.

C. Self-Regulatory Organization's Statement on Comments on the Proposed Rule Change Received From Members, Participants, or Others

The Exchange neither solicited nor received comments on the proposed rule change.

III. Date of Effectiveness of the Proposed Rule Change and Timing for Commission Action

Because the foregoing proposed rule change does not:

A. Significantly affect the protection of investors or the public interest;

B. Impose any significant burden on competition; and

C. Become operative for 30 days from the date on which it was filed, or such shorter time as the Commission may designate, it has become effective pursuant to Section 19(b)(3)(A) of the Act[17] and Rule 19b–4(f)(6)[18] thereunder. At any time within 60 days of the filing of the proposed rule change, the Commission summarily may temporarily suspend such rule change if it appears to the Commission that such action is necessary or appropriate in the public interest, for the protection of investors, or otherwise in furtherance of the purposes of the Act.

IV. Solicitation of Comments

Interested persons are invited to submit written data, views, and arguments concerning the foregoing, including whether the proposed rule change is consistent with the Act. Comments may be submitted by any of the following methods:

Electronic Comments

- Use the Commission's Internet comment form (*http://www.sec.gov/rules/sro.shtml*); or
- Send an email to *rule-comments@sec.gov.* Please include File Number SR–CBOE–2013–009 on the subject line.

Paper Comments

- Send paper comments in triplicate to Elizabeth M. Murphy, Secretary, Securities and Exchange Commission, 100 F Street NE., Washington, DC 20549–1090.

All submissions should refer to File Number SR–CBOE–2013–009. This file number should be included on the subject line if email is used. To help the Commission process and review your comments more efficiently, please use only one method. The Commission will post all comments on the Commission's Internet Web site (*http://www.sec.gov/rules/sro.shtml).* Copies of the submission, all subsequent amendments, all written statements with respect to the proposed rule change that are filed with the Commission, and all written communications relating to the proposed rule change between the Commission and any person, other than those that may be withheld from the public in accordance with the provisions of 5 U.S.C. 552, will be available for Web site viewing and printing in the Commission's Public Reference Room, 100 F Street NE., Washington, DC 20549 on official business days between the hours of 10:00 a.m. and 3:00 p.m. Copies of such filing also will be available for inspection and copying at the principal

[10] Specifically, proposed new Interpretation and Policy .05 would also provide that Minimum Volume Orders and bids and offers made on a Minimum Volume basis shall be deemed to be All-or-None for purposes of Interpretations and Policies .01 and .03 of Rule 6.44. This proposed Interpretation and Policy .05 is similar to existing Interpretation and Policy .04 to Rule 6.44, which provides that Fill-or-Kill orders and bids or offers made on a Fill-or-Kill basis shall be deemed to be All-or-None for purposes of Rule 6.44.

[11] 15 U.S.C. 78f(b).

[12] 15 U.S.C. 78f(b)(5).

[13] *Id.*

[14] *See* Exchange Rule 43.2(a)(9)(E).

[15] *See* PHLX Rule 3301(f)(5), which provides that ''Minimum Quantity Orders'' are orders that require ''a specified minimum quantity of shares be obtained, or the order is cancelled. Minimum Quantity Orders may only be entered with a time-in-force designation of System Hours Immediate or Cancel.''

[16] *See* ISE Rule 715(l) which defines a ''Minimum Quantity Order'' as one that ''is available for partial execution, but each partial execution must be for a specified number of contracts or greater.''

[17] 15 U.S.C. 78s(b)(3)(A).

[18] 17 CFR 240.19b–4(f)(6). As required under Rule 19b–4(f)(6)(iii), the Exchange provided the Commission with written notice of its intent to file the proposed rule change, along with a brief description and the text of the proposed rule change, at least five business days prior to the date of filing of the proposed rule change or such shorter time as designated by the Commission.

offices of the Exchange. All comments received will be posted without change; the Commission does not edit personal identifying information from submissions. You should submit only information that you wish to make available publicly. All submissions should refer to File Number SR–CBOE–2013–009, and should be submitted on or before February 22, 2013.

For the Commission, by the Division of Trading and Markets, pursuant to delegated authority.[19]

Kevin M. O'Neill,

Deputy Secretary.

[FR Doc. 2013–02187 Filed 1–31–13; 8:45 am]

BILLING CODE 8011–01–P

SECURITIES AND EXCHANGE COMMISSION

[Release No. 34–68740; File No. SR–ISE–2013–07]

Self-Regulatory Organizations; International Securities Exchange, LLC; Notice of Filing of Proposed Rule Change To Amend the International Securities Exchange, LLC Amended and Restated Constitution

January 28, 2013.

Pursuant to Section 19(b)(1) of the Securities Exchange Act of 1934 (''Exchange Act'')[1] and Rule 19b–4 thereunder,[2] notice is hereby given that on January 18, 2013, the International Securities Exchange, LLC (''Exchange'' or ''ISE'') filed with the Securities and Exchange Commission (''Commission'') the proposed rule change as described in Items I and II below, which items have been prepared by the Exchange. The Commission is publishing this notice to solicit comments on the proposed rule change from interested persons.

I. Self-Regulatory Organization's Statement of the Terms of the Substance of the Proposed Rule Change

The Exchange proposes to amend its Amended and Restated Constitution[3] (the ''Constitution'') to: (i) Declassify the Non-Industry Directors (including the Public Directors) of the Board; (ii) change the term of the Non-Industry Directors (including the Public Directors) and the Former Employee Director to a one (1) year term, subject to re-election; and (iii) eliminate the three-term limit for the Former Employee Director. Currently, Section 3.2(c) of the Constitution requires, in part, that Non-Industry Directors (including the Public Directors)[4] and Exchange Directors[5] be classified into two classes designated as Class I and Class II directors, and that all Directors (including the Former Employee Director)[6] serve two (2) year terms, subject to re-election. The text of the proposed rule change is available on the Exchange's Web site *www.ise.com,* at the principal office of the Exchange, and at the Commission's Public Reference Room.

II. Self-Regulatory Organization's Statement of the Purpose of, and the Statutory Basis for, the Proposed Rule Change

In its filing with the Commission, the Exchange included statements concerning the purpose of, and basis for, the proposed rule change and discussed any comments it received on the proposed rule change. The text of these statements may be examined at the places specified in Item IV below. The self-regulatory organization has prepared summaries, set forth in Sections A, B and C below, of the most significant aspects of such statements.

A. Self-Regulatory Organization's Statement of the Purpose of, and the Statutory Basis for, the Proposed Rule Change

1. Purpose

The purpose of this proposed rule change is to amend the Constitution: (i) To declassify the Non-Industry Directors (including the Public Directors) of the Board; (ii) to change the term of the Non-Industry Directors (including the Public Directors) and the Former Employee Director to a one (1) year term, subject to re-election; and (iii) eliminate the three-term limit for the Former Employee Director. Currently, Section 3.2(c) of the Constitution requires, in part, that Non-Industry Directors (including the Public Directors)[7] and Exchange Directors[8] be classified into two classes designated as Class I and Class II directors, and that all Directors (including the Former Employee Director)[9] serve two (2) year terms, subject to re-election.

The Exchange proposes that Section 3.2(c) of the Constitution be amended to remove any references to Class I directors or Class II directors as such terms relate to Non-Industry Directors (including the Public Directors), and state that the Non-Industry Directors (including the Public Directors) would hold office for a one (1) year term, subject to re-election, as follows:

> ''[t]he Non-Industry Directors and the Public Directors shall hold office for a term expiring at the annual meeting of the Sole LLC Member and holders of Exchange Rights held in the first year following the year of their election, and until their successors are elected and qualified.''

For the avoidance of doubt, Non-Industry Directors (including the Public Directors) would continue to be elected by the Sole LLC Member at each annual meeting of the Sole LLC Member and holders of Exchange Rights in accordance with Section 3.2 of the Constitution.

The Exchange further proposes to modify the term of the Former Employee Director so that any such director shall hold office for a one (1) year term, subject to re-election, and to make such corresponding technical changes to the applicable parts of Section 3.2(c). Furthermore, the Exchange proposes to eliminate the three-term limit for the Former Employee Director.[10] Upon modification of the two (2) year term to a one (1) year term, the Former Employee Director would qualify to become a Non-Industry Director after serving on the Board of Directors for three (3) years as he/she would no longer have been employed by the

---

[19] 17 CFR 200.30–3(a)(12).

[1] 15 U.S.C. 78s(b)(1).

[2] 17 CFR 240.19b–4.

[3] Amended and Restated Constitution of International Securities Exchange, LLC (last amended December 28, 2007).

[4] Section 3.2(b)(iv) of the Constitution requires that the Board be composed of eight (8) Non-Industry Directors (at least two (2) of which are Public Directors) elected by the Sole LLC Member.

[5] Section 3.2(b)(i)–(iii) of the Constitution requires that the Board be composed of six (6) Exchange Directors elected by the holders of Exchange Rights.

[6] Section 3.2(b)(vi) of the Constitution allows the Sole LLC Member, in its sole and absolute discretion, [sic] elect one (1) additional director who shall meet the requirements of ''Non-Industry Directors,'' except that such person was employed by the Exchange at any time during the three (3) year period prior to his or her initial election.

[7] Section 3.2(b)(iv) of the Constitution requires that the Board be composed of eight (8) Non-Industry Directors (at least two (2) of which are Public Directors) elected by the Sole LLC Member.

[8] Section 3.2(b)(i)–(iii) of the Constitution requires that the Board be composed of six (6) Exchange Directors elected by the holders of Exchange Rights.

[9] Section 3.2(b)(vi) of the Constitution allows the Sole LLC Member, in its sole and absolute discretion, elect one (1) additional director who shall meet the requirements of ''Non- Industry Directors,'' except that such person was employed by the Exchange at any time during the three (3) year period prior to his or her initial election.

[10] Section 3.2(e)(iv) of the Constitution provides that a Former Employee Director may not serve on the Board of Directors for more than three (3) consecutive terms. Any such director may be eligible for election as a director following a two-year hiatus from service on the Board of Directors, provided, that he or she meets the director qualifications pursuant to Section 3.2(b).

Exchange in the previous three (3) year period prior to his or her initial election. As such, there is no need for the three-term limit upon modification of the two (2) year term to a one (1) year term.

ISE believes that the declassification of the Non-Industry Directors (including the Public Directors), and the institution of a one year term for Non-Industry Directors (including the Public Directors) and the Former Employee Director, subject to reelection, would allow the Exchange to align its Board structure in accordance with corporate governance best practices guidelines which advocate the repeal of classified/staggered boards and the annual elections of directors, including, but not limited to, the Institutional Shareholder Services Proxy Voting Guidelines, the CalPERS Core Principles of Accountable Corporate Governance, the TIAA–CREF Policy Statement on Corporate Governance, and the AFI–CIO Proxy Voting Guidelines. The Exchange notes that just because it has one shareholder, the Sole LLC Member, as opposed to many shareholders in a public company, the Exchange nonetheless believes that the adherence to the aforementioned corporate governance best practices guidelines are beneficial to the Exchange in that it provides for flexibility, transparency, and accountability for the sole shareholder, and ultimately for the members of the Exchange and the customers of the Exchange members. Specifically, the Exchange believes that the proposed modifications to the Constitution would provide it with the most flexibility to structure the Board of Directors in a way that is most effective for: (i) Attracting and keeping Non-Industry Directors (including Public Directors) and the Former Employee Director who provide valuable insight and knowledge to the Board; (ii) providing the Sole LLC Member with the ability to evaluate and hold Non-Industry Directors (including Public Directors) and the Former Employee Director accountable on an annual basis; and (iii) removing underperforming, inactive, or ineffective Non-Industry Directors (including Public Directors) and the Former Employee Director who may be detrimental to the enhancement of long-term corporate value.

Notwithstanding any of the foregoing, the Exchange is not proposing any changes to the current requirements in the Constitution which specify that Exchange Directors serve two (2) year terms in a classified/staggered manner as the Exchange believes that the current structure continues to be an effective and practical mechanism for ensuring continuity and fair representation of the Exchange's membership on the Board. Exchange Directors represent the membership of the Exchange on the Board of Directors and because of the direct connection between the Exchange's business and each Exchange Director's underlying business, Exchange Directors provide a very different perspective from the Non-Industry Directors (including Public Directors) and the Former Employee Director. Specifically, Exchange Directors not only have an interest in seeing certain Exchange initiatives through to implementation, but are uniquely positioned to offer valuable feedback on such initiatives directly to the Board of Directors. Given the regulatory nature of the Exchange's business and the extended period of time necessary to see initiatives through to implementation, it is the Exchange's belief and experience that a term longer than one (1) year is necessary for Exchange Directors to achieve the full benefit of participation of the Board. Furthermore, the Exchange believes that the classified structure of the Exchange Directors allows for a more consistent representation of the Exchange's membership on the Board of Directors. By never having a whole slate of new Exchange Directors join the Board at the same time, the Exchange believes that the classified structure allows incumbent Exchange Directors to provide leadership and continuity to new Exchange Directors and the Board of Directors, as a whole.

The Exchange proposes that the declassification changes to the Board of Directors be implemented through a gradual process in which each current Non-Industry Director (including the Public Directors) will serve out the remainder of his or her two (2) year term and at the end of such term, the election or re-election of such Non-Industry Director (including the Public Directors) vacancy will be for a one (1) year term. This gradual process would result in a fully declassified Board of Directors at the conclusion of the Exchange's 2014 annual meeting of the Sole LLC Member and holders of Exchange Rights.

2. Statutory Basis

The basis under the Exchange Act for this proposed rule change is the requirement under Section 6(b)(1) that an exchange be so organized so as to have the capacity to be able to carry out the purposes of the Exchange Act and to comply, and (subject to any rule or order of the Commission pursuant to Section 17(d) or 19(g)(2) of the Exchange Act) to enforce compliance by its members and persons associated with its members, with the provisions of the Exchange Act, the rules and regulations thereunder and the rules of the Exchange. The Exchange also believes this proposed rule change furthers the objective of Section 6(b)(5) that an exchange have rules that, among other things, are designed to prevent fraudulent and manipulative acts and practices, to promote just and equitable principles of trade, to foster cooperation with persons engaged in facilitating transactions in securities, to remove impediments to and perfect the mechanism of a free and open market and a national market system, and, in general, to protect investors and the public interest.

Specifically, the Exchange believes that because the proposed rule change does not modify the structure of the Exchange Directors, the Exchange continues to be organized so as to have the capacity to be able to carry out the purposes of the Exchange Act and to comply, and (subject to any rule or order of the Commission pursuant to Section 17(d) or 19(g)(2) of the Exchange Act) to enforce compliance by its members and persons associated with its members, with the provisions of the Exchange Act, the rules and regulations thereunder and the rules of the Exchange. Furthermore, aligning the structure of the Non-Industry Directors (including the Public Directors) and the Former Employee Director in accordance with corporate governance best practices guidelines would ensure that the Exchange continues to have rules that are designed to prevent fraudulent and manipulative acts and practices, to promote just and equitable principles of trade, to foster cooperation with persons engaged in facilitating transactions in securities, and to remove impediments to and perfect the mechanism of a free and open market and a national market system. In addition, the Exchange believes that the proposed rule change protects investors and the public interest by providing the most flexibility to structure the Non-Industry Directors (including the Public Directors) and the Former Employee Director in a way that is most effective for: (i) Attracting and keeping Non-Industry Directors (including Public Directors) and the Former Employee Director who provide valuable insight and knowledge to the Board; (ii) providing the Sole LLC Member with the ability to evaluate and hold Non-Industry Directors (including Public Directors) and the Former Employee Director accountable on an annual basis; and (iii) removing underperforming, inactive, or ineffective Non-Industry Directors (including Public Directors)

and the Former Employee Director who may be detrimental to the enhancement of long-term corporate value.

B. Self-Regulatory Organization's Statement on Burden on Competition

The Exchange does not believe that the proposed rule change will impose any burden on competition. Specifically, the proposed rule change only seeks to implement corporate governance best practices guidelines with respect to the structure of its Board of Directors and does not directly impact the Exchange's trading rules, its membership, or marketplace, and therefore does not implicate the competition analysis.

C. Self-Regulatory Organization's Statement on Comments on the Proposed Rule Change Received From Members, Participants, or Others

The Exchange has not solicited, and does not intend to solicit, comments on this proposed rule change. The Exchange has not received any unsolicited written comments from members or other interested parties.

III. Date of Effectiveness of the Proposed Rule Change and Timing for Commission Action

Within 45 days of the publication date of this notice or within such longer period (1) as the Commission may designate up to 45 days of such date if it finds such longer period to be appropriate and publishes its reasons for so finding or (2) as to which the self-regulatory organization consents, the Commission will:

(a) By order approve or disapprove such proposed rule change; or

(b) Institute proceedings to determine whether the proposed rule change should be disapproved.

IV. Solicitation of Comments

Interested persons are invited to submit written data, views, and arguments concerning the foregoing, including whether the proposed rule change is consistent with the Exchange Act. Comments may be submitted by any of the following methods:

Electronic Comments

- Use the Commission's Internet comment form (*http://www.sec.gov/rules/sro.shtml*); or
- Send an email to *rule-comments@sec.gov.* Please include File Number SR–ISE–2013–07 on the subject line.

Paper Comments

- Send paper comments in triplicate to Elizabeth M. Murphy, Secretary, Securities and Exchange Commission, 100 F Street NE., Washington, DC 20549–1090.

All submissions should refer to File Number SR–ISE–2013–07. This file number should be included on the subject line if email is used. To help the Commission process and review your comments more efficiently, please use only one method. The Commission will post all comments on the Commission's Internet Web site (*http://www.sec.gov/rules/sro.shtml*). Copies of the submission, all subsequent amendments, all written statements with respect to the proposed rule change that are filed with the Commission, and all written communications relating to the proposed rule change between the Commission and any person, other than those that may be withheld from the public in accordance with the provisions of 5 U.S.C. 552, will be available for Web site viewing and printing in the Commission's Public Reference Room on official business days between the hours of 10:00 a.m. and 3:00 p.m. Copies of such filing also will be available for inspection and copying at the principal offices of the Exchange. All comments received will be posted without change; the Commission does not edit personal identifying information from submissions. You should submit only information that you wish to make available publicly. All submissions should refer to File Number SR–ISE–2013–07, and should be submitted on or before February 22, 2013.

For the Commission, by the Division of Trading and Markets, pursuant to delegated authority.[11]

Kevin M. O'Neill,

Deputy Secretary.

[FR Doc. 2013–02186 Filed 1–31–13; 8:45 am]

BILLING CODE 8011–01–P

[11] 17 CFR 200.30–3(a)(12).

SECURITIES AND EXCHANGE COMMISSION

[Release No. 34–68742; File No. SR–CBOE–2013–006]

Self-Regulatory Organizations; Chicago Board Options Exchange, Incorporated; Notice of Filing and Immediate Effectiveness of Proposed Rule Change Related to Pre-Opening Information

January 28, 2013.

Pursuant to Section 19(b)(1) of the Securities Exchange Act of 1934 (the ''Act''),[1] and Rule 19b–4 thereunder,[2] notice is hereby given that on January 17, 2013, the Chicago Board Options Exchange, Incorporated (''Exchange'' or ''CBOE'') filed with the Securities and Exchange Commission (the ''Commission'') the proposed rule change as described in Items I, II, and III below, which Items have been prepared by the Exchange. The Exchange has designated the proposal as a ''non-controversial'' proposed rule change pursuant to Section 19(b)(3)(A) of the Act[3] and Rule 19b–4(f)(6) thereunder.[4] The Commission is publishing this notice to solicit comments on the proposed rule change from interested persons.

I. Self-Regulatory Organization's Statement of the Terms of Substance of the Proposed Rule Change

The Exchange proposes to amend Rule 6.2B, *Hybrid Opening System (''HOSS''),* regarding the dissemination of certain pre-opening information. The text of the proposed rule change is available on the Exchange's Web site (*www.cboe.org/Legal*), at the Exchange's Office of the Secretary and at the Commission.

II. Self-Regulatory Organization's Statement of the Purpose of, and Statutory Basis for, the Proposed Rule Change

In its filing with the Commission, the Exchange included statements concerning the purpose of and basis for the proposed rule change and discussed any comments it received on the proposed rule change. The text of those statements may be examined at the places specified in Item IV below. The Exchange has prepared summaries, set forth in sections A, B, and C below, of the most significant parts of such statements.

A. Self-Regulatory Organization's Statement of the Purpose of, and Statutory Basis for, the Proposed Rule Change

1. Purpose

The purpose of this filing is to update the provisions of Rule 6.2B regarding the dissemination of certain pre-opening information. In relevant part, the current provisions of Rule 6.2B(a)(ii) provide that, during the pre-opening period, at specified intervals of time that will be announced to Trading Permit Holders,[5]

[1] 15 U.S.C. 78s(b)(1).

[2] 17 CFR 240.19b–4.

[3] 15 U.S.C. 78s(b)(3)(A).

[4] 17 CFR 240.19b–4(f)(6).

[5] Pursuant to Rule 6.5B.05 [sic], all pronouncements regarding determinations by the

CBOE's Hybrid Trading System (the ''System'') will disseminate to market participants (as defined in Rule 6.45A, *Priority and Allocation of Equity Option Trades on the CBOE Hybrid System,* and 6.45B, *Priority and Allocation of Trades in Index Options and Options on ETFs on the CBOE Hybrid System*[6]) information about resting orders in the Book that remain from the prior business day and any orders and quotes submitted before the opening, including the expected opening price (''EOP'') and expected opening size (''EOS'') given the current resting orders and quotes. The purpose of the proposed rule change is to update the text to provide that such pre-opening information will be disseminated to all users that have elected to receive such information (and to remove the existing reference to such pre-opening information being disseminated to market participants). As revised, the rule text will reflect that any user—whether or not a ''market participant''—may receive pre-opening information.[7] This revision will update the rule text to accurately reflect the Exchange's current practice of making such pre-opening information available to any user—whether or not a ''market participant.''[8]

The Exchange believes that the dissemination of this pre-opening information to all users that elect to receive such information increases opportunities for all types of participants (*e.g.,* public customers, broker-dealers and market-makers) to participate in opening rotations. This broader participation could lead to more robust competition because more users may participate in opening rotations, which may result in better prices for customers.

2. Statutory Basis

The Exchange believes that the proposed rule change is consistent with Section [sic] the Act and the rules and regulations under the Act, in general, and furthers the objectives of Section 6(b)(5),[9] in particular, in that it is designed to prevent fraudulent and manipulative acts and practices, to promote just and equitable principles of trade, to foster cooperation and coordination with persons engaged in facilitating transactions in securities, and to remove impediments to and perfect the mechanisms of a free and open market and a national market system, and, in general, to protect investors and the public interest.

The Exchange believes that the proposed rule change is consistent with the Act and the rules and regulations under the Act, in general, and furthers the objectives of Section 6(b)(5),[10] in particular, in that it is designed to prevent fraudulent and manipulative acts and practices, to promote just and equitable principles of trade, to foster cooperation and coordination with persons engaged in facilitating transactions in securities, and to remove impediments to and perfect the mechanisms of a free and open market and a national market system, and, in general, to protect investors and the public interest. [sic]

The proposed rule change will update the rule text to accurately reflect the Exchange's current practice of making pre-opening information available to any user—whether or not a ''market participant.'' The Exchange believes that the dissemination of the pre-opening information to all users that elect to receive such information increases opportunities for all types of participants (*e.g.,* public customers, broker-dealers and market-makers) to participate in opening rotations. This broader participation could lead to more robust competition because more users may participate in opening rotations, which may result in better prices for customers.

B. Self-Regulatory Organization's Statement on Burden on Competition

The Exchange does not believe that the proposed rule change will impose any burden on competition that is not necessary or appropriate in furtherance of the purposes of the Act. As noted above, the Exchange believes that the dissemination of the pre-opening information to all users that elect to receive such information increases opportunities for all types of participants (*e.g.,* public customers, broker-dealers and market-makers) to participate in opening rotations. This broader participation could lead to more robust competition because more users may participate in opening rotations, which may result in better prices for customers. The Exchange also believes that the data will help attract new users and new order flow to the Exchange, thereby improving the Exchange's ability to compete in the market for options order flow and executions. Finally, the Exchange notes that at least one other exchange, the NASDAQ Options Market (''NOM''), makes similar information about pre-opening information available to non-members.[11]

C. Self-Regulatory Organization's Statement on Comments on the Proposed Rule Change Received From Members, Participants, or Others

The Exchange neither solicited nor received comments on the proposal.

III. Date of Effectiveness of the Proposed Rule Change and Timing for Commission Action

Because the proposed rule change does not (i) Significantly affect the protection of investors or the public interest; (ii) impose any significant burden on competition; and (iii) become operative for 30 days from the date on which it was filed, or such shorter time as the Commission may designate if consistent with the protection of investors and the public interest, the proposed rule change has become effective pursuant to Section 19(b)(3)(A) of the Act[12] and Rule 19b–4(f)(6)(iii) thereunder.[13] At any time within 60

Exchange pursuant to Rule 6.2B and the Interpretations and Policies thereunder will be announced to Trading Permit Holders via Regulatory Circular.

[6] *See* introductory text to Rule 6.45A (which provides that the term ''market participant'' refers to a Market-Maker, a Designated Primary Market-Maker (''DPM''), an Electronic DPM (''e-DPM''), and a floor broker or a PAR Official representing orders in the trading crowd) and Rule 6.45B (which provides that the term ''market participant'' refers to a Market-Maker, a DPM or LMM, an e-DPM with an appointment in the subject class, and a floor broker or PAR Official representing orders in the trading crowd).

[7] The Exchange is also proposing to replace a reference from the specified intervals of time being ''announced to Trading Permit Holders'' to being ''determined by the Exchange.'' The Exchange notes that all pronouncements regarding determinations by the Exchange pursuant to Rule 6.2B and the Interpretations and Policies thereunder will be announced to Trading Permit Holders via Regulatory Circular. *See* Rule 6.2B.05; *see also* note 5, *supra.* The Exchange also notes that Regulatory Circulars are publically available on the Exchange's Web site (*www.cboe.com*).

[8] Users may elect to receive the pre-opening data via Market Data Express, LLC (''MDX,'' an affiliate of CBOE). MDX currently makes the data available as part of the BBO Data Feed for CBOE listed options at no additional charge. *See* SR–CBOE–2013–005. In addition, for certain series, the Exchange may make certain pre-opening data available on its publically accessible Web site and/or display the information on monitors on the trading floor and through an application programming interface (''API''), each currently at no additional charge.

[9] 15 U.S.C. 78f(b)(5).

[10] 15 U.S.C. 78f(b)(5).

[11] NOM disseminates certain pre-opening order imbalance information every five seconds for a period of time prior to the open and this information is made available via subscription. *See* NOM Chapter VI, Section 8(b)(1) and Chapter XV, Section 4(e); *see also http://www.nasdaqtrader.com/trader.aspx?id=openclose.*

[12] 15 U.S.C. 78s(b)(3)(A).

[13] 17 CFR 240.19b–4(f)(6)(iii). As required under Rule 19b–4(f)(6)(iii), the Exchange provided the Commission with written notice of its intent to file the proposed rule change, along with a brief description and the text of the proposed rule

Continued

days of the filing of such proposed rule change, the Commission summarily may temporarily suspend such rule change if it appears to the Commission that such action is necessary or appropriate in the public interest, for the protection of investors, or otherwise in furtherance of the purposes of the Act.

IV. Solicitation of Comments

Interested persons are invited to submit written data, views, and arguments concerning the foregoing, including whether the proposed rule change is consistent with the Act. Comments may be submitted by any of the following methods:

Electronic Comments

- Use the Commission's Internet comment form (*http://www.sec.gov/rules/sro.shtml*); or
- Send an email to *rule-comments@sec.gov*. Please include File Number SR–CBOE–2013–006 on the subject line.

Paper Comments

- Send paper comments in triplicate to Elizabeth M. Murphy, Secretary, Securities and Exchange Commission, 100 F Street NE., Washington, DC 20549–1090.

All submissions should refer to File Number SR–CBOE–2013–006. This file number should be included on the subject line if email is used. To help the Commission process and review your comments more efficiently, please use only one method. The Commission will post all comments on the Commission's Internet Web site (*http://www.sec.gov/rules/sro.shtml*). Copies of the submission, all subsequent amendments, all written statements with respect to the proposed rule change that are filed with the Commission, and all written communications relating to the proposed rule change between the Commission and any person, other than those that may be withheld from the public in accordance with the provisions of 5 U.S.C. 552, will be available for Web site viewing and printing in the Commission's Public Reference Room, 100 F Street NE., Washington, DC 20549, on official business days between the hours of 10:00 a.m. and 3:00 p.m. Copies of the filing also will be available for inspection and copying at the principal office of the Exchange. All comments received will be posted without change; the Commission does not edit personal identifying information from submissions. You should submit only information that you wish to make available publicly. All submissions should refer to File Number SR–CBOE–2013–006 and should be submitted on or before February 22, 2013.

For the Commission, by the Division of Trading and Markets, pursuant to delegated authority.[14]

Kevin M. O'Neill,

Deputy Secretary.

[FR Doc. 2013–02148 Filed 1–31–13; 8:45 am]

BILLING CODE 8011–01–P

change, at least five business days prior to the date of filing of the proposed rule change, or such shorter time as designated by the Commission.

[14] 17 CFR 200.30–3(a)(12).

SECURITIES AND EXCHANGE COMMISSION

[Release No. 34–68741; File No. SR–C2–2013–002]

Self-Regulatory Organizations; C2 Options Exchange, Incorporated; Notice of Filing and Immediate Effectiveness of Proposed Rule Change Related to Pre-Opening Information

January 28, 2013.

Pursuant to Section 19(b)(1) of the Securities Exchange Act of 1934 (the ''Act''),[1] and Rule 19b–4 thereunder,[2] notice is hereby given that on January 17, 2013, the C2 Options Exchange, Incorporated (''Exchange'' or ''C2'') filed with the Securities and Exchange Commission (the ''Commission'') the proposed rule change as described in Items I, II, and III below, which Items have been prepared by the Exchange. The Exchange has designated the proposal as a ''non-controversial'' proposed rule change pursuant to Section 19(b)(3)(A) of the Act[3] and Rule 19b–4(f)(6) thereunder.[4] The Commission is publishing this notice to solicit comments on the proposed rule change from interested persons.

I. Self-Regulatory Organization's Statement of the Terms of Substance of the Proposed Rule Change

The Exchange is proposing to amend Rule 6.11, *Openings (and sometimes Closings),* regarding the dissemination of certain pre-opening information. The text of the proposed rule change is available on the Exchange's Web site (*http://www.c2exchange.com/Legal/RuleFilings.aspx*), at the Exchange's Office of the Secretary and at the Commission.

[1] 15 U.S.C. 78s(b)(1).

[2] 17 CFR 240.19b–4.

[3] 15 U.S.C. 78s(b)(3)(A).

[4] 17 CFR 240.19b–4(f)(6).

II. Self-Regulatory Organization's Statement of the Purpose of, and Statutory Basis for, the Proposed Rule Change

In its filing with the Commission, the Exchange included statements concerning the purpose of and basis for the proposed rule change and discussed any comments it received on the proposed rule change. The text of those statements may be examined at the places specified in Item IV below. The Exchange has prepared summaries, set forth in sections A, B, and C below, of the most significant parts of such statements.

A. Self-Regulatory Organization's Statement of the Purpose of, and Statutory Basis for, the Proposed Rule Change

1. Purpose

The purpose of this filing is to update the provisions of Rule 6.11 regarding the dissemination of certain pre-opening information. In relevant part, the current provisions of Rule 6.11(a)(2) provide that, during the pre-opening period, at specified intervals of time that will be announced to Participants,[5] the C2 System will disseminate to Participants[6] information about resting orders in the book that remain from the prior business day and any orders and quotes submitted before the opening, including the expected opening price (''EOP'') and expected opening size (''EOS'') given the current resting orders and quotes. The purpose of the proposed rule change is to update the text to provide that such pre-opening information will be disseminated to all users that have elected to receive such information (and to remove the existing reference to such pre-opening information being disseminated to Participants). As revised, the rule text will reflect that any user—whether or not a Participant—may receive pre-opening information.[7] This revision will

[5] Pursuant to Rule 6.11.02, all pronouncements regarding determinations by the Exchange pursuant to Rule 6.11 and the Interpretations and Policies thereunder will be announced to Participants via Regulatory Circular.

[6] The term ''Participant'' means a Permit Holder. The term ''Permit Holder'' means the Exchange recognized holder of a Trading Permit. A Permit Holder is also known as a Trading Permit Holder under the C2 Bylaws. Permit Holders are deemed ''members'' under the Act. See C2 Rule 1.1, *Definitions.*

[7] The Exchange is also proposing to replace a reference from the specified intervals of time being ''announced to Participants'' to being ''determined by the Exchange.'' The Exchange notes that all pronouncements regarding determinations by the Exchange pursuant to Rule 6.11 and the Interpretations and Policies there under will be announced to Participants via Regulatory Circular. *See* C2 Rule 6.11.02; *see also* note 5, *supra.* The

update the rule text to accurately reflect the Exchange's current practice of making such pre-opening information available to any user.[8]

The Exchange believes that the dissemination of this pre-opening information to all users that elect to receive such information increases opportunities for all types of market participants (*e.g.,* public customers, broker-dealers and market-makers) to participate in opening rotations. This broader participation could lead to more robust competition because more users may participate in opening rotations, which may result in better prices for customers.

2. Statutory Basis

The Exchange believes that the proposed rule change is consistent with the Act and the rules and regulations under the Act, in general, and furthers the objectives of Section 6(b)(5),[9] in particular, in that it is designed to prevent fraudulent and manipulative acts and practices, to promote just and equitable principles of trade, to foster cooperation and coordination with persons engaged in facilitating transactions in securities, and to remove impediments to and perfect the mechanisms of a free and open market and a national market system, and, in general, to protect investors and the public interest.

The proposed rule change will update the rule text to accurately reflect the Exchange's current practice of making pre-opening information available to any user—whether or not a Participant. The Exchange believes that the dissemination of the pre-opening information to all users that elect to receive such information increases opportunities for all types of market participants (*e.g.,* public customers, broker-dealers and market-makers) to participate in opening rotations. This broader participation could lead to more robust competition because more users may participate in opening rotations, which may result in better prices for customers.

B. Self-Regulatory Organization's Statement on Burden on Competition

The Exchange does not believe that the proposed rule change will impose any burden on competition that is not necessary or appropriate in furtherance of the purposes of the Act. As noted above, the Exchange believes that the dissemination of the pre-opening information to all users that elect to receive such information increases opportunities for all types of participants (*e.g.,* public customers, broker-dealers and market-makers) to participate in opening rotations. This broader participation could lead to more robust competition because more users may participate in opening rotations, which may result in better prices for customers. The Exchange also believes that the data will help attract new users and new order flow to the Exchange, thereby improving the Exchange's ability to compete in the market for options order flow and executions. Finally, the Exchange notes that at least one other exchange, the NASDAQ Options Market (''NOM''), makes similar information about pre-opening information available to non-members.[10]

C. Self-Regulatory Organization's Statement on Comments on the Proposed Rule Change Received From Members, Participants, or Others

The Exchange neither solicited nor received comments on the proposal.

III. Date of Effectiveness of the Proposed Rule Change and Timing for Commission Action

Because the proposed rule change does not (i) Significantly affect the protection of investors or the public interest; (ii) impose any significant burden on competition; and (iii) become operative for 30 days from the date on which it was filed, or such shorter time as the Commission may designate if consistent with the protection of investors and the public interest, the proposed rule change has become effective pursuant to Section 19(b)(3)(A) of the Act[11] and Rule 19b–4(f)(6)(iii) thereunder.[12] At any time within 60 days of the filing of such proposed rule change, the Commission summarily may temporarily suspend such rule change if it appears to the Commission that such action is necessary or appropriate in the public interest, for the protection of investors, or otherwise in furtherance of the purposes of the Act.

IV. Solicitation of Comments

Interested persons are invited to submit written data, views, and arguments concerning the foregoing, including whether the proposed rule change is consistent with the Act. Comments may be submitted by any of the following methods:

Electronic Comments

- Use the Commission's Internet comment form (*http://www.sec.gov/rules/sro.shtml*); or
- Send an email to *rule-comments@sec.gov*. Please include File Number SR–C2–2013–002 on the subject line.

Paper Comments

- Send paper comments in triplicate to Elizabeth M. Murphy, Secretary, Securities and Exchange Commission, 100 F Street NE., Washington, DC 20549–1090.

All submissions should refer to File Number SR–C2–2013–002. This file number should be included on the subject line if email is used. To help the Commission process and review your comments more efficiently, please use only one method. The Commission will post all comments on the Commission's Internet Web site (*http://www.sec.gov/rules/sro.shtml*). Copies of the submission, all subsequent amendments, all written statements with respect to the proposed rule change that are filed with the Commission, and all written communications relating to the proposed rule change between the Commission and any person, other than those that may be withheld from the public in accordance with the provisions of 5 U.S.C. 552, will be available for Web site viewing and printing in the Commission's Public Reference Room, 100 F Street, NE., Washington, DC 20549, on official business days between the hours of 10:00 a.m. and 3:00 p.m. Copies of the filing also will be available for inspection and copying at the principal office of the Exchange. All comments received will be posted without change; the Commission does not edit personal identifying information from submissions. You should submit only information that you wish to make available publicly. All submissions should refer to File Number SR–C2–

Exchange also notes that Regulatory Circulars are publically available on the Exchange's Web site (*www.c2exchange.com*).

[8] Users may elect to receive the pre-opening data via Market Data Express, LLC (''MDX,'' an affiliate of C2). MDX currently makes the data available as part of the BBO Data Feed for C2 listed options at no additional charge. *See* SR–C2–2013–001.

[9] 15 U.S.C. 78f(b)(5).

[10] NOM disseminates certain pre-opening order imbalance information every five seconds for a period of time prior to the open and this information is made available via subscription. *See* NOM Chapter VI, Section 8(b)(1) and Chapter XV, Section 4(e); *see also http://www.nasdaqtrader.com/trader.aspx?id=openclose.*

[11] 15 U.S.C. 78s(b)(3)(A).

[12] 17 CFR 240.19b–4(f)(6)(iii). As required under Rule 19b–4(f)(6)(iii), the Exchange provided the Commission with written notice of its intent to file the proposed rule change, along with a brief description and the text of the proposed rule change, at least five business days prior to the date of filing of the proposed rule change, or such shorter time as designated by the Commission.

2013–002 and should be submitted on or before February 22, 2013.

For the Commission, by the Division of Trading and Markets, pursuant to delegated authority.[13]

Kevin M. O'Neill,

Deputy Secretary.

[FR Doc. 2013–02147 Filed 1–31–13; 8:45 am]

BILLING CODE 8011–01–P

[13] 17 CFR 200.30–3(a)(12).

DEPARTMENT OF TRANSPORTATION

Federal Aviation Administration

Airport Improvement Program

AGENCY: Department of Transportation, Federal Aviation Administration.

ACTION: Invitation to comment on draft FAA Order 5100–38, Airport Improvement Program Handbook.

SUMMARY: This notice announces the request for comments on the draft of FAA Order 5100–38D, Airport Improvement Program Handbook. When finalized, this Order will replace Order 5100–38C, Airport Improvement Program Handbook, issued on June 28, 2005. This update clarifies statutory requirements, including changes to the AIP statute from the recent FAA reauthorization.

DATES: Comments must be received on or before March 18, 2013.

ADDRESSES: You can get an electronic copy of draft FAA Order 5100–38 and the comment form on the FAA Airports Web site at *http://www.faa.gov/airports/* after January 31, 2013.

You can submit comments using the AIP Draft Handbook Comment Form, using any of the following methods:

Electronic Submittal to the FAA: Go to *http://www.faa.gov/airports/* and follow the instructions for sending your comments electronically.

Mail: FAA Office of Airports, Airport Planning and Programming, Routing Symbol APP–501, 800 Independence Avenue SW., Room 619, Washington, DC 20591.

Fax: 1–202–267–5302.

Hand Delivery: To FAA Office of Airports, Airport Planning and Programming, Routing Symbol APP–501, 800 Independence Avenue SW., Room 619, Washington, DC 20591; between 9 a.m. and 4 p.m., Monday through Friday, except Federal holidays.

For more information on the notice and comment process, see the **SUPPLEMENTARY INFORMATION** section of this document. Privacy: We will post all comments we receive, without change, to *http://www.faa.gov/airports/*, including any personal information you provide.

Comments Received: To read comments received, go to *http://www.faa.gov/airports/* at any time.

FOR FURTHER INFORMATION CONTACT: Frank J. San Martin, Manager, Airport Financial Assistance Division, APP–500, Federal Aviation Administration, 800 Independence Avenue SW., Washington, DC 20591, telephone (202) 267–3181; facsimile: (202) 267–5302; email: *frank.sanmartin@faa.gov.*

SUPPLEMENTARY INFORMATION:

Availability of Documents

You can get an electronic copy of this notice, FAA Order 5100–38C, and the draft Order by visiting the FAA's Airports Web page at *http://www.faa.gov/airports/* after January 31, 2013.

Background

The Airport Improvement Program is an airport grant program, established by the Airport and Airway Improvement Act of 1982 as amended, 49 U.S.C. 47101 et seq. (AAIA). Order 5100–38C, Airport Improvement Program Handbook, issued June 28, 2005, contains instructions to FAA employees on implementing the AIP. This Order is widely used by airports, consultants and others. This draft Order will replace Order 5100–38C and supersedes most Program Guidance Letters (PGLs) issued through Fiscal Year 2012.

Since 2005, there have been substantial changes to the laws and policies relating to the AIP, including the recent FAA reauthorization bill, the FAA Modernization and Reform Act of 2012.

To incorporate these changes and provide the most useful and current program guidance to agency employees, the Office of Airport Planning and Programming, Financial Assistance Division has updated and significantly revised the Handbook to maximize its clarity. This update is a fundamental rewrite of FAA Order 5100–38C, the current version of the Airport Improvement Program Handbook. The update clarifies the different responsibilities of the FAA Office of Airports staff and those of the AIP grant sponsor. The basic Handbook includes the requirements for all grant projects and also includes appendices that can be used as a ready-reference for project-specific requirements.

Invitation for Public Comment

While the FAA generally does not request public comment on internal orders, the agency is offering this opportunity for public comment in recognition of the interest of all segments of the airport community in the AIP. The agency will consider all comments received by the closing date of the comment period in finalizing this Order. Comments received after that date may be considered if consideration will not delay agency action on the Order.

Comments must be submitted on the AIP Draft Handbook Comment Form, which is available for downloading at: *http://www.faa.gov/airports/.* Comments that are not submitted on the form may be considered only if consideration will not delay agency action on the Order.

Issued in Washington, DC, on January 23, 2013.

Frank J. San Martin,

Manager, Airports Financial Assistance Division, Office of Airport Planning and Programming.

[FR Doc. 2013–02044 Filed 1–31–13; 8:45 am]

BILLING CODE 4910–13–P

DEPARTMENT OF TRANSPORTATION

Federal Aviation Administration

Fifth Meeting: RTCA Special Committee 227, Standards of Navigation Performance

AGENCY: Federal Aviation Administration (FAA), U.S. Department of Transportation (DOT).

ACTION: Meeting Notice of RTCA Special Committee 227, Standards of Navigation Performance.

SUMMARY: The FAA is issuing this notice to advise the public of the fifth meeting of the RTCA Special Committee 227, Standards of Navigation Performance.

DATES: The meeting will be held February 11–15, 2013 from 9:00 a.m. to 5:00 p.m.

ADDRESSES: The meeting will be held at EUROCONTROL Headquarters, Rue de la Fusee 96, 1130 Brussels, Belgium. A WebEx/telephone bridge will be provided upon request.

FOR FURTHER INFORMATION CONTACT: The RTCA Secretariat, 1150 18th Street NW., Suite 910, Washington, DC 20036, or by telephone at (202) 833–9339, fax at (202) 833–9434, or Web site at *http://www.rtca.org.* Alternately, contact Jennifer Iversen directly at (202) 330–0662, email *jiversen@rtca.org,* or Dave Nakamura, (425) 965–6896, at email *dave.nakamura@boeing.com.*

SUPPLEMENTARY INFORMATION: Pursuant to section 10(a)(2) of the Federal Advisory Committee Act (Pub. L. No. 92–463, 5 U.S.C., App.), notice is hereby

given for a meeting of Special Committee 227. The agenda will include the following:

February 11–15, 2013

- Welcome, Introductions, and Administrative Remarks
- Agenda Overview
- Review Minutes and Action Items
- Update/Approve Minutes
- Review Planned Work Program for the Week
- Plenary Review—Resolution of committee review issues and finalization of draft MASPS for FRAC
- Technical Requirements Breakout Session (to occur daily as appropriate)
- Other Business
- Next Meeting Discussion
- Adjourn

Attendance is open to the interested public but limited to space availability. With the approval of the chairman, members of the public may present oral statements at the meeting. Persons wishing to present statements or obtain information should contact the person listed in the **FOR FURTHER INFORMATION CONTACT** section. Members of the public may present a written statement to the committee at any time.

Issued in Washington, DC, on January 25, 2013.

Cara Hunter,

NAS Business Management Branch, ANG–A14, Federal Aviation Administration.

[FR Doc. 2013–02159 Filed 1–31–13; 8:45 am]

BILLING CODE 4910–13–P

DEPARTMENT OF TRANSPORTATION

Federal Aviation Administration

[Summary Notice No. PE–2012–56]

Petition for Exemption; Summary of Petition Received

AGENCY: Federal Aviation Administration (FAA), DOT.

ACTION: Notice of petition for exemption received.

SUMMARY: This notice contains a summary of a petition seeking relief from specified requirements of 14 CFR. The purpose of this notice is to improve the public's awareness of, and participation in, this aspect of FAA's regulatory activities. Neither publication of this notice nor the inclusion or omission of information in the summary is intended to affect the legal status of the petition or its final disposition.

DATES: Comments on this petition must identify the petition docket number and must be received on or before February 21, 2013.

ADDRESSES: You may send comments identified by Docket Number FAA–2012–1256 using any of the following methods:

- *Government-wide rulemaking Web site:* Go to *http://www.regulations.gov* and follow the instructions for sending your comments electronically.
- *Mail:* Send comments to the Docket Management Facility; U.S. Department of Transportation, 1200 New Jersey Avenue SE., West Building Ground Floor, Room W12–140, Washington, DC 20590.
- *Fax:* Fax comments to the Docket Management Facility at 202–493–2251.
- *Hand Delivery:* Bring comments to the Docket Management Facility in Room W12–140 of the West Building Ground Floor at 1200 New Jersey Avenue SE., Washington, DC, between 9 a.m. and 5 p.m., Monday through Friday, except Federal holidays.

Privacy: We will post all comments we receive, without change, to *http://www.regulations.gov,* including any personal information you provide. Using the search function of our docket Web site, anyone can find and read the comments received into any of our dockets, including the name of the individual sending the comment (or signing the comment for an association, business, labor union, etc.). You may review DOT's complete Privacy Act Statement in the **Federal Register** published on April 11, 2000 (65 FR 19477–78).

Docket: To read background documents or comments received, go to *http://www.regulations.gov* at any time or to the Docket Management Facility in Room W12–140 of the West Building Ground Floor at 1200 New Jersey Avenue SE., Washington, DC, between 9 a.m. and 5 p.m., Monday through Friday, except Federal holidays.

FOR FURTHER INFORMATION CONTACT: Andrea Copeland, ARM–208, Office of Rulemaking, Federal Aviation Administration, 800 Independence Avenue SW., Washington, DC 20591; email *andrea.copeland@faa.gov;* (202) 267–8081.

This notice is published pursuant to 14 CFR 11.85.

Issued in Washington, DC, on January 24, 2013.

Lirio Liu,

Director, Office of Rulemaking.

Petition for Exemption

Docket No.: FAA–2012–1256

Petitioner: Aerolineas Ejecutives, S.A. de C.V. (ALE)

Section of 14 CFR Affected: 14 CFR 129.5(b)

Description of Relief Sought: Petitioner seeks an exemption to Part 129.5(b) to operate its Mexican-registered aircraft in the U. S. airspace as long as ALE's aircraft comply with the flight data recorder requirement of Part 135.

[FR Doc. 2013–02265 Filed 1–31–13; 8:45 am]

BILLING CODE 4910–13–P

DEPARTMENT OF TRANSPORTATION

Federal Highway Administration

Multistate Corridor Operations and Management Program

AGENCY: Federal Highway Administration (FHWA), DOT.

ACTION: Notice; Request for applications.

SUMMARY: This notice invites existing and potential multistate organizations, coalitions, or other arrangements or entities engaged in corridor transportation activities to apply for participation in the Multistate Corridor Operations and Management Program authorized by the Safe, Accountable, Flexible, Efficient Transportation Equity Act: A Legacy for Users (SAFETEA–LU). The purpose of this program is to promote regional cooperation, planning, and shared project implementation for programs and projects to improve multimodal transportation system management and operations. This notice seeks applications for available fiscal year (FY) 2012 funding ($7 million) for this program, which will be provided to cover a maximum of 80 percent of proposed program/project costs. Multiple awards are possible, but not guaranteed.

DATES: Formal applications must be submitted no later than April 2, 2013 to be assured consideration. Applications should be submitted through *http://www.grants.gov.*

FOR FURTHER INFORMATION CONTACT: For questions about the program discussed herein, contact Mr. Robert Arnold, Director, FHWA Office of Transportation Management, (202) 366–1285, or via email at *Robert.Arnold@dot.gov,* or Ms. Kate Hartman, Program Manager, RITA Truck and Program Assessment, (202) 366–2742, or via email at *Kate.Hartman@dot.gov.* For legal questions, please contact Adam Sleeter, Attorney Advisor, FHWA Office of the Chief Counsel, (202) 366–8839, or via email at *adam.sleeter@dot.gov.* Business hours for the FHWA are from 8:00 a.m. to 4:30 p.m., e.t., Monday through Friday, except Federal holidays.

SUPPLEMENTARY INFORMATION:

Electronic Access

An electronic copy of this document may be downloaded from the Federal Register's home page at: *http://www.archives.gov* and the Government Printing Office's database at *http://www.access.gpo.gov/nara.*

Background

Section 5211 of the Safe, Accountable, Flexible, Efficient Transportation Equity Act: A Legacy for Users (SAFETEA–LU) (Pub. L. 109–59; 119 Stat. 1144) created Section 511 of title 23, United States Code (23 U.S.C. 511) that authorizes the Secretary of Transportation to encourage and fund Multistate Corridor Operations and Management (MCOM) programs and projects. The purpose of these investments is to promote regional cooperation, planning, and shared project implementation for programs and projects to improve multimodal transportation system management and operations.

Since the MCOM program is funded by the DOT Intelligent Transportation Systems (ITS) Research program (Title V, Subtitle C of SAFETEA–LU), eligible activities include research, operational testing, evaluation, technology transfer, and limited pre-deployment support for innovative strategies and technologies intended to improve corridor safety and operational performance, enhance economic competitiveness, improve sustainability by reducing energy use and harmful greenhouse gas emissions, and enhance livability. Examples of the types of multimodal activities that could be supported through the MCOM program include improvements in corridor planning and analysis, performance monitoring and management, low emission zones, eco-lanes for alternative fuel vehicles, efficient and safe movement of freight, data sharing, traveler information, response to major traffic incidents/adverse weather/emergencies, and electronic fee and fare payments. The Department is also particularly interested in programs and projects that support, extend, or complement ongoing ITS program initiatives. More information about the ITS program is available at *http://www.its.dot.gov.*

How To Apply

Formal proposals should include the following:

1. Description of the corridor—geography, States involved, metropolitan areas encompassed, and other relevant information which the proposer deems important.

2. Transportation assets—describe the transportation assets, modes, and facilities within the corridor that the proposal will impact, including major highways (including truck routes), dedicated truck roadways, international border crossings (if applicable), rail lines, transit facilities, freight intermodal/transfer facilities, freight and passenger maritime facilities, waterways, airports, and existing ITS infrastructure.

3. Performance issues facing the corridor—types of transportation challenges facing the efficient and effective operation and management of transportation facilities and services in the corridor.

4. Membership of the existing or proposed organization, coalition, or other entity—current or proposed list of States and metropolitan areas to be involved including specific organizations such as transportation agencies, State safety enforcement agencies, metropolitan planning organizations, toll authorities, transit operators, port authorities, waterway and port operators, etc., and existing or proposed charter, governance, and/or procedural documentation. Proposers do not necessarily have to be an existing organization or coalition but should show evidence that a cooperative agreement, memorandum of understanding (MOU), or other organizational mechanism can be executed in a reasonable timeframe after selection.

5. Vision, goals, and objectives of the applicant for the corridor—The vision of the organization and goals, objectives, and activities to be pursued in addressing the identified issues and challenges facing the corridor.

6. Support for ITS program initiatives—ability to support or leverage ongoing DOT ITS initiatives. The DOT ITS initiatives are described on-line at *http://www.its.dot.gov.*

7. Funding request and breakdown—A complete list of activities to be funded by the request, including organizations and key staff involved, estimated costs, an identification of all funding sources that will supplement the requested funds and will be necessary to fully fund the request, and a timeline for completion of the activities to be supported. The maximum amount of funding requested from the MCOM program should not exceed $7 million nor should it exceed 80 percent of the total cost of the activities proposed to be funded by the MCOM program.

8. Party or parties to the award—A description of the entity that will be entering into the agreement with FHWA, and a description of how that entity will process or manage the program funds.

9. Proposals should not exceed 25 pages in length. Additional information supporting the application, such as maps, technical information, and letters of endorsement may be submitted as addenda to the application and will not count against the application page limit.

To ensure that all proposals receive fair and equal consideration for the limited available funds, the Department requires formal grant applications to be submitted to *http://www.grants.gov* by close of business [insert date 60 days after date of publication].

Evaluation Criteria

All proposals will be evaluated based on:

1. Overall effectiveness—how well the vision of the organization and the activities proposed address the transportation issues and challenges in the corridor, provide a multistate perspective, and align with DOT goals.

2. Multimodal focus—inclusion of various transportation modes in providing solutions to the corridor's performance issues.

3. Transferability—applicability of proposed practices, procedures, and use of technology to other transportation corridors.

4. Cost-effectiveness—benefits to be derived from activities proposed relative to estimated project costs; and ability and commitment to evaluate the effectiveness of activities proposed.

5. Organizational structure and commitments—depth, clarity, and potential effectiveness of the organization's structure; evidence of commitments by key partners to participate. Only State departments of transportation are eligible to apply. Non-State departments of transportation may partner with State entities to submit an application.

6. Support for ITS program initiatives—ability to support or leverage ongoing DOT ITS initiatives.

7. Funding leverage—beyond the required matching funds, the commitment and/or ability to use other funding sources to meet the challenges of the corridor.

8. Past Performance Related to ITS deployment—relevant examples of how the States potentially involved have deployed, operated, and maintained ITS solutions that continue to provide safety, efficiency, mobility, and other benefits to corridor stakeholders and the general public.

Post-Submission Process

Applicants may be contacted for additional information or clarification. The application should include a primary point of contact and provide

complete contact information for this individual.

The Department may pursue partial funding of applications.

If selected for funding, a formal agreement will be prepared between the Department and the membership of the multistate organization. The agreement will include a refined and more detailed scope of work.

Issued on: January 25, 2013.

Victor M. Mendez,

Federal Highway Administrator.

[FR Doc. 2013–02157 Filed 1–31–13; 8:45 am]

BILLING CODE 4910–22–P

DEPARTMENT OF TRANSPORTATION

Federal Motor Carrier Safety Administration

[Docket No. FMCSA–2012–0154]

Qualification of Drivers; Application for Exemptions; National Association of the Deaf

AGENCY: Federal Motor Carrier Safety Administration (FMCSA), DOT.

ACTION: Notice of final disposition.

SUMMARY: FMCSA announces its decision to grant requests from 40 individuals for exemptions from the Agency's physical qualifications standard concerning hearing for interstate drivers. The regulation and the associated advisory criteria published in the Code of Federal Regulations as the ''Instructions for Performing and Recording Physical Examinations'' have resulted in numerous drivers being prohibited from operating CMVs in interstate commerce based on the fact that they are unable to meet the hearing requirements. After notice and opportunity for public comment, the Agency concluded that granting exemptions for these CMV drivers will provide a level of safety that is equivalent to or greater than the level of safety maintained without the exemptions. FMCSA grants exemptions that will allow these 40 individuals to operate CMVs in interstate commerce for a 2-year period. The exemptions preempt State laws and regulations and may be renewed.

DATES: The exemptions are effective February 1, 2013. The exemptions expire on February 2, 2015.

FOR FURTHER INFORMATION CONTACT: Elaine M. Papp, Chief, Medical Programs Division, (202) 366–4001, *fmcsamedical@dot.gov,* FMCSA, Department of Transportation, 1200 New Jersey Avenue SE., Room W64–224, Washington, DC 20590–0001. Office hours are 8:30 a.m. to 5 p.m., e.t., Monday through Friday, except Federal holidays.

SUPPLEMENTARY INFORMATION:

A. Electronic Access

You may see all the comments online through the Federal Document Management System (FDMS) at: *http://www.regulations.gov.*

Docket: For access to the docket to read background documents or comments, go to *http://www.regulations.gov* and/or Room W12–140 on the ground level of the West Building, 1200 New Jersey Avenue SE., Washington, DC, between 9 a.m. and 5 p.m., e.t., Monday through Friday, except Federal holidays.

Privacy Act: Anyone may search the electronic form of all comments received into any of DOT's dockets by the name of the individual submitting the comment (or of the person signing the comment, if submitted on behalf of an association, business, labor union, or other entity). You may review DOT's complete Privacy Act Statement in the **Federal Register** (75 FR 82132, December 29, 2010).

B. Background

Under 49 U.S.C. 31136(e) and 31315, FMCSA may grant an exemption from the safety regulations for a 2-year period if it finds ''such exemption would likely achieve a level of safety that is equivalent to, or greater than, the level that would be achieved absent such exemption.'' The statute also allows the Agency to renew exemptions at the end of the 2-year period. On May 25, 2012, FMCSA published a notice requesting public comment on NAD's application for an exemption on behalf of 45 drivers. The current provisions of the FMCSRs concerning hearing state that a person is physically qualified to drive a CMV if that person:

> First perceives a forced whispered voice in the better ear at not less than 5 feet with or without the use of a hearing aid or, if tested by use of an audiometric device, does not have an average hearing loss in the better ear greater than 40 decibels at 500 Hz, 1,000 Hz, and 2,000 Hz with or without a hearing aid when the audiometric device is calibrated to American National Standard (formerly ASA Standard) Z24.5—1951.

49 CFR 391.41(b)(11). This standard was adopted in 1970, with a revision in 1971 to allow drivers to be qualified under this standard while wearing a hearing aid, 35 FR 6458, 6463 (April 22, 1970) and 36 FR 12857 (July 3, 1971).

In support of its application for exemptions, the National Association of the Deaf (NAD), cited and relied on a study requested by the Agency's Medical Review Board and presented to the Agency in 2008. The Evidence Report was prepared for the purpose of providing information regarding the current state of knowledge on hearing and CMV driver safety.[1] The NAD maintains that communication in trucking is no longer hampered by hearing loss because drivers increasingly rely on smartphones and other technology to communicate with dispatch. The NAD conducted over 100 hours of interviews with individuals who are deaf and hard of hearing and reports that deaf drivers face fewer distractions behind the wheel.

FMCSA grants 40 individuals an exemption from the regulatory requirement in § 391.41(b)(11) allowing individuals who do not meet the hearing requirements to operate CMVs in interstate commerce for a 2-year period. The Agency's decision on these exemption applications is based on the current medical literature and information and the ''Executive Summary on Hearing, Vestibular Function and Commercial Motor Driving Safety,'' (the 2008 Evidence Report) presented to FMCSA on August 26, 2008. The evidence report reached two conclusions regarding the matter of hearing loss and CMV driver safety: (1) No studies that examined the relationship between hearing loss and crash risk exclusively among CMV drivers were identified; and (2) evidence from studies of the private driver license holder population does not support the contention that individuals with hearing impairment are at an increased risk for a crash. In addition, the Agency reviewed the applicant's driving record found in the CDLIS,[2] for CDL holders, and interstate and intrastate inspections recorded in MCMIS.[3] The Agency

[1] Price, N., Tiller, M., Reston, J., & Tregear, S., ''Executive Summary on Hearing, Vestibular Function and Commercial Motor Driving Safety,'' presented to FMCSA on August 26, 2008. Retrieved April 27, 2012, from: *http://www.fmcsa.dot.gov/rules-regulations/TOPICS/mep/report/Hearing-Evidence-Report-Final-Executive-Summary-prot.pdf.* See the docket for this notice. The full text of the Evidence Report is available through a link at *http://ntl.bts.gov/lib/30000/30400/30459/Hearing_DOT-FMCSA_-_FINAL_8-29-08.pdf.* The evidence report also reviewed vestibular disorders, which are not included in these exemption applications.

[2] *Commercial Driver License Information System* (CDLIS) is an information system that allows the exchange of commercial driver licensing information among all the States. CDLIS includes the databases of 51 licensing jurisdictions and the CDLIS Central Site, all connected by a telecommunications network.

[3] *Motor Carrier Management Information System* (MCMIS) is an information system that captures data from field offices through SAFETYNET, CAPRI, and other sources. It is a source for FMCSA

Continued

acknowledges there could be potential consequences of a driver being hearing impaired and/or deaf while operating a CMV under some scenarios. However, the Agency believes the drivers covered by the exemptions do not pose a risk to public safety.

C. Exemptions

Following individualized assessments of the exemption applications, including a review of detailed follow-up information requested from each applicant, FMCSA grants exemptions from 49 CFR 391.41(b)(11) to 40 individuals. Under current FMCSA regulations, all of the 40 drivers receiving exemptions from 49 CFR 391.41(b)(11) would have been considered physically qualified to drive a CMV in interstate commerce except that they do not meet the hearing requirement.

In addition to evaluating the medical status of each applicant, FMCSA evaluated the crash and violation data for the 40 drivers, some of whom currently drive a CMV in intrastate commerce. The CDLIS and MCMIS were searched for crash and violation data on the 40 applicants. Each applicant's record demonstrated a safe driving history.

FMCSA published a notice announcing the exemption applications and requested public comment for each of the applicants. A short summary of the applicants' qualifications follows. A discussion of the comments received follows in section D of this notice. For those applicants who were discussed in the previous notice but are not mentioned in this notice, the Agency will complete the evaluation of those applications and announce its decision at a later date.

Docket # FMCSA–2012–0154

On May 25, 2012, FMCSA published a notice of receipt of exemption applications and requested public comment on 40 individuals (71 FR 60606; Docket number FMCSA–2012–0154). The comment period ended on July 30, 2012. Five hundred and seventy commenters responded to the **Federal Register** notice. A discussion of the comments is presented later in this document. FMCSA has determined that the following applicants should be granted an exemption.

David W. Bateman

Mr. Bateman holds a class A commercial driver's license (CDL) from the state of Minnesota. He has driven intrastate for the past 14 years, including driving dump trucks and tractor trailer trucks. He would like to drive tractor trailer trucks in interstate commerce, if he is granted an exemption.

William B. Britt, Jr.

Mr. Britt holds a class D driver's license from the state of Tennessee. Class D has a for-hire endorsement that allows a person to drive vehicles such as limousines and taxis. He operates his personal vehicle in his job as a repairman. He would like to obtain a CDL and drive passenger buses, if granted an exemption.

Ernest W. Brown

Mr. Brown holds a class D driver's license from the state of Kentucky. He would like to obtain a CDL and drive CMVs greater than 26,001 pounds in interstate commerce, if granted an exemption.

Cody J. Campbell

Mr. Campbell holds a class D driver's license from Louisiana. He currently is a ''light duty driver,'' driving a tractor. He would like to obtain a CDL and drive heavy equipment such as a dump truck, or rig truck with a trailer, if granted an exemption.

Tyjuan M. Davis

Mr. Davis holds a class D driver's license from the state of Florida. His family is in the trucking business and he would like to obtain a class A CDL and drive tractor trailers in interstate commerce, if granted an exemption.

Randall R. Doane

Mr. Doane holds a class AM CDL from the state of Texas. He has logged over 250,000 miles driving trucks in interstate commerce prior to failing his hearing test recently. He has experience driving double/triple trailers, tankers and hazardous material transport. He is currently permitted to drive a CMV in intrastate commerce. He would like to return to driving CMVs in interstate commerce, if granted an exemption.

Allen W. Estes

Mr. Estes holds a class B CDL from the state of Louisiana. He has driven a bus transporting students to and from school since 1990. He would like to obtain a CDL so that he can transport students to events outside of Louisiana, if granted an exemption.

Leslie A. Fairbanks

Mr. Fairbanks held a class A CDL driver's license from the state of Minnesota from 2001 until 2010, when he failed his hearing test. During that time he drove a variety of tractor trailer trucks in interstate commerce. He would like to obtain a CDL and return to driving tractor trailer trucks, if he is granted an exemption.

Edward T. Geariety

Mr. Geariety held a class A CDL from the state of Minnesota from 1996 until 2011, when he failed his hearing test. During that time he drove large trucks carrying stone from a quarry to customers. He would like to return to driving CMVs in interstate commerce, if granted an exemption.

Donald W. Gordon

Mr. Gordon holds a class CM driver's license from the state of Pennsylvania. He operates a mini-van as an independent contractor picking up and delivering materials. He would like to obtain a CDL and drive CMVs for a national carrier, if granted an exemption.

William Edward Haab

Mr. Haab holds a class D driver's license from the state of Louisiana. He is interested in obtaining a CDL and pursuing a career in commercial trucking, if granted an exemption.

Charles L. Harper

Mr. Harper holds a driver's license from the state of Washington. He has driven rental vehicles and a 12-seat van for a group home. He would like to obtain a CDL and have the opportunity to drive CMVs in interstate commerce, if granted an exemption.

Cornelio Hernandez

Mr. Hernandez holds a driver's license from the state of California. He has enrolled in a driving course for a class B CDL, but was unable to complete it as he did not pass the hearing test. He would like to obtain a class A or B CDL to pursue work driving CMVs in interstate commerce driver, if granted an exemption.

Alvin L. Johnson

Mr. Johnson holds a class CM driver's license from the state of Georgia. He would like to attend driving school to obtain a CDL and drive CMVs in interstate commerce, if granted an exemption.

Jerry D. Jones

Mr. Jones holds a class C CDL from the state of Texas. He has 7 years' experience driving a variety of forklifts for a construction company. He would like to pursue opportunities driving CMVs in interstate commerce, if granted an exemption.

inspection, crash, compliance review, safety audit, and registration data.

James E. Karr

Mr. Karr holds a class DM driver's license from the state of Kentucky. He would like to obtain a CDL and seek employment opportunities driving CMVs in interstate commerce, if granted an exemption.

Lorin W. King

Mr. King holds a class D driver's license from the state of Oklahoma. The class D license permits one to drive regular automobiles and trucks. He has experience driving single trailer vehicles with airbrakes. He would like to obtain a CDL and seek employment opportunities driving CMVs in interstate commerce, if granted an exemption.

Christopher Kuller

Mr. Kuller holds a class M driver's license from the state of Indiana. In the past, he held a CDL and hazmat license, and drove in interstate commerce for 14 years, until he was unable to pass the DOT hearing test. He would like to obtain a CDL and return to driving CMVs in interstate commerce, if granted an exemption.

Julio Cesar Medrano

Mr. Medrano holds a driver's license from the state of Washington. He is currently a student majoring in diesel technology, graduating in May 2012. Most job descriptions for diesel engine technicians include a requirement that he holds a CDL, due to the need to pick up and drive trucks back to the shop for repair. He would like to obtain a CDL and drive CMVs in interstate commerce, if granted an exemption.

Hal A. Miller

Mr. Miller holds a class C driver's license from the state of Iowa. A class C allows the operation of vehicles under 26,000 pounds. He has experience operating a Ryder rental truck and personal farm tractors. He would like to obtain a CDL and drive CMVs in interstate commerce, if granted an exemption.

Kathy K. Miller

Ms. Miller holds a class C driver's license from the state of Iowa. She has experience driving students to and from local activities. She is limited at work due to her not being able to pass the hearing test and obtain a DOT medical card. She would like to obtain a CDL and drive CMVs in interstate commerce, if granted an exemption. She is interested in career opportunities with package delivery companies.

Brian J. Minch

Mr. Minch holds a driver's license from the state of New Hampshire. He currently drives super duty pick-up trucks for landscape and construction companies. He would like to obtain a CDL and drive CMVs in interstate commerce, if granted an exemption.

Larry J. Moss

Mr. Moss holds a driver's license from the state of California. He currently works for a delivery and hauling service, driving trucks and often pulling a trailer. He would like to attend trucking school, obtain a CDL and drive CMVs in interstate commerce, if granted an exemption.

Leslie R. O'Rorke

Mr. O'Rorke holds a class D driver's license from the state of Illinois. He has experience driving super duty pick-up trucks with a trailer and dump trucks for a tree service company. He would like to obtain a CDL and drive CMVs in interstate commerce, if granted an exemption.

Timothy A. Parker

Mr. Parker holds a class C driver's license from the state of California. The class C license in California allows one to operate a traditional two-axle vehicle. He has experience operating 18-wheel trucks as well as forklifts. He would like to obtain a CDL so he can drive the tractor trailer trucks in interstate commerce, if granted an exemption.

Gregory M. Potter

Mr. Potter holds a class C driver's license from the state of Texas. He has experience driving a company van and rental trucks towing a trailer. He would like to obtain a class A CDL to drive tanker trucks in interstate commerce, if granted an exemption.

Gerson P. Rameriez

Mr. Rameriez holds a class D driver's license from the state of Montana. He has experience driving a dump truck towing a trailer. He also drove a truck for five years while working as a painter. He would like to obtain a class A CDL and attend a trucking school in Montana, if granted an exemption.

Jeremy Reams

Mr. Reams holds a class D driver's license from the state of Kentucky. The class D is valid for any single motor vehicle, and a trailer with weights not greater than 26,000 pounds. He has experience driving 24-foot moving trucks, fifth wheel vehicles and has hauled ATV's for personal use. He would like to obtain a CDL to drive CMVs in interstate commerce, if granted an exemption.

Robert R. Rotondi

Mr. Rotondi holds a driver's license from the state of South Carolina. He has experience driving rental trucks and forklifts. He currently owns a 12-foot trailer he uses to tow his motorcycle. He would like to obtain a class A or B CDL and drive CMVs in interstate commerce, if granted an exemption.

Daniel Schoultz

Mr. Schoultz holds a class C driver's license from the state of Pennsylvania. He has 25 years' experience driving trucks, but he is currently not able to pass the DOT hearing test. He would like to obtain a CDL again and drive CMVs in interstate commerce, if granted an exemption.

Stanley W. Shields

Mr. Shields holds a class D driver's license from the state of Kentucky. He would like to obtain a CDL and to seek employment opportunities as a CMV driver, if granted an exemption.

James M. Skinner

Mr. Skinner holds a driver's license from the state of Florida that allows him to drive any non-commercial vehicle less than 26,001 pounds. He has experience driving rental trucks and towing rental trailers. He would like to obtain a class A CDL and drive an interstate tractor trailer weighing over 26,001 pounds with airbrakes, if granted an exemption.

Ronald J. Taylor

Mr. Taylor holds a class C driver's license from the state of Texas. He is currently a student, but would like to seek opportunities in driving. He would like to obtain a CDL to drive CMVs in interstate commerce, if granted an exemption.

Justin J. Trethewey

Mr. Trethewey holds a class C chauffeur license from the state of Michigan. He is starting his own transit business after working as a chauffeur. He would like to obtain a CDL and tow a gooseneck trailer to transport cars, recreational vehicles or small trailers, if granted an exemption.

Gilbert J. Valdez

Mr. Valdez holds a driver's license from the state of Rhode Island. He currently works part-time and would like to obtain a CDL to seek employment opportunities driving CMVs in interstate commerce, if granted an exemption.

Mark L. Valimont

Mr. Valimont holds a class C driver's license from the state of Texas. He is currently a package handler. He has 13 years' experience driving dump trucks and three years' experience driving a tractor. He would like to obtain a CDL and drive CMVs in interstate commerce, if granted an exemption.

Kevin C. Willis

Mr. Willis holds a class C driver's license from the state of California. He has held a FAA Private Pilot Certificate since 2006 and flies private planes that weigh up to 12,500 pounds. He would like to obtain a CDL and pursue employment opportunities in the commercial transportation business, if granted an exemption.

James R. Wilson

Mr. Wilson holds a class C driver's license from the state of Georgia. He has experience driving forklifts and a super duty pickup truck for a private employer. He would like to obtain a CDL and drive CMV's in interstate commerce, if granted an exemption.

Holly Cameron Wright, Jr.

Mr. Wright holds a class C driver's license from the state of North Carolina. He has experience driving forklifts and commercial vehicles at his family-owned business site. He would like to obtain a CDL and drive CMVs in interstate commerce, if granted an exemption.

D. Comments

In response to the notice, FMCSA received 570 comments.

Granting the Exemptions on a Trial Basis

The American Trucking Associations (ATA) acknowledged the growing need in the industry for drivers and the difficulty in finding qualified drivers. Given this information, ''ATA believes that it is in the best interest of the FMCSA, the trucking industry, society and highway safety to grant the requested exemptions, with the following stipulations:

(a) Granting exemptions to these 40 drivers would be viewed as a temporary, single instance measure, until the proposed study was completed;

(b) In granting the exemptions, FMCSA should compel the applicants to participate in a study about safety performance, and

(c) If the study indicates that the drivers perform safely, that FMCSA should initiate rulemaking to change the current standard.

FMCSA Response: FMCSA notes that the ATA is interested in having more qualified drivers who would otherwise not be qualified due to their hearing impairment. However, FMCSA does not plan to implement the ATA proposal. FMCSA does not believe it would be beneficial to future applicants to restrict exemptions to a two-year, non-renewable process as part of a proposed new program. The FMCSA's 2008 Evidence Report found no increase in crash risk among hearing impaired drivers, and the Agency believes that additional studies could simply delay drivers receiving a CDL and prove costly to the government without providing meaningful additional safety to the driving public.

No Ad hoc Exemptions

The Advocates for Highway and Auto Safety (Advocates) stated that they ''suggest it is time for FMCSA to engage the process to revise the standards rather than short-circuit those procedures in order to grant ad hoc exemptions.'' They further state their concern that the only scientific evidence presented was in connection with the FMCSA Hearing Evidence Report. They state that the 2008 Evidence Report is not a research study, but rather a review and evaluation of several prior studies related to hearing and drivers.

FMCSA Response: The Agency does not believe a new scientific study is necessary to make a determination concerning the exemption applications. The 2008 Evidence Report found that previous studies by various researchers did not provide evidence to support the contention that individuals with hearing deficits are at an increased risk for a motor vehicle crash. And there is no basis for concluding that a new study would yield different results. Also, a number of States allow hearing impaired CMV drivers. In fact, several of the drivers discussed in this notice already have experience as CMV drivers. Based on the available literature, and the safe driving experience of these individuals, the Agency believes granting the exemption is appropriate. FMCSA evaluates each driver on a case-by-case basis and also investigates the past driving/violation record to ensure an acceptable level of safety.

While the Agency appreciates Advocates' suggestion that the Agency should revise the standards rather than grant ad hoc exemptions, the rulemaking process is too lengthy to afford relief to the individuals affected here. With no specific data to show that hearing impaired or deaf drivers are a danger to the driving public, granting these exemptions will provide an opportunity to drivers to enter the trucking industry or further pursue driving careers.

FMCSA has received a petition for rulemaking from NAD formally requesting that the Agency eliminate the hearing standard under 49 CFR Part 391. A copy of the petition, submitted in accordance with 49 CFR part 389 (Rulemaking Procedures—Federal Motor Carrier Safety Regulations) has been placed in the docket referenced at the beginning of this notice. The Agency will consider NAD's petition in accordance with the rules under 49 CFR part 389 and issue a decision on the matter at a later date. If the Agency grants the petition, it would initiate a rulemaking seeking public comment on proposed changes to the regulations.

Concerns About Exemptions for Bus Drivers With Passengers

The American Bus Association (ABA) submitted comments stating their concerns regarding allowing hearing impaired or deaf drivers to drive buses with passengers. They stated ''The ABA's opposition to the NAD's application is bottomed on the tasks a CMV motorcoach driver must fulfill while responsible for up to fifty-five passengers in a motorcoach.'' They further state:

> ''While it may be true, as NAD contends, that technology may keep hearing impaired drivers from being 'hampered' by the loss of hearing, that rationale cannot apply when a CMV driver is transporting passengers. For CMV motorcoach drivers piloting the vehicle is only a part of the driver's duties. Drivers with a 'P' endorsement may be required to interact with passengers in any number of ways that requires the driver to successfully pass the hearing requirement in 49 CFR 391.''

They oppose the application for exemption to the extent that the exemption would allow any of the 40 applicants to obtain a CDL with a passenger endorsement or in any way qualify them to operate a motorcoach in interstate commerce.

FMCSA Response: The Agency acknowledges ABA's concerns about the need for motorcoach drivers to communicate with the passengers in the event of an emergency. Motorcoach drivers are responsible for the safety of passengers and that the driver must be able to hear any sign of passenger distress. Therefore, the terms and conditions for the exemptions would not allow the hearing impaired drivers to operate a motorcoach with passengers in interstate commerce.

Not Safe for the Driving Public To Grant These Exemptions

The Agency received an additional nine comments from private citizens and advocacy groups expressing their concern and asking FMCSA not to grant these exemptions. All of the these comments simply expressed that in their opinion they felt it was a safety issue, and they asked FMCSA not to grant any of the 40 exemptions.

FMCSA Response: The Agency acknowledges these comments and their concerns. However, as previously stated there is no specific scientific data to show that hearing impaired drivers are a higher safety risk than other drivers. Also, several States already allow hearing impaired individuals to operate commercial vehicles in intrastate commerce and most, if not all States allow such individuals to operate passenger cars.

Support for Applicants and the Exemptions

The FMCSA received 505 comments from individuals in support of the exemption applications. Most of them stated that the applicants should ''be granted unrestricted exemptions from the hearing requirements'' and cited evidence from the FMCSA's 2008 Executive Study of the hearing requirement and that it shows there is not an increase in crash risk for hearing impaired drivers. The letter also states that they strongly feel these deaf drivers should be able to drive any type of vehicle.

Some of the commenters stated that they would like FMCSA to allow all drivers with hearing impairment to be able to obtain a CDL. They state that with modern technology, such drivers can communicate without difficulty.

A number of the comments stated that they believed FMCSA was discriminating against deaf drivers by prohibiting them from working in the trucking industry. Others stated that they thought that hearing impaired drivers were safer drivers and not going to be distracted by conversations, cell phones and radio noise. Others stated that with modern technology, there was not a hearing requirement in their opinion. Additionally, there were comments that other countries allow hearing impaired drivers to operate CMVs and that some States offer a waiver to hearing impaired drivers for intrastate driving.

The FMCSA also received an additional 43 comments in support of these exemptions from advocacy groups. These included comments from: the Nebraska Commission for the Deaf and Hard of Hearing; Regional Center for Independent Living; First People of GA; and the Commonwealth of Massachusetts, Department of Mental Health. All stated their belief that granting these exemptions is the right thing to do at this time.

In addition, the Agency received a comment of support from the National Association of the Deaf, the organization that submitted the application on behalf of the drivers. NAD stated that it ''unequivocally supports the granting of a full exemption to each of the 45 drivers.'' They have a concern regarding the validity of the ''forced whisper test'' to assess hearing and cite FMCSA's 2008 Evidence Report. They state that the report raised questions about the validity of the same test. They also called for the removal of the hearing requirement altogether from FMCSA's physical qualification standards.

The U.S. Equal Employment Opportunity Commission (EEOC) believes granting the exemptions would be consistent with the Americans with Disabilities Act (ADA). EEOC ''urges FMCSA to give due consideration to the results of the 2008 hearing loss study as it represents current and objective evidence that will help the agency determine whether a driver who cannot meet the hearing standard should be permitted to operate a CMV in interstate commerce.'' They further urged the Agency to adopt a flexible and comprehensive approach to be able to obtain a CDL.

Deaf Truckers United stated that drivers who are hearing impaired rely on their other heightened senses such as vision and touch. They state that these drivers are more keenly aware of these senses and that they are able to pick up things that hearing drivers miss. They also ask that the hearing requirement be removed from 49 CFR Part 391.

FMCSA Response: FMCSA acknowledges support for these exemptions. The Agency carefully reviewed all the comments about every individual. As stated above, the rulemaking process is too lengthy to afford relief to the individuals affected here. FMCSA has received a petition for rulemaking from NAD formally requesting that the Agency eliminate the hearing standard under 49 CFR Part 391. The Agency will consider the petition in accordance with the rules under 49 CFR Part 389, and issue a decision on the matter at a later date. If the Agency grants the petition, it would initiate a rulemaking seeking public comment on proposed changes to the regulations.

E. Basis for Exemption

Under 49 U.S.C. 31136(e) and 31315, FMCSA may grant an exemption from the hearing standard in 49 CFR 391.41(b)(11) if the exemption is likely to achieve an equivalent or greater level of safety than would be achieved without the exemption. With the exemption, applicants can drive in interstate commerce. Thus, the Agency's analysis focuses on whether an equal or greater level of safety is likely to be achieved by permitting each of these drivers to drive in interstate commerce as opposed to restricting him or her to driving in intrastate commerce. The driver must comply with the terms and conditions of the exemption. This includes reporting any crashes or accidents as defined in 49 CFR 390.5 and reporting all citations and convictions for disqualifying offenses under 49 CFR part 383 and 49 CFR part 391.

Conclusion

The Agency is granting exemptions from the hearing standard, 49 CFR 391.41(b)(11), to 40 individuals based on a thorough evaluation of each driver's qualifications, safety experience, and medical condition. Safety analysis of information relating to these 40 applicants meets the burden of showing that granting the exemptions would achieve a level of safety that is equivalent to or greater than the level that would be achieved without the exemption. By granting the exemptions, the CMV industry will gain 40 additional CMV drivers. In accordance with 49 U.S.C. 31315, each exemption will be valid for 2 years from the effective date, with annual recertification required unless revoked earlier by FMCSA. The exemption will be revoked if the following occurs: (1) The person fails to comply with the terms and conditions of the exemption; (2) the exemption has resulted in a lower level of safety than was maintained prior to being granted; or (3) continuation of the exemption would not be consistent with the goals and objectives of 49 U.S.C. 31136 and 31315.

FMCSA exempts the following 40 drivers for a period of 2 years with annual medical certification required: David W. Bateman (MN); William B. Britt (TN); David W. Brown (ME); Ernest W. Brown (KY); Cody J. Campbell (IA); Tyjuan M. Davis (FL); Randall R. Doane (TX); Allan W. Estes (LA); Leslie A. Fairbanks (MN); Edward T. Geariety (NY); Donald W. Gordon (PA); William Edward Haab (LA); Charles L. Harper (WA); Cornelio E. Hernandez (CA); Alvin Leo Johnson (GA); Jerry D. Jones

(TX); James Karr (KY); Christopher Kuller (PA); Lorin W. King (OK); Julio Cesar Medrano (WA); Hal A. Miller (IA); Kathy K. Miller (IA); Brian I. Minch (NH); Larry J. Moss (CA);Lesley R. O'Rorke (IL); Timothy A. Parker (CA); Gregory M. Potter (TX); Gerson P. Ramirez (MT); Jeremy Reams (KY); Robert R. Rotondi (SC); Daniel Schoultz (PA); Stanley W. Shields (KY); James M. Skinner (FL); Ronald J. Taylor (TX); Justin J. Trehtewey (MI); Gilbert Valdez (RI); Mark L. Valimont (TX); Kevin C. Wllis (CA); James R. Wilson (GA); Holly Cameron Wright Jr. (NC) from the prohibition of CMV operations by persons with who do not meet the hearing requirement. If the exemption is still in effect at the end of the 2-year period, the person may apply to FMCSA for a renewal under procedures in effect at that time.

Issued on: January 29, 2013.

Anne S. Ferro,

Administrator.

[FR Doc. 2013–02266 Filed 1–30–13; 4:15 pm]

BILLING CODE 4910–EX–P

DEPARTMENT OF TRANSPORTATION

National Highway Traffic Safety Administration

[NHTSA–2012–0135]

Insurer Reporting Requirements; Reports Under 49 U.S.C. on Section 33112(c)

AGENCY: National Highway Traffic Safety Administration (NHTSA), Department of Transportation.

ACTION: Notice of availability.

SUMMARY: This notice announces publication by NHTSA of the annual insurer report on motor vehicle theft for the 2007 reporting year. Section 33112(h) of Title 49 of the U.S. Code, requires this information to be compiled periodically and published by the agency in a form that will be helpful to the public, the law enforcement community, and Congress. As required by section 33112(c), this report provides information on theft and recovery of vehicles; rating rules and plans used by motor vehicle insurers to reduce premiums due to a reduction in motor vehicle thefts; and actions taken by insurers to assist in deterring thefts.

ADDRESSES: Interested persons may obtain a copy of this report or read background documents by going to *http://regulations.dot.gov* at any time or to Room W12–140 on the ground level of the West Building, 1200 New Jersey Avenue SE., Washington, DC 20590, between 9 a.m. and 5 p.m., Monday through Friday, except Federal Holidays. Requests should refer to Docket No. 2012–0135.

FOR FURTHER INFORMATION CONTACT: Ms. Carlita Ballard, Office of International Policy, Fuel Economy and Consumer Programs, NHTSA, 1200 New Jersey Ave. SE., Washington, DC 20590. Ms. Ballard's telephone number is (202) 366–5222. Her fax number is (202) 493–2990.

SUPPLEMENTARY INFORMATION: The Motor Vehicle Theft Law Enforcement Act of 1984 (Theft Act) was implemented to enhance detection and prosecution of motor vehicle theft (Pub. L. 98–547). The Theft Act added a new Title VI to the Motor Vehicle Information and Cost Savings Act, which required the Secretary of Transportation to issue a theft prevention standard for identifying major parts of certain high-theft lines of passenger cars. The Act also addressed several other actions to reduce motor vehicle theft, such as increased criminal penalties for those who traffic in stolen vehicles and parts, curtailment of the exportation of stolen motor vehicles and off-highway mobile equipment, establishment of penalties for dismantling vehicles for the purpose of trafficking in stolen parts, and development of ways to encourage decreases in premiums charged to consumers for motor vehicle theft insurance.

This notice announces publication by NHTSA of the annual insurer report on motor vehicle theft for the 2007 reporting year. Section 33112(h) of Title 49 of the U.S. Code, requires this information to be compiled periodically and published by the agency in a form that will be helpful to the public, the law enforcement community, and Congress. As required by section 33112(h), this report focuses on the assessment of information on theft and recovery of motor vehicles, comprehensive insurance coverage and actions taken by insurers to reduce thefts for the 2007 reporting period.

Section 33112 of Title 49 requires subject insurers or designated agents to report annually to the agency on theft and recovery of vehicles, on rating rules and plans used by insurers to reduce premiums due to a reduction in motor vehicle thefts, and on actions taken by insurers to assist in deterring thefts. Rental and leasing companies also are required to provide annual theft reports to the agency. In accordance with 49 CFR 544.5, each insurer, rental and leasing company to which this regulation applies must submit a report annually not later than October 25, beginning with the calendar year for which they are required to report. The report would contain information for the calendar year three years previous to the year in which the report is filed. The report that was due by October 25, 2010 contains the required information for the 2007 calendar year. Interested persons may obtain a copy of individual insurer reports for CY 2007 by contacting the U.S. Department of Transportation, Docket Management, 1200 New Jersey Avenue SE., West Building, Room W12–140 ground level, Washington, DC 20590–001. Requests should refer to Docket No. 2012–0135.

The annual insurer reports provided under section 33112 are intended to aid in implementing the Theft Act and fulfilling the Department's requirements to report to the public the results of the insurer reports. The first annual insurer report, referred to as the Section 612 Report on Motor Vehicle Theft, was prepared by the agency and issued in December 1987. The report included theft and recovery data by vehicle type, make, line, and model which were tabulated by insurance companies and, rental and leasing companies. Comprehensive premium information for each of the reporting insurance companies was also included. This report, the twentieth, discloses the same subject information and follows the same reporting format.

Issued on: January 28, 2013.

Christopher J. Bonanti,

Associate Administrator for Rulemaking.

[FR Doc. 2013–02208 Filed 1–31–13; 8:45 am]

BILLING CODE 4910–59–P

DEPARTMENT OF TRANSPORTATION

Surface Transportation Board

[Docket No. FD 35712]

BNSF Railway Company—Trackage Rights Exemption—Pemiscot County Port Authority

Pemiscot County Port Authority (PCPA) has agreed to grant local trackage rights to BNSF Railway Company (BNSF) over the rail line located between PCPA's connection with BNSF near BNSF milepost 212.22 at Hayti, Mo., and the Pemiscot Port Harbor, on the Mississippi River near Hayti, a distance of 4.9 miles.[1]

The transaction is scheduled to be consummated after February 16, 2013,

[1] BNSF states that it is currently negotiating a trackage rights agreement with PCPA, and that a copy of the agreement will be filed with the Board within 10 days of its execution.

the effective date of the exemption (30 days after the exemption was filed).

The purpose of the transaction is to permit BNSF to provide common carrier service to all existing and future customers located on the 4.9-mile line of railroad.[2]

As a condition to this exemption, any employees affected by the trackage rights will be protected by the conditions imposed in *Norfolk & Western Railway—Trackage Rights—Burlington Northern, Inc.,* 354 I.C.C. 605 (1978), as modified in *Mendocino Coast Railway—Lease & Operate—California Western Railroad,* 360 I.C.C. 653 (1980).

This notice is filed under 49 CFR 1180.2(d)(7). If the notice contains false or misleading information, the exemption is void *ab initio.* Petitions to revoke the exemption under 49 U.S.C. 10502(d) may be filed at any time. The filing of a petition to revoke will not automatically stay the effectiveness of the exemption. Petitions for stay must be filed by February 8, 2013 (at least 7 days before the exemption becomes effective).

An original and 10 copies of all pleadings, referring to Docket No. FD 35712, must be filed with the Surface Transportation Board, 395 E Street SW., Washington, DC 20423–0001. In addition, a copy of each pleading must be served on Karl Morell, Of Counsel, Ball Janik LLP, Suite 225, 655 Fifteenth Street NW., Washington, DC 20005.

Board decisions and notices are available on our Web site at ''*www.stb.dot.gov.*''

Decided: January 28, 2013.

By the Board, Richard Armstrong, Acting Director, Office of Proceedings.

Jeffrey Herzig,

Clearance Clerk.

[FR Doc. 2013–02160 Filed 1–31–13; 8:45 am]

BILLING CODE 4915–01–P

[2] BNSF believes that a 2003 industry track agreement between BNSF and PCPA authorized BNSF to provide common and contract carrier operations over the 4.9-mile line that did not require prior Board approval. In *Rail Switching Services, Inc.—Operation Exemption—Pemiscot County Port Authority,* FD 35685 *et al.* (STB served Jan. 8, 2013), the Board advised BNSF to seek promptly any needed Board authority for its operations over the line to be in compliance with the Board's statute. BNSF states that, out of an abundance of caution and in light of the concerns expressed by the Board, it is filing this notice to acquire the trackage rights.

DEPARTMENT OF THE TREASURY

Office of Foreign Assets Control

Designation of Seven Individuals and One Entity Pursuant to Executive Order 13581, ''Blocking Property of Transnational Criminal Organizations''

AGENCY: Office of Foreign Assets Control, Treasury.

ACTION: Notice.

SUMMARY: The Treasury Department's Office of Foreign Assets Control (''OFAC'') is publishing the names of one entity and seven individuals whose property and interests in property are blocked pursuant to Executive Order 13581 of July 24, 2011, ''Blocking Property of Transnational Criminal Organizations.''

DATES: The designations by the Director of OFAC, pursuant to Executive Order 13581, of the one entity and eight individuals identified in this notice were effective on January 23, 2013.

FOR FURTHER INFORMATION CONTACT: Assistant Director, Sanctions Compliance and Evaluation, Office of Foreign Assets Control, Department of the Treasury, Washington, DC 20220, tel.: 202/622–2490.

SUPPLEMENTARY INFORMATION:

Electronic and Facsimile Availability

This document and additional information concerning OFAC are available from OFAC's Web site (*www.treas.gov/ofac*). Certain general information pertaining to OFAC's sanctions programs is available via facsimile through a 24-hour fax-on-demand service, tel.: 202/622–0077.

Background

On July 24, 2011, the President issued Executive Order 13581, ''Blocking Property of Transnational Criminal Organizations'' (the ''Order''), pursuant to, *inter alia,* the International Emergency Economic Powers Act (50 U.S.C. 1701–06). The Order was effective at 12:01 a.m. eastern daylight time on July 25, 2011. In the Order, the President declared a national emergency to deal with the threat that significant transnational criminal organizations pose to the national security, foreign policy, and economy of the United States.

Section 1 of the Order blocks, with certain exceptions, all property and interests in property that are in the United States, that come within the United States, or that are or come within the possession or control of any United States person, of persons listed in the Annex to the Order and of persons determined by the Secretary of the Treasury, in consultation with the Attorney General and the Secretary of State, to satisfy certain criteria set forth in the Order.

On January 23, 2013, the Director of OFAC, in consultation with the Attorney General and the Secretary of State, designated, pursuant to one or more of the criteria set forth in subparagraphs (a)(ii)(A) through (a)(ii)(C) of Section 1 of the Order, one entity and eight individuals as persons whose property and interests in property are blocked pursuant to the Order.

The listings for these persons on OFAC's List of Specially Designated Nationals and Blocked Persons appear as follows:

Individuals:

1. GOLDBERG, Marina Samuilovna (a.k.a. KALASHOV, Marina; a.k.a. KALASHOVA, Marina), Burj Khalifa, Dubai, United Arab Emirates; DOB 15 Sep 1979; Passport 514763020 (Russia) (individual) [TCO].

2. KIYOTA, Jiro (a.k.a. SIN, Byon-Gyu); DOB 1940; POB Japan (individual) [TCO].

3. UCHIBORI, Kazuo (a.k.a. UCHIBORI, Kazuya); DOB 1952; POB Kawasaki, Kanagawa Prefecture, Japan (individual) [TCO].

4. ZAGARIA, Antonio; DOB 29 Jun 1962; POB San Cipriano D'Aversa, Italy (individual) [TCO].

5. ZAGARIA, Carmine; DOB 27 May 1968; POB San Cipriano D'Aversa, Italy (individual) [TCO].

6. ZAGARIA, Nicola; DOB 10 Oct 1927; POB San Cipriano D'Aversa, Italy (individual) [TCO].

7. ZAGARIA, Pasquale; DOB 05 Jan 1960; POB San Cipriano D'Aversa, Italy (individual) [TCO].

Entity:

1. INAGAWA–KAI, 7–8–4 Roppongi, Minato-ku, Tokyo, Japan [TCO].

Dated: January 23, 2013.

Adam J. Szubin,

Director, Office of Foreign Assets Control.

[FR Doc. 2013–02163 Filed 1–31–13; 8:45 am]

BILLING CODE P

FEDERAL REGISTER

Vol. 78 Friday,

No. 22 February 1, 2013

Part II

Environmental Protection Agency

40 CFR Part 63

National Emission Standards for Hazardous Air Pollutants for Area Sources: Industrial, Commercial, and Institutional Boilers; Final Rule

ENVIRONMENTAL PROTECTION AGENCY

40 CFR Part 63

[EPA–HQ–OAR–2006–0790; FRL–9698–5]

RIN 2060–AR14

National Emission Standards for Hazardous Air Pollutants for Area Sources: Industrial, Commercial, and Institutional Boilers

AGENCY: Environmental Protection Agency (EPA).

ACTION: Final rule; notice of final action on reconsideration.

SUMMARY: In this action, the EPA is taking final action on reconsideration of certain issues related to the emission standards to control hazardous air pollutants from new and existing industrial, commercial and institutional boilers at area sources which were issued under section 112 of the Clean Air Act. As part of this action, the EPA is amending certain compliance dates for the standard and making technical corrections to the final rule to clarify definitions, references, applicability and compliance issues raised by petitioners and other stakeholders affected by the rule. The EPA today is taking final action on the proposed reconsideration.

DATES: This final rule is effective on February 1, 2013. The incorporation by reference of certain publications listed in this final rule were approved by the Director of the Federal Register as of February 1, 2013.

ADDRESSES: The EPA established a single docket under Docket ID No. EPA–HQ–OAR–2006–0790 for this action. All documents in the docket are listed on the *http://www.regulations.gov* Web site. Although listed in the index, some information is not publicly available, *e.g.,* confidential business information or other information whose disclosure is restricted by statute. Certain other material, such as copyrighted material, is not placed on the Internet and will be publicly available only in hard copy form. Publicly available docket materials are available either electronically through *http://www.regulations.gov* or in hard copy at the EPA's Docket Center, Public Reading Room, EPA West Building, Room 3334, 1301 Constitution Avenue NW., Washington, DC 20004. This Docket Facility is open from 8:30 a.m. to 4:30 p.m., Monday through Friday, excluding legal holidays. The telephone number for the Public Reading Room is (202) 566–1744, and the telephone number for the Air Docket is (202) 566–1741.

FOR FURTHER INFORMATION CONTACT: Ms. Mary Johnson, Energy Strategies Group (D243–01), Sector Policies and Programs Division, Office of Air Quality Planning and Standards, Environmental Protection Agency, Research Triangle Park, North Carolina 27711; telephone number: (919) 541–5025; fax number: (919) 541–5450; email address: *johnson.mary@epa.gov.*

Executive Summary

Purpose of This Regulatory Action

The EPA is taking final action on its proposed reconsideration of certain provisions of its March 21, 2011, final rule that established emission standards for the source category of new and existing industrial, commercial, and institutional boilers located at area source facilities listed pursuant to CAA sections 112(c)(3), 112(c)(6), and 112(k)(3)(B).

Section 112(d) of the CAA requires the EPA to regulate HAP from both major and area stationary sources. Section 112(d)(5) of the CAA allows the EPA to establish standards for area sources of HAP ''which provide for the use of generally available control technologies (GACT) or management practices by such sources to reduce emissions of hazardous air pollutants.'' While GACT serves as the basis for standards of most emissions from area source boilers, two pollutants emitted by coal-fired boilers, POM as 7–PAH and Hg, must be regulated based on the performance of MACT. These two pollutants are regulated based on MACT because area source industrial, commercial and institutional boilers combusting coal were listed under section 112(c)(6) of the CAA due to the source categories' emissions of POM and Hg. Section 112(c)(6) requires the EPA to regulate sources listed pursuant to that provision by issuing standards under section 112(d)(2) or (d)(4). The final rule meets this requirement by setting MACT standards for Hg and CO (as a surrogate for POM) for units in the coal-fired subcategory. Further, the final rule sets standards based on GACT for the urban HAP, other than Hg and POM, emitted from coal-fired boilers that pose the greatest public health risk, pursuant to section 112(c)(3) of the CAA, including arsenic, beryllium, cadmium, lead, chromium, manganese, nickel, ethylene dioxide, and PCBs. In addition, the final rule sets standards based on GACT for boilers combusting oil or biomass for urban HAP, including Hg, arsenic, beryllium, cadmium, lead, chromium, manganese, nickel, POM, ethylene dioxide, and PCBs.

In developing the MACT standards for coal-fired boilers, the EPA considered section 112(h) of the CAA, which allows the EPA to establish work practice standards in lieu of numerical emission limits under section 112(d)(2) only in cases where the agency determines that it is not feasible to prescribe or enforce an emission standard. The EPA has set work practice standards for emissions of Hg and POM from small coal-fired boilers, pursuant to section 112(h), in the form of periodic tune-ups.

This final rule amends certain provisions of the final rule issued by EPA on March 11, 2011, and responds to petitions for reconsideration filed by a number of different entities.

Summary of Major Reconsideration Provisions

In general, the final rule requires facilities classified as area sources of HAP with affected boilers to reduce emissions of harmful toxic air emissions from these combustion sources, improving air quality, and protecting public health in communities where these facilities are located.

Recognizing the diversity of this source category and the multiple sectors of the economy this rule affects, the EPA is establishing seven subcategories for boilers based on the design of the combustion equipment and operating schedules of the unit. In addition to the coal, biomass, and oil subcategories in the March 2011 final rule, we are establishing subcategories for seasonal boilers, limited-use boilers, oil-fired boilers with heat input capacity of equal to or less than 5 MMBtu/hr, and certain boilers that use a continuous oxygen trim system.

Numerical emission limits, based on MACT, are established for Hg and CO at new and existing large coal-fired boilers (i.e., with a design heat input capacity of 10 MMBtu/hr or more). A review of the data has resulted in changes to the Hg and CO emission limits contained in the March 2011 final rule. The EPA is also establishing a CEMS alternative compliance option for the numeric CO emission limit. Coal-fired boilers subject to a CO emission limit can comply with the limit using a periodic stack test and CPMS, or by using CEMS. The CO CEMS alternative compliance option is based on a 10-day rolling average and provides additional compliance flexibility to sources with existing CO CEMS equipment. New and existing small coal-fired units (*i.e.,* with a design heat input capacity of less than 10 MMBtu/hr) are subject to periodic tune-up work practices for CO and Hg in lieu of numeric emission limits because the EPA found that it was technologically

and economically impracticable to apply measurement methodology to these small sources, pursuant to CAA section 112(h).

Numerical emission limits, based on GACT, are established for PM as a surrogate for urban metal HAP other than Hg for new large coal-fired boilers. New and existing small coal-fired boilers are subject to periodic tune-up management practices for PM as a surrogate for urban metal HAP other than Hg, and for CO as a surrogate for urban organic HAP other than POM, based on GACT.

New large biomass- and oil-fired boilers are subject to numerical emission limits for PM as a surrogate for urban metal HAP, based on GACT. Existing biomass and oil-fired boilers and new small biomass- and oil-fired boilers are subject to periodic tune-up management practices for PM as a surrogate for urban metal HAP, based on GACT. New and existing biomass- and oil-fired boilers are subject to periodic tune-up management practices for CO as a surrogate for urban organic HAP, based on GACT. Certain other subcategories (seasonal boilers, limited-use boilers, oil-fired boilers with heat input capacity of equal to or less than 5 MMBtu/hr, and boilers with an oxygen trim system) are subject to periodic tune-up work practice or management practice requirements tailored to their schedule of operation and types of fuel.

The compliance date for existing sources is March 21, 2014. The compliance date for new sources that began operations on or before May 20, 2011 is May 20, 2011. For new sources that start up after May 20, 2011, the compliance date is the date of startup. New sources are defined as sources that began operation after June 4, 2010.

Costs and Benefits

This final action is intended to clarify definitions, references, applicability and compliance issues, but not change the coverage of the final rule. The final rule will affect an estimated 180,000 existing area source boilers and the EPA projects that approximately an additional 6,800 new boilers will be subject to the rule over the initial 3-year period. The clarifications should make it easier for owners and operators and for local and state authorities to understand and implement the rule's requirements. As compared to the March 2011 final rule, this final rule will not affect the estimated emission reductions, control costs or the benefits of the rule in substance. This final rule does not impose any additional regulatory requirements beyond those imposed by the previously promulgated boiler area source rule and, in fact, will result in a decrease in regulatory requirements for certain subcategories of boilers. A more detailed discussion of the costs and benefits of the March 2011 final rule is provided at 76 FR 15579, March 21, 2011, and 76 FR 80542, December 23, 2011. Section VI of this preamble provides a discussion of the impacts of this final rule.

SUPPLEMENTARY INFORMATION:

Acronyms and Abbreviations. The following acronyms and abbreviations are used in this document.

7–PAH 7-polynuclear aromatic hydrocarbons
ACI activated carbon injection
ASTM American Society for Testing and Materials
Btu British thermal unit
CO carbon monoxide
CEMS continuous emission monitoring system
CDX Central Data Exchange
CAA Clean Air Act
CFR Code of Federal Regulations
COMS continuous opacity monitoring system
CPMS continuous parameter monitoring system
DOE Department of Energy
ERT Electronic Reporting Tool
ESP electrostatic precipitator
FR Federal Register
GACT generally available control technologies
HAP hazardous air pollutants
Hg mercury
HQ Headquarters
ISO International Standards Organization
lb pounds
MACT maximum achievable control technology
MMBtu million British thermal units
NAA No Action Assurance
NAICS North American Industry Classification System
NESHAP national emission standards for hazardous air pollutants
NSPS new source performance standard
NTTAA National Technology Transfer and Advancement Act
OMB Office of Management and Budget
PCBs polychlorinated biphenyls
PM particulate matter
POM polycyclic organic matter
ppm parts per million
PSD prevention of significant deterioration
RFA Regulatory Flexibility Act
RIN Regulatory Information Number
TBtu trillion British thermal units
TTN Technology Transfer Network
tpy tons per year
UMRA Unfunded Mandates Reform Act of 1995
UPL upper prediction limit
VCS Voluntary Consensus Standards
WWW Worldwide Web

Organization of This Document. The information presented in this preamble is organized as follows:

I. General Information
A. Does this action apply to me?
B. Where can I get a copy of this document?
C. Judicial Review
II. Background Information
III. Summary of Final Action on Reconsideration
A. Affected Sources
B. Source Category Exclusions
C. Emission Limits
D. Tune-Up Work Practice and Management Practice Standards
E. Energy Assessment Work Practice and Management Practice Standards
F. GACT-Based Standards
G. Initial Compliance
H. Operating Limits
I. Continuous Compliance
J. Periods of Startup and Shutdown
K. Affirmative Defense Language
L. Notification, Recordkeeping and Reporting Requirements
M. Title V Permitting Requirements
N. Definition of Period of Gas Curtailment or Supply Interruption
O. Miscellaneous Technical Corrections
P. Other Issues
IV. Summary of Significant Changes Since Proposed Action on Reconsideration
A. Applicability
B. Tune-Up Requirements
C. Energy Assessment
D. Clarification of Oxygen Concentration Operating Limits
E. Definitions Regarding Averaging Times
F. Fuel Sampling Frequency
G. Performance Testing Frequency
H. Startup and Shutdown Definitions
I. Notifications
J. Miscellaneous Definitions
V. Other Actions the EPA Is Taking
VI. Impacts Associated With This Final Rule
VII. Statutory and Executive Order Reviews
A. Executive Order 12866: Regulatory Planning and Review and Executive Order 13563: Improving Regulation and Regulatory Review
B. Paperwork Reduction Act
C. Regulatory Flexibility Act
D. Unfunded Mandates Reform Act
E. Executive Order 13132: Federalism
F. Executive Order 13175: Consultation and Coordination With Indian Tribal Governments
G. Executive Order 13045: Protection of Children From Environmental Health Risks and Safety Risks
H. Executive Order 13211: Actions Concerning Regulations That Significantly Affect Energy Supply, Distribution, or Use
I. National Technology Transfer and Advancement Act
J. Executive Order 12898: Federal Actions To Address Environmental Justice in Minority Populations and Low-Income Populations
K. Congressional Review Act

I. General Information

A. Does this action apply to me?

The regulated categories and entities potentially affected by this action include:

Industry category	NAICS Code [a]	Examples of regulated entities
Any area source facility using a boiler as defined in the final rule.	321	Wood product manufacturing.
	11	Agriculture, greenhouses.
	311	Food manufacturing.
	327	Nonmetallic mineral product manufacturing.
	424	Wholesale trade, nondurable goods.
	531	Real estate.
	611	Educational services.
	813	Religious, civic, professional, and similar organizations.
	92	Public administration.
	722	Food services and drinking places.
	62	Health care and social assistance.
	22111	Electric power generation.

[a] North American Industry Classification System.

This table is not intended to be exhaustive, but rather provides a guide for readers regarding entities likely to be regulated by this final action. To determine whether your facility may be affected by this action, you should examine the applicability criteria in 40 CFR 63.11193 of subpart JJJJJJ (National Emission Standards for Hazardous Air Pollutants for Industrial, Commercial, and Institutional Boilers Area Sources). If you have any questions regarding the applicability of this final rule to a particular entity, consult either the air permit authority for the entity or your EPA regional representative, as listed in 40 CFR 63.13 of subpart A (General Provisions).

B. Where can I get a copy of this document?

In addition to being available in the docket, an electronic copy of this action will also be available on the WWW through the TTN. Following signature, a copy of the action will be posted on the TTN's policy and guidance page for newly proposed or promulgated rules at the following address: *http://www.epa.gov/ttn/oarpg/*. The TTN provides information and technology exchange in various areas of air pollution control.

C. Judicial Review

Under the CAA section 307(b)(1), judicial review of this final rule is available only by filing a petition for review in the U.S. Court of Appeals for the District of Columbia Circuit by April 2, 2013. Under CAA section 307(d)(7)(B), only an objection to this final rule that was raised with reasonable specificity during the period for public comment can be raised during judicial review.

Under CAA section 307(b)(2), the requirements established by this final rule may not be challenged separately in any civil or criminal proceedings brought by EPA to enforce these requirements.

II. Background Information

Section 112(d) of the CAA requires the EPA to establish NESHAP for both major and area sources of HAP that are listed for regulation under CAA section 112(c). A major source is any stationary source that emits or has the potential to emit 10 tpy or more of any single HAP or 25 tpy or more of any combination of HAP. An area source is a stationary source that is not a major source.

On March 21, 2011 (76 FR 15554), the EPA issued the NESHAP for industrial, commercial and institutional area source boilers pursuant to CAA sections 112(c)(3), 112(c)(6), and 112(k)(3)(B).

CAA section 112(k)(3)(B) directs the EPA to identify at least 30 HAP that, as a result of emissions from area sources, pose the greatest threat to public health in the largest number of urban areas. The EPA implemented this provision in 1999 in the Integrated Urban Air Toxics Strategy, (64 FR 38715, July 19, 1999) (Strategy). Specifically, in the Strategy, the EPA identified 30 HAP that pose the greatest potential health threat in urban areas, and these HAP are referred to as the ''30 urban HAP.'' Section 112(c)(3) of the CAA requires the EPA to list sufficient categories or subcategories of area sources to ensure that area sources representing 90 percent of the emissions of the 30 urban HAP are subject to regulation. Under CAA section 112(d)(5), the EPA may elect to promulgate standards or requirements for area sources ''which provide for the use of generally available control technologies (''GACT'') or management practices by such sources to reduce emissions of hazardous air pollutants.''

CAA section 112(c)(6) requires that the EPA list categories and subcategories of sources assuring that sources accounting for not less than 90 percent of the aggregate emissions of each of seven specified HAP are subject to standards under CAA sections 112(d)(2) or (d)(4), which require the application of the more stringent MACT. The seven HAP specified in CAA section 112(c)(6) are as follows: Alkylated lead compounds, POM, hexachlorobenzene, Hg, PCBs, 2,3,7,8-tetrachlorodibenzofuran, and 2,3,7,8-tetrachlorodibenzo-p-dioxin.

As noted in the preamble to the final rule, (76 FR 15556, March 21, 2011), we listed area source industrial boilers and commercial/institutional boilers combusting coal under CAA section 112(c)(6) based on the source categories' contribution of Hg and POM, and under CAA section 112(c)(3) for their contribution of arsenic, beryllium, cadmium, lead, chromium, manganese, nickel, ethylene dioxide, and PCBs, as well as Hg and POM. We promulgated final standards for coal-fired area source boilers to reflect the application of MACT for Hg and POM, and to reflect GACT for the urban HAP other than Hg and POM.

We listed industrial and commercial/institutional boilers combusting oil or biomass under CAA section 112(c)(3) for their contribution of Hg, arsenic, beryllium, cadmium, lead, chromium, manganese, nickel, POM, ethylene dioxide, and PCBs. For boilers firing oil or biomass, the final standards reflect GACT for all of the urban HAP.

On March 21, 2011, we also published a notice to initiate the reconsideration of certain aspects of the final rule for area source industrial, commercial and institutional boilers (76 FR 15266). The reconsideration notice identified several provisions of the final rule where additional public comment was appropriate. The notice also identified several issues of central relevance to the rulemaking where reconsideration was appropriate under CAA section 307(d).

Following promulgation of the final rule, the EPA also received petitions for reconsideration from the following organizations (Petitioners): American

Sugar Cane League of the U.S.A., Alaska Oil and Gas Association, American Coke and Coal Chemicals Institute, American Iron and Steel Institute, American Petroleum Institute, Council of Industrial Boiler Owners, Industry Coalition (American Forest and Paper Association (AF&PA) et. al.), National Petrochemical and Refiners Association, Sierra Club, and the State of Washington Department of Ecology. Petitioners, pursuant to CAA section 307(d)(7)(B), requested that the EPA reconsider numerous provisions in the rules. On December 23, 2011, the EPA granted the petitions for reconsideration on certain issues, and proposed certain revisions to the final rule in response to the reconsideration petitions and to address the issues that the EPA previously identified as warranting reconsideration. That proposal solicited comment on several specific aspects of the rule, including:

- Establishing separate requirements for seasonally operated boilers.
- Addressing temporary boilers.
- Clarifying the initial compliance schedule for existing boilers subject to tune-ups.
- Defining periods of gas curtailment.
- Providing an optional CO compliance mechanism using CEMS.
- Averaging times for parameter monitoring.
- Providing an affirmative defense for malfunction events.
- Adjusting frequency of tune-up work practices for very small units.
- Selecting a 99 percent confidence interval for setting the CO emission limit.
- Establishing GACT-based limits for biomass and oil-fired boilers.
- Scope and duration of the energy assessment and deadline for completing the assessment.
- Revising GACT-based limits for PM at new oil-fired boilers.
- Exempting area sources from title V permitting requirements.

In this action, the EPA is finalizing multiple changes to this NESHAP after considering public comments on the items under reconsideration.

III. Summary of Final Action on Reconsideration

As stated above, the December 23, 2011, proposed rule addressed specific issues and provisions the EPA identified for reconsideration. This summary reflects the agency's final action in regards to those provisions identified for reconsideration and on other discrete matters identified in response to comments or data received during the comment period.

A. Affected Sources

This final rule amends 40 CFR 63.11194 to specify that an existing dual-fuel fired boiler (*i.e.,* commenced construction or reconstruction on or before June 4, 2010) meeting the definition of gas-fired boiler, as defined in 40 CFR 63.11237, that meets the applicability requirements of subpart JJJJJJ after June 4, 2010 due to a fuel switch from gaseous fuel to solid fossil fuel, biomass, or liquid fuel is considered to be an existing source under this subpart as long as the boiler was designed to accommodate the alternate fuel. A new or reconstructed dual-fuel fired boiler (*i.e.,* commenced construction or reconstruction after June 4, 2010) meeting the definition of gas-fired boiler, as defined in 40 CFR 63.11237, that meets the applicability criteria of subpart JJJJJJ after June 4, 2010 due to a fuel switch from gaseous fuel to solid fossil fuel, biomass, or liquid fuel is considered to be a new source under this subpart.

B. Source Category Exclusions

This final rule amends the list of boilers that are not part of the source categories subject to subpart JJJJJJ. We are revising this list (as set forth in 40 CFR 63.11195) to clarify certain boiler types and to include certain additional boilers that may be located at an industrial, commercial or institutional area source facility. These revisions of the source categories are described below.

1. Electric Boilers

The EPA is amending 40 CFR 63.11195 by adding electric boilers to the list of boilers not subject to subpart JJJJJJ. Electric boilers are defined in 40 CFR 63.11237 as follows:

Electric boiler means a boiler in which electric heating serves as the source of heat. Electric boilers that burn gaseous or liquid fuel during periods of electrical power curtailment or failure are included in this definition.

2. Residential Boilers

The EPA is amending 40 CFR 63.11195 by adding residential boilers to the list of boilers not subject to subpart JJJJJJ. We are clarifying that a residential boiler may be part of a residential combined heat and power system and that a boiler serving a single unit residence dwelling that has since been converted or subdivided into condominiums or apartments may also be considered a residential boiler. Residential boilers are defined in 40 CFR 63.11237 as follows:

Residential boiler means a boiler used to provide heat and/or hot water and/or as part of a residential combined heat and power system. This definition includes boilers located at an institutional facility (*e.g.,* university campus, military base, church grounds) or commercial/industrial facility (*e.g.,* farm) used primarily to provide heat and/or hot water for:

(1) A dwelling containing four or fewer families, or

(2) A single unit residence dwelling that has since been converted or subdivided into condominiums or apartments.

3. Temporary Boilers

The EPA is amending 40 CFR 63.11195 by adding temporary boilers to the list of boilers not subject to subpart JJJJJJ. Similar to residential boilers, we did not intend to regulate temporary boilers under the area source standards because they are not part of either the industrial boiler source category or the commercial/institutional boiler source category. We note that neither the CAA section 112(c)(6) inventory nor the CAA section 112(c)(3) inventory included temporary boilers. In this final action, the EPA is simply clarifying the scope of categories regulated by subpart JJJJJJ. By their nature of being temporary, these boilers are operating in place of another non-temporary boiler while that boiler is being constructed, replaced or repaired, in which case we would have counted the non-temporary boiler as one being regulated. Additionally, the final major source rule for boilers excludes temporary boilers.

The definition of ''temporary boiler'' specifies that a boiler is not a temporary boiler if it remains at a location within the facility and performs the same or similar function for more than 12 consecutive months unless the regulatory agency approves an extension. The definition of ''temporary boiler'' also specifies that any temporary boiler that replaces a temporary boiler at a location within the facility and performs the same or similar function will be included in calculating the consecutive time period unless there is a gap in operation of 12 months or more. Temporary boilers are defined in 40 CFR 63.11237 as follows:

Temporary boiler means any gaseous or liquid fuel boiler that is designed to, and is capable of, being carried or moved from one location to another by means of, for example, wheels, skids, carrying handles, dollies, trailers, or platforms. A boiler is not a temporary boiler if any one of the following conditions exists:

(1) The equipment is attached to a foundation.

(2) The boiler or a replacement remains at a location within the facility and performs the same or similar function for more than 12 consecutive months, unless the regulatory agency approves an extension. An extension may be granted by the regulatory agency

upon petition by the owner or operator of a unit specifying the basis for such a request. Any temporary boiler that replaces a temporary boiler at a location within the facility and performs the same or similar function will be included in calculating the consecutive time period unless there is a gap in operation of 12 months or more.

(3) The equipment is located at a seasonal facility and operates during the full annual operating period of the seasonal facility, remains at the facility for at least 2 years, and operates at that facility for at least 3 months each year.

(4) The equipment is moved from one location to another within the facility but continues to perform the same or similar function and serve the same electricity, steam, and/or hot water system in an attempt to circumvent the residence time requirements of this definition.

4. Boilers With Section 3005 Permits

The EPA is clarifying the language in 40 CFR 63.11195(c) to provide an exclusion stating ''unless such units do not combust hazardous waste and combust comparable fuels'' such that it reads: ''A boiler required to have a permit under section 3005 of the Solid Waste Disposal Act or covered by subpart EEE of this part (*e.g.,* hazardous waste boilers), unless such units do not combust hazardous waste and combust comparable fuels.''

5. Boilers Used as Control Devices

The EPA is amending the language in 40 CFR 63.11195(g) to clarify that any boiler that is used as a control device to comply with a subpart under part 60, 61, or 65 of chapter 40 is not subject to subpart JJJJJJ provided that at least 50 percent of the heat input to the boiler is provided by the gas stream that is regulated under another subpart.

C. Emission Limits

1. Hg Emission Limit for Coal-Fired Boilers

The EPA is amending the Hg emission limit for large coal-fired boilers to 0.000022 lb per MMBtu based on a revised analysis. The revised analysis excludes data for a utility boiler that were erroneously used as the basis for the Hg emission limit included in the March 2011 final rule. Further discussion of this revision to the Hg emission limit is located in the December 23, 2011, proposal (76 FR 80541).

A memorandum ''*Beyond-the-Floor Analysis for Mercury and Carbon Monoxide*'' located in the docket for the rulemaking describes our beyond-the-floor analysis for Hg and CO emissions from new and existing area source coal-fired boilers with heat input capacity of 10 MMBtu/hr or greater. In the beyond-the-floor option for Hg emissions, new and existing coal-fired boilers would be required to comply with a Hg emission limit more stringent than the MACT floor-based emission limit of 2.2×10^{-5} lb of Hg per MMBtu. To comply with a limit more stringent than the fabric filter-based MACT floor limit, it is expected that an affected boiler would need to employ fabric filter control along with ACI. In summary, we determined that the beyond-the-floor option of installing ACI for Hg control from area source coal-fired boilers is not economically feasible.

As discussed in the preamble to the June 2010 proposed rule (75 FR 31896) and the preamble to the March 2011 final rule (76 FR 15554), we also considered whether fuel switching was an appropriate control technology for purposes of determining either the MACT floor level or beyond-the-floor level of control. We determined that fuel switching was not an appropriate floor or beyond-the-floor control. As also discussed in the June 2010 and March 2011 preambles, we determined that an energy assessment requirement was an appropriate beyond-the-floor option for existing large boilers. These previous analyses continue to be applicable for mercury.

2. Using the UPL for Setting the CO Emission Limit

The EPA is amending the CO emission limit for coal-fired boilers to reflect a revised analysis that uses the 99 percent confidence level in determining the UPL. Based on the results of the revised analysis, we are amending the CO emission limit for new and existing coal-fired boilers from 400 ppm by volume on a dry basis, corrected to 3 percent oxygen, to 420 ppm by volume on a dry basis, corrected to 3 percent oxygen.

As discussed in the ''*Beyond-the-Floor Analysis for Mercury and Carbon Monoxide*'' memorandum, to comply with a limit more stringent than the MACT floor based CO limit, it is expected that new and existing area source coal-fired boilers with heat input capacity of 10 MMBtu/hr or greater may need to install an oxidation catalyst. As fully explained in the memorandum, we determined that the beyond-the-floor option of installing an oxidation catalyst for CO control was technically infeasible. Other methods of reducing CO emissions, such as upgrading new burners and overfire air systems, were also considered and determined to be technically infeasible options. As explained earlier in this preamble, we determined that fuel switching was not an appropriate floor or beyond-the-floor control and that an energy assessment requirement was an appropriate beyond-the-floor option for existing large boilers. These previous analyses continue to be applicable for CO.

3. Compliance Alternative for PM for Certain Oil-Fired Boilers

The EPA is amending the applicability of PM emission limit requirements for certain new or reconstructed oil-fired boilers. We are amending 40 CFR 63.11210 to specify that new or reconstructed oil-fired boilers satisfy GACT for PM when they combust only oil that contains no more than 0.50 weight percent sulfur or a mixture of 0.50 weight percent sulfur oil with other fuels not subject to a PM emission limit under this subpart and do not use a post-combustion technology (except a wet scrubber) to reduce PM or sulfur dioxide emissions.

D. Tune-Up Work Practice and Management Practice Standards

1. Requirements for Seasonally Operated Boilers

The EPA is establishing separate requirements for a subcategory of boilers that are seasonally operated. For seasonally operated boilers, we are amending 40 CFR 63.11223 to specify that these boilers are required to complete a tune-up every 5 years, instead of on a biennial basis as is required for most non-seasonal boilers. Specifically, existing seasonal boilers are required to complete the initial tune-up by March 21, 2014, and a subsequent tune-up every 5 years after the initial tune-up. New and reconstructed seasonal boilers are not required to complete an initial tune-up, but are required to complete a tune-up every 5 years after the initial startup of the new or reconstructed boiler.[1] A combined total of 15 days of periodic testing of the seasonal boiler during the 7-month shutdown is allowed. The definition of ''seasonal boiler'' clarifies that it only applies to biomass- or oil-fired boilers. Seasonally operated boilers are defined in 40 CFR 63.11237 as follows:

Seasonal boiler means a boiler that undergoes a shutdown for a period of at least 7 consecutive months (or 210 consecutive days) each 12-month period due to seasonal conditions, except for periodic testing. Periodic testing shall not exceed a combined total of 15 days during the 7-month shutdown. This definition only applies to

[1] Generally, boilers are initially installed optimized for efficiency, *i.e.*, ''in tune.'' Periodic tune-ups restore a boiler to its efficient state, given its age and other parameters. We do not require a tune-up upon startup because boilers normally would already be efficient at that time. Emission reductions are projected to occur by maintaining efficient combustion through periodic tune-ups.

boilers that would otherwise be included in the biomass subcategory or the oil subcategory.

2. Requirements for Small Oil-Fired Units

The EPA is establishing separate requirements for a subcategory of oil-fired boilers with a heat input capacity of equal to or less than 5 MMBtu/hr. We are amending 40 CFR 63.11223 to specify that this subcategory of small oil-fired boilers are required to complete a tune-up every 5 years, instead of on a biennial basis as is required for most larger oil-fired boilers. Specifically, existing oil-fired boilers with a heat input capacity of equal to or less than 5 MMBtu/hr are required to complete the initial tune-up by March 21, 2014, and a subsequent tune-up every 5 years after the initial tune-up. New and reconstructed oil-fired boilers with a heat input capacity of equal to or less than 5 MMBtu/hr are not required to complete an initial tune-up, but are required to complete a tune-up every 5 years after the initial startup of the new or reconstructed boiler.

3. Requirements for Boilers With Oxygen Trim Systems

The EPA is establishing separate requirements for boilers with oxygen trim systems that maintain an optimum air-to-fuel ratio that would otherwise be subject to a biennial tune-up. We are amending 40 CFR 63.11223 to specify that this subcategory of boilers is required to complete a tune-up every 5 years. Specifically, existing boilers with oxygen trim systems are required to complete the initial tune-up by March 21, 2014, and a subsequent tune-up every 5 years after the initial tune-up. New and reconstructed boilers with oxygen trim systems are not required to complete an initial tune-up, but are required to complete a tune-up every 5 years after the initial startup of the new or reconstructed boiler.

4. Requirements for Limited-Use Boilers

The EPA is establishing separate requirements for a subcategory of boilers that operate on a limited basis. The limited-use subcategory includes any boiler that burns any amount of solid or liquid fuels and has a federally enforceable average annual capacity factor of no more than 10 percent. For limited-use boilers, we are amending 40 CFR 63.11223 of the final rule to specify that these boilers are required to complete a tune-up every 5 years. Specifically, existing limited-use boilers are required to complete the initial tune-up by March 21, 2014, and a subsequent tune-up every 5 years after the initial tune-up. New and reconstructed limited-use boilers are not required to complete an initial tune-up, but are required to complete a tune-up every 5 years after the initial startup of the new or reconstructed boiler. Limited-use boilers are not subject to the emission limits in Table 1 to the subpart, the energy assessment requirements in Table 2 to the subpart, or the operating limits in Table 4 to the subpart.

E. Energy Assessment Work Practice and Management Practice Standards

1. Scope

The EPA is amending the definition of ''energy assessment'' to clarify that the scope of the energy assessment does not encompass energy use systems located off-site or energy use systems using electricity purchased from an off-site source. The energy assessment is limited to only those energy use systems, located on-site, associated with the affected boilers. We are also clarifying that the scope of the assessment is based on energy use by discrete segments of a facility (*e.g.,* production area or building) and not by a total aggregation of all individual energy using segments of a facility.

The definition of ''boiler system'' is being revised in this final rule to clarify that it means the boiler and associated components directly connected to and serving the energy use systems. We are amending the definition of ''energy use system'' to clarify that energy use systems are only those systems using energy clearly produced by affected boilers.

We are clarifying that energy assessor approval and qualification requirements are waived in instances where an energy assessment completed on or after January 1, 2008 meets or is amended to meet the energy assessment requirements in this final rule by March 21, 2014. Finally, we are specifying that a source that is operating under an energy management program established through energy management systems compatible with ISO 50001, that includes the affected boilers, by March 21, 2014, satisfies the energy assessment requirement. We consider these energy management programs to be equivalent to the one-time energy assessment because facilities having these programs operate under a set of practices and procedures designed to manage energy use on an ongoing basis. These programs contain energy performance measurements and tracking plans with periodic reviews.

2. Compliance Date

As specified in 40 CFR 63.11196(a)(3), existing boilers that are subject to the energy assessment requirement must achieve compliance with the energy assessment requirement no later than March 21, 2014. Thus, in order to meet the requirements of the rule, energy assessments must, therefore, be completed by the compliance date (March 21, 2014) for existing sources.

3. Maximum Duration Requirements

The EPA is amending the definition of ''energy assessment'' for facilities with affected boilers with less than 0.3 TBtu/yr heat input capacity and for facilities with affected boilers with 0.3 to 1 TBtu/yr heat input capacity to change the maximum time to conduct the energy assessment from one day to 8 on-site technical hours and from three days to 24 on-site technical hours, respectively, and to allow sources to perform longer assessments at their discretion. We are also amending the definition of ''energy assessment'' for facilities with affected boilers with greater than 1 TBtu/yr heat input capacity to specify that the maximum time to conduct the assessment is up to 24 on-site technical hours for the first TBtu/yr plus 8 on-site technical hours for every additional 1.0 TBtu/yr not to exceed 160 on-site technical hours, but may be longer at the discretion of the owner or operator.

F. GACT-Based Standards

1. Establishing GACT-Based Emission Limits for Biomass- and Oil-Fired Boilers

The EPA is not amending the GACT-based standards, as specified in the March 21, 2011, final rule, for biomass- and oil-fired boilers. Specifically, the final standards for biomass- and oil-fired area source boilers are based on GACT instead of MACT as were the proposed standards for all pollutants except POM. Our rationale for the changes between proposal and promulgation for the biomass- and oil-fired boilers, including not requiring MACT for POM, can be found in the preamble to the promulgated area source standards (76 FR 15565–15567 and 15574–15575, March 21, 2011). The final standards for area source biomass- and oil-fired boilers require these boilers to meet the following standards:

New boilers with heat input capacity greater than 10 MMBtu/hr that are biomass-fired or oil-fired must meet GACT-based numerical emission limits for PM.

New boilers with heat input capacity greater than 10 MMBtu/hr that are biomass-fired or oil-fired must comply

with work practice standards to minimize the boiler's startup and shutdown periods following the manufacturer's recommendations, or the manufacturer's recommendations for a unit of similar design.

Existing boilers with heat input capacity greater than 10 MMBtu/hr that are biomass-fired or oil-fired must have a one-time energy assessment performed by a qualified energy assessor, an energy assessment completed on or after January 1, 2008 that meets or is amended to meet the energy assessment requirements in this final rule by March 21, 2014, or an energy management program established through energy management systems compatible with ISO 50001, that includes the affected boilers, by March 21, 2014, under which the owner or operator currently operates.

All new and existing units, regardless of size, that are biomass-fired or oil-fired must have a GACT-based periodic tune-up.

2. Setting GACT-Based PM Standards for New Oil-Fired Boilers

The EPA is not making any changes to the PM limit for new oil-fired boilers. New oil-fired boilers with heat input capacity greater than 10 MMBtu/hr must meet a GACT-based numerical emission limit for PM (0.03 lb per MMBtu of heat input). New oil-fired units, regardless of size, must have a GACT-based periodic tune-up. Our rationale for finalizing GACT-based PM emissions limits can be found in the preamble to the promulgated area source standards (76 FR 15574, March 21, 2011).

G. Initial Compliance

1. Dates

Some commenters have argued that the 3-year compliance deadline of March 21, 2014, for existing sources to meet the standards does not provide sufficient time for sources to meet the standards in view of the large number of sources subject to the rule and that these sources will be competing for the needed resources and materials from engineering consultants, permitting authorities, equipment vendors, construction contractors, financial institutions, and other critical suppliers.

As an initial matter, we note that many sources subject to the standards should be able to meet the standards within 3 years (*i.e.,* by March 21, 2014), even those that need to install pollution control technologies to do so. In addition, many sources subject to the standards are existing biomass- or oil-fired boilers or small coal-fired boilers (less than 10 MMBtu/hr) and will not need to install controls in order to demonstrate compliance, as these sources are subject only to work practices or management practices.

At the same time, the CAA allows title V permitting authorities to grant sources, on a case-by-case basis, extensions to the compliance time of up to 1 year if such time is needed for the installation of controls. *See* CAA section 112(i)(3)(B)). Permitting authorities are already familiar with, and in many cases have experience with, applying the 1-year extension authority under section 112(i)(3)(B) since the provision applies to all NESHAP. *See* 40 CFR 63.6(i)(4)(A). We believe that should the range of circumstances that commenters have cited as impeding sources' ability to install controls within 3 years materialize, then permitting authorities can take those circumstances into consideration when evaluating an existing source's request for a 1-year extension, and where such applications prove to be well-founded, permitting authorities can make the 1-year extension available to applicants.

In making a determination as to whether an extension is appropriate, we believe it is reasonable for permitting authorities to consider the large number of pollution control retrofit projects being undertaken for purposes of complying either with the standards in this rule or with those of other rules such as the Major Source Boilers Standards and the Mercury and Air Toxics Standards for the power sector that may be competing for similar resources.

Further, commenters have pointed out that in some cases operators of existing sources that are subject to these standards and that generate energy may opt to meet the standards by terminating operations at these sources and building new sources to replace the energy generation at the shut-down sources. While the ultimate discretion to provide a 1-year extension lies with the permitting authority, the EPA believes that it may be reasonable for permitting authorities to allow the fourth year extension for the installation of replacement sources of energy generation at the site of a facility applying for an extension for that purpose. Specifically, the EPA believes where an applicant demonstrates that it is building replacement sources of energy generation for purposes of meeting the requirements of these standards, such a replacement project could be deemed to constitute the ''installation of controls'' under section 112(i)(3)(B).

In sum, the EPA believes that although most, if not all, units will be able to fully comply with the standards within 3 years, the fourth year that permitting authorities are allowed to grant for installation of controls is an important flexibility that will address situations where an extra year is necessary.

2. Demonstrating Initial Compliance

The EPA is amending 40 CFR 63.11210 to clarify the dates by which new and reconstructed boilers need to demonstrate initial compliance. We are amending 40 CFR 63.11210(d) to clarify that only boilers that are subject to emission limits for PM, Hg or CO in Table 1 to subpart JJJJJJ have a 180-day period after the applicable compliance date to demonstrate initial compliance.

We are adding a new paragraph (i) to 40 CFR 63.11210 to clarify the initial compliance requirements for boilers located at existing major sources of HAP that become area sources on a timely basis. Any such existing boiler at the existing source must demonstrate compliance with subpart JJJJJJ within 180 days of the later of March 21, 2014 or upon the existing major source commencing operation as an area source. Any new or reconstructed boiler at the existing source must demonstrate compliance with subpart JJJJJJ within 180 days of the later of March 21, 2011 or startup. Notification of such changes must be submitted according to 40 CFR 63.11225(g).

We are adding a new paragraph (j) to 40 CFR 63.11210 that specifies initial compliance demonstration requirements for existing affected boilers that have not operated between the effective date of the rule and the source's compliance date. Owners and operators of boilers subject to emission limits must complete the initial compliance demonstration no later than 180 days after the re-start of the affected boiler, sources subject to tune-up requirements must complete the initial performance tune-up no later than 30 days after the re-start of the affected boiler, and sources subject to the one-time energy assessment must complete the assessment no later than the compliance date specified in 40 CFR 63.11196.

3. Schedule for Existing Boilers Subject to Tune-Up Requirements

The EPA is amending 40 CFR 63.11196 to specify that all existing boilers subject to the tune-up requirement have 3 years (by March 21, 2014) in which to demonstrate initial compliance, instead of 1 year as specified in the 2011 final rule (76 FR 15554, March 21, 2011) or 2 years as specified in the proposed reconsideration of final rule action (76

FR 80532, December 23, 2011). In the December 23, 2011, proposal, we specifically requested comment on whether the initial compliance period for the tune-up requirement should be extended to March 21, 2014.

4. Conducting Initial Tune-Ups at New and Reconstructed Sources

The EPA is removing the requirement for an initial tune-up for new and reconstructed boilers. Thus, new and reconstructed units are required to complete the applicable biennial or 5-year tune-up no later than 25 months or 61 months, respectively, after the initial startup of the new or reconstructed boiler.

5. Fuel Requirements

The EPA is amending 40 CFR 63.11223(a) to specify that boiler tune-ups must be conducted while burning the type of fuel that provided the majority of the heat input to the boiler over the 12 months prior to the tune-up.

H. Operating Limits

1. Operating Limits for Oxygen Concentration

The EPA is clarifying that the oxygen concentration must be at or above the minimum established during a performance stack test. These limits have also been clarified to be applicable when the unit is firing the fuel or fuel mixture utilized during the CO performance test.

2. Maximum Operating Load

The EPA is including provisions for establishing a unit-specific limit for maximum operating load that applies to any boiler subject to an emission limit for which compliance is demonstrated by a performance stack test. Operating load data includes fuel feed rate data or steam generation rate data.

3. Establishing Operating Limits for Wet Scrubbers

The EPA is amending the operating limit provisions in 40 CFR 63.11211(b)(2) for an ESP operated with a wet scrubber to remove the statement that the operating limits for ESP do not apply to dry ESP systems operated without a wet scrubber.

I. Continuous Compliance

1. CO Emission Limit

The March 2011 final rule requires sources subject to a CO emission limit to demonstrate compliance by measuring CO emissions while also monitoring the oxygen content of the exhaust. We are amending the monitoring requirements in 40 CFR 63.11224(a) to allow sources subject to a CO emission limit the option to install, operate, and maintain CO and oxygen CEMS. The CEMS must be installed, operated and maintained according to Performance Specifications 3 and 4, 4A, or 4B at 40 CFR part 60, appendix B, and according to the site-specific monitoring plan that each facility is required to develop. The CEMS will also be required to complete a performance evaluation, also according to Performance Specifications 3 and 4, 4A, or 4B.

Sources have the option to demonstrate continuous compliance by monitoring both CO and oxygen using CEMS to demonstrate compliance with the CO emission limit, corrected to 3 percent oxygen, or monitoring and complying with an oxygen content operating limit that is established during the performance stack test. Sources that use CO and oxygen CEMS are not required to perform initial CO performance testing nor are they subject to oxygen content operating limit requirements. Sources that choose to demonstrate continuous compliance by monitoring and complying with an oxygen content operating limit must install, operate, and maintain an oxygen analyzer system at or above the minimum percent oxygen by volume that is established as the operating limit for oxygen when firing the fuel or fuel mixture utilized during the most recent CO performance stack test. We have removed the requirement that the oxygen monitor be located at the outlet of the boiler, so that it can be located either within the combustion zone or at the outlet as a flue gas oxygen monitor.

We are amending the oxygen monitoring requirements to allow for the use of oxygen trim systems and have included oxygen trim systems in the definition of ''oxygen analyzer system.'' We have clarified that operation of oxygen trim systems to meet the oxygen monitoring requirements shall not be done in a manner that compromises furnace safety. The definitions of ''oxygen analyzer system'' and ''oxygen trim system'' in 40 CFR 63.11237 read as follows:

- *Oxygen analyzer system* means all equipment required to determine the oxygen content of a gas stream and used to monitor oxygen in the boiler flue gas, boiler firebox, or other appropriate intermediate location. This definition includes oxygen trim systems.
- *Oxygen trim system* means a system of monitors that is used to maintain excess air at the desired level in a combustion device. A typical system consists of a flue gas oxygen and/or carbon monoxide monitor that automatically provides a feedback signal to the combustion air controller.

2. Tune-Up Standards

The EPA is amending the requirements for demonstrating continuous compliance with the work practice and management practice tune-up standards in 40 CFR 63.11223 to clarify that CO measurements that are required before and after tune-up adjustments may be taken using a portable CO analyzer. We are clarifying that the requirements to inspect the burner and the system controlling the air-to-fuel ratio may be delayed until the next scheduled shutdown. We are also clarifying that units that produce electricity for sale may delay these inspections until the first outage, not to exceed 36 months from the previous inspection. In addition, we are clarifying that optimization of CO emissions should be consistent with any NO_X requirements to which the unit is subject. Finally, we are specifying for units that are not operating on the required date for a tune-up, the tune-up must be conducted within 30 days of startup.

3. Performance Testing Frequency

The EPA is amending 40 CFR 63.11220 to specify in paragraph (b) that the owner or operator of an affected boiler does not need to conduct further PM emissions testing if, when demonstrating initial compliance with the PM emission limit, the performance test results show that the PM emissions are equal to or less than half of the PM emission limit. The owner or operator must continue to comply with all applicable operating limits and monitoring requirements. If the initial performance test results show that the PM emissions are greater than half of the PM emission limit, the owner or operator must conduct subsequent performance tests as specified in 40 CFR 63.11220(a).

We are clarifying in 40 CFR 63.11220(d) that existing affected boilers that have not operated since the previous compliance demonstration must complete their subsequent compliance demonstration no later than 180 days after the re-start of the affected boiler.

4. Fuel Analysis

The EPA is amending 40 CFR 63.11220 to specify in paragraph (c) that the owner or operator of an affected coal-fired boiler does not need to conduct further fuel analysis sampling if, when demonstrating initial compliance with the Hg emission limit, the Hg constituents in the fuel or fuel

mixture are measured to be equal to or less than half of the Hg emission limit. The owner or operator must continue to comply with all applicable operating limits and monitoring requirements.

When demonstrating initial compliance with the Hg emission limit, if the Hg constituents in the fuel or fuel mixture are greater than half of the Hg emission limit, the owner or operator must conduct quarterly sampling.

5. Averaging Times

The EPA is amending the averaging time for parameter monitoring and compliance with operating limits to a 30-day rolling average.

The EPA is revising the definitions of ''30-day rolling average'' and ''daily block average'' to exclude periods of startup and shutdown and periods when the unit is not operating in the calculation of the arithmetic mean.

6. Monitoring Data

The EPA is clarifying in 40 CFR 63.11221 the monitoring data collection requirements.

J. Periods of Startup and Shutdown

1. Definitions

The EPA is revising the definitions of ''startup'' and ''shutdown'' such that they are tailored for industrial boilers and are consistent with the definitions of ''startup'' and ''shutdown'' in the 40 CFR part 63, subpart A General Provisions. The revised definitions reflect the fact that industrial boilers function to provide steam or, in the case of cogeneration units, electricity. We are defining startup as the period between either the first-ever firing of fuel in the boiler or the firing of fuel in the boiler after a shutdown and when the boiler first supplies steam or heat. We are defining shutdown as the period between either when no more steam or heat is supplied by the boiler or no fuel is being fired in the boiler and when there is no steam and no heat being supplied and no fuel being fired in the boiler.

2. Compliance With Operating Limits

The EPA has clarified that operating limits must be met at all times except during periods of startup and shutdown.

3. Minimization of Startup and Shutdown Periods

The EPA is amending 40 CFR 63.11223(g) to include biomass- and oil-fired boilers in the requirement to minimize the time spent in startup and shutdown periods. Specifically, the requirement is to minimize the boiler's startup and shutdown periods and conduct startups and shutdowns according to the manufacturer's recommended procedures. If manufacturer's recommended procedures are not available, recommended procedures for a unit of similar design for which manufacturer's recommended procedures are available must be followed.

K. Affirmative Defense Language

In this final rule, the EPA is updating the affirmative defense provisions for malfunctions that were included in the March 21, 2011, final rule. We have made certain changes to 40 CFR 63.11226 to clarify the circumstances under which a source may assert an affirmative defense. The changes clarify that a source may assert an affirmative defense to a claim for civil penalties for violations of standards that are caused by malfunctions. A source can avail itself of the affirmative defense when there has been a violation of the emission standards due to an event that meets the definition of malfunction under 40 CFR 63.2 and qualifies for assertion of an affirmative defense under 40 CFR 63.11226. In the March 2011 final rule, we used terms such as ''exceedance'' or ''excess emissions'' in 40 CFR 63.11226, which created unnecessary confusion as to when the affirmative defense could be used. In this final rule, we have eliminated those terms and used the word ''violation'' to make clear that the affirmative defense to civil penalties is available only where an event that causes a violation of the emissions standard meets the criteria for the assertion of an affirmative defense under 40 CFR 63.11226.

This final rule requires that to establish the affirmative defense the owner must prove by a preponderance of evidence that repairs were made as expeditiously as possible when a violation occurs. We have re-evaluated the language concerning the use of off-shift and overtime labor, to the extent practicable, to make the repairs and believe that the language is not necessary. Thus, the language has been eliminated from this final rule.

We have also eliminated the 2-day notification requirement that was included in 40 CFR 63.11226(b) of the March 2011 final rule because we expect to receive sufficient notification of malfunction events that result in violations in other required compliance reports as specified under 40 CFR 63.11225. In addition, we have revised the 45-day affirmative defense reporting requirement that was included in 40 CFR 63.11226(b) of the March 2011 final rule. This final rule requires sources to include the report in the first compliance, deviation or excess emission report due after the initial occurrence of the violation, unless the compliance, deviation or excess emission report is due less than 45 days after the violation. In that case, the affirmative defense report may be included in the second compliance, deviation or excess emission report due after the initial occurrence of the violation. Because the affirmative defense report is now included in a subsequent compliance, deviation or excess emission report, there is no longer a need for the 30-day extension for submitting a stand-alone affirmative defense report. Consequently, we are not including that provision in this final rule.

L. Notification, Recordkeeping and Reporting Requirements

The EPA is amending 40 CFR 63.11225(a)(2) to specify that existing affected boilers have until January 20, 2014 to submit their Initial Notification.

The EPA is amending 40 CFR 63.11225(c)(2) to specify that records of fuel use and type are required only for boilers that are subject to numerical emission limits. We are also amending 40 CFR 63.11223(b) to clarify that the type and amount of fuel needs to be included in reports only if the boiler was physically and legally capable of using more than one type of fuel during that time period and that the report should include concentrations of CO and oxygen, measured at high fire or typical operating load, before and after the tune-up of the boiler. Finally, we are specifying that for units sharing a fuel meter, the fuel use by each boiler may be estimated.

The EPA is amending 40 CFR 63.11225(b) to clarify the requirements for submitting a biennial or 5-year report for units that are only subject to tune-up requirements and to specify the information that must be included in the annual, biennial, or 5-year compliance report.

We are amending 40 CFR 63.11225(c)(2) to specify, as applicable, that a copy of the energy assessment, records documenting the days of operation for each boiler that meets the definition of a seasonal boiler, and a copy of the federally enforceable permit for each boiler that meets the definition of a limited-use boiler must be maintained.

We are revising 40 CFR 63.11225(d) to remove the requirement that the most recent 2 years of records be maintained on site and are adding language that allows for computer access or other means of immediate access of records stored in a centralized location.

We are adding a new paragraph 40 CFR 63.11225(g) to require that boilers that switch fuels, make a physical change, or take a permit limit that results in the applicability of a different subcategory within subpart JJJJJJ, a switch out of subpart JJJJJJ, or the applicability of subpart JJJJJJ must provide notification within 30 days of the fuel switch, physical change, or permit limit. 40 CFR 63.11225(g) also specifies what information the notification must include.

M. Title V Permitting Requirements

For the reasons stated in our March 21, 2011, final rule (76 FR 15554) as well as our reconsideration proposal (76 FR 80532, December 23, 2011), the EPA is not making any changes to the title V exemption for area sources. Thus, no area sources subject to subpart JJJJJJ are required to obtain a title V permit as a result of being subject to subpart JJJJJJ.

Facilities that are synthetic area sources for HAP under subpart JJJJJJ may already be covered by a title V permit or may be required to obtain a title V permit in the future for a reason other than subpart JJJJJJ. For example, area source boilers could be major sources of non-HAP pollutants or could be located at sources that are subject to title V. Thus, the title V exemption in subpart JJJJJJ does not affect whether or not these area sources under subpart JJJJJJ are otherwise required to obtain a permit under part 70 or part 71. See 40 CFR 70.3(a) and (b) or 71.3(a) and (b).

N. Definition of Period of Gas Curtailment or Supply Interruption

We are amending the definition of ''period of natural gas curtailment or supply interruption'' in 40 CFR 63.11237 to clarify that a curtailment does not include normal market fluctuations in the price of gas that are not associated with periods of supplier delivery restrictions. We are also amending the definition to indicate that periods of supply interruption that are beyond control of the facility can also include on-site natural gas system emergencies and equipment failures, and that legitimate periods of supply interruption are not limited to off-site circumstances. We are revising the term and the definition so that it includes the curtailment of any gaseous fuel, and is not limited to just natural gas. Finally, we are clarifying that the supply of gaseous fuel is to an ''affected boiler'' rather than ''affected facility'' and that the supply of gaseous fuel is ''restricted or halted'' for reasons beyond the control of the facility. The definition is amended to read as follows:

Period of gas curtailment or supply interruption means a period of time during which the supply of gaseous fuel to an affected boiler is restricted or halted for reasons beyond the control of the facility. The act of entering into a contractual agreement with a supplier of natural gas established for curtailment purposes does not constitute a reason that is under the control of a facility for the purposes of this definition. An increase in the cost or unit price of natural gas due to normal market fluctuations not during periods of supplier delivery restriction does not constitute a period of natural gas curtailment or supply interruption. On-site gaseous fuel system emergencies or equipment failures qualify as periods of supply interruption when the emergency or failure is beyond the control of the facility.

O. Miscellaneous Technical Corrections

In addition to the above summary of the EPA's final action regarding provisions identified for reconsideration and on other discrete matters identified in response to comments or data received during the comment period, other definitional and regulatory text revisions are being made. These clarifications will help affected sources determine their applicability and better understand the rule requirements. In some instances, definitions and regulatory text have been revised or added to correspond with other related rules, especially the emission standards for industrial, commercial, and institutional boilers at major sources of HAP (40 CFR part 63, subpart DDDDD). Section IV of this preamble includes additional details regarding these miscellaneous technical corrections.

P. Other Issues

40 CFR 63.11196(a)(1) of the March 21, 2011, final rule (76 FR 15554) requires that owners and operators of existing affected boilers subject to the tune-up requirement complete the initial boiler tune-up by March 21, 2012. In addition, 40 CFR 63.11225(a)(4) requires that owners and operators of existing affected boilers subject to the tune-up requirement submit their Notification of Compliance Status no later than 120 days after the applicable compliance date specified in 40 CFR 63.11196. That means that those owners and operators were required to submit their Notification of Compliance Status by July 19, 2012. The Notification must include, among other information, a certification that states ''This facility complies with the requirements in § 63.11214 to conduct an initial tune-up of the boiler.''

On March 13, 2012, the EPA issued a No Action Assurance (NAA) to all owners and/or operators of existing industrial boilers and commercial and institutional boilers at area sources of HAP emissions stating that we would not enforce the requirement to conduct an initial tune-up by March 21, 2012. The NAA was primarily based upon the EPA's concern that sources were reporting a shortage of qualified individuals to prepare boilers for tune-ups and then conduct those tune-ups by the regulatory deadline, as well as upon the uncertainty in the regulated community resulting from the pending reconsideration of the Area Source Boiler Rule. The March 13, 2012, NAA states that it remains in effect until either (1) 11:59 p.m. EDT, October 1, 2012, or (2) the effective date of a final rule addressing the proposed reconsideration of the Area Source Boiler Rule, whichever occurs earlier.

As the July 19, 2012, Notification of Compliance Status deadline approached, a final rule addressing the proposed reconsideration of the Area Source Boiler Rule had not been issued, and thus the NAA continued to remain in effect. Nothing that the EPA learned since the issuance of the original NAA letter led us to question our original concerns about the feasibility of all sources timely completing an initial tune-up. Further, sources that did not complete a tune-up could not certify that they conducted one. Thus, on July 18, 2012, the EPA extended the NAA for sources required to complete an initial tune-up by March 21, 2012, to also include the deadline for submitting the Notification of Compliance Status regarding the initial tune-up. In addition, given that no final rule addressing the proposed reconsideration of the Area Source Boiler Rule had been issued as of July 18, 2012, the pending reconsideration continued to create uncertainty in the regulated community. Thus, the NAA letter also amended the expiration date of the March 13, 2012, NAA, such that the NAA would remain in effect until either (1) 11:59 p.m. EST, December 31, 2012, or (2) the effective date of a final rule addressing the proposed reconsideration of the Area Source Boiler Rule, whichever occurs earlier.

This final rule revises the compliance date for existing affected boilers subject to a tune-up from March 21, 2012, to March 21, 2014. The July 19, 2012, deadline for submitting the Notification of Compliance Status regarding the initial tune-up is reset to July 19, 2014, as a result of revising the compliance date for existing affected boilers subject to a tune-up to March 21, 2014. Owners or operators that had not yet conducted their boiler tune-up, but submitted a Notification of Compliance Status by July 19, 2012, simply to notify the EPA

that the tune-up had not been completed, will need to submit a revised Notification of Compliance Status after their boiler tune-up is conducted.

IV. Summary of Significant Changes Since Proposed Action on Reconsideration

Numerous changes are being made to the March 2011 final rule based on the public comments received. Most of the changes are editorial to clarify applicability and implementation issues raised by the commenters. The public comments received on the proposed changes and the responses to them can be viewed in the memorandum ''*Summary of Public Comments and Responses for: National Emission Standards for Hazardous Air Pollutants for Area Sources: Industrial, Commercial, and Institutional Boilers*'' located in the docket.

A. Applicability

Since proposal, changes to the applicability of this final rule have been made.

1. Dual-Fuel Fired Boilers

The March 2011 final rule includes as a new affected source a boiler that commences fuel switching from natural gas to solid fossil fuel, biomass, or liquid fuel after June 4, 2010. For example, under the March 2011 final rule, if an unaffected gas-fired boiler currently burns oil as allowed under the definition of gas-fired boiler, but after June 4, 2010 burns oil for reasons not allowed under the definition of gas-fired, these boilers would become new affected oil-fired units. The December 2011 reconsideration action did not propose any revisions to the provisions regarding boilers that fuel switch after June 4, 2010. However, the EPA has been made aware through public comments that many dual-fuel fired units presently burn primarily natural gas with limited or no amounts of oil, and that these units may want to burn oil in the future for reasons not allowed under subpart JJJJJJ's definition of gas-fired (*e.g.* cost). Under the March 2011 final rule, such an existing dual-fuel gas-fired boiler that wanted to avoid being subject to the new source requirements would notify as an existing oil-fired unit and be subject to the requirements for existing oil-fired boilers.

We received public comments regarding rule applicability and compliance requirements for these existing dual-fuel fired boilers. One commenter asserted that regardless of the fuel capability identified in an initial notification, the distinction between a new source and an existing source should only be made based upon a source's capability to burn a particular fuel as of the effective date of the rule. The commenter explained that many facilities have boilers that can burn either gas or liquid and, because the price of gas is currently lower than the price of most liquid fuels, they likely are currently firing gas during normal operation, with liquid being fired only during periods of curtailment. The commenter pointed out that, in the future, the price of liquid fuel may be lower than the price of gaseous fuel, and facilities may want to preferentially burn liquid fuel over gas fuel. The commenter asserted that a change in the fuel from the initial notification should not, in and of itself, reclassify a source as a new source for purposes of subpart JJJJJJ. Further, the commenter asserted that their interpretation is comparable to the fuel switching provisions in the EPA's NSPS and PSD regulations. The same commenter asserted that if a source already has oil or alternate fuel capability, then that source would not be commencing construction or making a change to the source. The commenter explained that many of these facilities with boilers capable of burning fuel oil as a back-up for natural gas may not have submitted an initial notification since gaseous fuel-fired boilers that only burn liquid during periods of curtailment are not covered by the Area Source Boiler Rule. The commenter maintained the EPA's guidance, that a dual-fuel fired boiler that fails to file an initial notification and then plans to burn oil in the future would be considered to be a new source, appears to be contrary to regulatory text stating that an affected source is a new source if construction or reconstruction of the affected source is commenced after June 4, 2010 and the applicability criteria are met at the time construction is commenced. The commenter suggested that the EPA clarify that to become a new source, the source must be altered to be capable of accommodating a new fuel, so that new sources are not created simply by failing to submit an initial notification or a notice of fuel switching for a unit that is already capable of accommodating that fuel. Another commenter explained that owners and operators of dual-fuel fired boilers anticipate firing natural gas for many years to come, or until gas supply is temporarily curtailed outside of their control or until such a time when fuel oil becomes more cost effective to burn than gas. The commenter asserted that, based on common sense and increased flexibility, these dual-fuel fired boilers normally burning gas could not be considered subject to any oil-fired requirements as long as they continue to fire only gas, except under the regulation's stated exemptions for burning oil.

In addition to carefully considering the public comments received regarding dual-fuel fired boilers, the EPA reconsidered its overall intent with regard to existing dual-fuel fired boilers that fuel switch after June 4, 2010. Consequently, in this final rule, we are revising the provisions regarding existing boilers that fuel switch after June 4, 2010. This final rule amends 40 CFR 63.11194 to specify that an existing dual-fuel fired boiler (*i.e.,* commenced construction or reconstruction on or before June 4, 2010) meeting the definition of gas-fired boiler, as defined in 40 CFR 63.11237, that meets the applicability requirements of subpart JJJJJJ after June 4, 2010 due to a fuel switch from gaseous fuel to solid fossil fuel, biomass, or liquid fuel is considered to be an existing source under this subpart as long as the boiler was designed to accommodate the alternate fuel. A new or reconstructed dual-fuel fired boiler (*i.e.,* commenced construction or reconstruction after June 4, 2010) meeting the definition of gas-fired boiler, as defined in 40 CFR 63.11237, that meets the applicability criteria of subpart JJJJJJ after June 4, 2010 due to a fuel switch from gaseous fuel to solid fossil fuel, biomass, or liquid fuel is considered to be a new source under this subpart. This revision maintains consistency with the rule's applicability criteria for determining new versus existing sources, eliminates the requirement that existing dual-fuel fired boilers notify as affected sources although, at the time, they are not subject to subpart JJJJJJ, and promotes flexibility in that these existing dual-fuel fired sources that were designed to accommodate an alternate fuel may fire the alternate fuel and move into subpart JJJJJJ without being subject to the more stringent requirements for new boilers.

2. Residential Boilers

One commenter suggested that the definition of ''residential boiler,'' as proposed, be revised to acknowledge the use of combined heat and power systems which function with heat and/or hot water systems. The EPA agrees and is amending the proposed definition to clarify that a boiler that operates as part of a residential combined heat and power system (and that meets other definitional requirements) is a residential boiler. Another commenter explained that

historical buildings may be subdivided into more than four units but boilers serving those units should still be considered residential boilers. We agree and, in this final rule, are amending the proposed definition to clarify that a boiler serving a single unit residence dwelling that has since been converted or subdivided into condominiums or apartments may also be considered a residential boiler.

3. Temporary Boilers

One commenter supported the EPA's 12-month threshold above which the boiler would no longer be considered temporary but pointed out that a boiler used on a temporary basis during construction of a commercial building may be needed for more than 12 months due to the length of the construction period. The commenter suggested that the definition of temporary boiler, as proposed, be revised to allow owners or operators to petition for an extension beyond 12 months. We agree with the commenter and, in this final rule, are amending the proposed definition to allow an owner or operator to submit to their regulatory agency a petition for an extension beyond 12 months. Another commenter suggested that the EPA expand on the intent of ''location'' in the definition of ''temporary boiler.'' We are amending the proposed definition to clarify that ''location'' means ''location within the facility.'' This clarification will allow a boiler to be moved from one location to another within a facility and be considered a different temporary boiler (*i.e.,* a new time period begins) as long as the boiler does not continue to perform the same or similar function and to serve the same electricity, steam, and/or hot water system. Another commenter pointed out that our definition, as proposed, does not specify a time period associated with the statement ''Any temporary boiler that replaces a temporary boiler at a location within the facility and performs the same or similar function will be included in calculating the consecutive time period.'' The commenter explained that it is not unusual for a temporary boiler to be used for short periods during turnarounds or other maintenance activities that recur several years apart. Under the proposal, these boilers would not be considered temporary because each boiler replaces the previous one and performs the same function, even though there is a multi-year gap between the occurrences. The commenter suggested that replacements that occur after a gap of at least one year should not be considered consecutive for the purposes of the definition. We agree with the commenter and are amending numbered paragraph (2) in the proposed definition of ''temporary boiler'' such that it specifies that ''Any temporary boiler that replaces a temporary boiler at a location within the facility and performs the same or similar function will be included in calculating the consecutive time period *unless there is a gap in operation of 12 months or more.''.*

4. Seasonal Boilers

Several commenters explained that boilers subject to semi-annual testing requirements would not meet the proposed 7 consecutive month shutdown criteria, but otherwise would be considered seasonal boilers. Commenters suggested that seasonal boiler be defined to allow periodic testing during the 7-month shutdown period. We agree with the commenters and, in this final rule, are revising the proposed definition of seasonal boiler to allow for a combined total of 15 days of use during the shutdown period for periodic testing.

Another commenter pointed out that the EPA's seasonal boiler definition, as proposed, would potentially allow more regular use. The commenter specifically suggested that the proposed definition be revised to clarify that there must be a 7 consecutive month shutdown every 12 months. It was the EPA's intent that the shutdown period of at least 7 consecutive months be on a 12-month basis. In response to this comment, we are clarifying in the definition of seasonal boiler that the shutdown must be for a period of at least 7 consecutive months (or 210 consecutive days) each 12-month period.

5. Limited-Use Boilers

Several commenters asserted that the EPA should also include a limited-use subcategory in the area source rule for the same reasons we determined a seasonal boiler subcategory was appropriate. Commenters suggested that we should apply the same 5-year tune-up cycle for limited-use units such as auxiliary boilers that we proposed for seasonally-operated units and small oil-fired units. Commenters explained that in the electric utility industry, auxiliary boilers are typically used to generate the steam necessary to bring a main EGU on line during startup and, since auxiliary boilers are primarily operated during unit startup, operation for many of these boilers is typically very limited and sporadic. Commenters also pointed out that the Major Source Boiler Rule includes a limited-use subcategory.

The EPA has determined that a limited-use subcategory is appropriate and is including a limited-use subcategory in this final Area Source Boiler Rule. Specifically, a limited-use boiler is defined in this final rule to mean any boiler that burns any amount of solid or liquid fuels and has a federally enforceable average annual capacity factor of no more than 10 percent. We are using a capacity-factor approach for the same reasons that the approach is being used in the Major Source Boiler Rule. A capacity-factor approach allows operational flexibility for units that operate on standby mode or low loads for periods longer than would be allowed under an approach that limited hours of operation (*e.g.,* the 876 hours per year included in the proposed limited-use definition for major source boilers). The operational flexibility associated with a capacity-factor approach can be achieved without increasing emissions or harm to human health and the environment. Units operating at 10 percent load for 8,760 hours per year would emit the same amount of emissions as units operating at full load for 876 hours per year. Further, it is technically infeasible to test these limited-use boilers since these units serve as back-up energy sources and their operating schedules can be intermittent and unpredictable.

This final rule specifies that limited-use boilers are required to complete a tune-up every 5 years. Boilers that operate no more than 10 percent of the year (*i.e.,* a limited-use boiler) would operate for no more than 6 months in between tune-ups on a 5-year tune-up cycle. The brief period of operations is even less than the number of operating months that seasonal boilers and full-time boilers will operate between tune-ups. The irregular schedule of operations also makes it difficult to schedule more frequent tune-ups. We believe that establishing a limited-use subcategory is reasonable.

6. Alternative PM Emission Control for Certain Oil-Fired Boilers

The EPA received a number of comments urging that we provide an exemption from the PM limit for units burning low-sulfur liquid fuel as is provided in subpart Dc of 40 CFR part 60 (standards of performance for new small industrial-commercial-institutional steam generating units). Commenters asserted that such an exemption is justified since the low sulfur content indicates low PM emissions and that boilers firing low-sulfur liquid fuel should only be subject to a requirement to maintain records documenting the liquid fuel fired. We agree burning low-sulfur liquid fuel can be an alternative method of meeting GACT for PM. We are amending 40 CFR

63.11210 to specify that new or reconstructed oil-fired boilers that combust only oil that contains no more than 0.50 weight percent sulfur or a mixture of 0.50 weight percent sulfur oil with other fuels not subject to a PM emission limit under this subpart and that do not use a post-combustion technology (except a wet scrubber) to reduce PM or sulfur dioxide emissions meet GACT for PM providing the type of fuel combusted is monitored and recorded on a monthly basis. Further, we are specifying that if you intend to burn a new type of fuel or fuel mixture that does not meet the requirements of this paragraph, you must conduct a performance test within 60 days of burning the new fuel.

B. Tune-Up Requirements

1. Boilers With Oxygen Trim Systems

In this final rule, the EPA is adding to the types of boilers that must conduct a tune-up every 5 years boilers that have an oxygen trim system that maintain an optimum air-to-fuel ratio that would otherwise be subject to biennial tune-ups. These units do not need to be tuned as frequently as other types of boilers because the trim system is designed to maintain an optimum air-to-fuel ratio which is the purpose of a tune-up.

2. Initial Compliance for Existing Boilers

The EPA is revising the initial compliance date for existing boilers subject to the work practice or management practice standard of a tune-up. Under the proposed rule, owners and operators of existing affected boilers would have had to comply with the final rule by March 21, 2013. We solicited comments on whether to extend the compliance date to March 21, 2014. We received no comments objecting to either of these dates. Support for an extension until 2014 came from a variety of stakeholders affected by the rule. Therefore, this final rule requires that if you own or operate an existing boiler subject to a work practice or management practice standard of a tune-up, you must comply with the final rule no later than March 21, 2014.

3. Compliance Demonstration

We solicited comment on the requirements for demonstrating compliance with the work practice and management practice tune-up standards, with one focus on clarifying how to measure CO. Commenters requested that we clarify that CO measurements may be taken with a portable CO analyzer. We agree that this clarification is appropriate and are including this clarification in this final rule.

C. Energy Assessment

The EPA received a number of comments regarding the energy assessment requirements and in this final rule is making a series of changes to the energy assessment provisions and related definitions that clarify terms used and better set the scope of the assessment.

In this final rule, we are revising the definition of energy assessment by providing a duration for performing the energy assessment for numbered paragraph (3) in the definition of ''energy assessment'' in 40 CFR 63.11237 for facilities with units with greater than 1 TBtu/yr heat input capacity to specify time duration/size ratio and are including a cap to the maximum number of on-site technical hours that should be used in the energy assessment. The energy assessment for facilities with affected boilers and process heaters with greater than 1.0 TBtu/yr heat input capacity will be up to 24 on-site technical labor hours in length for the first TBtu/yr plus 8 technical labor hours for every additional 1.0 TBtu/yr not to exceed 160 technical hours, but may be longer at the discretion of the owner or operator.

The revised definition of energy assessment also clarifies our intentions that the scope of assessment is based on energy use by discrete segments of a facility, which could vary significantly depending on the site and its complexity, and not by a total aggregation of all individual energy using elements of a facility. We are adding the following language, as paragraph (4), to the ''energy assessment'' definition to help resolve current problems and allow for more streamlined assessments:

''(4) The on-site energy use systems serving as the basis for the percent of affected boiler(s) energy output in paragraphs (1), (2), and (3) of this definition may be segmented by production area or energy use area as most logical and applicable to the specific facility being assessed (*e.g.,* product X manufacturing area; product Y drying area; Building Z).''

In this final rule, we are revising 40 CFR 63.11201 and Table 2 to subpart JJJJJJ to allow a source that is operating under an energy management program established through energy management systems compatible with ISO 50001, that includes the affected boilers, by March 21, 2014, to satisfy the energy assessment requirement. In addition, we are clarifying that energy assessor approval and qualification requirements are waived in instances where an energy assessment completed on or after January 1, 2008 meets or is amended to meet the energy assessment requirements in this final rule by March 21.

The definition of ''boiler system'' is being revised in this final rule to clarify that it means the boiler and associated components directly connected to and serving the energy use systems.

The definition of ''energy use system'' is also being revised in this final rule to clarify that energy use systems are only those on-site systems using energy clearly produced by affected boilers.

D. Clarification of Oxygen Concentration Operating Limits

We are clarifying in this final rule that operating limits for oxygen concentration must be at or above the minimum established during a performance stack test. We are also clarifying that these limits are applicable when the unit is firing the fuel or fuel mixture utilized during the CO performance test.

E. Definitions Regarding Averaging Times

The EPA received comments requesting that we clarify that periods of startup and shutdown are excluded from calculation of the arithmetic mean in the definitions of ''30-day rolling average'' and ''daily block average.'' We agree with the commenters and, in this final rule, are revising the definitions accordingly.

F. Fuel Sampling Frequency

The EPA is amending the fuel sampling requirements in 40 CFR 63.11220(c) because we realized that when performance stack testing requirements were revised in the March 2011 final rule we neglected to revise the fuel analysis requirements. In this final rule, we are specifying that the owner or operator does not need to conduct further fuel analysis sampling if, when demonstrating initial compliance with the Hg emission limit, the Hg constituents in the fuel or fuel mixture are measured to be equal to or less than half of the Hg emission limit. If, when demonstrating initial compliance, the Hg constituents in the fuel or fuel mixture are greater than half of the Hg emission limit, the owner or operator must conduct quarterly sampling.

G. Performance Testing Frequency

The EPA is amending the PM performance testing requirements in 40 CFR 63.11220(b) to specify that the

owner or operator of an affected boiler does not need to conduct further PM emission testing if, when demonstrating initial compliance with the PM emission limit, the performance test results show that the PM emissions are equal to or less than half of the PM emission limit. The owner or operator must continue to comply with all applicable operating limits and monitoring requirements. If the initial performance test results show that the PM emissions are greater than half of the PM emission limit, the owner or operator must conduct subsequent performance tests as specified in 40 CFR 63.11220(a).

With respect to the reconsideration issue regarding the GACT-based PM standards for new oil-fired boilers, we received comments asserting that the most effective control strategy for small oil-fired boilers is the tune-up required by the standards and that establishing a PM limit for those boilers between 10 MMBtu/hr and 30 MMBtu/hr just ensures that those boilers will do stack testing demonstrating that the boilers are in compliance without the need for controls; a fact already known. Commenters also asserted that establishing a PM limit imposes a stack test obligation on small facilities with the least resources to deal with the testing.

We have reviewed the comments and are not eliminating or revising the PM limit for new oil-fired boilers with heat input capacity between 10 MMBtu/hr and 30 MMBtu/hr. We do however, believe that adjustments to the PM performance test frequency as described above are appropriate for boilers that demonstrate during their initial performance test that their PM emissions are equal to or less than half of the PM limit. We believe that the performance test adjustment should not be potentially applicable to only new oil-fired boilers with heat input capacity between 10 MMBtu/hr and 30 MMBtu/hr, but to all new boilers. Owners or operators of boilers whose initial performance test results show that their PM emissions are equal to or less than half of the PM emission limit and, thus, do not need to conduct further PM emissions testing, must continue to comply with all applicable operating limits and monitoring requirements to ensure that there are no changes in operation of the boiler or air pollution control equipment that could increase emissions. This adjustment in PM performance test frequency will potentially reduce the burden on small entities operating boilers that meet the adjustment criteria.

H. Startup and Shutdown Definitions

A number of commenters indicated that the proposed load specifications (*i.e.,* 25 percent load) within the definitions of ''startup'' and ''shutdown'' were inconsistent with either safe or normal (proper) operation of the various types of boilers encountered within the source category. As the basis for defining periods of startup and shutdown, a number of commenters suggested alternative load specifications based on the specific considerations of their boilers; other commenters suggested the achievement of various steady-state conditions.

We have reviewed these comments and believe adjustments are appropriate in the definitions of ''startup'' and ''shutdown.'' These adjustments are tailored for industrial boilers and are consistent with the definitions of ''startup'' and ''shutdown'' contained in the 40 CFR part 63, subpart A General Provisions. We believe these revised definitions address the comments and are rational based on the fact that industrial boilers function to provide steam or, in the case of cogeneration units, electricity. Therefore, industrial boilers should be considered subject to applicable standards at all times steam of the proper pressure, temperature and flow rate is being provided to a common header system or energy user(s) for use as either process steam or for the cogeneration of electricity. The definitions of ''startup'' and ''shutdown'' have been revised in this final rule as follows:

Startup means either the first-ever firing of fuel in a boiler for the purpose of supplying steam or heat for heating and/or producing electricity, or for any other purpose, or the firing of fuel in a boiler after a shutdown event for any purpose. Startup ends when any of the steam or heat from the boiler is supplied for heating and/or producing electricity, or for any other purpose.

Shutdown means the cessation of operation of a boiler for any purpose. Shutdown begins either when none of the steam or heat from the boiler is supplied for heating and/or producing electricity, or for any other purpose, or at the point of no fuel being fired in the boiler, whichever is earlier. Shutdown ends when there is no steam and no heat being supplied and no fuel being fired in the boiler.

I. Notifications

1. Initial Notification

The EPA has been made aware that there are many affected boilers at area sources that are just becoming aware, or are not yet aware, that they are subject to emission standards. Thus, we are amending 40 CFR 63.11225(a)(2) to allow these sources until January 20, 2014 to submit their Initial Notification.

2. Notification of Fuel Change, Physical Change, or Permit Limit

The notification requirement in 40 CFR 63.11225(g) of the final rule for instances when a change in fuel or a physical change to a boiler results in the applicability of a different subcategory or a change out of subpart JJJJJJ is being revised. Under the proposed reconsideration action, a facility would have been required to provide 30 days prior notice of the date upon which the change was scheduled to occur. Commenters explained that an advanced notification requirement would delay such a change if the owner or operator decided to immediately make a change (*e.g.,* switch to 100 percent natural gas) and could potentially restrict flexibility in manufacturing operations, and suggested that the owner or operator be allowed to make notification within 30 days after the change has occurred. We agree that notification within 30 days after a change that results in applicability of a different subcategory or a change out of subpart JJJJJJ will provide the EPA or state/local agency with the required information within a reasonable timeframe. Thus, in this final rule, we are requiring facilities making these types of changes to provide notification within 30 days following the change. The notification requirement in 40 CFR 63.11225(g) is also being amended to clarify that it includes affected boilers that switch fuels or make a physical change to the boiler and the fuel switch or change results in the applicability of a different subcategory within subpart JJJJJJ, in the boiler becoming subject to subpart JJJJJJ, or in the boiler switching out of subpart JJJJJJ due to a change to 100 percent natural gas, as well as affected boilers that take a permit limit that results in the applicability of subpart JJJJJJ. Commenters requested that we make this clarification and we agree that it is appropriate.

J. Miscellaneous Definitions

In this final rule, we are revising some definitions and adding others to help affected sources determine their applicability. Specifically, definitions have been added for the terms ''10-day rolling average,'' ''30-day rolling average,'' ''Annual heat input,'' ''Biodiesel,'' ''Calendar year,'' ''Common stack,'' ''Daily block average,'' ''Distillate oil,'' ''Electric boiler,'' ''Electric utility steam generating unit (EGU),'' ''Energy management program,'' ''Fluidized bed boiler,'' ''Fluidized bed combustion,'' ''Hourly average,'' ''Limited-use boiler,'' ''Load fraction,''

''Minimum scrubber pressure drop,'' ''Minimum sorbent injection rate,'' ''Minimum total secondary electric power,'' ''Operating day,'' ''Oxygen analyzer system,'' ''Oxygen trim system,'' ''Process heater,'' ''Regulated gas stream,'' ''Residential boiler,'' ''Residual oil,'' ''Seasonal boiler,'' ''Shutdown,'' ''Solid fuel,'' ''Startup,'' ''Temporary boiler,'' ''Tune-up,'' ''Vegetable oil,'' ''Voluntary Consensus Standards (VCS),'' and ''Wet scrubber.''

Definitions revised to clarify the term include ''Bag leak detection system,'' ''Biomass subcategory,'' ''Boiler,'' ''Boiler system,'' ''Deviation,'' ''Dry scrubber,'' ''Electrostatic precipitator (ESP),'' ''Energy assessment,'' ''Energy use system,'' ''Federally enforceable,'' ''Gas-fired boiler,'' ''Heat input,'' ''Hot water heater,'' ''Institutional boiler,'' ''Liquid fuel,'' ''Minimum activated carbon injection rate,'' ''Minimum oxygen level,'' ''Minimum scrubber liquid flow rate,'' ''Natural gas,'' ''Oil subcategory,'' ''Particulate matter,'' ''Period of gas curtailment or supply interruption,'' ''Qualified Energy Assessor,'' and ''Waste heat boiler.''

V. Other Actions the EPA Is Taking

Section 307(d)(7)(B) of the CAA states that ''[o]nly an objection to a rule or procedure which was raised with reasonable specificity during the period for public comment (including any public hearing) may be raised during judicial review. If the person raising an objection can demonstrate to the Administrator that it was impracticable to raise such objection within such time or if the grounds for such objection arose after the period for public comment (but within the time specified for judicial review) and if such objection is of central relevance to the outcome of the rule, the Administrator shall convene a proceeding for reconsideration of the rule and provide the same procedural rights as would have been afforded had the information been available at the time the rule was proposed. If the Administrator refuses to convene such a proceeding, such person may seek review of such refusal in the United States court of appeals for the appropriate circuit (as provided in subsection (b)).''

As to the first procedural criterion for reconsideration, a petitioner must show why the issue could not have been presented during the comment period, either because it was impracticable to raise the issue during that time or because the grounds for the issue arose after the period for public comment (but within 60 days of publication of the final action). The EPA is denying the petitions for reconsideration of five issues because this criterion has not been met. In many cases, the petitions reiterate comments made on the proposed June 2010 rule during the public comment period for that rule. On those issues, the EPA responded to those comments in the March 2011 final rule, and made appropriate revisions to the proposed rule after consideration of public comments received. It is well established that an agency may refine its proposed approach without providing an additional opportunity for public comment. See *Community Nutrition Institute* v. *Block,* 749 F.2d 50, 58 (DC Cir. 1984) and *International Fabricare Institute* v. *EPA,* 972 F.2d 384, 399 (DC Cir. 1992) (notice and comment is not intended to result in ''interminable back-and-forth[,]'' nor is agency required to provide additional opportunity to comment on its response to comments) and *Small Refiner Lead Phase-Down Task Force* v. *EPA,* 705 F.2d 506, 547 (DC Cir. 1983) (''notice requirement should not force an agency endlessly to repropose a rule because of minor changes'')

In the EPA's view, an objection is of central relevance to the outcome of the rule only if it provides substantial support for the argument that the promulgated regulation should be revised. See *Union Oil* v. *EPA,* 821 F.2d 768, 683 (DC Cir. 1987) (court declined to remand rule because petitioners failed to show substantial likelihood that final rule would have been changed based on information in petition). See also the EPA's *Denial of the Petitions to Reconsider the Endangerment and Cause or Contribute Findings for Greenhouse Gases under Section 202 of the Clean Air Act,* 75 FR at 49556, 49561 (August 13, 2010). See also, 75 FR at 49556, 49560–49563 (August 13, 2010) and 76 FR at 4780, 4786—4788 (January 26, 2011) for additional discussion of the standard for reconsideration under CAA section 307(d)(7)(B).

We are denying reconsideration on the following five issues contained in the petitions for reconsideration because they failed to meet the standard described above for reconsideration under CAA section 307(d)(7)(B). Specifically, on these issues, the petitioner has failed to show the following: That it was impracticable to raise their objections during the comment period or that the grounds for their objections arose after the close of the comment period; and/or that their concern is of central relevance to the outcome of the rule. Therefore, the EPA is denying the petitions for reconsideration on the issues for the reasons described below.

Issue: Use of RDL Is Unlawful

The petitioner (Sierra Club) objected to the EPA establishing a MACT floor emission limit at a level equal to three times the RDL as being unlawful and arbitrary. This issue is not of central relevance to the outcome of this final rule. The final emission limits in this rule are based on the UPL at a confidence interval of 99 percent. The RDL analysis was not used in this final rule.

Issue: MACT Floor for Existing Sources Must Reflect Average Performance of the Top 12 Percent of Units

The petitioner (Sierra Club) stated that the MACT floor for existing sources must reflect the average performance of the top 12 percent of units. The petitioner has not demonstrated that it lacked the opportunity to comment on the EPA's MACT floor analysis. The methods used to compute the MACT floors were subject to notice and comment. Rationale and responses to comments on the MACT floor methodology were provided at 75 FR 31904, June 4, 2010; 76 FR 15571, March 21, 2011. Therefore, the EPA is denying the request for reconsideration.

Issue: Consider a De Minimis Size Threshold

The petitioners (American Petroleum Institute, National Petrochemical and Refiners Association, Alaska Oil and Gas Association) requested that the EPA consider a de minimis size threshold using guidelines from insignificance thresholds authorized under CAA part 71. The EPA is denying the request for reconsideration on this issue. In the June 2010 proposed rule, it was readily apparent that we were not establishing de minimis size thresholds in the area source rulemaking. We received multiple comments on this issue and responded to them in the response to comments document for the March 2011 final rule. The issue on which petitioners seek reconsideration was one that could have been raised during the comment period and thus does not meet the requirements for reconsideration. Therefore, the EPA is denying this request for reconsideration.

Issue: MACT Standards Must Be Set for All HAP

The petitioner (Sierra Club) asserted that MACT standards must be set for all HAP including HAP not listed in CAA section 112(c)(6). The EPA is denying the request for reconsideration on this issue. We disagree with the petitioner that the EPA must issue emission standards for all HAP. MACT standards have been set for Hg and CO, as a

surrogate for POM emissions, but the EPA does not interpret CAA section 112(c)(6) to compel regulation of all HAP emitted by area sources. The EPA's position on this issue was clear in the proposed rule (75 FR 31900, 31904, 31918). This commenter raised this issue in its comments (76 FR 15567, March 21, 2011). Not only did the petitioner have an opportunity to present its theory in its comments, but also it did so.

Issue: CO Is Not a Valid Surrogate for POM

The petitioner (Sierra Club) requested that the EPA remove the CO standard as a surrogate for POM and instead adopt a numeric limit for POM because CO is not an appropriate surrogate. The EPA is denying the request for reconsideration on this issue. While the EPA disagrees with the petitioner's argument regarding the suitability of CO as a surrogate for POM, the petitioner has not demonstrated that it lacked the opportunity to comment on this issue. The EPA revised the final CO emission limit to ensure a more accurate correlation between POM and CO levels. The EPA made its position on this issue clear and explained the agency's basis for concluding that CO was an appropriate surrogate in the proposed rule (75 FR 31900, 31904, June 4, 2010). The petitioner raised this issue in its comments (Document ID: EPA–HQ–OAR–2006–0790–1982, Comments of Earthjustice, Sierra Club, Clean Air Task Force, and Natural Resources Defense Council, p. 4). Therefore, the EPA is denying the request for reconsideration.

VI. Impacts Associated With This Final Rule

The amendments contained in this final action are corrections that are intended to clarify, but not change, the coverage of the final rule. The clarifications and corrections should make it easier for owners and operators and for local and state authorities to understand and implement the requirements. The final amendments will not affect the estimated emission reductions, control costs or the benefits of the rule in substance. The amendments do not impose any additional regulatory requirements beyond those imposed by the previously promulgated boiler area source rule and, in fact, will result in a decrease in the burden on small facilities as a result of the reduction in the frequency of conducting tune-ups for seasonal boilers, limited-use boilers, small (equal to or less than 5 MMBtu/hr) oil-fired boilers and boilers using an oxygen trim system that maintain an optimum air-to-fuel ratio. Additionally, the burden will be reduced on facilities with existing large boilers that currently operate under an energy management program established through energy management systems compatible with ISO 50001, that includes the affected boilers, because a one-time energy assessment will not be required. Burden will also be reduced on facilities with affected boilers that burn low-sulfur oil because, in lieu of needing to meet an emission limit, we consider low-sulfur oil combustion to be GACT for PM for those boilers. This change should allow sources currently complying with 40 CFR 60 subpart Dc to use the same compliance approach rather than needing to monitor limits. Further reduction in burden will occur in instances where initial compliance demonstrations with the Hg emission limit via fuel sampling or with the PM emission limit via performance stack testing show that the emissions are equal to or less than half the respective emission limit because no further sampling or testing of those boilers will be required.

As discussed in section III, the Hg emission limits for new and existing large (10 MMBtu/hr or greater) coal-fired area source boilers were revised because of an error discovered in the analysis conducted for the final rule. This technical correction resulted in an increase in the emission limit for Hg. As explained in the December 2011 proposal, we also revised our impacts analysis to be consistent with emission factor changes made to the Major Source Boiler Rule. The baseline emissions for area sources are calculated using the emission factors developed for the Major Source Boiler Rule because of insufficient data for area sources. Emission factor changes resulted in a higher baseline emission for Hg from coal-fired area source boilers. Consequently, the result of the increase in both baseline Hg emissions and Hg emission limits is that the overall reduction in Hg emissions does not change significantly from the estimated reduction for the promulgated rule.

In summary, as compared to the control costs estimated for the March 2011 final rule, this final rule will not result in any meaningful change in the capital and annual cost due to the increase in emission limits and the decrease in burden on small facilities.

VII. Statutory and Executive Order Reviews

A. Executive Order 12866: Regulatory Planning and Review and Executive Order 13563: Improving Regulation and Regulatory Review

Under section 3(f)(1) of Executive Order 12866 (58 FR 51735, October 4, 1993), this action is a ''significant regulatory action'' because it is likely to raise novel legal or policy issues. Accordingly, the EPA submitted this action to the OMB for review under Executive Order 12866 and Executive Order 13563 (76 FR 3821, January 21, 2011), and any changes made in response to OMB recommendations have been documented in the docket for this action.

B. Paperwork Reduction Act

This action does not impose an information collection burden. This action results in no significant changes to the information collection requirements of the promulgated rule and will have no increased impact on the information collection estimate of projected cost and hour burden made and approved by OMB. In fact, the reduction in tune-up frequency for some boilers will result in less information collection burden. Therefore, the information collection request has not been revised. However, the OMB has previously approved the information collection requirements contained in the existing regulation (40 CFR part 63, subpart JJJJJJ) under the provisions of the *Paperwork Reduction Act,* 44 U.S.C. 3501, *et seq.* and has assigned OMB control number 2060–0668. The OMB control numbers for the EPA's regulations in 40 CFR are listed in 40 CFR part 9.

C. Regulatory Flexibility Act

The RFA generally requires an agency to prepare a regulatory flexibility analysis of any rule subject to notice and comment rulemaking requirements under the Administrative Procedure Act or any other statute unless the agency certifies that the rule will not have a significant economic impact on a substantial number of small entities.[2]

[2] Small entities include small businesses, small organizations, and small governmental jurisdictions. For purposes of assessing the impacts of this final rule on small entities, small entity is defined as: (1) A small business as defined by the Small Business Administration size standards for small businesses at 13 CFR 121.201 (less than 500, 750, or 1,000 employees, depending on the specific NAICS Code under subcategory 325); (2) a small governmental jurisdiction that is a government of a city, county, town, school district or special district with a population of less than 50,000; and (3) a

Continued

The RFA also allows an agency to ''consider a series of closely related rules as one rule for the purposes of sections'' 603 (initial regulatory flexibility analysis) and 604 (final regulatory flexibility analysis) in order to avoid ''duplicative action.'' 5 U.S.C. section 605(c). These amendments and notice of final action on reconsideration are closely related to the final Area Source Boiler Rule, which the EPA signed on February 21, 2011, and that took effect on May 20, 2011. The EPA prepared a final regulatory flexibility analysis in connection with the final Area Source Boiler Rule. Therefore, pursuant to section 605(c), the EPA is not required to complete a final regulatory flexibility analysis for this rule (*i.e.,* the amendments and final action).

The EPA has been concerned with potential small entity impacts since it began developing the Area Source Boiler Rule. The EPA conducted outreach to small entities and, pursuant to section 609 of RFA, convened a Small Business Advocacy Review Panel (the Panel) on January 22, 2009, to obtain advice and recommendations from small entity representatives. Pursuant to the RFA, the EPA used the Panel's report and prepared both an initial regulatory flexibility analysis and a final regulatory flexibility analysis in connection with the closely related final Area Source Boiler Rule. Convening an additional Panel and preparing an additional final regulatory flexibility analysis would be procedurally duplicative and is unnecessary given that the issues here are within the scope of those considered by the Panel. Finally, we note that this action, which amends the Area Source Boiler Rule, will not impose any additional regulatory requirements beyond those imposed by the previously promulgated Area Source Boiler Rule and, in fact, the amendments will afford relief to some boilers.

D. Unfunded Mandates Reform Act

This action contains no new federal mandates under the provisions of Title II of the UMRA of 1995, 2 U.S.C. 1531–1538 for state, local, or tribal governments or the private sector. This action imposes no new enforceable duty on any state, local, or tribal governments or the private sector. Therefore, this action is not subject to the requirements of sections 202 and 205 of the UMRA.

This action is also not subject to the requirements of section 203 of UMRA because it contains no regulatory requirements that might significantly or uniquely affect small governments. This rule finalizes amendments to aid with compliance.

E. Executive Order 13132: Federalism

This action does not have federalism implications. It will not have substantial direct effects on the states, on the relationship between the national government and the states, or on the distribution of power and responsibilities among the various levels of government, as specified in Executive Order 13132. This final rule will not impose new direct compliance costs on state or local governments, and will not preempt state law. Thus, Executive Order 13132 does not apply to this action.

F. Executive Order 13175: Consultation and Coordination With Indian Tribal Governments

This action does not have tribal implications, as specified in Executive Order 13175 (65 FR 67249, November 9, 2000). It will not have substantial new direct effects on tribal governments, on the relationship between the federal government and Indian tribes, or on the distribution of power and responsibilities between the federal government and Indian tribes, as specified in Executive Order 13175. Thus, Executive Order 13175 does not apply to this action.

G. Executive Order 13045: Protection of Children From Environmental Health Risks and Safety Risks

The EPA interprets Executive Order 13045 (62 FR 19885, April 23, 1997) as applying to those regulatory actions that concern health or safety risks, such that the analysis required under section 5–501 of the Order has the potential to influence the regulation. This action is not subject to Executive Order 13045 because it is based solely on technology performance.

H. Executive Order 13211: Actions Concerning Regulations That Significantly Affect Energy Supply, Distribution, or Use

This action is not a ''significant energy action'' as defined in Executive Order 13211 (66 FR 28355, May 22, 2001), because it is not likely to have a significant adverse effect on the supply, distribution, or use of energy. We estimate no significant changes for the energy sector for price, production, or imports.

I. National Technology Transfer and Advancement Act

Section 12(d) of the NTTAA of 1995, Public Law No. 104–113, 12(d) (15 U.S.C. 272 note) directs the EPA to use VCS in its regulatory activities, unless to do so would be inconsistent with applicable law or otherwise impractical. VCS are technical standards (*e.g.,* materials specifications, test methods, sampling procedures, and business practices) that are developed or adopted by VCS bodies. NTTAA directs the EPA to provide Congress, through OMB, explanations when the agency decides not use available and applicable VCS.

This action does not involve any new technical standards. Therefore, the EPA did not consider the use of any VCS.

J. Executive Order 12898: Federal Actions To Address Environmental Justice in Minority Populations and Low-Income Populations

Executive Order 12898 (59 FR 7629, February 16, 1994) establishes federal executive policy on environmental justice. Its main provision directs federal agencies, to the greatest extent practicable and permitted by law, to make environmental justice part of their mission by identifying and addressing, as appropriate, disproportionately high and adverse human health or environmental effects of their programs, policies, and activities on minority populations and low-income populations in the United States.

The EPA has determined that this final rule will not have disproportionately high and adverse human health or environmental effects on minority or low-income populations because the level of protection provided to human health or the environment through the rule's requirements does not vary. Therefore, it does not have any disproportionately high or adverse human health or environmental effects on any population, including any minority or low-income population.

K. Congressional Review Act

The Congressional Review Act, 5 U.S.C. 801 *et seq.,* as added by the Small Business Regulatory Enforcement Fairness Act of 1996, generally provides that before a rule may take effect, the agency promulgating the rule must submit a rule report, which includes a copy of the rule, to each House of the Congress and to the Comptroller General of the United States. The EPA will submit a report containing this rule and other required information to the U.S. Senate, the U.S. House of Representatives, and the Comptroller General of the United States prior to

small organization that is any not-for-profit enterprise that is independently owned and operated and is not dominant in its field.

publication of the rule in the **Federal Register**. A Major rule cannot take effect until 60 days after it is published in the **Federal Register**. This action is a reconsideration of a previous action that was a major rule under the CRA. However, today's action makes only certain limited revisions to the March 2011 rule and those revisions do not qualify as a major rule under the CRA. Therefore, this action is not a ''major rule'' as defined by 5 U.S.C. 804(2). This rule will be effective February 1, 2013.

List of Subjects in 40 CFR Part 63

Environmental protection, Administrative practice and procedure, Air pollution control, Hazardous substances, Incorporation by reference.

Dated: December 20, 2012.

Lisa P. Jackson,

Administrator.

For the reasons stated in the preamble, title 40, chapter I, part 63 of the Code of Federal Regulations is amended as follows:

PART 63—[AMENDED]

■ 1. The authority citation for part 63 continues to read as follows:

Authority: 42 U.S.C. 7401 et seq.

Subpart A—[Amended]

■ 2. Section 63.14 is amended by:

■ a. Revising paragraphs (b)(19), (b)(23), (b)(35), (b)(40), (b)(69), and (b)(70).

■ b. Removing and reserving paragraph (b)(53).

■ c. Adding paragraphs (b)(46), (b)(55), and (b)(76) through (83).

■ d. Adding paragraphs (p)(12) through (20).

■ e. Adding paragraph (r).

The revisions and additions read as follows:

§ 63.14 Incorporations by reference.

* * * * *

(b) * * *

(19) ASTM D95–05 (Reapproved 2010), Standard Test Method for Water in Petroleum Products and Bituminous Materials by Distillation, approved May 1, 2010, IBR approved for § 63.10005(i) and table 6 to subpart DDDDD.

* * * * *

(23) ASTM D4006–11, Standard Test Method for Water in Crude Oil by Distillation, including Annex A1 and Appendix X1, approved June 1, 2011, IBR approved for § 63.10005(i) and table 6 to subpart DDDDD.

* * * * *

(35) ASTM D6784–02 (Reapproved 2008) Standard Test Method for Elemental, Oxidized, Particle-Bound and Total Mercury in Flue Gas Generated from Coal-Fired Stationary Sources (Ontario Hydro Method), approved April 1, 2008, IBR approved for table 1 to subpart DDDDD of this part, table 2 to subpart DDDDD of this part, table 5 to subpart DDDDD, table 11 to subpart DDDDD of this part, table 12 to subpart DDDDD of this part, table 13 to subpart DDDDD of this part, and table 4 to subpart JJJJJJ of this part.

* * * * *

(40) ASTM D396–10 Standard Specification for Fuel Oils, approved October 1, 2010, IBR approved for § 63.7575 and § 6311237.

* * * * *

(46) ASTM D4606–03(2007), Standard Test Method for Determination of Arsenic and Selenium in Coal by the Hydride Generation/Atomic Absorption Method, approved October 1, 2007, IBR approved for table 6 to subpart DDDDD.

* * * * *

(55) ASTM D6357–11, Test Methods for Determination of Trace Elements in Coal, Coke, and Combustion Residues from Coal Utilization Processes by Inductively Coupled Plasma Atomic Emission Spectrometry, approved April 1, 2011, IBR approved for table 6 to subpart DDDDD.

* * * * *

(69) ASTM D4057–06 (Reapproved 2011), Standard Practice for Manual Sampling of Petroleum and Petroleum Products, including Annex A1, approved June 1, 2011, IBR approved for § 63.10005(i) and table 6 to subpart DDDDD.

(70) ASTM D4177–95 (Reapproved 2010), Standard Practice for Automatic Sampling of Petroleum and Petroleum Products, including Annexes A1 through A6 and Appendices X1 and X2, approved May 1, 2010, IBR approved for § 63.10005(i) and table 6 to subpart DDDDD.

* * * * *

(76) ASTM D6751–11b, Standard Specification for Biodiesel Fuel Blend Stock (B100) for Middle Distillate Fuels, approved July 15, 2011, IBR approved for § 63.7575 and § 63.11237.

(77) ASTM D975–11b, Standard Specification for Diesel Fuel Oils, approved December 1, 2011, IBR approved for § 63.7575.

(78) ASTM D5864–11 Standard Test Method for Determining Aerobic Aquatic Biodegradation of Lubricants or Their Components, approved March 1, 2011, IBR approved for table 6 to subpart DDDDD.

(79) ASTM D240–09 Standard Test Method for Heat of Combustion of Liquid Hydrocarbon Fuels by Bomb Calorimeter, approved July 1, 2009, IBR approved for table 6 to subpart DDDDD.

(80) ASTM D4208–02(2007) Standard Test Method for Total Chlorine in Coal by the Oxygen Bomb Combustion/Ion Selective Electrode Method, approved May 1, 2007, IBR approved for table 6 to subpart DDDDD.

(81) ASTM D5192–09 Standard Practice for Collection of Coal Samples from Core, approved June 1, 2009, IBR approved for table 6 to subpart DDDDD.

(82) ASTM D7430–11ae1, Standard Practice for Mechanical Sampling of Coal, approved October 1, 2011, IBR approved for table 6 to subpart DDDDD.

(83) ASTM D6883–04, Standard Practice for Manual Sampling of Stationary Coal from Railroad Cars, Barges, Trucks, or Stockpiles, approved June 1, 2004, IBR approved for table 6 to subpart DDDDD.

* * * * *

(p) * * *

(12) Method 5050 (SW–846–5050), Bomb Preparation Method for Solid Waste, Revision 0, September 1994, in EPA Publication No. SW–846, Test Methods for Evaluating Solid Waste, Physical/Chemical Methods, Third Edition IBR approved for table 6 to subpart DDDDD.

(13) Method 9056 (SW–846–9056), Determination of Inorganic Anions by Ion Chromatography, Revision 1, February 2007, in EPA Publication No. SW–846, Test Methods for Evaluating Solid Waste, Physical/Chemical Methods, Third Edition, IBR approved for table 6 to subpart DDDDD.

(14) Method 9076 (SW–846–9076), Test Method for Total Chlorine in New and Used Petroleum Products by Oxidative Combustion and Microcoulometry, Revision 0, September 1994, in EPA Publication No. SW–846, Test Methods for Evaluating Solid Waste, Physical/Chemical Methods, Third Edition, IBR approved for table 6 to subpart DDDDD.

(15) Method 1631 Revision E, Mercury in Water by Oxidation, Purge and Trap, and Cold Vapor Atomic Absorption Fluorescence Spectrometry, Revision E, EPA–821–R–02–019, August 2002, IBR approved for table 6 to subpart DDDDD.

(16) Method 200.8, Determination of Trace Elements in Waters and Wastes by Inductively Coupled Plasma—Mass Spectrometry, Revision 5.4, 1994, IBR approved for table 6 to subpart DDDDD.

(17) Method 6020A (SW–846–6020A), Inductively Coupled Plasma-Mass Spectrometry, Revision 1, February 2007, in EPA Publication No. SW–846, Test Methods for Evaluating Solid Waste, Physical/Chemical Methods,

Third Edition, IBR approved for table 6 to subpart DDDDD.

(18) Method 6010C (SW–846–6010C), Inductively Coupled Plasma-Atomic Emission Spectrometry, Revision 3, February 2007, in EPA Publication No. SW–846, Test Methods for Evaluating Solid Waste, Physical/Chemical Methods, Third Edition, IBR approved for table 6 to subpart DDDDD.

(19) Method 7060A (SW–846–7060A), Arsenic (Atomic Absorption, Furnace Technique), Revision 1, September 1994, in EPA Publication No. SW–846, Test Methods for Evaluating Solid Waste, Physical/Chemical Methods, Third Edition, IBR approved for table 6 to subpart DDDDD.

(20) Method 7740 (SW–846–7740), Selenium (Atomic Absorption, Furnace Technique), Revision 0, September 1986, in EPA Publication No. SW–846, Test Methods for Evaluating Solid Waste, Physical/Chemical Methods, Third Edition, IBR approved for table 6 to subpart DDDDD.

* * * * *

(r) The following material is available for purchase from the Technical Association of the Pulp and Paper Industry (TAPPI), 15 Technology Parkway South, Norcross, GA 30092, (800) 332–8686, *http://www.tappi.org*.

(1) TAPPI T 266, Determination of Sodium, Calcium, Copper, Iron, and Manganese in Pulp and Paper by Atomic Absorption Spectroscopy (Reaffirmation of T 266 om-02), Draft No. 2, July 2006, IBR approved for table 6 to subpart DDDDD.

(2) [Reserved]

Subpart JJJJJJ—[AMENDED]

■ 3. Section 63.11194 is amended by revising paragraphs (a)(1), (c) and (d), by redesignating paragraph (e) as paragraph (f) and by adding new paragraph (e) to read as follows:

§ 63.11194 What is the affected source of this subpart?

(a) * * *

(1) The affected source of this subpart is the collection of all existing industrial, commercial, and institutional boilers within a subcategory, as listed in § 63.11200 and defined in § 63.11237, located at an area source.

* * * * *

(c) An affected source is a new source if you commenced construction of the affected source after June 4, 2010, and the boiler meets the applicability criteria at the time you commence construction.

(d) An affected source is a reconstructed source if the boiler meets the reconstruction criteria as defined in § 63.2, you commenced reconstruction after June 4, 2010, and the boiler meets the applicability criteria at the time you commence reconstruction.

(e) An existing dual-fuel fired boiler meeting the definition of gas-fired boiler, as defined in § 63.11237, that meets the applicability requirements of this subpart after June 4, 2010 due to a fuel switch from gaseous fuel to solid fossil fuel, biomass, or liquid fuel is considered to be an existing source under this subpart as long as the boiler was designed to accommodate the alternate fuel.

* * * * *

■ 4. Section 63.11195 is amended by revising the introductory text and paragraphs (c) and (g) and by adding paragraphs (h) through (k) to read as follows:

§ 63.11195 Are any boilers not subject to this subpart?

The types of boilers listed in paragraphs (a) through (k) of this section are not subject to this subpart and to any requirements in this subpart.

* * * * *

(c) A boiler required to have a permit under section 3005 of the Solid Waste Disposal Act or covered by subpart EEE of this part (e.g., hazardous waste boilers), unless such units do not combust hazardous waste and combust comparable fuels.

* * * * *

(g) Any boiler that is used as a control device to comply with another subpart of this part, or part 60, part 61, or part 65 of this chapter provided that at least 50 percent of the average annual heat input during any 3 consecutive calendar years to the boiler is provided by regulated gas streams that are subject to another standard.

(h) Temporary boilers as defined in this subpart.

(i) Residential boilers as defined in this subpart.

(j) Electric boilers as defined in this subpart.

(k) An electric utility steam generating unit (EGU) covered by subpart UUUUU of this part.

■ 5. Section 63.11196 is amended by revising paragraphs (a)(1) and (d) to read as follows:

§ 63.11196 What are my compliance dates?

(a) * * *

(1) If the existing affected boiler is subject to a work practice or management practice standard of a tune-up, you must achieve compliance with the work practice or management practice standard no later than March 21, 2014.

* * * * *

(d) If you own or operate an industrial, commercial, or institutional boiler and would be subject to this subpart except for the exemption in § 63.11195(b) for commercial and industrial solid waste incineration units covered by 40 CFR part 60, subpart CCCC or subpart DDDD, and you cease combusting solid waste, you must be in compliance with this subpart on the effective date of the waste to fuel switch as specified in § 60.2145(a)(2) and (3) of subpart CCCC or § 60.2710(a)(2) and (3) of subpart DDDD.

■ 6. Section 63.11200 is revised to read as follows:

§ 63.11200 What are the subcategories of boilers?

The subcategories of boilers, as defined in § 63.11237 are:

(a) Coal.

(b) Biomass.

(c) Oil.

(d) Seasonal boilers.

(e) Oil-fired boilers with heat input capacity of equal to or less than 5 million British thermal units (Btu) per hour.

(f) Boilers with an oxygen trim system that maintains an optimum air-to-fuel ratio that would otherwise be subject to a biennial tune-up.

(g) Limited-use boilers.

■ 7. Section 63.11201 is amended by revising paragraphs (b) and (d) to read as follows:

§ 63.11201 What standards must I meet?

* * * * *

(b) You must comply with each work practice standard, emission reduction measure, and management practice specified in Table 2 to this subpart that applies to your boiler. An energy assessment completed on or after January 1, 2008 that meets or is amended to meet the energy assessment requirements in Table 2 to this subpart satisfies the energy assessment requirement. A facility that operates under an energy management program established through energy management systems compatible with ISO 50001, that includes the affected units, also satisfies the energy assessment requirement.

* * * * *

(d) These standards apply at all times the affected boiler is operating, except during periods of startup and shutdown as defined in § 63.11237, during which time you must comply only with Table 2 to this subpart.

■ 8. Section 63.11205 is amended by revising paragraphs (b), (c) introductory

text, (c)(1) introductory text, and (c)(1)(i) to read as follows:

§ 63.11205 What are my general requirements for complying with this subpart?

* * * * *

(b) You must demonstrate compliance with all applicable emission limits using performance stack testing, fuel analysis, or a continuous monitoring system (CMS), including a continuous emission monitoring system (CEMS), a continuous opacity monitoring system (COMS), or a continuous parameter monitoring system (CPMS), where applicable. You may demonstrate compliance with the applicable mercury emission limit using fuel analysis if the emission rate calculated according to § 63.11211(c) is less than the applicable emission limit. Otherwise, you must demonstrate compliance using stack testing.

(c) If you demonstrate compliance with any applicable emission limit through performance stack testing and subsequent compliance with operating limits (including the use of CPMS), with a CEMS, or with a COMS, you must develop a site-specific monitoring plan according to the requirements in paragraphs (c)(1) through (3) of this section for the use of any CEMS, COMS, or CPMS. This requirement also applies to you if you petition the EPA Administrator for alternative monitoring parameters under § 63.8(f).

(1) For each CMS required in this section (including CEMS, COMS, or CPMS), you must develop, and submit to the Administrator for approval upon request, a site-specific monitoring plan that addresses paragraphs (c)(1)(i) through (vi) of this section. You must submit this site-specific monitoring plan, if requested, at least 60 days before your initial performance evaluation of your CMS. This requirement to develop and submit a site-specific monitoring plan does not apply to affected sources with existing CEMS or COMS operated according to the performance specifications under appendix B to part 60 of this chapter and that meet the requirements of § 63.11224.

(i) Installation of the CMS sampling probe or other interface at a measurement location relative to each affected process unit such that the measurement is representative of control of the exhaust emissions (e.g., on or downstream of the last control device);

* * * * *

■ 9. Section 63.11210 is amended by revising paragraphs (b) through (e) and adding paragraphs (f) through (j) to read as follows:

§ 63.11210 What are my initial compliance requirements and by what date must I conduct them?

* * * * *

(b) For existing affected boilers that have applicable emission limits, you must demonstrate initial compliance with the applicable emission limits no later than 180 days after the compliance date that is specified in § 63.11196 and according to the applicable provisions in § 63.7(a)(2), except as provided in paragraph (j) of this section.

(c) For existing affected boilers that have applicable work practice standards, management practices, or emission reduction measures, you must demonstrate initial compliance no later than the compliance date that is specified in § 63.11196 and according to the applicable provisions in § 63.7(a)(2), except as provided in paragraph (j) of this section.

(d) For new or reconstructed affected boilers that have applicable emission limits, you must demonstrate initial compliance with the applicable emission limits no later than 180 days after March 21, 2011 or within 180 days after startup of the source, whichever is later, according to § 63.7(a)(2)(ix).

(e) For new or reconstructed oil-fired boilers that combust only oil that contains no more than 0.50 weight percent sulfur or a mixture of 0.50 weight percent sulfur oil with other fuels not subject to a PM emission limit under this subpart and that do not use a post-combustion technology (except a wet scrubber) to reduce particulate matter (PM) or sulfur dioxide emissions, you are not subject to the PM emission limit in Table 1 of this subpart providing you monitor and record on a monthly basis the type of fuel combusted. If you intend to burn a new type of fuel or fuel mixture that does not meet the requirements of this paragraph, you must conduct a performance test within 60 days of burning the new fuel.

(f) For new or reconstructed affected boilers that have applicable work practice standards or management practices, you are not required to complete an initial performance tune-up, but you are required to complete the applicable biennial or 5-year tune-up as specified in § 63.11223 no later than 25 months or 61 months, respectively, after the initial startup of the new or reconstructed affected source.

(g) For affected boilers that ceased burning solid waste consistent with § 63.11196(d) and for which your initial compliance date has passed, you must demonstrate compliance within 60 days of the effective date of the waste-to-fuel switch as specified in § 60.2145(a)(2) and (3) of subpart CCCC or § 60.2710(a)(2) and (3) of subpart DDDD. If you have not conducted your compliance demonstration for this subpart within the previous 12 months, you must complete all compliance demonstrations for this subpart before you commence or recommence combustion of solid waste.

(h) For affected boilers that switch fuels or make a physical change to the boiler that results in the applicability of a different subcategory within subpart JJJJJJ or the boiler becoming subject to subpart JJJJJJ, you must demonstrate compliance within 180 days of the effective date of the fuel switch or the physical change. Notification of such changes must be submitted according to § 63.11225(g).

(i) For boilers located at existing major sources of HAP that limit their potential to emit (e.g., make a physical change or take a permit limit) such that the existing major source becomes an area source, you must comply with the applicable provisions as specified in paragraphs (i)(1) through (3) of this section.

(1) Any such existing boiler at the existing source must demonstrate compliance with subpart JJJJJJ within 180 days of the later of March 21, 2014 or upon the existing major source commencing operation as an area source.

(2) Any new or reconstructed boiler at the existing source must demonstrate compliance with subpart JJJJJJ within 180 days of the later of March 21, 2011 or startup.

(3) Notification of such changes must be submitted according to § 63.11225(g).

(j) For existing affected boilers that have not operated between the effective date of the rule and the compliance date that is specified for your source in § 63.11196, you must comply with the applicable provisions as specified in paragraphs (j)(1) through (3) of this section.

(1) You must complete the initial compliance demonstration, if subject to the emission limits in Table 1 to this subpart, as specified in paragraphs (a) and (b) of this section, no later than 180 days after the re-start of the affected boiler and according to the applicable provisions in § 63.7(a)(2).

(2) You must complete the initial performance tune-up, if subject to the tune-up requirements in § 63.11223, by following the procedures described in § 63.11223(b) no later than 30 days after the re-start of the affected boiler.

(3) You must complete the one-time energy assessment, if subject to the energy assessment requirements specified in Table 2 to this subpart, no

later than the compliance date specified in § 63.11196.

■ 10. Section 63.11211 is amended by revising paragraphs (a), (b)(1), and (b)(2) to read as follows:

§ 63.11211 How do I demonstrate initial compliance with the emission limits?

(a) For affected boilers that demonstrate compliance with any of the emission limits of this subpart through performance (stack) testing, your initial compliance requirements include conducting performance tests according to § 63.11212 and Table 4 to this subpart, conducting a fuel analysis for each type of fuel burned in your boiler according to § 63.11213 and Table 5 to this subpart, establishing operating limits according to § 63.11222, Table 6 to this subpart and paragraph (b) of this section, as applicable, and conducting CMS performance evaluations according to § 63.11224. For affected boilers that burn a single type of fuel, you are exempted from the compliance requirements of conducting a fuel analysis for each type of fuel burned in your boiler. For purposes of this subpart, boilers that use a supplemental fuel only for startup, unit shutdown, and transient flame stability purposes still qualify as affected boilers that burn a single type of fuel, and the supplemental fuel is not subject to the fuel analysis requirements under § 63.11213 and Table 5 to this subpart.

(b) * * *

(1) For a wet scrubber, you must establish the minimum scrubber liquid flow rate and minimum scrubber pressure drop as defined in § 63.11237, as your operating limits during the three-run performance stack test. If you use a wet scrubber and you conduct separate performance stack tests for PM and mercury emissions, you must establish one set of minimum scrubber liquid flow rate and pressure drop operating limits. If you conduct multiple performance stack tests, you must set the minimum scrubber liquid flow rate and pressure drop operating limits at the highest minimum values established during the performance stack tests.

(2) For an electrostatic precipitator operated with a wet scrubber, you must establish the minimum total secondary electric power (secondary voltage and secondary current), as defined in § 63.11237, as your operating limits during the three-run performance stack test.

* * * * *

■ 11. Section 63.11212 is amended by revising paragraphs (b) and (e) to read as follows:

§ 63.11212 What stack tests and procedures must I use for the performance tests?

* * * * *

(b) You must conduct each stack test according to the requirements in Table 4 to this subpart. Boilers that use a CEMS for carbon monoxide (CO) are exempt from the initial CO performance testing in Table 4 to this subpart and the oxygen concentration operating limit requirement specified in Table 3 to this subpart.

* * * * *

(e) To determine compliance with the emission limits, you must use the F-Factor methodology and equations in sections 12.2 and 12.3 of EPA Method 19 of appendix A–7 to part 60 of this chapter to convert the measured PM concentrations and the measured mercury concentrations that result from the performance test to pounds per million Btu heat input emission rates.

■ 12. Section 63.11214 is amended by revising paragraph (c) to read as follows:

§ 63.11214 How do I demonstrate initial compliance with the work practice standard, emission reduction measures, and management practice?

* * * * *

(c) If you own or operate an existing affected boiler with a heat input capacity of 10 million Btu per hour or greater, you must submit a signed certification in the Notification of Compliance Status report that an energy assessment of the boiler and its energy use systems was completed according to Table 2 to this subpart and is an accurate depiction of your facility.

* * * * *

■ 13. Section 63.11220 is revised to read as follows:

§ 63.11220 When must I conduct subsequent performance tests or fuel analyses?

(a) If your boiler has a heat input capacity of 10 million British thermal units per hour or greater, you must conduct all applicable performance (stack) tests according to § 63.11212 on a triennial basis, except as specified in paragraphs (b) through (d) of this section. Triennial performance tests must be completed no more than 37 months after the previous performance test.

(b) When demonstrating initial compliance with the PM emission limit, if your boiler's performance test results show that your PM emissions are equal to or less than half of the PM emission limit, you do not need to conduct further performance tests for PM but must continue to comply with all applicable operating limits and monitoring requirements. If your initial performance test results show that your PM emissions are greater than half of the PM emission limit, you must conduct subsequent performance tests as specified in paragraph (a) of this section.

(c) If you demonstrate compliance with the mercury emission limit based on fuel analysis, you must conduct a fuel analysis according to § 63.11213 for each type of fuel burned as specified in paragraphs (c)(1) and (2) of this section. If you plan to burn a new type of fuel or fuel mixture, you must conduct a fuel analysis before burning the new type of fuel or mixture in your boiler. You must recalculate the mercury emission rate using Equation 1 of § 63.11211. The recalculated mercury emission rate must be less than the applicable emission limit.

(1) When demonstrating initial compliance with the mercury emission limit, if the mercury constituents in the fuel or fuel mixture are measured to be equal to or less than half of the mercury emission limit, you do not need to conduct further fuel analysis sampling but must continue to comply with all applicable operating limits and monitoring requirements.

(2) When demonstrating initial compliance with the mercury emission limit, if the mercury constituents in the fuel or fuel mixture are greater than half of the mercury emission limit, you must conduct quarterly sampling.

(d) For existing affected boilers that have not operated since the previous compliance demonstration and more than 3 years have passed since the previous compliance demonstration, you must complete your subsequent compliance demonstration no later than 180 days after the re-start of the affected boiler.

■ 14. Section 63.11221 is revised to read as follows:

§ 63.11221 Is there a minimum amount of monitoring data I must obtain?

(a) You must monitor and collect data according to this section and the site-specific monitoring plan required by § 63.11205(c).

(b) You must operate the monitoring system and collect data at all required intervals at all times the affected source is operating and compliance is required, except for periods of monitoring system malfunctions or out-of-control periods (see § 63.8(c)(7) of this part), repairs associated with monitoring system malfunctions or out-of-control periods, and required monitoring system quality assurance or quality control activities including, as applicable, calibration checks, required zero and span

adjustments, and scheduled CMS maintenance as defined in your site-specific monitoring plan. A monitoring system malfunction is any sudden, infrequent, not reasonably preventable failure of the monitoring system to provide valid data. Monitoring system failures that are caused in part by poor maintenance or careless operation are not malfunctions. You are required to complete monitoring system repairs in response to monitoring system malfunctions or out-of-control periods and to return the monitoring system to operation as expeditiously as practicable.

(c) You may not use data collected during monitoring system malfunctions or out-of-control periods, repairs associated with monitoring system malfunctions or out-of-control periods, or required monitoring system quality assurance or quality control activities in calculations used to report emissions or operating levels. Any such periods must be reported according to the requirements in § 63.11225. You must use all the data collected during all other periods in assessing the operation of the control device and associated control system.

(d) Except for periods of monitoring system malfunctions or monitoring system out-of-control periods, repairs associated with monitoring system malfunctions or monitoring system out-of-control periods, and required monitoring system quality assurance or quality control activities (including, as applicable, calibration checks, required zero and span adjustments, and scheduled CMS maintenance as defined in your site-specific monitoring plan), failure to collect required data is a deviation of the monitoring requirements.

■ 15. Section 63.11223 is amended by revising paragraphs (a), (b) introductory text, (b)(1), (b)(3) through (5), (b)(6) introductory text, (b)(6)(i), (b)(6)(iii), (b)(7), and (c), and adding paragraphs (d) through (g) to read as follows:

§ 63.11223 How do I demonstrate continuous compliance with the work practice and management practice standards?

(a) For affected sources subject to the work practice standard or the management practices of a tune-up, you must conduct a performance tune-up according to paragraph (b) of this section and keep records as required in § 63.11225(c) to demonstrate continuous compliance. You must conduct the tune-up while burning the type of fuel (or fuels in the case of boilers that routinely burn two types of fuels at the same time) that provided the majority of the heat input to the boiler over the 12 months prior to the tune-up.

(b) Except as specified in paragraphs (c) through (f) of this section, you must conduct a tune-up of the boiler biennially to demonstrate continuous compliance as specified in paragraphs (b)(1) through (7) of this section. Each biennial tune-up must be conducted no more than 25 months after the previous tune-up. For a new or reconstructed boiler, the first biennial tune-up must be no later than 25 months after the initial startup of the new or reconstructed boiler.

(1) As applicable, inspect the burner, and clean or replace any components of the burner as necessary (you may delay the burner inspection until the next scheduled unit shutdown, not to exceed 36 months from the previous inspection). Units that produce electricity for sale may delay the burner inspection until the first outage, not to exceed 36 months from the previous inspection.

* * * * *

(3) Inspect the system controlling the air-to-fuel ratio, as applicable, and ensure that it is correctly calibrated and functioning properly (you may delay the inspection until the next scheduled unit shutdown, not to exceed 36 months from the previous inspection). Units that produce electricity for sale may delay the inspection until the first outage, not to exceed 36 months from the previous inspection.

(4) Optimize total emissions of CO. This optimization should be consistent with the manufacturer's specifications, if available, and with any nitrogen oxide requirement to which the unit is subject.

(5) Measure the concentrations in the effluent stream of CO in parts per million, by volume, and oxygen in volume percent, before and after the adjustments are made (measurements may be either on a dry or wet basis, as long as it is the same basis before and after the adjustments are made). Measurements may be taken using a portable CO analyzer.

(6) Maintain on-site and submit, if requested by the Administrator, a report containing the information in paragraphs (b)(6)(i) through (iii) of this section.

(i) The concentrations of CO in the effluent stream in parts per million, by volume, and oxygen in volume percent, measured at high fire or typical operating load, before and after the tune-up of the boiler.

* * * * *

(iii) The type and amount of fuel used over the 12 months prior to the tune-up of the boiler, but only if the unit was physically and legally capable of using more than one type of fuel during that period. Units sharing a fuel meter may estimate the fuel use by each unit.

(7) If the unit is not operating on the required date for a tune-up, the tune-up must be conducted within 30 days of startup.

(c) Boilers with an oxygen trim system that maintains an optimum air-to-fuel ratio that would otherwise be subject to a biennial tune-up must conduct a tune-up of the boiler every 5 years as specified in paragraphs (b)(1) through (7) of this section. Each 5-year tune-up must be conducted no more than 61 months after the previous tune-up. For a new or reconstructed boiler with an oxygen trim system, the first 5-year tune-up must be no later than 61 months after the initial startup. You may delay the burner inspection specified in paragraph (b)(1) of this section and inspection of the system controlling the air-to-fuel ratio specified in paragraph (b)(3) of this section until the next scheduled unit shutdown, but you must inspect each burner and system controlling the air-to-fuel ratio at least once every 72 months.

(d) Seasonal boilers must conduct a tune-up every 5 years as specified in paragraphs (b)(1) through (7) of this section. Each 5-year tune-up must be conducted no more than 61 months after the previous tune-up. For a new or reconstructed seasonal boiler, the first 5-year tune-up must be no later than 61 months after the initial startup. You may delay the burner inspection specified in paragraph (b)(1) of this section and inspection of the system controlling the air-to-fuel ratio specified in paragraph (b)(3) of this section until the next scheduled unit shutdown, but you must inspect each burner and system controlling the air-to-fuel ratio at least once every 72 months. Seasonal boilers are not subject to the emission limits in Table 1 to this subpart or the operating limits in Table 3 to this subpart.

(e) Oil-fired boilers with a heat input capacity of equal to or less than 5 million Btu per hour must conduct a tune-up every 5 years as specified in paragraphs (b)(1) through (7) of this section. Each 5-year tune-up must be conducted no more than 61 months after the previous tune-up. For a new or reconstructed oil-fired boiler with a heat input capacity of equal to or less than 5 million Btu per hour, the first 5-year tune-up must be no later than 61 months after the initial startup. You may delay the burner inspection specified in paragraph (b)(1) of this section and inspection of the system controlling the air-to-fuel ratio specified

in paragraph (b)(3) of this section until the next scheduled unit shutdown, but you must inspect each burner and system controlling the air-to-fuel ratio at least once every 72 months.

(f) Limited-use boilers must conduct a tune-up every 5 years as specified in paragraphs (b)(1) through (7) of this section. Each 5-year tune-up must be conducted no more than 61 months after the previous tune-up. For a new or reconstructed limited-use boiler, the first 5-year tune-up must be no later than 61 months after the initial startup. You may delay the burner inspection specified in paragraph (b)(1) of this section and inspection of the system controlling the air-to-fuel ratio specified in paragraph (b)(3) of this section until the next scheduled unit shutdown, but you must inspect each burner and system controlling the air-to-fuel ratio at least once every 72 months. Limited-use boilers are not subject to the emission limits in Table 1 to this subpart, the energy assessment requirements in Table 2 to this subpart, or the operating limits in Table 3 to this subpart.

(g) If you own or operate a boiler subject to emission limits in Table 1 of this subpart, you must minimize the boiler's startup and shutdown periods following the manufacturer's recommended procedures, if available. If manufacturer's recommended procedures are not available, you must follow recommended procedures for a unit of similar design for which manufacturer's recommended procedures are available. You must submit a signed statement in the Notification of Compliance Status report that indicates that you conducted startups and shutdowns according to the manufacturer's recommended procedures or procedures specified for a boiler of similar design if manufacturer's recommended procedures are not available.

■ 16. Section 63.11224 is amended by:

■ a. Revising paragraphs (a) introductory text, (a)(1) through (3), (a)(5), (a)(6),

■ b. Adding paragraph (a)(7).

■ c. Revising paragraphs (c)(1) introductory text, (c)(2) introductory text, and (d).

■ d. Revising paragraphs (e) introductory text, (e)(6), and (e)(7).

■ e. Adding paragraph (e)(8).

■ f. Revising paragraph (f)(7).

The revisions and additions read as follows:

§ 63.11224 What are my monitoring, installation, operation, and maintenance requirements?

(a) If your boiler is subject to a CO emission limit in Table 1 to this subpart, you must either install, operate, and maintain a CEMS for CO and oxygen according to the procedures in paragraphs (a)(1) through (6) of this section, or install, calibrate, operate, and maintain an oxygen analyzer system, as defined in § 63.11237, according to the manufacturer's recommendations and paragraphs (a)(7) and (d) of this section, as applicable, by the compliance date specified in § 63.11196. Where a certified CO CEMS is used, the CO level shall be monitored at the outlet of the boiler, after any add-on controls or flue gas recirculation system and before release to the atmosphere. Boilers that use a CO CEMS are exempt from the initial CO performance testing and oxygen concentration operating limit requirements specified in § 63.11211(a) of this subpart. Oxygen monitors and oxygen trim systems must be installed to monitor oxygen in the boiler flue gas, boiler firebox, or other appropriate intermediate location.

(1) Each CO CEMS must be installed, operated, and maintained according to the applicable procedures under Performance Specification 4, 4A, or 4B at 40 CFR part 60, appendix B, and each oxygen CEMS must be installed, operated, and maintained according to Performance Specification 3 at 40 CFR part 60, appendix B. Both the CO and oxygen CEMS must also be installed, operated, and maintained according to the site-specific monitoring plan developed according to paragraph (c) of this section.

(2) You must conduct a performance evaluation of each CEMS according to the requirements in § 63.8(e) and according to Performance Specifications 3 and 4, 4A, or 4B at 40 CFR part 60, appendix B.

(3) Each CEMS must complete a minimum of one cycle of operation (sampling, analyzing, and data recording) every 15 minutes. You must have CEMS data values from a minimum of four successive cycles of operation representing each of the four 15-minute periods in an hour, or at least two 15-minute data values during an hour when CEMS calibration, quality assurance, or maintenance activities are being performed, to have a valid hour of data.

* * * * *

(5) You must calculate hourly averages, corrected to 3 percent oxygen, from each hour of CO CEMS data in parts per million CO concentrations and determine the 10-day rolling average of all recorded readings, except as provided in § 63.11221(c). Calculate a 10-day rolling average from all of the hourly averages collected for the 10-day operating period using Equation 2 of this section.

$$\text{10-day average} = \frac{\Sigma_{i=1}^{n} Hpvi}{n} \qquad \text{(Eq.2)}$$

Where:

Hpvi = the hourly parameter value for hour i

n = the number of valid hourly parameter values collected over 10 boiler operating days

(6) For purposes of collecting CO data, you must operate the CO CEMS as specified in § 63.11221(b). For purposes of calculating data averages, you must use all the data collected during all periods in assessing compliance, except that you must exclude certain data as specified in § 63.11221(c). Periods when CO data are unavailable may constitute monitoring deviations as specified in § 63.11221(d).

(7) You must operate the oxygen analyzer system at or above the minimum oxygen level that is established as the operating limit according to Table 6 to this subpart when firing the fuel or fuel mixture utilized during the most recent CO performance stack test. Operation of oxygen trim systems to meet these requirements shall not be done in a manner which compromises furnace safety.

* * * * *

(c) * * *

(1) For each CMS required in this section, you must develop, and submit to the EPA Administrator for approval upon request, a site-specific monitoring plan that addresses paragraphs (c)(1)(i) through (iii) of this section. You must submit this site-specific monitoring plan (if requested) at least 60 days before your initial performance evaluation of your CMS.

* * * * *

(2) In your site-specific monitoring plan, you must also address paragraphs (c)(2)(i) through (iii) of this section.

* * * * *

(d) If you have an operating limit that requires the use of a CMS, you must install, operate, and maintain each CPMS according to the procedures in paragraphs (d)(1) through (4) of this section.

(1) The CPMS must complete a minimum of one cycle of operation every 15 minutes. You must have data values from a minimum of four successive cycles of operation representing each of the four 15-minute periods in an hour, or at least two 15-minute data values during an hour when CMS calibration, quality assurance, or maintenance activities are being performed, to have a valid hour of data.

(2) You must calculate hourly arithmetic averages from each hour of CPMS data in units of the operating limit and determine the 30-day rolling average of all recorded readings, except as provided in § 63.11221(c). Calculate a 30-day rolling average from all of the hourly averages collected for the 30-day operating period using Equation 3 of this section.

$$\text{30-day average} = \frac{\Sigma_{i=1}^{n} Hpvi}{n} \qquad \text{(Eq.3)}$$

Where:

Hpvi = the hourly parameter value for hour i

n = the number of valid hourly parameter values collected over 30 boiler operating days

(3) For purposes of collecting data, you must operate the CPMS as specified in § 63.11221(b). For purposes of calculating data averages, you must use all the data collected during all periods in assessing compliance, except that you must exclude certain data as specified in § 63.11221(c). Periods when CPMS data are unavailable may constitute monitoring deviations as specified in § 63.11221(d).

(4) Record the results of each inspection, calibration, and validation check.

(e) If you have an applicable opacity operating limit under this rule, you must install, operate, certify and maintain each COMS according to the procedures in paragraphs (e)(1) through (8) of this section by the compliance date specified in § 63.11196.

* * * * *

(6) You must operate and maintain each COMS according to the requirements in the monitoring plan and the requirements of § 63.8(e). You must identify periods the COMS is out of control including any periods that the COMS fails to pass a daily calibration drift assessment, a quarterly performance audit, or an annual zero alignment audit.

(7) You must calculate and record 6-minute averages from the opacity monitoring data and determine and record the daily block average of recorded readings, except as provided in § 63.11221(c).

(8) For purposes of collecting opacity data, you must operate the COMS as specified in § 63.11221(b). For purposes of calculating data averages, you must use all the data collected during all periods in assessing compliance, except that you must exclude certain data as specified in § 63.11221(c). Periods when COMS data are unavailable may constitute monitoring deviations as specified in § 63.11221(d).

(f) * * *

(7) For positive pressure fabric filter systems that do not duct all compartments or cells to a common stack, a bag leak detection system must be installed in each baghouse compartment or cell.

* * * * *

■ 17. Section 63.11225 is amended by:

■ a. Revising paragraphs (a) introductory text, (a)(1), (a)(2), (a)(4), (a)(5), (b) introductory text, (b)(2), (c) introductory text, (c)(2) introductory text, and (c)(2)(ii).

■ b. Adding paragraphs (c)(2)(iii) through (vi).

■ c. Revising paragraphs (d), (e), and (g).

The revisions and additions read as follows:

§ 63.11225 What are my notification, reporting, and recordkeeping, requirements?

(a) You must submit the notifications specified in paragraphs (a)(1) through (5) of this section to the administrator.

(1) You must submit all of the notifications in §§ 63.7(b); 63.8(e) and (f); and 63.9(b) through (e), (g), and (h) that apply to you by the dates specified in those sections except as specified in paragraphs (a)(2) and (4) of this section.

(2) An Initial Notification must be submitted no later than January 20, 2014 or within 120 days after the source becomes subject to the standard.

* * * * *

(4) You must submit the Notification of Compliance Status no later than 120 days after the applicable compliance date specified in § 63.11196 unless you must conduct a performance stack test. If you must conduct a performance stack test, you must submit the Notification of Compliance Status within 60 days of completing the performance stack test. You must submit the Notification of Compliance Status in accordance with paragraphs (a)(4)(i) and (vi) of this section. The Notification of Compliance Status must include the information and certification(s) of compliance in paragraphs (a)(4)(i) through (v) of this section, as applicable, and signed by a responsible official.

(i) You must submit the information required in § 63.9(h)(2), except the information listed in § 63.9(h)(2)(i)(B), (D), (E), and (F). If you conduct any performance tests or CMS performance evaluations, you must submit that data as specified in paragraph (e) of this section. If you conduct any opacity or visible emission observations, or other monitoring procedures or methods, you must submit that data to the Administrator at the appropriate address listed in § 63.13.

(ii) ''This facility complies with the requirements in § 63.11214 to conduct an initial tune-up of the boiler.''

(iii) ''This facility has had an energy assessment performed according to § 63.11214(c).''

(iv) For units that install bag leak detection systems: ''This facility complies with the requirements in § 63.11224(f).''

(v) For units that do not qualify for a statutory exemption as provided in section 129(g)(1) of the Clean Air Act: ''No secondary materials that are solid waste were combusted in any affected unit.''

(vi) The notification must be submitted electronically using the Compliance and Emissions Data Reporting Interface (CEDRI) that is accessed through EPA's Central Data Exchange (CDX) (*www.epa.gov/cdx*). However, if the reporting form specific to this subpart is not available in CEDRI at the time that the report is due, the written Notification of Compliance Status must be submitted to the

Administrator at the appropriate address listed in § 63.13.

(5) If you are using data from a previously conducted emission test to serve as documentation of conformance with the emission standards and operating limits of this subpart, you must include in the Notification of Compliance Status the date of the test and a summary of the results, not a complete test report, relative to this subpart.

(b) You must prepare, by March 1 of each year, and submit to the delegated authority upon request, an annual compliance certification report for the previous calendar year containing the information specified in paragraphs (b)(1) through (4) of this section. You must submit the report by March 15 if you had any instance described by paragraph (b)(3) of this section. For boilers that are subject only to a requirement to conduct a biennial or 5-year tune-up according to § 63.11223(a) and not subject to emission limits or operating limits, you may prepare only a biennial or 5-year compliance report as specified in paragraphs (b)(1) and (2) of this section.

* * * * *

(2) Statement by a responsible official, with the official's name, title, phone number, email address, and signature, certifying the truth, accuracy and completeness of the notification and a statement of whether the source has complied with all the relevant standards and other requirements of this subpart. Your notification must include the following certification(s) of compliance, as applicable, and signed by a responsible official:

(i) ''This facility complies with the requirements in § 63.11223 to conduct a biennial or 5-year tune-up, as applicable, of each boiler.''

(ii) For units that do not qualify for a statutory exemption as provided in section 129(g)(1) of the Clean Air Act: ''No secondary materials that are solid waste were combusted in any affected unit.''

(iii) ''This facility complies with the requirement in §§ 63.11214(d) and 63.11223(g) to minimize the boiler's time spent during startup and shutdown and to conduct startups and shutdowns according to the manufacturer's recommended procedures or procedures specified for a boiler of similar design if manufacturer's recommended procedures are not available.''

* * * * *

(c) You must maintain the records specified in paragraphs (c)(1) through (7) of this section.

* * * * *

(2) You must keep records to document conformance with the work practices, emission reduction measures, and management practices required by § 63.11214 and § 63.11223 as specified in paragraphs (c)(2)(i) through (vi) of this section.

* * * * *

(ii) For operating units that combust non-hazardous secondary materials that have been determined not to be solid waste pursuant to § 241.3(b)(1) of this chapter, you must keep a record which documents how the secondary material meets each of the legitimacy criteria under § 241.3(d)(1). If you combust a fuel that has been processed from a discarded non-hazardous secondary material pursuant to § 241.3(b)(4) of this chapter, you must keep records as to how the operations that produced the fuel satisfies the definition of processing in § 241.2 and each of the legitimacy criteria in § 241.3(d)(1) of this chapter. If the fuel received a non-waste determination pursuant to the petition process submitted under § 241.3(c) of this chapter, you must keep a record that documents how the fuel satisfies the requirements of the petition process. For operating units that combust non-hazardous secondary materials as fuel per § 241.4, you must keep records documenting that the material is a listed non-waste under § 241.4(a).

(iii) For each boiler required to conduct an energy assessment, you must keep a copy of the energy assessment report.

(iv) For each boiler subject to an emission limit in Table 1 to this subpart, you must also keep records of monthly fuel use by each boiler, including the type(s) of fuel and amount(s) used.

(v) For each boiler that meets the definition of seasonal boiler, you must keep records of days of operation per year.

(vi) For each boiler that meets the definition of limited-use boiler, you must keep a copy of the federally enforceable permit that limits the annual capacity factor to less than or equal to 10 percent and records of fuel use for the days the boiler is operating.

* * * * *

(d) Your records must be in a form suitable and readily available for expeditious review. You must keep each record for 5 years following the date of each recorded action. You must keep each record on-site or be accessible from a central location by computer or other means that instantly provide access at the site for at least 2 years after the date of each recorded action. You may keep the records off site for the remaining 3 years.

(e)(1) Within 60 days after the date of completing each performance test (defined in § 63.2) as required by this subpart you must submit the results of the performance tests, including any associated fuel analyses, required by this subpart to EPA's WebFIRE database by using CEDRI that is accessed through EPA's CDX (www.epa.gov/cdx). Performance test data must be submitted in the file format generated through use of EPA's Electronic Reporting Tool (ERT) (see *http://www.epa.gov/ttn/chief/ert/index.html*). Only data collected using test methods on the ERT Web site are subject to this requirement for submitting reports electronically to WebFIRE. Owners or operators who claim that some of the information being submitted for performance tests is confidential business information (CBI) must submit a complete ERT file including information claimed to be CBI on a compact disk or other commonly used electronic storage media (including, but not limited to, flash drives) to EPA. The electronic media must be clearly marked as CBI and mailed to U.S. EPA/OAPQS/CORE CBI Office, Attention: WebFIRE Administrator, MD C404–02, 4930 Old Page Rd., Durham, NC 27703. The same ERT file with the CBI omitted must be submitted to EPA via CDX as described earlier in this paragraph. At the discretion of the delegated authority, you must also submit these reports, including CBI, to the delegated authority in the format specified by the delegated authority. For any performance test conducted using test methods that are not listed on the ERT Web site, the owner or operator shall submit the results of the performance test in paper submissions to the Administrator at the appropriate address listed in § 63.13.

(2) Within 60 days after the date of completing each CEMS performance evaluation test as defined in § 63.2, you must submit relative accuracy test audit (RATA) data to EPA's CDX by using CEDRI in accordance with paragraph (e)(1) of this section. Only RATA pollutants that can be documented with the ERT (as listed on the ERT Web site) are subject to this requirement. For any performance evaluations with no corresponding RATA pollutants listed on the ERT Web site, the owner or operator shall submit the results of the performance evaluation in paper submissions to the Administrator at the appropriate address listed in § 63.13.

* * * * *

(g) If you have switched fuels or made a physical change to the boiler and the fuel switch or change resulted in the

applicability of a different subcategory within subpart JJJJJJ, in the boiler becoming subject to subpart JJJJJJ, or in the boiler switching out of subpart JJJJJJ due to a change to 100 percent natural gas, or you have taken a permit limit that resulted in you being subject to subpart JJJJJJ, you must provide notice of the date upon which you switched fuels, made the physical change, or took a permit limit within 30 days of the change. The notification must identify:

(1) The name of the owner or operator of the affected source, the location of the source, the boiler(s) that have switched fuels, were physically changed, or took a permit limit, and the date of the notice.

(2) The date upon which the fuel switch, physical change, or permit limit occurred.

18. Section 63.11226 is revised to read as follows:

§ 63.11226 Affirmative defense for violation of emission standards during malfunction.

In response to an action to enforce the standards set forth in § 63.11201 you may assert an affirmative defense to a claim for civil penalties for violations of such standards that are caused by malfunction, as defined at 40 CFR 63.2. Appropriate penalties may be assessed if you fail to meet your burden of proving all of the requirements in the affirmative defense. The affirmative defense shall not be available for claims for injunctive relief.

(a) *Assertion of affirmative defense.* To establish the affirmative defense in any action to enforce such a standard, you must timely meet the reporting requirements in paragraph (b) of this section, and must prove by a preponderance of evidence that:

(1) The violation:

(i) Was caused by a sudden, infrequent, and unavoidable failure of air pollution control equipment, process equipment, or a process to operate in a normal or usual manner; and

(ii) Could not have been prevented through careful planning, proper design or better operation and maintenance practices; and

(iii) Did not stem from any activity or event that could have been foreseen and avoided, or planned for; and

(iv) Was not part of a recurring pattern indicative of inadequate design, operation, or maintenance; and

(2) Repairs were made as expeditiously as possible when a violation occurred; and

(3) The frequency, amount, and duration of the violation (including any bypass) were minimized to the maximum extent practicable; and

(4) If the violation resulted from a bypass of control equipment or a process, then the bypass was unavoidable to prevent loss of life, personal injury, or severe property damage; and

(5) All possible steps were taken to minimize the impact of the violation on ambient air quality, the environment, and human health; and

(6) All emissions monitoring and control systems were kept in operation if at all possible, consistent with safety and good air pollution control practices; and

(7) All of the actions in response to the violation were documented by properly signed, contemporaneous operating logs; and

(8) At all times, the affected source was operated in a manner consistent with good practices for minimizing emissions; and

(9) A written root cause analysis has been prepared, the purpose of which is to determine, correct, and eliminate the primary causes of the malfunction and the violation resulting from the malfunction event at issue. The analysis shall also specify, using best monitoring methods and engineering judgment, the amount of any emissions that were the result of the malfunction.

(b) *Report.* The owner or operator seeking to assert an affirmative defense shall submit a written report to the Administrator with all necessary supporting documentation, that it has met the requirements set forth in paragraph (a) of this section. This affirmative defense report shall be included in the first periodic compliance, deviation report or excess emission report otherwise required after the initial occurrence of the violation of the relevant standard (which may be the end of any applicable averaging period). If such compliance, deviation report or excess emission report is due less than 45 days after the initial occurrence of the violation, the affirmative defense report may be included in the second compliance, deviation report or excess emission report due after the initial occurrence of the violation of the relevant standard.

■ 19. Section 63.11236 is amended by revising paragraph (a) to read as follows:

§ 63.11236 Who implements and enforces this subpart?

(a) This subpart can be implemented and enforced by EPA or an administrator such as your state, local, or tribal agency. If the EPA Administrator has delegated authority to your state, local, or tribal agency, then that agency has the authority to implement and enforce this subpart. You should contact your EPA Regional Office to find out if implementation and enforcement of this subpart is delegated to your state, local, or tribal agency.

* * * * *

■ 20. Section 63.11237 is amended as follows:

■ a. By adding definitions in alphabetical order for ''10-day rolling average,'' ''30-day rolling average,'' ''Annual heat input,'' ''Biodiesel,'' ''Calendar year,'' ''Common stack,'' ''Daily block average,'' ''Distillate oil,'' ''Electric boiler,'' ''Electric utility steam generating unit (EGU),'' ''Energy management program,'' ''Fluidized bed boiler,'' ''Fluidized bed combustion,'' ''Hourly average,'' ''Limited-use boiler,'' ''Load fraction,'' ''Minimum scrubber pressure drop,'' ''Minimum sorbent injection rate,'' ''Minimum total secondary electric power,'' ''Operating day,'' ''Oxygen analyzer system,'' ''Oxygen trim system,'' ''Process heater,'' ''Regulated gas stream,'' ''Residential boiler,'' ''Residual oil,'' ''Seasonal boiler,'' ''Shutdown,'' ''Solid fuel,'' ''Startup,'' ''Temporary boiler,'' ''Tune-up,'' ''Vegetable oil,'' ''Voluntary Consensus Standards (VCS),'' and ''Wet scrubber.''

■ b. By revising the definitions for ''Bag leak detection system,'' ''Biomass subcategory,'' ''Boiler,'' ''Boiler system,'' ''Deviation,'' ''Dry scrubber,'' ''Electrostatic precipitator (ESP),'' ''Energy assessment,'' ''Energy use system,'' ''Federally enforceable,'' ''Gas-fired boiler,'' ''Heat input,'' ''Hot water heater,'' ''Institutional boiler,'' ''Liquid fuel,'' ''Minimum activated carbon injection rate,'' ''Minimum oxygen level,'' ''Minimum scrubber liquid flow rate,'' ''Natural gas,'' ''Oil subcategory,'' ''Particulate matter,'' ''Period of gas curtailment or supply interruption,'' ''Qualified Energy Assessor,'' ''Solid fossil fuel,'' and ''Waste heat boiler.''

■ c. By removing the definitions for ''Annual heat input basis,'' ''Minimum PM scrubber pressure drop,'' ''Minimum sorbent flow rate,'' and ''Minimum voltage or amperage''.

§ 63.11237 What definitions apply to this subpart?

10-day rolling average means the arithmetic mean of all valid hours of data from 10 successive operating days, except for periods of startup and shutdown and periods when the unit is not operating.

30-day rolling average means the arithmetic mean of all valid hours of data from 30 successive operating days, except for periods of startup and shutdown and periods when the unit is not operating.

* * * * *

Annual heat input means the heat input for the 12 months preceding the compliance demonstration.

Bag leak detection system means a group of instruments that are capable of monitoring particulate matter loadings in the exhaust of a fabric filter (*i.e.,* baghouse) in order to detect bag failures. A bag leak detection system includes, but is not limited to, an instrument that operates on electrodynamic, triboelectric, light scattering, light transmittance, or other principle to monitor relative particulate matter loadings.

Biodiesel means a mono-alkyl ester derived from biomass and conforming to ASTM D6751–11b, Standard Specification for Biodiesel Fuel Blend Stock (B100) for Middle Distillate Fuels (incorporated by reference, see § 63.14).

* * * * *

Biomass subcategory includes any boiler that burns any biomass and is not in the coal subcategory.

Boiler means an enclosed device using controlled flame combustion in which water is heated to recover thermal energy in the form of steam and/or hot water. Controlled flame combustion refers to a steady-state, or near steady-state, process wherein fuel and/or oxidizer feed rates are controlled. A device combusting solid waste, as defined in § 241.3 of this chapter, is not a boiler unless the device is exempt from the definition of a solid waste incineration unit as provided in section 129(g)(1) of the Clean Air Act. Waste heat boilers, process heaters, and autoclaves are excluded from the definition of *Boiler*.

Boiler system means the boiler and associated components, such as, feedwater systems, combustion air systems, fuel systems (including burners), blowdown systems, combustion control systems, steam systems, and condensate return systems, directly connected to and serving the energy use systems.

Calendar year means the period between January 1 and December 31, inclusive, for a given year.

* * * * *

Common stack means the exhaust of emissions from two or more affected units through a single flue. Affected units with a common stack may each have separate air pollution control systems located before the common stack, or may have a single air pollution control system located after the exhausts come together in a single flue.

Daily block average means the arithmetic mean of all valid emission concentrations or parameter levels recorded when a unit is operating measured over the 24-hour period from 12 a.m. (midnight) to 12 a.m. (midnight), except for periods of startup and shutdown and periods when the unit is not operating.

Deviation (1) Means any instance in which an affected source subject to this subpart, or an owner or operator of such a source:

(i) Fails to meet any applicable requirement or obligation established by this subpart including, but not limited to, any emission limit, operating limit, or work practice standard; or

(ii) Fails to meet any term or condition that is adopted to implement an applicable requirement in this subpart and that is included in the operating permit for any affected source required to obtain such a permit.

(2) A deviation is not always a violation.

Distillate oil means fuel oils that contain 0.05 weight percent nitrogen or less and comply with the specifications for fuel oil numbers 1 and 2, as defined by the American Society of Testing and Materials in ASTM D396 (incorporated by reference, see § 63.14) or diesel fuel oil numbers 1 and 2, as defined by the American Society for Testing and Materials in ASTM D975 (incorporated by reference, see § 63.14), kerosene, and biodiesel as defined by the American Society of Testing and Materials in ASTM D6751–11b (incorporated by reference, see § 63.14).

Dry scrubber means an add-on air pollution control system that injects dry alkaline sorbent (dry injection) or sprays an alkaline sorbent (spray dryer) to react with and neutralize acid gas in the exhaust stream forming a dry powder material. Sorbent injection systems used as control devices in fluidized bed boilers and process heaters are included in this definition. A dry scrubber is a dry control system.

Electric boiler means a boiler in which electric heating serves as the source of heat. Electric boilers that burn gaseous or liquid fuel during periods of electrical power curtailment or failure are included in this definition.

Electric utility steam generating unit (EGU) means a fossil fuel-fired combustion unit of more than 25 megawatts that serves a generator that produces electricity for sale. A fossil fuel-fired unit that cogenerates steam and electricity and supplies more than one-third of its potential electric output capacity and more than 25 megawatts electrical output to any utility power distribution system for sale is considered an electric utility steam generating unit. To be ''capable of combusting'' fossil fuels, an EGU would need to have these fuels allowed in their operating permits and have the appropriate fuel handling facilities on-site or otherwise available (*e.g.,* coal handling equipment, including coal storage area, belts and conveyers, pulverizers, etc.; oil storage facilities). In addition, fossil fuel-fired EGU means any EGU that fired fossil fuel for more than 10.0 percent of the average annual heat input in any 3 consecutive calendar years or for more than 15.0 percent of the annual heat input during any one calendar year after April 16, 2015.

Electrostatic precipitator (ESP) means an add-on air pollution control device used to capture particulate matter by charging the particles using an electrostatic field, collecting the particles using a grounded collecting surface, and transporting the particles into a hopper. An electrostatic precipitator is usually a dry control system.

Energy assessment means the following for the emission units covered by this subpart:

(1) The energy assessment for facilities with affected boilers with less than 0.3 trillion Btu per year (TBtu/year) heat input capacity will be 8 on-site technical labor hours in length maximum, but may be longer at the discretion of the owner or operator of the affected source. The boiler system(s) and any on-site energy use system(s) accounting for at least 50 percent of the affected boiler(s) energy (*e.g.,* steam, hot water, or electricity) production, as applicable, will be evaluated to identify energy savings opportunities, within the limit of performing an 8-hour energy assessment.

(2) The energy assessment for facilities with affected boilers with 0.3 to 1.0 TBtu/year heat input capacity will be 24 on-site technical labor hours in length maximum, but may be longer at the discretion of the owner or operator of the affected source. The boiler system(s) and any on-site energy use system(s) accounting for at least 33 percent of the affected boiler(s) energy (*e.g.,* steam, hot water, or electricity) production, as applicable, will be evaluated to identify energy savings opportunities, within the limit of performing a 24-hour energy assessment.

(3) The energy assessment for facilities with affected boilers with greater than 1.0 TBtu/year heat input capacity will be up to 24 on-site technical labor hours in length for the first TBtu/year plus 8 on-site technical labor hours for every additional 1.0 TBtu/year not to exceed 160 on-site technical hours, but may be longer at the discretion of the owner or operator of the affected source. The boiler

system(s) and any on-site energy use system(s) accounting for at least 20 percent of the affected boiler(s) energy (*e.g.,* steam, hot water, or electricity) production, as applicable, will be evaluated to identify energy savings opportunities.

(4) The on-site energy use system(s) serving as the basis for the percent of affected boiler(s) energy production, as applicable, in paragraphs (1), (2), and (3) of this definition may be segmented by production area or energy use area as most logical and applicable to the specific facility being assessed (*e.g.,* product X manufacturing area; product Y drying area; Building Z).

Energy management program means a program that includes a set of practices and procedures designed to manage energy use that are demonstrated by the facility's energy policies, a facility energy manager and other staffing responsibilities, energy performance measurement and tracking methods, an energy saving goal, action plans, operating procedures, internal reporting requirements, and periodic review intervals used at the facility. Facilities may establish their program through energy management systems compatible with ISO 50001.

Energy use system (1) Includes the following systems located on the site of the affected boiler that use energy provided by the boiler:

(i) Process heating; compressed air systems; machine drive (motors, pumps, fans); process cooling; facility heating, ventilation, and air conditioning systems; hot water systems; building envelop; and lighting; or

(ii) Other systems that use steam, hot water, process heat, or electricity, provided by the affected boiler.

(2) Energy use systems are only those systems using energy clearly produced by affected boilers.

* * * * *

Federally enforceable means all limitations and conditions that are enforceable by the EPA Administrator, including, but not limited to, the requirements of 40 CFR parts 60, 61, 63, and 65, requirements within any applicable state implementation plan, and any permit requirements established under 40 CFR 52.21 or under 40 CFR 51.18 and 40 CFR 51.24.

Fluidized bed boiler means a boiler utilizing a fluidized bed combustion process that is not a pulverized coal boiler.

Fluidized bed combustion means a process where a fuel is burned in a bed of granulated particles, which are maintained in a mobile suspension by the forward flow of air and combustion products.

* * * * *

Gas-fired boiler includes any boiler that burns gaseous fuels not combined with any solid fuels and burns liquid fuel only during periods of gas curtailment, gas supply interruption, startups, or periodic testing on liquid fuel. Periodic testing of liquid fuel shall not exceed a combined total of 48 hours during any calendar year.

Heat input means heat derived from combustion of fuel in a boiler and does not include the heat input from preheated combustion air, recirculated flue gases, returned condensate, or exhaust gases from other sources such as gas turbines, internal combustion engines, kilns.

Hot water heater means a closed vessel with a capacity of no more than 120 U.S. gallons in which water is heated by combustion of gaseous, liquid, or biomass fuel and hot water is withdrawn for use external to the vessel. Hot water boilers (*i.e.,* not generating steam) combusting gaseous, liquid, or biomass fuel with a heat input capacity of less than 1.6 million Btu per hour are included in this definition. The 120 U.S. gallon capacity threshold to be considered a hot water heater is independent of the 1.6 million Btu per hour heat input capacity threshold for hot water boilers. Hot water heater also means a tankless unit that provides on-demand hot water.

Hourly average means the arithmetic average of at least four CMS data values representing the four 15-minute periods in an hour, or at least two 15-minute data values during an hour when CMS calibration, quality assurance, or maintenance activities are being performed.

* * * * *

Institutional boiler means a boiler used in institutional establishments such as, but not limited to, medical centers, nursing homes, research centers, institutions of higher education, elementary and secondary schools, libraries, religious establishments, and governmental buildings to provide electricity, steam, and/or hot water.

Limited-use boiler means any boiler that burns any amount of solid or liquid fuels and has a federally enforceable average annual capacity factor of no more than 10 percent.

Liquid fuel includes, but is not limited to, distillate oil, residual oil, any form of liquid fuel derived from petroleum, used oil meeting the specification in 40 CFR 279.11, liquid biofuels, biodiesel, and vegetable oil, and comparable fuels as defined under 40 CFR 261.38.

Load fraction means the actual heat input of a boiler divided by heat input during the performance test that established the minimum sorbent injection rate or minimum activated carbon injection rate, expressed as a fraction (*e.g.,* for 50 percent load the load fraction is 0.5).

Minimum activated carbon injection rate means load fraction multiplied by the lowest hourly average activated carbon injection rate measured according to Table 6 to this subpart during the most recent performance stack test demonstrating compliance with the applicable emission limit.

Minimum oxygen level means the lowest hourly average oxygen level measured according to Table 6 to this subpart during the most recent performance stack test demonstrating compliance with the applicable carbon monoxide emission limit.

Minimum scrubber liquid flow rate means the lowest hourly average scrubber liquid flow rate (*e.g.,* to the particulate matter scrubber) measured according to Table 6 to this subpart during the most recent performance stack test demonstrating compliance with the applicable emission limit.

Minimum scrubber pressure drop means the lowest hourly average scrubber pressure drop measured according to Table 6 to this subpart during the most recent performance stack test demonstrating compliance with the applicable emission limit.

Minimum sorbent injection rate means:

(1) The load fraction multiplied by the lowest hourly average sorbent injection rate for each sorbent measured according to Table 6 to this subpart during the most recent performance stack test demonstrating compliance with the applicable emission limits; or

(2) For fluidized bed combustion, the lowest average ratio of sorbent to sulfur measured during the most recent performance test.

Minimum total secondary electric power means the lowest hourly average total secondary electric power determined from the values of secondary voltage and secondary current to the electrostatic precipitator measured according to Table 6 to this subpart during the most recent performance stack test demonstrating compliance with the applicable emission limits.

Natural gas means:

(1) A naturally occurring mixture of hydrocarbon and nonhydrocarbon gases found in geologic formations beneath

the earth's surface, of which the principal constituent is methane; or

(2) Liquefied petroleum gas, as defined by the American Society for Testing and Materials in ASTM D1835 (incorporated by reference, see § 63.14); or

(3) A mixture of hydrocarbons that maintains a gaseous state at ISO conditions (*i.e.,* a temperature of 288 Kelvin, a relative humidity of 60 percent, and a pressure of 101.3 kilopascals). Additionally, natural gas must either be composed of at least 70 percent methane by volume or have a gross calorific value between 35 and 41 megajoules (MJ) per dry standard cubic meter (950 and 1,100 Btu per dry standard cubic foot); or

(4) Propane or propane-derived synthetic natural gas. Propane means a colorless gas derived from petroleum and natural gas, with the molecular structure C_3H_8.

Oil subcategory includes any boiler that burns any liquid fuel and is not in either the biomass or coal subcategories. Gas-fired boilers that burn liquid fuel only during periods of gas curtailment, gas supply interruptions, startups, or for periodic testing are not included in this definition. Periodic testing on liquid fuel shall not exceed a combined total of 48 hours during any calendar year.

* * * * *

Operating day means a 24-hour period between 12 midnight and the following midnight during which any fuel is combusted at any time in the boiler unit. It is not necessary for fuel to be combusted for the entire 24-hour period.

Oxygen analyzer system means all equipment required to determine the oxygen content of a gas stream and used to monitor oxygen in the boiler flue gas, boiler firebox, or other appropriate intermediate location. This definition includes oxygen trim systems.

Oxygen trim system means a system of monitors that is used to maintain excess air at the desired level in a combustion device. A typical system consists of a flue gas oxygen and/or carbon monoxide monitor that automatically provides a feedback signal to the combustion air controller.

Particulate matter (PM) means any finely divided solid or liquid material, other than uncombined water, as measured by the test methods specified under this subpart, or an approved alternative method.

* * * * *

Period of gas curtailment or supply interruption means a period of time during which the supply of gaseous fuel to an affected boiler is restricted or halted for reasons beyond the control of the facility. The act of entering into a contractual agreement with a supplier of natural gas established for curtailment purposes does not constitute a reason that is under the control of a facility for the purposes of this definition. An increase in the cost or unit price of natural gas due to normal market fluctuations not during periods of supplier delivery restriction does not constitute a period of natural gas curtailment or supply interruption. On-site gaseous fuel system emergencies or equipment failures qualify as periods of supply interruption when the emergency or failure is beyond the control of the facility.

Process heater means an enclosed device using controlled flame, and the unit's primary purpose is to transfer heat indirectly to a process material (liquid, gas, or solid) or to a heat transfer material (e.g., glycol or a mixture of glycol and water) for use in a process unit, instead of generating steam. Process heaters are devices in which the combustion gases do not come into direct contact with process materials. Process heaters include units that heat water/water mixtures for pool heating, sidewalk heating, cooling tower water heating, power washing, or oil heating.

Qualified energy assessor means:

(1) Someone who has demonstrated capabilities to evaluate energy savings opportunities for steam generation and major energy using systems, including, but not limited to:

(i) Boiler combustion management.

(ii) Boiler thermal energy recovery, including

(A) Conventional feed water economizer,

(B) Conventional combustion air preheater, and

(C) Condensing economizer.

(iii) Boiler blowdown thermal energy recovery.

(iv) Primary energy resource selection, including

(A) Fuel (primary energy source) switching, and

(B) Applied steam energy versus direct-fired energy versus electricity.

(v) Insulation issues.

(vi) Steam trap and steam leak management.

(vii) Condensate recovery.

(viii) Steam end-use management.

(2) Capabilities and knowledge includes, but is not limited to:

(i) Background, experience, and recognized abilities to perform the assessment activities, data analysis, and report preparation.

(ii) Familiarity with operating and maintenance practices for steam or process heating systems.

(iii) Additional potential steam system improvement opportunities including improving steam turbine operations and reducing steam demand.

(iv) Additional process heating system opportunities including effective utilization of waste heat and use of proper process heating methods.

(v) Boiler-steam turbine cogeneration systems.

(vi) Industry specific steam end-use systems.

Regulated gas stream means an offgas stream that is routed to a boiler for the purpose of achieving compliance with a standard under another subpart of this part or part 60, part 61, or part 65 of this chapter.

Residential boiler means a boiler used to provide heat and/or hot water and/or as part of a residential combined heat and power system. This definition includes boilers located at an institutional facility (*e.g.,* university campus, military base, church grounds) or commercial/industrial facility (*e.g.,* farm) used primarily to provide heat and/or hot water for:

(1) A dwelling containing four or fewer families, or

(2) A single unit residence dwelling that has since been converted or subdivided into condominiums or apartments.

Residual oil means crude oil, fuel oil that does not comply with the specifications under the definition of distillate oil, and all fuel oil numbers 4, 5, and 6, as defined by the American Society of Testing and Materials in ASTM D396–10 (incorporated by reference, see § 63.14(b)).

* * * * *

Seasonal boiler means a boiler that undergoes a shutdown for a period of at least 7 consecutive months (or 210 consecutive days) each 12-month period due to seasonal conditions, except for periodic testing. Periodic testing shall not exceed a combined total of 15 days during the 7-month shutdown. This definition only applies to boilers that would otherwise be included in the biomass subcategory or the oil subcategory.

Shutdown means the cessation of operation of a boiler for any purpose. Shutdown begins either when none of the steam or heat from the boiler is supplied for heating and/or producing electricity, or for any other purpose, or at the point of no fuel being fired in the boiler, whichever is earlier. Shutdown ends when there is no steam and no heat being supplied and no fuel being fired in the boiler.

Solid fossil fuel includes, but is not limited to, coal, coke, petroleum coke, and tire-derived fuel.

Solid fuel means any solid fossil fuel or biomass or bio-based solid fuel.

Startup means either the first-ever firing of fuel in a boiler for the purpose of supplying steam or heat for heating and/or producing electricity, or for any other purpose, or the firing of fuel in a boiler after a shutdown event for any purpose. Startup ends when any of the steam or heat from the boiler is supplied for heating and/or producing electricity, or for any other purpose.

Temporary boiler means any gaseous or liquid fuel boiler that is designed to, and is capable of, being carried or moved from one location to another by means of, for example, wheels, skids, carrying handles, dollies, trailers, or platforms. A boiler is not a temporary boiler if any one of the following conditions exists:

(1) The equipment is attached to a foundation.

(2) The boiler or a replacement remains at a location within the facility and performs the same or similar function for more than 12 consecutive months, unless the regulatory agency approves an extension. An extension may be granted by the regulating agency upon petition by the owner or operator of a unit specifying the basis for such a request. Any temporary boiler that replaces a temporary boiler at a location within the facility and performs the same or similar function will be included in calculating the consecutive time period unless there is a gap in operation of 12 months or more.

(3) The equipment is located at a seasonal facility and operates during the full annual operating period of the seasonal facility, remains at the facility for at least 2 years, and operates at that facility for at least 3 months each year.

(4) The equipment is moved from one location to another within the facility but continues to perform the same or similar function and serve the same electricity, steam, and/or hot water system in an attempt to circumvent the residence time requirements of this definition.

Tune-up means adjustments made to a boiler in accordance with the procedures outlined in § 63.11223(b).

Vegetable oil means oils extracted from vegetation.

Voluntary Consensus Standards (VCS) mean technical standards (*e.g.,* materials specifications, test methods, sampling procedures, business practices) developed or adopted by one or more voluntary consensus bodies. EPA/Office of Air Quality Planning and Standards, by precedent, has only used VCS that are written in English. Examples of VCS bodies are: American Society of Testing and Materials (ASTM 100 Barr Harbor Drive, P.O. Box CB700, West Conshohocken, Pennsylvania 19428–B2959, (800) 262–1373, *http://www.astm.org*), American Society of Mechanical Engineers (ASME ASME, Three Park Avenue, New York, NY 10016–5990, (800) 843–2763, *http://www.asme.org*), International Standards Organization (ISO 1, ch. de la Voie-Creuse, Case postale 56, CH–1211 Geneva 20, Switzerland, +41 22 749 01 11, *http://www.iso.org/iso/home.htm*), Standards Australia (AS Level 10, The Exchange Centre, 20 Bridge Street, Sydney, GPO Box 476, Sydney NSW 2001, + 61 2 9237 6171 *http://www.stadards.org.au*), British Standards Institution (BSI, 389 Chiswick High Road, London, W4 4AL, United Kingdom, +44 (0)20 8996 9001, *http://www.bsigroup.com*), Canadian Standards Association (CSA 5060 Spectrum Way, Suite 100, Mississauga, Ontario L4W 5N6, Canada, 800–463–6727, *http://www.csa.ca*), European Committee for Standardization (CEN CENELEC Management Centre Avenue Marnix 17 B–1000 Brussels, Belgium +32 2 550 08 11, *http://www.cen.eu/cen*), and German Engineering Standards (VDI VDI Guidelines Department, P.O. Box 10 11 39 40002, Duesseldorf, Germany, +49 211 6214–230, *http://www.vdi.eu*). The types of standards that are not considered VCS are standards developed by: the United States, *e.g.,* California (CARB) and Texas (TCEQ); industry groups, such as American Petroleum Institute (API), Gas Processors Association (GPA), and Gas Research Institute (GRI); and other branches of the U.S. government, *e.g.,* Department of Defense (DOD) and Department of Transportation (DOT). This does not preclude EPA from using standards developed by groups that are not VCS bodies within their rule. When this occurs, EPA has done searches and reviews for VCS equivalent to these non-EPA methods.

Waste heat boiler means a device that recovers normally unused energy (*i.e.,* hot exhaust gas) and converts it to usable heat. Waste heat boilers are also referred to as heat recovery steam generators. Waste heat boilers are heat exchangers generating steam from incoming hot exhaust gas from an industrial (*e.g.,* thermal oxidizer, kiln, furnace) or power (*e.g.,* combustion turbine, engine) equipment. Duct burners are sometimes used to increase the temperature of the incoming hot exhaust gas.

Wet scrubber means any add-on air pollution control device that mixes an aqueous stream or slurry with the exhaust gases from a boiler to control emissions of particulate matter or to absorb and neutralize acid gases, such as hydrogen chloride. A wet scrubber creates an aqueous stream or slurry as a byproduct of the emissions control process.

* * * * *

■ 21. Table 1 to subpart JJJJJJ is revised to read as follows:

As stated in § 63.11201, you must comply with the following applicable emission limits:

TABLE 1 TO SUBPART JJJJJJ OF PART 63—EMISSION LIMITS

If your boiler is in this subcategory . . .	For the following pollutants . . .	You must achieve less than or equal to the following emission limits, except during periods of startup and shutdown . . .
1. New coal-fired boilers with heat input capacity of 30 million British thermal units per hour (MMBtu/hr) or greater that do not meet the definition of limited-use boiler.	a. PM (Filterable)	3.0E–02 pounds(lb) per million British thermal units (MMBtu) of heat input.
	b. Mercury	2.2E–05 lb per MMBtu of heat input.
	c. CO	420 parts per million (ppm) by volume on a dry basis corrected to 3 percent oxygen (3-run average or 10-day rolling average).
2. New coal-fired boilers with heat input capacity of between 10 and 30 MMBtu/hr that do not meet the definition of limited-use boiler.	a. PM (Filterable)	4.2E–01 lb per MMBtu of heat input.
	b. Mercury	2.2E–05 lb per MMBtu of heat input.
	c. CO	420 ppm by volume on a dry basis corrected to 3 percent oxygen (3-run average or 10-day rolling average).

TABLE 1 TO SUBPART JJJJJJ OF PART 63—EMISSION LIMITS—Continued

If your boiler is in this subcategory . . .	For the following pollutants . . .	You must achieve less than or equal to the following emission limits, except during periods of startup and shutdown . . .
3. New biomass-fired boilers with heat input capacity of 30 MMBtu/hr or greater that do not meet the definition of seasonal boiler or limited-use boiler.	PM (Filterable)	3.0E–02 lb per MMBtu of heat input.
4. New biomass fired boilers with heat input capacity of between 10 and 30 MMBtu/hr that do not meet the definition of seasonal boiler or limited-use boiler.	PM (Filterable)	7.0E–02 lb per MMBtu of heat input.
5. New oil-fired boilers with heat input capacity of 10 MMBtu/hr or greater that do not meet the definition of seasonal boiler or limited-use boiler.	PM (Filterable)	3.0E–02 lb per MMBtu of heat input.
6. Existing coal-fired boilers with heat input capacity of 10 MMBtu/hr or greater that do not meet the definition of limited-use boiler.	a. Mercury b. CO	2.2E–05 lb per MMBtu of heat input. 420 ppm by volume on a dry basis corrected to 3 percent oxygen.

■ 22. Table 2 to subpart JJJJJJ is revised to read as follows:

As stated in § 63.11201, you must comply with the following applicable work practice standards, emission reduction measures, and management practices:

TABLE 2 TO SUBPART JJJJJJ OF PART 63—WORK PRACTICE STANDARDS, EMISSION REDUCTION MEASURES, AND MANAGEMENT PRACTICES

If your boiler is in this subcategory . . .	You must meet the following . . .
1. Existing or new coal-fired, new biomass-fired, or new oil-fired boilers (units with heat input capacity of 10 MMBtu/hr or greater).	Minimize the boiler's startup and shutdown periods and conduct startups and shutdowns according to the manufacturer's recommended procedures. If manufacturer's recommended procedures are not available, you must follow recommended procedures for a unit of similar design for which manufacturer's recommended procedures are available.
2. Existing coal-fired boilers with heat input capacity of less than 10 MMBtu/hr that do not meet the definition of limited-use boiler, or use an oxygen trim system that maintains an optimum air-to-fuel ratio.	Conduct an initial tune-up as specified in § 63.11214, and conduct a tune-up of the boiler biennially as specified in § 63.11223.
3. New coal-fired boilers with heat input capacity of less than 10 MMBtu/hr that do not meet the definition of limited-use boiler, or use an oxygen trim system that maintains an optimum air-to-fuel ratio.	Conduct a tune-up of the boiler biennially as specified in § 63.11223.
4. Existing oil-fired boilers with heat input capacity greater than 5 MMBtu/hr that do not meet the definition of seasonal boiler or limited-use boiler, or use an oxygen trim system that maintains an optimum air-to-fuel ratio.	Conduct an initial tune-up as specified in § 63.11214, and conduct a tune-up of the boiler biennially as specified in § 63.11223.
5. New oil-fired boilers with heat input capacity greater than 5 MMBtu/hr that do not meet the definition of seasonal boiler or limited-use boiler, or use an oxygen trim system that maintains an optimum air-to-fuel ratio.	Conduct a tune-up of the boiler biennially as specified in § 63.11223.
6. Existing biomass-fired boilers that do not meet the definition of seasonal boiler or limited-use boiler, or use an oxygen trim system that maintains an optimum air-to-fuel ratio.	Conduct an initial tune-up as specified in § 63.11214, and conduct a tune-up of the boiler biennially as specified in § 63.11223.
7. New biomass-fired boilers that do not meet the definition of seasonal boiler or limited-use boiler, or use an oxygen trim system that maintains an optimum air-to-fuel ratio.	Conduct a tune-up of the boiler biennially as specified in § 63.11223.
8. Existing seasonal boilers	Conduct an initial tune-up as specified in § 63.11214, and conduct a tune-up of the boiler every 5 years as specified in § 63.11223.
9. New seasonal boilers	Conduct a tune-up of the boiler every 5 years as specified in § 63.11223.
10. Existing limited-use boilers	Conduct an initial tune-up as specified in § 63.11214, and conduct a tune-up of the boiler every 5 years as specified in § 63.11223.
11. New limited-use boilers	Conduct a tune-up of the boiler every 5 years as specified in § 63.11223.
12. Existing oil-fired boilers with heat input capacity of equal to or less than 5 MMBtu/hr.	Conduct an initial tune-up as specified in § 63.11214, and conduct a tune-up of the boiler every 5 years as specified in § 63.11223.
13. New oil-fired boilers with heat input capacity of equal to or less than 5 MMBtu/hr.	Conduct a tune-up of the boiler every 5 years as specified in § 63.11223.

TABLE 2 TO SUBPART JJJJJJ OF PART 63—WORK PRACTICE STANDARDS, EMISSION REDUCTION MEASURES, AND MANAGEMENT PRACTICES—Continued

If your boiler is in this subcategory . . .	You must meet the following . . .
14. Existing coal-fired, biomass-fired, or oil-fired boilers with an oxygen trim system that maintains an optimum air-to-fuel ratio that would otherwise be subject to a biennial tune-up.	Conduct an initial tune-up as specified in § 63.11214, and conduct a tune-up of the boiler every 5 years as specified in § 63.11223.
15. New coal-fired, biomass-fired, or oil-fired boilers with an oxygen trim system that maintains an optimum air-to-fuel ratio that would otherwise be subject to a biennial tune-up.	Conduct a tune-up of the boiler every 5 years as specified in § 63.11223.
16. Existing coal-fired, biomass-fired, or oil-fired boilers (units with heat input capacity of 10 MMBtu/hr and greater), not including limited-use boilers.	Must have a one-time energy assessment performed by a qualified energy assessor. An energy assessment completed on or after January 1, 2008, that meets or is amended to meet the energy assessment requirements in this table satisfies the energy assessment requirement. Energy assessor approval and qualification requirements are waived in instances where past or amended energy assessments are used to meet the energy assessment requirements. A facility that operates under an energy management program compatible with ISO 50001 that includes the affected units also satisfies the energy assessment requirement. The energy assessment must include the following with extent of the evaluation for items (1) to (4) appropriate for the on-site technical hours listed in § 63.11237: (1) A visual inspection of the boiler system, (2) An evaluation of operating characteristics of the affected boiler systems, specifications of energy use systems, operating and maintenance procedures, and unusual operating constraints, (3) An inventory of major energy use systems consuming energy from affected boiler(s) and which are under control of the boiler owner or operator, (4) A review of available architectural and engineering plans, facility operation and maintenance procedures and logs, and fuel usage, (5) A list of major energy conservation measures that are within the facility's control, (6) A list of the energy savings potential of the energy conservation measures identified, and (7) A comprehensive report detailing the ways to improve efficiency, the cost of specific improvements, benefits, and the time frame for recouping those investments.

■ 23. Table 3 to subpart JJJJJJ is revised to read as follows:

As stated in § 63.11201, you must comply with the applicable operating limits:

TABLE 3 TO SUBPART JJJJJJ OF PART 63—OPERATING LIMITS FOR BOILERS WITH EMISSION LIMITS

If you demonstrate compliance with applicable emission limits using . . .	You must meet these operating limits except during periods of startup and shutdown . . .
1. Fabric filter control	a. Maintain opacity to less than or equal to 10 percent opacity (daily block average); OR b. Install and operate a bag leak detection system according to § 63.11224 and operate the fabric filter such that the bag leak detection system alarm does not sound more than 5 percent of the operating time during each 6-month period.
2. Electrostatic precipitator control	a. Maintain opacity to less than or equal to 10 percent opacity (daily block average); OR b. Maintain the 30-day rolling average total secondary electric power of the electrostatic precipitator at or above the minimum total secondary electric power as defined in § 63.11237.
3. Wet scrubber control	Maintain the 30-day rolling average pressure drop across the wet scrubber at or above the minimum scrubber pressure drop as defined in § 63.11237 and the 30-day rolling average liquid flow rate at or above the minimum scrubber liquid flow rate as defined in § 63.11237.
4. Dry sorbent or activated carbon injection control.	Maintain the 30-day rolling average sorbent or activated carbon injection rate at or above the minimum sorbent injection rate or minimum activated carbon injection rate as defined in § 63.11237. When your boiler operates at lower loads, multiply your sorbent or activated carbon injection rate by the load fraction (*e.g.,* actual heat input divided by the heat input during the performance stack test; for 50 percent load, multiply the injection rate operating limit by 0.5).
5. Any other add-on air pollution control type.	This option is for boilers that operate dry control systems. Boilers must maintain opacity to less than or equal to 10 percent opacity (daily block average).
6. Fuel analysis	Maintain the fuel type or fuel mixture (annual average) such that the mercury emission rate calculated according to § 63.11211(c) are less than the applicable emission limit for mercury.
7. Performance stack testing	For boilers that demonstrate compliance with a performance stack test, maintain the operating load of each unit such that it does not exceed 110 percent of the average operating load recorded during the most recent performance stack test.
8. Oxygen analyzer system	For boilers subject to a CO emission limit that demonstrate compliance with an oxygen analyzer system as specified in § 63.11224(a), maintain the 30-day rolling average oxygen level at or above the minimum oxygen level as defined in § 63.11237. This requirement does not apply to units that install an oxygen trim system since these units will set the trim system to the level specified in § 63.11224(a)(7).

* * * * *

■ 24. Table 6 to subpart JJJJJJ is revised to read as follows:

As stated in § 63.11211, you must comply with the following requirements for establishing operating limits:

TABLE 6 TO SUBPART JJJJJJ OF PART 63—ESTABLISHING OPERATING LIMITS

If you have an applicable emission limit for . . .	And your operating limits are based on . . .	You must . . .	Using . . .	According to the following requirements
1. PM or mercury ..	a. Wet scrubber operating parameters.	Establish site-specific minimum scrubber pressure drop and minimum scrubber liquid flow rate operating limits according to § 63.11211(b).	Data from the pressure drop and liquid flow rate monitors and the PM or mercury performance stack tests.	(a) You must collect pressure drop and liquid flow rate data every 15 minutes during the entire period of the performance stack tests; (b) Determine the average pressure drop and liquid flow rate for each individual test run in the three-run performance stack test by computing the average of all the 15-minute readings taken during each test run.
	b. Electrostatic precipitator operating parameters.	Establish a site-specific minimum total secondary electric power operating limit according to § 63.11211(b).	Data from the secondary electric power monitors and the PM or mercury performance stack tests.	(a) You must collect secondary electric power data every 15 minutes during the entire period of the performance stack tests; (b) Determine the average total secondary electric power for each individual test run in the three-run performance stack test by computing the average of all the 15-minute readings taken during each test run.
2. Mercury	Dry sorbent or activated carbon injection rate operating parameters.	Establish a site-specific minimum sorbent or activated carbon injection rate operating limit according to § 63.11211(b).	Data from the sorbent or activated carbon injection rate monitors and the mercury performance stack tests.	(a) You must collect sorbent or activated carbon injection rate data every 15 minutes during the entire period of the performance stack tests; (b) Determine the average sorbent or activated carbon injection rate for each individual test run in the three-run performance stack test by computing the average of all the 15-minute readings taken during each test run. (c) When your unit operates at lower loads, multiply your sorbent or activated carbon injection rate by the load fraction (e.g., actual heat input divided by heat input during performance stack test, for 50 percent load, multiply the injection rate operating limit by 0.5) to determine the required injection rate.
3. CO	Oxygen	Establish a unit-specific limit for minimum oxygen level.	Data from the oxygen analyzer system specified in § 63.11224(a).	(a) You must collect oxygen data every 15 minutes during the entire period of the performance stack tests; (b) Determine the average hourly oxygen concentration for each individual test run in the three-run performance stack test by computing the average of all the 15-minute readings taken during each test run.
4. Any pollutant for which compliance is demonstrated by a performance stack test.	Boiler operating load.	Establish a unit-specific limit for maximum operating load according to § 63.11212(c).	Data from the operating load monitors (fuel feed monitors or steam generation monitors).	(a) You must collect operating load data (fuel feed rate or steam generation data) every 15 minutes during the entire period of the performance test. (b) Determine the average operating load by computing the hourly averages using all of the 15-minute readings taken during each performance test. (c) Determine the average of the three test run averages during the performance test, and multiply this by 1.1 (110 percent) as your operating limit.

■ 25. Table 7 to subpart JJJJJJ is revised to read as follows:

As stated in § 63.11222, you must show continuous compliance with the emission limitations for each boiler according to the following:

TABLE 7 TO SUBPART JJJJJJ OF PART 63—DEMONSTRATING CONTINUOUS COMPLIANCE

If you must meet the following operating limits . . .	You must demonstrate continuous compliance by . . .
1. Opacity	a. Collecting the opacity monitoring system data according to § 63.11224(e) and § 63.11221; and b. Reducing the opacity monitoring data to 6-minute averages; and c. Maintaining opacity to less than or equal to 10 percent (daily block average).
2. Fabric Filter Bag Leak Detection Operation	Installing and operating a bag leak detection system according to § 63.11224(f) and operating the fabric filter such that the requirements in § 63.11222(a)(4) are met.
3. Wet Scrubber Pressure Drop and Liquid Flow Rate.	a. Collecting the pressure drop and liquid flow rate monitoring system data according to §§ 63.11224 and 63.11221; and b. Reducing the data to 30-day rolling averages; and c. Maintaining the 30-day rolling average pressure drop and liquid flow rate at or above the minimum pressure drop and minimum liquid flow rate according to § 63.11211.
4. Dry Scrubber Sorbent or Activated Carbon Injection Rate.	a. Collecting the sorbent or activated carbon injection rate monitoring system data for the dry scrubber according to §§ 63.11224 and 63.11221; and b. Reducing the data to 30-day rolling averages; and c. Maintaining the 30-day rolling average sorbent or activated carbon injection rate at or above the minimum sorbent or activated carbon injection rate according to § 63.11211.
5. Electrostatic Precipitator Total Secondary Electric Power.	a. Collecting the total secondary electric power monitoring system data for the electrostatic precipitator according to §§ 63.11224 and 63.11221; and b. Reducing the data to 30-day rolling averages; and c. Maintaining the 30-day rolling average total secondary electric power at or above the minimum total secondary electric power according to § 63.11211.
6. Fuel Pollutant Content	a. Only burning the fuel types and fuel mixtures used to demonstrate compliance with the applicable emission limit according to § 63.11213 as applicable; and b. Keeping monthly records of fuel use according to §§ 63.11222(a)(2) and 63.11225(b)(4).
7. Oxygen content	a. Continuously monitoring the oxygen content of flue gas according to § 63.11224 (This requirement does not apply to units that install an oxygen trim system since these units will set the trim system to the level specified in § 63.11224(a)(7)); and b. Reducing the data to 30-day rolling averages; and c. Maintaining the 30-day rolling average oxygen content at or above the minimum oxygen level established during the most recent CO performance test.
8. CO emissions	a. Continuously monitoring the CO concentration in the combustion exhaust according to §§ 63.11224 and 63.11221; and b. Correcting the data to 3 percent oxygen, and reducing the data to 1-hour averages; and c. Reducing the data from the hourly averages to 10-day rolling averages; and d. Maintaining the 10-day rolling average CO concentration at or below the applicable emission limit in Table 1 to this subpart.
9. Boiler operating load	a. Collecting operating load data (fuel feed rate or steam generation data) every 15 minutes; and b. Reducing the data to 30-day rolling averages; and c. Maintaining the 30-day rolling average at or below the operating limit established during the performance test according to § 63.11212(c) and Table 6 to this subpart.

■ 26. Table 8 to subpart JJJJJJ is amended by:

■ a. Revising the entry for ''§ 63.9''.

■ b. Revising the entry for ''§ 63.10(e) and (f)''.

■ c. Adding an entry for ''§ 63.10(f)''.

The revisions read as follows:

* * * * *

TABLE 8 TO SUBPART JJJJJJ OF PART 63—APPLICABILITY OF GENERAL PROVISIONS TO SUBPART JJJJJJ

General provisions cite	Subject	Does it apply?
*	* * *	* * *
§ 63.9	Notification Requirements	Yes, excluding the information required in § 63.9(h)(2)(i)(B), (D), (E) and (F). See § 63.11225.
*	* * *	* * *
§ 63.10(e)	Additional reporting requirements for sources with CMS	Yes.
§ 63.10(f)	Waiver of recordkeeping or reporting requirements	Yes.
*	* * *	* * *

[FR Doc. 2012–31645 Filed 1–31–13; 8:45 am]

BILLING CODE 6560–50–P

FEDERAL REGISTER

Vol. 78 Friday,

No. 22 February 1, 2013

Part III

Department of Energy

Federal Energy Regulatory Commission

18 CFR Part 35

Small Generator Interconnection Agreements and Procedures; Proposed Rule

DEPARTMENT OF ENERGY

Federal Energy Regulatory Commission

18 CFR Part 35

[Docket No. RM13–2–000]

Small Generator Interconnection Agreements and Procedures

AGENCY: Federal Energy Regulatory Commission, DOE.

ACTION: Notice of proposed rulemaking.

SUMMARY: The Federal Energy Regulatory Commission (Commission) is proposing to revise the *pro forma* Small Generator Interconnection Procedures (SGIP) and *pro forma* Small Generator Interconnection Agreement (SGIA) originally set forth in Order No. 2006. The *pro forma* SGIP and SGIA establish the terms and conditions under which public utilities must provide interconnection service to Small Generating Facilities of no more than 20 megawatts (MW). In this Notice of Proposed Rulemaking (NOPR), the Commission proposes to modify the *pro forma* SGIP to: (1) Incorporate provisions that would provide an Interconnection Customer with the option of requesting from the Transmission Provider a pre-application report providing existing information about system conditions at a possible Point of Interconnection; (2) revise the 2 MW threshold for participation in the Fast Track Process included in section 2 of the *pro forma* SGIP; (3) revise the customer options meeting and the supplemental review following failure of the Fast Track screens so that the supplemental review is performed at the discretion of the Interconnection Customer and includes minimum load and other screens to determine if a Small Generating Facility may be interconnected safely and reliably; and (4) revise the *pro forma* SGIP Facilities Study Agreement to allow the Interconnection Customer the opportunity to provide written comments to the Transmission Provider on the upgrades required for interconnection. The Commission also proposes to clarify or correct certain sections of the *pro forma* SGIP and SGIA. The proposed reforms are intended to ensure that the time and cost to process small generator interconnect requests will be just and reasonable and not unduly discriminatory. To facilitate discussion of the proposed reforms, the Commission intends to hold a workshop at which stakeholders may discuss the proposals made in this NOPR. The workshop is to be held before the end of the comment period.

DATES: Comments are due June 3, 2013.

ADDRESSES: Comments, identified by docket number, may be filed in the following ways:

- Electronic Filing through *http://www.ferc.gov*. Documents created electronically using word processing software should be filed in native applications or print-to-PDF format and not in a scanned format.
- Mail/Hand Delivery: Those unable to file electronically may mail or hand-deliver comments to: Federal Energy Regulatory Commission, Secretary of the Commission, 888 First Street NE., Washington, DC 20426.

Instructions: For detailed instructions on submitting comments and additional information on the rulemaking process, see the Comment Procedures Section of this document.

FOR FURTHER INFORMATION CONTACT:

Leslie Kerr (Technical Information), Office of Energy Policy and Innovation, Federal Energy Regulatory Commission, 888 First Street NE., Washington, DC 20426, (202) 502–8540, *Leslie.Kerr@ferc.gov*.

Monica Taba (Technical Information), Office of Electric Reliability, Federal Energy Regulatory Commission, 888 First Street NE., Washington, DC 20426, (202) 502–6789, *Monica.Taba@ferc.gov*.

Elizabeth Arnold (Legal Information), Office of the General Counsel, Federal Energy Regulatory Commission, 888 First Street NE., Washington, DC 20426, (202) 502–8687, *Elizabeth.Arnold@ferc.gov*.

SUPPLEMENTARY INFORMATION:

Notice of Proposed Rulemaking

Table of Contents

	Paragraph Nos.
I. Introduction	1
II. Background	6
A. Order No. 2006	6
B. Solar Energy Industries Association Petition	12
III. Need for Reform	18
IV. Proposed Reforms	25
A. Pre-Application Report	26
B. Threshold for Participation in the Fast Track Process	30
C. Customer Options Meeting and Supplemental Review	33
D. Review of Required Upgrades	41
E. Other Revisions	45
V. Workshop	47
VI. Compliance Filings	50
VII. Procedural Matters	54
VIII. Information Collection Statement	56
IX. Environmental Analysis	60
X. Regulatory Flexibility Act	61
XI. Comment Procedures	63
XII. Document Availability	67

Appendix A: List of Short Names of Commenters on the SEIA Petition (Docket No. RM12–10–000) and the Technical Conference (Docket No. AD12–17–000).

Appendix B: Proposed Flow Chart for Interconnecting a Certified Small Generating Facility Using the ''Fast Track Process.''

Appendix C: Proposed Revisions to the *Pro Forma* SGIP.

Appendix D: Proposed Revisions to the *Pro Forma* SGIA.

Notice of Proposed Rulemaking

January 17, 2013.

I. Introduction

1. The Commission is proposing to revise the *pro forma* Small Generator Interconnection Procedures (SGIP) and *pro forma* Small Generator

Interconnection Agreement (SGIA) originally set forth in Order No. 2006.[1] The *pro forma* SGIP and SGIA establish the terms and conditions under which public utilities [2] must provide interconnection service to Small Generating Facilities [3] of no more than 20 megawatts (MW).[4]

2. Market changes, including the growth of small generator interconnection requests and the growth in solar photovoltaic (PV) installations, driven in part by state renewable energy goals and policies, necessitate a reevaluation of the SGIP and SGIA to ensure that they continue to facilitate Commission-jurisdictional interconnections in a just and reasonable and not unduly discriminatory manner.[5] We note that the Commission has previously reviewed the Large Generator Interconnection Procedures (LGIP) after significant increases in large generator interconnection requests, mainly from wind generators, led to challenges in processing interconnection requests on a timely basis.[6] The Commission proposes the reforms herein in the belief that failure to do so now could lead to unnecessary challenges for Small Generating Facilities in the future.[7]

3. Specifically, the Commission proposes to modify the *pro forma* SGIP to: (1) Incorporate provisions that would provide an Interconnection Customer with the option of requesting from the Transmission Provider a pre-application report providing existing information about system conditions at a possible Point of Interconnection; (2) revise the 2 MW threshold for participation in the Fast Track Process included in section 2 of the *pro forma* SGIP; (3) revise the customer options meeting and the supplemental review following failure of the Fast Track screens so that the supplemental review is performed at the discretion of the Interconnection Customer and includes minimum load and other screens to determine if a Small Generating Facility may be interconnected safely and reliably; and (4) revise the *pro forma* SGIP Facilities Study Agreement to allow the Interconnection Customer the opportunity to provide written comments on the upgrades required for interconnection. The Commission also proposes to clarify or correct certain sections of the *pro forma* SGIP and SGIA.

4. The proposals set forth in this Notice of Proposed Rulemaking (NOPR) are intended to ensure that the time and cost to process small generator interconnection requests will be just and reasonable and not unduly discriminatory as sections 205 and 206 of the FPA require.[8] We expect the proposed reforms will reduce the time and cost to process small generator interconnection requests for Interconnection Customers and Transmission Providers, maintain reliability, increase energy supply, and remove barriers to the development of new energy sources. While the Commission proposes that all public utilities will be required to amend [9] their Open Access Transmission Tariffs (OATT) to include a modified *pro forma* SGIP and SGIA,[10] these reforms will likely impact public utility Transmission Providers with a significant penetration of distributed resources and a larger number of small generator interconnection requests.

5. The Commission believes there is sufficient justification for proposing the reforms discussed below. In light of the technical nature of these reforms, the Commission is directing its staff to hold a workshop at which stakeholders may discuss possible refinements to the proposals made in this NOPR before the end of the comment period.[11] The Commission encourages interested stakeholders to participate actively in the workshop to assist the Commission in developing any appropriate improvements to the proposed reforms to the SGIP and SGIA.

II. Background

A. Order No. 2006

6. In Order No. 2006, the Commission established a *pro forma* SGIP and SGIA for the interconnection of generation resources no larger than 20 MW. The *pro forma* SGIP describes how an Interconnection Customer's interconnection request (application) should be evaluated. The *pro forma* SGIP includes three alternative procedures for evaluating an interconnection request. They are the Study Process, which can be used by any generating facility with a capacity no larger than 20 MW, and two procedures that use ten technical screens to quickly identify safety or reliability issues associated with proposed interconnections: (1) The Fast Track Process for certified [12] Small Generating Facilities no larger than 2 MW; and (2) the 10 kW Inverter Process for certified inverter-based [13] Small

[1] *Standardization of Small Generator Interconnection Agreements and Procedures,* Order No. 2006, FERC Stats. & Regs. ¶ 31,180, *order on reh 'g,* Order No. 2006–A, FERC Stats. & Regs. ¶ 31,196 (2005), *order on clarification,* Order No. 2006–B, FERC Stats. & Regs. ¶ 31,221 (2006) (Order No. 2006).

[2] For purposes of this Proposed Rule, a public utility is a utility that owns, controls, or operates facilities used for transmitting electric energy in interstate commerce, as defined by the Federal Power Act (FPA). *See* 16 U.S.C. 824(e) (2006). A non-public utility that seeks voluntary compliance with the reciprocity condition of an Open Access Transmission Tariff (OATT) may satisfy that condition by filing an OATT, which includes the *pro forma* SGIP and the *pro forma* SGIA.

[3] Capitalized terms used in this NOPR have the meanings specified in the Glossaries of Terms or the text of the SGIP or SGIA. Small Generating Facility means the device for which the Interconnection Customer has requested interconnection. The owner of the Small Generating Facility is the Interconnection Customer. The utility entity with which the Small Generating Facility is interconnecting is the Transmission Provider. A Small Generating Facility is a device used for the production of electricity having a capacity of no more than 20 MW. The interconnection process formally begins with the Interconnection Customer submitting an application for interconnection, called an Interconnection Request, to the Transmission Provider.

[4] The *pro forma* SGIP and SGIA are used by a public utility to interconnect a Small Generating Facility with the utility's transmission facilities or with its jurisdictional distribution facilities for the purpose of selling electric energy at wholesale in interstate commerce.

[5] Although not controlling as to interconnections subject to state jurisdiction, the Commission notes that one of the intended purposes for the small generator interconnection regulations set forth in Order No. 2006 was to serve as a guide for state interconnection procedures. *See* Order No. 2006, FERC Stats. & Regs. ¶ 31,180 at P 4, 8.

[6] Docket No. AD08–2–000 explored methods to address then current queue management challenges in a manner consistent with *Standardization of Generator Interconnection Agreements and Procedures,* Order No. 2003, FERC Stats. & Regs. ¶ 31,146 (2003), *order on reh'g,* Order No. 2003–A, FERC Stats. & Regs. ¶ 31,160, *order on reh'g,* Order No. 2003–B, FERC Stats. & Regs. ¶ 31,171 (2004), *order on reh'g,* Order No. 2003–C, FERC Stats. & Regs. ¶ 31,190 (2005), *aff'd sub nom. Nat'l Ass'n of Regulatory Util. Comm'rs* v. *FERC,* 475 F.3d 1277 (D.C. Cir. 2007), *cert. denied,* 552 U.S. 1230 (2008) (Order No. 2003).

[7] The Commission routinely evaluates the effectiveness of its regulations and policies in light of changing industry conditions to determine if changes in these regulations and policies are necessary. *See, e.g., Integration of Variable Energy Resources,* Order No. 764, 77 FR 41482 (July 13, 2012) FERC Stats. & Regs. ¶ 31,331 (2012).

[8] 16 U.S.C. 824a and 824b (2006).

[9] Compliance procedures are discussed in Part VI below.

[10] *See* proposed revisions to the *pro forma* SGIP in Appendix C and proposed revisions to the *pro forma* SGIA in Appendix D.

[11] Notice of the date and time of the workshop will be published separately in the **Federal Register**.

[12] *See* Attachments 3 and 4 of the Order No. 2006, FERC Stats. & Regs. ¶ 31,180 *pro forma* SGIP, which specify the codes, standards, and certification requirements that Small Generating Facilities must meet.

[13] An inverter is a device that converts the direct current (DC) voltage and current of a DC generator to alternating voltage and current. For example, the output of a solar panel is DC. The solar panel's output must be converted by an inverter to alternating current (AC) before it can be interconnected with a utility's AC electric system.

Generating Facilities no larger than 10 kW.

7. The Study Process in section 3 of the *pro forma* SGIP is used to evaluate small generator interconnection requests that do not qualify for either the Fast Track Process or the 10 kW Inverter Process. The Study Process is similar to the process under the LGIP set forth in Order No. 2003. The Study Process normally consists of a scoping meeting, a feasibility study, a system impact study, and a facilities study. These studies identify any adverse system impacts [14] that must be addressed before the Small Generating Facility may be interconnected and any equipment modifications required to accommodate the interconnection. Once the Interconnection Customer agrees to fund any needed upgrades, an SGIA is executed that, among other things, formalizes responsibility for construction and payment for interconnection facilities and upgrades.[15]

8. Under the current Fast Track Process, in place of the scoping meeting and three interconnection studies performed under the Study Process, technical screens are used to quickly identify reliability or safety issues. If the proposed interconnection passes the screens, the Transmission Provider offers the Interconnection Customer an SGIA without further study. If the proposed interconnection fails the screens, but the Transmission Provider determines that the Small Generating Facility may be interconnected without affecting safety and reliability, the Transmission Provider provides the Interconnection Customer with an SGIA. However, if the Transmission Provider does not or cannot determine that the Small Generating Facility may be interconnected without affecting safety and reliability, the Transmission Provider offers the Interconnection Customer the opportunity to attend a customer options meeting to discuss how to proceed. In that meeting, the Transmission Provider must: (1) Offer to perform facility modifications or minor modifications to the Transmission Provider's system (*e.g.,* changing meters, fuses, relay settings) and provide a non-binding good faith estimate of the cost to make such modifications; (2) offer to perform a supplemental review if the Transmission Provider concludes that the supplemental review might determine that the Small Generating Facility could continue to qualify for interconnection pursuant to the Fast Track Process, paid for by the Interconnection Customer, and provide a non-binding good faith estimate of the cost of that review; or (3) obtain the Interconnection Customer's agreement to continue evaluating the interconnection request under the Study Process. If the Transmission Provider determines in the supplemental review that the Small Generating Facility can be interconnected safely and reliably and the Interconnection Customer agrees to pay for any upgrades called for in the supplemental review, the Transmission Provider and the Interconnection Customer execute an SGIA. If, after the supplemental review, the Transmission Provider still is unable to determine that the proposed interconnection would not degrade the safety and reliability of its electric system, the Interconnection Request is evaluated using the Study Process.

9. The 10 kW Inverter Process is available for the interconnection of certified inverter-based generators no larger than 10 kW. The 10 kW Inverter Process includes a simplified application form, interconnection procedures, and a brief set of terms and conditions (rather than a separate interconnection agreement). The 10 kW Inverter Process uses the same technical screens as the Fast Track Process. If the results of the analysis using the technical screens indicate that the generator can be interconnected safely and reliably, the interconnection application is approved. To simplify the 10 kW Inverter Process, the Interconnection Customer agrees to the terms and conditions of the interconnection at the time the interconnection request is made.[16]

10. The technical screens used in the current 10 kW Inverter Process and the current Fast Track Process are included in section 2.2.1 of the *pro forma* SGIP. The following is section 2.2.1.2 of the *pro forma* SGIP, which is referred to in this NOPR as the 15 Percent Screen: [17]

For interconnection of a proposed Small Generating Facility to a radial distribution circuit, the aggregated generation, including the proposed Small Generating Facility, on the circuit shall not exceed 15 [percent] of the line section annual peak load as most recently measured at the substation. A line section is that portion of a Transmission Provider's electric system connected to a customer bounded by automatic sectionalizing devices or the end of the distribution line.

11. The Commission anticipated potential changes to its small generator interconnection regulations when it encouraged stakeholders to convene an informal meeting ''biennially, beginning two years from the issuance of this order, to consider and recommend consensus proposals for changes in the Commission's rules for small generator interconnection.'' [18] The Commission is unaware of any such meetings taking place to date.

B. Solar Energy Industries Association Petition

12. On February 16, 2012, pursuant to sections 205 and 206 of the FPA and Rule 207 of the Commission's Rules of Practice and Procedure,[19] and noting that the Commission encouraged stakeholders to submit proposed revisions to the regulations set forth in Order No. 2006,[20] the Solar Energy Industries Association (SEIA) filed a Petition to Initiate Rulemaking (Petition) requesting that the Commission revise the *pro forma* SGIA and SGIP set forth in Order No. 2006. SEIA asserts that the *pro forma* SGIP and SGIA as applied to small solar generation are no longer just and reasonable, have become unduly discriminatory, and present unreasonable barriers to market entry.[21] SEIA notes that its Petition applies exclusively to solar electric generation due to its unique characteristics.[22]

13. SEIA requests that the Commission modify the SGIP in three ways. First, SEIA requests that the Commission maintain section 2.2.1.2 of the *pro forma* SGIP (the 15 Percent Screen), but amend the *pro forma* SGIP to include a well-defined supplemental review that Transmission Providers must offer to provide Interconnection Customers in the event that a Small Generating Facility fails the 15 Percent Screen.[23]

[14] An adverse system impact means that technical or operational limits on conductors or equipment are exceeded under the interconnection, which may compromise the safety or reliability of the electric system.

[15] Order No. 2006, FERC Stats. & Regs. ¶ 31,180 at P 44.

[16] *Id.* P 46.

[17] The 15 Percent Screen was derived by using a ''rule of thumb'' that minimum load is approximately 30 percent of peak load. To assure minimum loads were not exceeded by generation on a given line section, a 50 percent safety margin was applied. *See* Nat'l Renewable Energy Lab, *Updating Interconnection Screens for PV System Integration* 2 (Feb. 2012), *http://www.nrel.gov/docs/fy12osti/54063.pdf.*

[18] Order No. 2006, FERC Stats. & Regs. ¶ 31,180 at P 118.

[19] 18 CFR 385.207 (2012).

[20] SEIA Petition at 4 (citing Order No. 2006, FERC Stats. & Regs. ¶ 31,180 at P 118).

[21] SEIA Petition at 12.

[22] *Id.* at 4 (explaining that solar generation occurs only during daylight hours when peak load typically occurs, and solar photovoltaic technology utilizes inverters with built-in functions that protect the safety and reliability of the electric system).

[23] On May 8, 2012, SEIA filed supplemental comments in Docket No. RM12–10–000, clarifying that it supports the supplemental review screens included in the revision to California Electric Rule 21, the California distribution level interconnection rules and regulations (Rule 21). These screens

14. Second, SEIA requests that the Commission eliminate the 2 MW threshold for participation in the Fast Track Process or, in the alternative, increase the threshold to 10 MW.[24]

15. Finally, SEIA encourages the Commission to modify the SGIP to provide, at the request and cost of the Interconnection Customer, an expedited, independent third-party expert technical review of proposed upgrades required for interconnection to evaluate whether there are simpler, less costly options to insure a safe and reliable interconnection. SEIA also encourages the Commission to clearly articulate that Transmission Providers are required to give such independent third-party reviews ''substantial weight'' or consideration.[25]

16. On February 28, 2012, the Commission issued a Notice of Petition for Rulemaking in Docket No. RM12–10–000, seeking public comment on SEIA's Petition. The Commission received twenty-three timely comments, two protests, two out-of-time comments, and four answers and reply comments.[26]

17. On June 13, 2012, the Commission issued a Notice of Technical Conference in Docket No. RM12–10–000 and in Docket No. AD12–17–000. On July 17, 2012, the Commission convened a technical conference at its headquarters. The Commission received nine post-technical conference comments, including clarifying comments from SEIA.

III. Need for Reform

18. The Commission preliminarily finds that the reforms proposed in this NOPR are needed to ensure that the rates, terms, and conditions of interconnection service for Small Generating Facilities are just and reasonable and not unduly discriminatory or preferential.

19. Since the issuance of Order No. 2006, many aspects of the energy industry have changed. For example, when Order No. 2006 was issued in 2005, only 79 MW of grid-connected PV were installed.[27] By 2011, grid-connected PV had reached approximately 4,000 MW.[28] Similarly, installed wind generation with a capacity of 20 MW or less has increased in the contiguous United States from 1,185 MW in 2005 to 2,961 MW in 2012.[29]

20. Recent Commission filings have referenced higher volumes of small generator interconnection requests.[30] Additionally, state renewable portfolio standards are driving small generator interconnection requests and influencing state policies. As of November 2012, 29 states and the District of Columbia had renewable portfolio standards, with an additional eight states having renewable portfolio goals.[31] Some state renewable portfolio standards include increasing the percentage of renewable energy resources over time, which will lead to increasing penetrations of these energy resources. For example, the California renewable portfolio standard is 20 percent by December 31, 2013, 25 percent by December 31, 2016, and 33 percent by 2020.[32] Similarly, the Massachusetts renewable portfolio standard is 15 percent by 2020 and an additional 1 percent each year thereafter.[33]

21. Some states have also adopted goals and policies to promote growth in distributed generation. For example, Arizona, Colorado, and Illinois have implemented distributed generation ''carve-outs'' in which a percentage of the total state renewable portfolio standard must come from distributed generation.[34] At the July 17, 2012 technical conference, the increase in distributed generation since the issuance of Order No. 2006 was noted.[35]

22. The growth in PV installations in particular has been cited by SEIA and IREC as evidence that there is a need to reform certain aspects of the SGIP,[36] while the California Utilities, NRECA and APPA state that this growth is evidence that Order No. 2006 has been and continues to be successful at facilitating interconnection of Small Generating Facilities.[37] These positions are not mutually exclusive. The success of Order No. 2006 in facilitating small generator interconnections could be a factor in penetration levels reaching 15 percent on certain line sections, which causes subsequent projects to fail the 15 Percent Screen. If this is the case, the 15 Percent Screen should be re-examined to determine if revisions to the screen can be made that will continue to allow projects to participate in the less costly and time-consuming Fast Track Process while maintaining the safety and reliability of the Transmission Provider's system.

23. Moreover, the Commission intended the *pro forma* SGIP and SGIA to apply to interconnections made subject to a jurisdictional OATT for the purposes of jurisdictional wholesale sales while also serving as a model for state interconnection rules.[38] In its comments on the Petition, the NJBPU stated support for keeping the *pro forma* SGIP current with technological advances and newly developed solutions for interconnecting small generators.[39] The California PUC recommends that the Commission consider adopting a supplemental review, including a 100 percent of minimum load screen similar to the one in Rule 21, for projects that fail the initial 15 Percent Screen and consider increasing the 2 MW threshold for participation in the Fast Track Process.[40] Comments such as these indicate that the Commission's actions to update its SGIP may assist states in their own efforts to reevaluate state interconnection rules.

24. The Commission acknowledges that the need for reform may not be uniform across the country and is proposing reforms that, in

create thresholds for distributed generation penetration based on minimum load and establish criteria for power quality, voltage, safety and reliability.

[24] SEIA Petition at 16–17.

[25] *Id.* at 17–18.

[26] *See* Appendix A: List of Short Names of Commenters on the SEIA Petition (Docket No. RM12–10–000) and the Technical Conference (Docket No. AD12–17–000).

[27] *See* Nat'l Renewable Energy Lab, *Updating Small Generator Interconnection Procedures for New Market Conditions* 7 (Dec. 2012), *http://www.nrel.gov/docs/fy13osti/56790.pdf.*

[28] *Id.* at 8.

[29] SNL Financial, *Power Plant Summary* (2013).

[30] *See, e.g., Cal. Indep. Sys. Operator Corp.,* 133 FERC ¶ 61,223, at P 3 (2010) (stating that an increasing volume of small generator Interconnection Requests had created inefficiencies); *Pacific Gas & Elec. Co.,* 135 FERC ¶ 61,094, at P 4 (2011) (stating that increased small generator Interconnection Requests resulted in a backlog of 170 requests over three years); *PJM Interconnection, LLC,* 139 FERC ¶ 61,079, at P 12 (2012) (stating that smaller projects comprised 66 percent of recent queue volume).

[31] *See* Dep't of Energy, *Summary Maps, http://www.dsireusa.org/summarymaps/index.cfm?ee=1&RE=1.*

[32] *See* Dep't of Energy, *California Incentives/Policies for Renewables & Efficiency: Renewables Portfolio Standard, http://www.dsireusa.org/incentives/incentive.cfm?Incentive_Code=CA25R&re=1&ee=1.*

[33] *See* Dep't of Energy, *Massachusetts Incentives/Policies for Renewables & Efficiency: Renewables Portfolio Standard, http://www.dsireusa.org/incentives/incentive.cfm?Incentive_Code=MA05R&re=1&ee=1.*

[34] *See* Dep't of Energy, *Summary Maps, http://www.dsireusa.org/summarymaps/index.cfm?ee=1&RE=1.*

[35] July 17, 2012 Technical Conference Transcript at 26, lines 22–24.

[36] SEIA Petition at 6; IREC March 27, 2012 Comments at 7–8.

[37] California Utilities Post-Technical Conference Comments at 3–4; NRECA and APPA March 27, 2012 Protest at 7.

[38] Order No. 2006, FERC Stats. & Regs. ¶ 31,180 at P 8.

[39] NJBPU March 27, 2012 Comments at 2–3.

[40] California PUC April 9, 2012 Comments at 4, 9.

implementation, should balance the interests of Small Generating Facilities and public utility Transmission Providers.

IV. Proposed Reforms

25. The Commission is proposing four reforms that are designed to address interconnection issues confronting Small Generating Facilities and public utility Transmission Providers and that will allow for the more efficient interconnection of small generation resources to the benefit of customers. The Commission also proposes to clarify or correct certain sections of the *pro forma* SGIP and SGIA. Together these proposals would reform certain aspects of the SGIP and SGIA that may present barriers to the interconnection of Small Generating Facilities and keep the cost of interconnecting these resources from becoming unjust, unreasonable or unduly discriminatory.

A. Pre-Application Report

26. The Commission proposes to provide the Interconnection Customer with the option of requesting a pre-application report from the Transmission Provider for a fee of $300. The Commission believes the pre-application report will promote transparency and efficiency in the interconnection process. In most cases, a pre-application report would increase the amount of information available to Interconnection Customers regarding system conditions at a particular Point of Interconnection and help the Interconnection Customer make a more efficient decision on siting its generating facility. Currently, only limited information is available to the Interconnection Customer under section 1.2 of the *pro forma* SGIP (relevant system studies, interconnection studies and other materials useful to an understanding of an interconnection at a particular point on the system), often leading developers to submit multiple requests for interconnection for a single project to determine which Point of Interconnection is the most advantageous. A pre-application report would enable Interconnection Customers to better evaluate possible Points of Interconnection before submitting a formal interconnection request, reducing the volume of interconnection requests and increasing the efficiency of the interconnection process for both the Transmission Provider and the Interconnection Customer.

27. The proposed revision includes new sections 1.2.2 through 1.2.4 of the SGIP and specifies the timeframes for providing the pre-application report, the $300 payment requirement from the Interconnection Customer to the Transmission Provider for producing the pre-application report, and the information that the report should contain. The pre-application report, as proposed, would only include information already available to the Transmission Provider. The proposed fee is the same as the amount required for the Rule 21 pre-application report.

28. To request a pre-application report, the developer must provide sufficient information to clearly identify the proposed Point of Interconnection. After a request is received, a utility must provide the report within ten business days. The utility is only required to provide existing information; the utility is not required to obtain new information prior to preparing the pre-application report. To the extent information is available, the Transmission Provider is required to provide information regarding:

a. Total capacity and available capacity of the facilities that serve the Point of Interconnection;

b. Existing and queued generation at the facilities likely serving the Point of Interconnection;

c. Voltage of the facilities that serve the Point of Interconnection;

d. Circuit distance between the proposed Point of Interconnection and the substation likely to serve the Point of Interconnection (Substation);

e. Number and rating of protective devices and number and type of voltage regulating devices between the proposed Point of Interconnection and the Substation;

f. Number of phases available at the proposed Point of Interconnection;

g. Limiting conductor ratings from the proposed Point of Interconnection to the Substation;

h. Peak and minimum load data; and

i. Existing or known constraints associated with the Point of Interconnection.

29. Several commenters express support for this proposal as a way to improve the interconnection process by making it less costly and more transparent, timely, and predictable.[41] The California Utilities argue that this approach will provide more accurate information for Interconnection Customers and will be less costly than publishing minimum load data as originally proposed by SEIA.[42] IREC notes that in its experience, generation developers may submit multiple interconnection requests in an effort to find the most cost effective Point of Interconnection. IREC asserts that it is inefficient for utilities to process interconnection requests that are unlikely to result in interconnections and that this raises project development costs for generators.[43] IREC states that a pre-application report would allow developers to request specific system information about a proposed Point of Interconnection.[44]

B. Threshold for Participation in the Fast Track Process

30. The Commission proposes to revise the 2 MW threshold for participation in the Fast Track Process. The Commission proposes to base Fast Track eligibility on individual system and generator characteristics, up to a limit of 5 MW. These characteristics include interconnection voltage level, the circuit distance of the interconnection from the substation, and generator capacity as the basis for determining whether an Interconnection Customer is eligible to be evaluated under the Fast Track Process. This approach to base Fast Track eligibility on individual system and generator characteristics is similar to the proposal submitted by IREC,[45] as shown in the table below.

Line voltage	Fast track eligibility regardless of location	Fast track eligibility on ≥ 600 ampere line and ≤ 2.5 miles from substation
< 5 kilovolt (kV)	≤ 1 MW	≤ 2 MW
≥ 5 kV and < 15 kV	≤ 2 MW	≤ 3 MW

[41] California Utilities Post-Technical Conference Comments at 6–7; IREC Post-Technical Conference Comments at 4–8; and Clean Coalition Post-Technical Conference Comments at 9.

[42] California Utilities Post-Technical Conference Comments at 6–7.

[43] IREC Post-Technical Conference Comments at 5.

[44] *Id.* at 7 (referencing IREC's Proposed SGIP Redline at § 1.2.2).

[45] *Id.* at 9–10.

Line voltage	Fast track eligibility regardless of location	Fast track eligibility on ≥ 600 ampere line and ≤ 2.5 miles from substation
≥ 15 kV and < 30 kV	≤ 3 MW	≤ 4 MW
≥ 30 kV	≤ 4 MW	≤ 5 MW

31. The Commission has designed this proposal in recognition that, as IREC comments,[46] a fixed size limit for the Fast Track may be unduly conservative in some cases and not conservative enough in others due to variations in distribution line voltage. Commenters point to voltage at the Point of Interconnection as a possible determinant of Fast Track eligibility.[47] Other factors mentioned by commenters include the size of the generator and the location of the interconnection on the circuit.[48] Voltage and generator size were factors in the different Fast Track thresholds that were agreed upon in the Rule 21 settlement process.[49] Pacific Gas and Electric states that it has eliminated the 2 MW limit entirely within its systems, and instead utilizes soft cap guidelines specific to the voltage of the Point of Interconnection. Pacific Gas and Electric asserts that it chose the advisory caps because they represent rough estimates of the MW size that would violate the 15 Percent Screen on a fully loaded circuit if no other projects interconnect to that circuit.[50] San Diego Gas & Electric supports the varied Rule 21 Fast Track eligibility limits, which it claims ''recognize the variability among electrical systems.'' [51]

32. The Commission notes that CAISO has a 5 MW threshold for participation in its Fast Track Process.[52] In its proposal to increase its Fast Track threshold from 2 MW to 5 MW, CAISO stated that, from an engineering standpoint, the increase is relatively small and would cause no greater impact on the safety and reliability of the CAISO-controlled transmission grid.[53] The Commission acknowledges, however, that there are a wide range of operating practices and electric system configurations. The Commission believes that in the instant proceeding, the proposed revision to the Fast Track threshold is appropriately based on individual system and generator characteristics that allow it to accommodate a variety of operating practices and electric system configurations while also maintaining safety and reliability. Thus, this proposal attempts to balance Interconnection Customers' need for a faster, less costly interconnection process with Transmission Providers' need to ensure the safety and reliability of their systems.

C. Customer Options Meeting and Supplemental Review

33. The Commission proposes to revise the customer options meeting and the supplemental review for those Interconnection Customers whose projects fail any of the ten Fast Track screens, including the 15 Percent Screen.[54] As noted in the Background section above, if the proposed Small Generating Facility passes the initial review screens in section 2.2.1 of the *pro forma* SGIP, the Transmission Provider will offer the Interconnection Customer an SGIA without requiring any supplemental review. If the proposed Small Generating Facility fails any of the screens, but the Transmission Provider determines that the Small Generating Facility may be interconnected without affecting safety and reliability, the Transmission Provider provides the Interconnection Customer with an SGIA. If the Transmission Provider cannot determine that the Small Generating Facility may be interconnected without affecting safety and reliability, the Transmission Provider must offer the Interconnection Customer the opportunity to attend a customer options meeting as set forth in section 2.3 of the *pro forma* SGIP to discuss how to proceed. The Commission proposes that, in that meeting, the Transmission Provider must: (1) Offer to perform facility modifications or minor modifications to the Transmission Provider's system (*e.g.,* changing meters, fuses, relay settings) and provide a non-binding good faith estimate of the cost to make such modifications, and if the Interconnection Customer agrees to pay for those minor modifications, the Transmission Provider will provide the Interconnection Customer an SGIA within 5 business days of the customer options meeting; (2) offer to perform a supplemental review of the proposed interconnection, paid for by the Interconnection Customer in the amount of $2,500; [55] or (3) obtain the Interconnection Customer's agreement to continue evaluating the interconnection request under the Study Process.

34. In order to clarify the outcome of the customer options meeting, the Commission proposes to modify section 2.3.1 of the *pro forma* SGIP to require the Transmission Provider to provide an interconnection agreement to the Interconnection Customer within 5 business days of the customer options meeting if the Interconnection Customer agrees to pay for minor modifications on the Transmission Provider's system. In addition, the Commission proposes to modify section 2.3.2 of the *pro forma* SGIP so that the supplemental review is performed at the discretion of the Interconnection Customer.

35. Further, the Commission proposes that the supplemental review consist of three additional screens: (1) The 100 percent of minimum load screen (using

[46] *Id.* at 9.

[47] *See* July 17, 2012 Technical Conference Transcript at 35, lines 8–11 (San Diego Gas & Electric stating that higher voltages may allow for higher penetrations of distributed generation); *see also id.* at 105, lines 14–16 (EEI commenting that a Fast Track threshold based on voltage would be more accurate than the current 2 MW threshold).

[48] *See id.* at 35, lines 1–4 (San Diego Gas & Electric asserting that size and location of the Small Generating Facility may impact the amount of generation that may be interconnected safely and reliably); *id.* at 59 lines 10–16 (same). *See also id.* at 38, lines 19–21 (IREC stating that locations within 2.5 miles of the relevant substation on 600 Ampere line allow for higher penetrations of distributed generation).

[49] *See* California PUC Motion to Lodge, Attachment B ''Revised Rule 21 Tariff'' at 26.

[50] Pacific Gas and Electric March 27, 2012 Comments at 4 (citing *Pacific Gas and Electric Company,* 135 FERC ¶ 61,094 (2011)).

[51] San Diego Gas & Electric March 27, 2012 Comments at 8–9.

[52] *Cal. Indep. Sys. Operator Corp.,* 133 FERC ¶ 61,223 (2010).

[53] *Id.* P 35.

[54] The current and proposed supplemental review is available to Interconnection Customers whose projects are being evaluated under the Fast Track Process. If a project is being evaluated under the 10 kW Inverter Process and it fails the screens in section 2.2.1 of the *pro forma* SGIP, it may then be evaluated under the Fast Track Process or the Study Process. If it is evaluated under the Fast Track Process, the supplemental review would be available to the project. (*See* Order No. 2006, FERC Stats. & Regs. ¶ 31,180 Appendix D, ''Flow Chart for Interconnecting a Certified Inverter-Based Small Generating Facility No Larger than 10 kW Using the ''10 kW Inverter Process''.)

[55] The proposed $2,500 fee for the supplemental review is the same as the amount required for the Rule 21 supplemental review.

daytime minimum load for small solar generators (20 MW or less) and absolute minimum load for all other Small Generating Facilities) (Minimum Load Screen); (2) the power quality and voltage screen; and (3) the safety and reliability screen.[56] If the proposed interconnection fails any of the supplemental review screens, the Transmission Provider will notify the Interconnection Customer that a Study Process under section 3 of the *pro forma* SGIP is required.[57]

36. The Minimum Load Screen is designed to ensure that power flow from the circuit into the substation and its impact on equipment loading, operation, and protection systems is minimal. The Minimum Load Screen asks whether the aggregate generation facility capacity on a line section is less than 100 percent of the minimum load measured during the period relevant for the generator type for all line sections bounded by automatic sectionalizing devices upstream of the generation facility. If minimum load data are not readily available,[58] however, the screen allows Transmission Providers the flexibility to calculate, estimate, or otherwise determine minimum load. The Commission proposes that, if this is not possible, the Transmission Provider must notify the Interconnection Customer of this in writing and include the reason(s) it is not possible.

37. The second screen, related to voltage and power quality, is designed to ensure that voltage regulation, fluctuation, and harmonic levels are kept within their limits in compliance with reliability standards, IEEE standards, and other applicable standards. The third screen, related to safety and reliability, ensures that a Small Generating Facility would not negatively impact safety and reliability. This screen is intended to provide Transmission Providers with the flexibility to identify some of the specific issues that may arise due to a Small Generating Facility's unique variations.

38. This proposed reform is intended to decrease interconnection costs in areas where the penetration of Small Generating Facilities is causing Interconnection Customers to fail the 15 Percent Screen. Moreover, the additional screens proposed to be included in the supplemental review are designed to protect the safety and reliability of the Transmission Provider's system while allowing those Small Generating Facilities that pass the proposed supplemental review to interconnect more efficiently and cost-effectively.

39. Some commenters argue that that 15 Percent Screen continues to be effective.[59] Others suggest revisions to the *pro forma* supplemental review in the event a project fails the Fast Track screens, similar to California Rule 21.[60] The Commission believes that the Rule 21 approach, after which our proposal is modeled, is a reasonable middle ground and proposes to leave the 15 Percent Screen in place while providing an alternative to the 15 Percent Screen as part of the supplemental review that enables penetration levels to exceed 15 percent on a case-by-case basis if the Transmission Provider determines that doing so will not create safety or reliability problems.

40. While SoCal Edison argues that the existing *pro forma* SGIP supplemental review offers utilities the flexibility to reevaluate projects that fail the Fast Track screens, including accounting for the unique characteristics of solar generation,[61] we note that section 2.4 of the current *pro forma* SGIP does not define the parameters or the timeline and provides little guidance for conducting the supplemental review if a Small Generating Facility fails the Fast Track screens in section 2 of the SGIP. The Commission believes that this lack of definition and transparency could negatively impact the interconnection process. A well-defined supplemental review will provide greater transparency with regard to what transpires in the supplemental review, as well as mitigate confusion and delays in the interconnection timeline. It will also allow interconnection requests to be more expeditiously reviewed while maintaining safety, reliability, and power quality standards.

D. Review of Required Upgrades

41. The Commission proposes to revise the *pro forma* SGIP to give the Interconnection Customer an opportunity to review and comment on the upgrades required for interconnection proposed by the Transmission Provider, similar to the opportunity for review and comment afforded the Interconnection Customer under the LGIP.

42. The Commission believes that, because the Transmission Provider is responsible for the safety and reliability of its system, the Transmission Provider should make the final decision regarding required upgrades for interconnection. However, the Commission is concerned that the *pro forma* SGIP (including the *pro forma* Facilities Study Agreement) may result in unjust and unreasonable interconnection costs as a result of failing to provide an opportunity for the Interconnection Customer to review and comment on the required upgrades. Therefore, the Commission proposes to revise the *pro forma* SGIP to include provisions similar to those in sections 8.3 and 8.4 of the *pro forma* LGIP.

43. In the LGIP, the Interconnection Customer has the opportunity to provide written comments on the draft facilities study report, which includes the proposed upgrades required for interconnection. The Transmission Provider must include these comments

[56] These screens are similar to the California Rule 21 screens or tests. *See* California PUC Motion to Lodge, Attachment B ''Revised Rule 21 Tariff,'' Section G.2 ''Supplemental Review Screens'' detailing the following screens:

(1) Penetration Test: ''Where 12 months of line section minimum load data is available, can be calculated, can be estimated from existing data, or determined from a power flow model, is the aggregate Generating Facility capacity on the Line Section less than 100 [percent] of the minimum load for all line sections bounded by automatic sectionalizing devices upstream of the Generating Facility?'' Note that the ''type of generation will be taken into account when calculating, estimating or determining circuit or Line Section minimum load relevant for the application of this screen. Solar generation systems with no battery storage use daytime minimum load (i.e. 10 a.m. to 4 p.m. for fixed panel systems and 8 a.m. to 6 p.m. for PV systems utilizing tracking systems), while all other generation uses absolute minimum load.''

(2) Power Quality and Voltage Tests: (a) ''Can it be determined within the Supplemental Review that the voltage regulation on the line section can be maintained in compliance with Commission Rule 2 and/or Conservation Voltage Regulation voltage requirements under all system conditions?'' (b) ''Can it be determined within the Supplemental Review that the voltage fluctuation is within acceptable limits as defined by [Institute of Electrical and Electronics Engineers] IEEE 1453 or utility practice similar to IEEE 1453?'' (c) ''Can it be determined within the Supplemental Review that the harmonic levels meet IEEE 519 limits at the Point of Common Coupling (PCC)?''

(3) Safety and Reliability Tests: ''Does the location of the proposed Generating Facility or the aggregate generation capacity on the Line Section create impacts to safety or reliability that cannot be adequately addressed without Detailed Study?''

[57] *See supra* P 7 for a description of the Study Process.

[58] Commenters express concern that minimum load data are not commonly tracked by utilities. *See* July 17, 2012 Technical Conference Transcript at 127, lines 16–19; EEI Post-Technical Conference Comments at 15; SEIA Post-Technical Conference Comments at 3.

[59] *See* SoCal Edison March 27, 2012 Comments at 6; EEI Post-Technical Conference Comments at 11–13.

[60] Clean Coalition Post-Technical Conference Comments at 3–4; IREC Post-Technical Conference Comments at 14; SEIA May 8, 2012 Comments at 1; California PUC April 9, 2012 Comments at 4; EEI Post-Technical Conference Comments at 11, fn. 10 (''Whereas the 100 percent minimum load threshold may be appropriate in the context of a supplemental review process such as the California Rule 21 proceeding.'').

[61] SoCal Edison March 27, 2012 Comments at 5.

in the final report and may alter the study based on the comments. In addition, upon request of the Interconnection Customer, the Transmission Provider must provide the Interconnection Customer with ''supporting documentation, workpapers, and databases or data'' developed in the preparation of the facilities study. The LGIP also provides for a meeting between the Interconnection Customer and the Transmission Provider within ten business days of the Interconnection Customer receiving the draft facilities study report.

44. The Commission believes that incorporating these *pro forma* LGIP provisions into the *pro forma* SGIP will encourage a dialogue between the Transmission Provider and the Interconnection Customer about required interconnection upgrades and will provide Interconnection Customers (or a third party designated by the Interconnection Customer) with a meaningful opportunity to review and comment on interconnection upgrade requirements.

E. Other Revisions

45. The Commission proposes to clarify or correct certain sections of the *pro forma* SGIP and SGIA. First, in section 3.3.5 of the *pro forma* SGIA, we propose to replace the first word of the section (''This'') with ''The.'' Second, the Commission proposes to revise section 1.1.1 of the *pro forma* SGIP to require that if an Interconnection Customer wishes to interconnect its Small Generating Facility using Network Resource Interconnection Service, it must do so under the LGIP and execute the Large Generator Interconnection Agreement. This requirement was included in Order No. 2003 [62] but was not made clear in the *pro forma* SGIP. To facilitate this clarification, we propose to add the definitions of Network Resource and Network Resource Interconnection Service to Attachment 1, Glossary of Terms, of the *pro forma* SGIP.

46. The Commission also proposes to modify section 1.5.4 of the *pro forma* SGIA to address a reliability concern resulting from recently identified issues in Germany and the United States (U.S.). The German issue is related to over-frequency resulting from imbalances between generation and load.[63] The specific cause of over-frequency in Germany is not yet an issue in the U.S., although over-frequency events have occurred in the U.S.[64] The North American Electric Reliability Corporation (NERC) has identified a related bulk electric system reliability concern as part of its Frequency Response Initiative [65] where residential and commercial scale PV systems could trip during under-frequency conditions. This could become a matter of concern at high penetrations of PV resources. While the German government has ordered the retrofit of thousands of PV systems at significant cost to address its frequency issue,[66] the Commission proposes to prevent such problems with frequency now to mitigate this risk. The proposed revisions to section 1.5.4 of the *pro forma* SGIA will require the Interconnection Customer to design, install, maintain, and operate its Small Generating Facility, in accordance with the latest version of the applicable standards,[67] to prevent automatic disconnection during an over- or under-frequency event and to ensure that rates remain just and reasonable.

V. Workshop

47. Commenters [68] suggest that the Commission convene a stakeholder working group or similar process as contemplated in Order No. 2006 [69] to review and make recommendations on the proposals in the SEIA Petition and issues raised at the July 17, 2012 technical conference. In light of the technical nature of the reforms proposed above, the Commission agrees that the rulemaking process could benefit from stakeholder discussions of the NOPR proposals and other related issues. Therefore, during the comment period, the Commission will hold a workshop so that members of the public, electric industry participants, and federal and state agencies may discuss the proposals in this NOPR and possible refinements to these proposals before the end of the comment period.

48. The workshop will be facilitated by Commission staff and will focus on the technical details of the NOPR proposals and other related issues. Some of the specific items that Commission staff anticipates addressing include:

a. Whether the characteristics proposed for Fast Track Process eligibility should be modified to protect system safety and reliability.

b. The specific content of the proposed supplemental review screens. For example,

i. Whether twelve months of minimum load data is appropriate for use in the Minimum Load Screen, or whether additional data, if available, should be required to be considered.

ii. The reasons that minimum load data are not available to Transmission Providers and what the Commission could do to encourage data availability where appropriate.

c. The content of the pre-application report.

d. Whether the fees proposed in the NOPR ($300 for the pre-application report and $2,500 for the supplemental review) are appropriate.

e. Whether storage devices could fall within the definition of Small Generating Facility included in Attachment 1 to the SGIP and Attachment 1 to the SGIA as devices that produce electricity.

We will schedule the workshop so that comments on this Proposed Rule may reflect any reactions to the workshop discussions.

49. Within April 2, 2013 the Commission will announce the workshop in a separate notice. Comments related to the workshop will be due at the same time as comments on this NOPR (see the Comment Procedures section below).

VI. Compliance Filings

50. To comply with the requirements of this Proposed Rule, the Commission proposes to require each public utility Transmission Provider to submit a compliance filing within six months of the effective date of the Final Rule in this proceeding revising its SGIP and SGIA or other document(s) subject to the Commission's jurisdiction as necessary to demonstrate that it meets

[62] Order No. 2003, FERC Stats. & Regs. ¶ 31,146 at P 140.

[63] In Germany, large amounts of distributed PV installations are set to trip at frequency 50.2 Hz or higher. An over-frequency (50.2 Hz and higher) event can cause the PV generation equipment connected to the low-voltage network to shut down. Such a sudden drop in generation could seriously disrupt the system.

[64] *See* FERC & NERC, Arizona-Southern California Outages on September 8, 2011: Causes and Recommendations (2011), *http://www.nerc.com/files/AZOutage_Report_01MAY12.pdf.*

[65] NERC, Frequency Response Initiative Report: The Reliability Role of Frequency Response 52 (2012), *http://www.nerc.com/docs/standards/dt/FRI_Report_w-appendices_10-15-12.pdf.*

[66] *See* VDE, Study on the 50.2 Hz Problem (2012), *http://www.vde.com/en/fnn/Documents/FNN_50-2-Hz_Praesentation_2011-09_engl.pdf.*

[67] *See, e.g.,* IEEE Standard 1547 for Interconnecting Distributed Resources with Electric Power Systems and Underwriters Laboratories Inc. Standard 1741 for Safety for Inverters, Converters, and Controllers for Use in Independent Power Systems.

[68] NRECA Post-Technical Conference Comments at 2; EEI Post-Technical Conference Comments at 1–2; and California Utilities Post-Technical Conference Comments at 7.

[69] Order No. 2006, FERC Stats. & Regs. ¶ 31,180 at P 118.

the requirements set forth in this Proposed Rule.[70]

51. In some cases, public utility Transmission Providers may have provisions in their existing SGIPs and SGIAs that the Commission has deemed to be consistent with or superior to the *pro forma* SGIP and SGIA. Where these provisions are being modified by the Final Rule, public utility Transmission Providers must either comply with the Final Rule or demonstrate that these previously-approved variations continue to be consistent with or superior to the *pro forma* SGIP and SGIA as modified by the Final Rule.

52. The Commission will assess whether each compliance filing satisfies the proposed requirements and principles stated above and issue additional orders as necessary to ensure that each public utility Transmission Provider meets the requirements of this Proposed Rule.

53. The Commission proposes that Transmission Providers that are not public utilities will have to adopt the requirements of this Proposed Rule as a condition of maintaining the status of their safe harbor tariff or otherwise satisfying the reciprocity requirement of Order No. 888.[71]

VII. Procedural Matters

54. On October 8, 2012, the California PUC submitted a motion to lodge California PUC Decision (D.) 12–09–018, the revised Rule 21, and the Assigned Commissioner's Amended Scoping memo and Ruling Requesting Comments (Amended Scoping Memo).[72] In its motion, the California PUC states that its recently approved Rule 21 reforms are central to the issues raised in SEIA's Petition and should be lodged into the record of this proceeding.[73] No comments were filed in response to the motion.

55. We will grant the California PUC's motion to lodge California PUC Decision (D.) 12–09–018, revised Rule 21, and the Amended Scoping Memo into the record of this proceeding because the documents have provided information that assisted us in our decision-making process.

VIII. Information Collection Statement

56. The following collections of information contained in this Proposed Rule are subject to review by the Office of Management and Budget (OMB) under section 3507(d) of the Paperwork Reduction Act of 1995.[74] OMB's regulations require approval of certain information collection requirements imposed by agency rules.[75] Upon approval of a collection of information, OMB will assign an OMB control number and expiration date. Respondents subject to the filing requirements of this rule will not be penalized for failing to respond to these collections of information unless the collections of information display a valid OMB control number. The Commission solicits comments on the Commission's need for this information, whether the information will have practical utility, the accuracy of the burden estimates, ways to enhance the quality, utility, and clarity of the information to be collected or retained, and any suggested methods for minimizing respondents' burden, including the use of automated information techniques.

57. Additionally, the Commission encourages comments regarding the time burden expected to be required to comply with the proposed rule.

Burden Estimate: The additional estimated public reporting burdens for the proposed reporting requirements in this rule are as follows:

Data collection FERC 516A	Number of respondents [1]	Number of responses[76] [2]	Hours per response [3]	Total annual hours [1 × 2 × 3]
Conforming SGIP and SGIA changes to incorporate proposed revisions. First year only. (18 CFR 35.28(f) (2012))	142 Transmission Providers	1	6	852
Pre-Application Report (18 CFR 35.28(f) (2012))	800 Interconnection Customers[77]	1	0.5	400
	142 Transmission Providers	5.63	2	1600
Supplemental Review (18 CFR 35.28(f) (2012))	500 Interconnection Customers	1	0.5	250
	142 Transmission Providers	3.52	20	10,000
Review of Required Upgrades (18 CFR 35.28(f) (2012)).	250 Interconnection Customers	1	1	250
	142 Transmission Providers	1.76	2	500
Totals:				
First Year				13,852
Year Two and Ongoing				13,000

The Commission seeks comment on the change in the existing burden that would result from the following three proposed revisions that are not included in the table above. First, the Commission believes that the proposed revision of the 2 MW threshold for participation in the Fast Track Process will result in a net decrease in the public reporting burden because some Small Generating Facilities will be evaluated under the Fast Track Process rather than the Study Process. The Commission estimates that 100 Interconnection Customers annually may be able to participate in the Fast Track Process rather than the Study Process under the proposed rule. Second, the Commission proposes to revise section 2.3.2 so that the Transmission Provider is no longer required to provide a good faith estimate of the cost of performing the supplemental review to the Interconnection Customer. The Commission believes that this may result in a reduction in burden for the

[70] *See* Appendix C and Appendix D for the proposed *pro forma* SGIP and SGIA provisions consistent with this Proposed Rule.

[71] *Promoting Wholesale Competition Through Open Access Non-Discriminatory Transmission on Services by Public Utilities; Recovery of Stranded Costs by Public Utilities and Transmitting Utilities,* Order No. 888, FERC Stats. & Regs. ¶ 31,036, at 31,760–763 (1996).

[72] California PUC Motion to Lodge at 1.

[73] *Id.* at 1–3.

[74] 44 U.S.C. 3507(d) (2006).

[75] 5 CFR 1320.11 (2012).

[76] The number of responses represents the average number of responses per respondent.

[77] We assume each request for a pre-application report corresponds with one Interconnection Customer.

Transmission Provider. Third, the Commission proposes to revise section 1.1.1 of the *pro forma* SGIP to require that if an Interconnection Customer wishes to interconnect its Small Generating Facility using Network Resource Interconnection Service, it must do so under the LGIP and execute the Large Generator Interconnection Agreement. While this addition to the *pro forma* SGIP should prevent Interconnection Customers from following the SGIP where not appropriate, thereby reducing the amount of work, the Commission is unsure if it will lead to any substantive burden reduction.

Cost to Comply: The Commission has projected the cost of compliance to be $817,268 in the initial year and $767,000 in subsequent years.

Total Annual Hours for Collection in initial year (13,852 hours) @ $59/hour [78] = $817,268.

Total Annual Hours for Collection in subsequent years (13,000 hours) @ $59/hour = $767,000.

Title: FERC–516A, Standardization of Small Generator Interconnection Agreements and Procedures.

Action: Revision of Currently Approved Collection of Information.

OMB Control No. 1902–0203.

Respondents for this Rulemaking: Businesses or other for profit and/or not-for-profit institutions.

Frequency of Information: As indicated in the table.

Necessity of Information: The Commission is proposing changes to the *pro forma* SGIP and SGIA in order to more efficiently and cost-effectively interconnect generators no larger than 20 MW (small generators) to Commission-jurisdictional transmission systems. The purpose of this Proposed Rule is to revise the *pro forma* SGIP and SGIA so small generators can be reliably and efficiently integrated into the electric grid and to ensure that Commission-jurisdictional services are provided at rates, terms and conditions that are just and reasonable and not unduly discriminatory. This Proposed Rule seeks to achieve this goal by amending the *pro forma* SGIP and SGIA to: (1) Incorporate provisions that would provide an Interconnection Customer with the option of requesting from the Transmission Provider a pre-application report providing existing information about system conditions at a possible Point of Interconnection; (2) revise the 2 MW threshold for participation in the Fast Track Process included in section 2 of the *pro forma* SGIP; (3) revise the customer options meeting and the supplemental review following failure of the Fast Track screens so that the supplemental review is performed at the discretion of the Interconnection Customer and includes minimum load and other screens to determine if a Small Generating Facility may be interconnected safely and reliably; and (4) revise the *pro forma* SGIP Facilities Study Agreement to allow the Interconnection Customer the opportunity to provide written comments to the Transmission Provider on the upgrades required for interconnection. The Commission also proposes to clarify or correct certain sections of the *pro forma* SGIP and SGIA.

Internal Review: The Commission has reviewed the proposed changes and has determined that the changes are necessary. These requirements conform to the Commission's need for efficient information collection, communication, and management within the energy industry. The Commission has assured itself, by means of internal review, that there is specific, objective support for the burden estimates associated with the information collection requirements.

58. Interested persons may obtain information on the reporting requirements by contacting the following: Federal Energy Regulatory Commission, 888 First Street NE., Washington, DC 20426 [Attention: Ellen Brown, Office of the Executive Director], email: *DataClearance@ferc.gov,* Phone: (202) 502–8663, fax: (202) 273–0873.

59. Comments on the collections of information and the associated burden estimates in the proposed rule should be sent to the Commission in this docket and may also be sent to the Office of Information and Regulatory Affairs, Office of Management and Budget, 725 17th Street, NW., Washington, DC 20503 [Attention: Desk Officer for the Federal Energy Regulatory Commission], at the following email address: *oira_submission@omb.eop.gov.* Please reference OMB Control No. 1902–0203 and the docket number of this proposed rulemaking in your submission.

IX. Environmental Analysis

60. The Commission is required to prepare an Environmental Assessment or an Environmental Impact Statement for any action that may have a significant adverse effect on the human environment.[79] The Commission has categorically excluded certain actions from these requirements as not having a significant effect on the human environment.[80] The actions proposed here fall within categorical exclusions in the Commission's regulations for rules that are clarifying, corrective, or procedural, for information gathering, analysis, and dissemination, and for sales, exchange, and transportation of natural gas that requires no construction of facilities.[81] Therefore, an environmental assessment is unnecessary and has not been prepared as part of this NOPR.

X. Regulatory Flexibility Act

61. The Regulatory Flexibility Act of 1980 (RFA) [82] generally requires a description and analysis of proposed rules that will have significant economic impact on a substantial number of small entities. The RFA mandates consideration of regulatory alternatives that accomplish the stated objectives of a proposed rule and that minimize any significant economic impact on a substantial number of small entities. The Small Business Administration's Office of Size Standards develops the numerical definition of a small business.[83] The Small Business Administration has established a size standard for electric utilities, stating that a firm is small if, including its affiliates, it is primarily engaged in the transmission, generation and/or distribution of electric energy for sale and its total electric output for the preceding twelve months did not exceed four million megawatt hours (MWh).[84] The Commission estimates that the total number of Transmission Providers that, absent waiver, would have to modify their current SGIPs and SGIAs is 142. Of these, an estimated 11 Transmission Providers dispose of 4 million MWh or less per year. The Commission estimates that the average total cost for each of these entities is $5,381.[85] The Commission does not consider this to be a significant economic impact. The estimated total number of Interconnection Customers that may be subject to the requirements of this proposed rule is 800.[86] Of these, all are

[78] This figure is the average of the salary plus benefits for an attorney, consultant (engineer), engineer, and administrative staff. The wages are derived from the Bureau of Labor and Statistics at *http://bls.gov/oes/current/naics3_221000.htm* and the benefits figure from *http://www.bls.gov/news.release/ecec.nr0.htm.*

[79] *Regulations Implementing the National Environmental Policy Act of 1969,* Order No. 486, FERC Stats. & Regs. ¶ 30,783 (1987).

[80] 18 CFR 380.4 (2012).

[81] *See* 18 CFR 380.4(a)(2)(ii) (2012).

[82] 5 U.S.C. 601–612 (2006).

[83] 13 CFR 121.101 (2012).

[84] 13 CFR 121.201, Sector 22, Utilities & n.1.

[85] This number is derived by multiplying the hourly figure for Transmission Providers in the Burden Estimate table (12,952) by the cost per hour ($59) divided by the number of Transmission Providers. 12,952 hrs * $59/hr/142 = $5,381.

[86] We assume that 800 Commission-jurisdictional interconnection requests will be made annually. For the purposes of this proposed rule, each of these

Continued

considered small. The Commission estimates that the total annual cost for each entity is $1,984.[87] The Commission does not consider this to be a significant economic impact. Further, the Commission expects that Interconnection Customers that are able to participate in the Fast Track Process rather than the Study Process will benefit from the proposed revisions to the *pro forma* SGIP.

62. Based on the above, the Commission certifies that the new or revised requirements set forth in the proposed rule will not have a significant economic impact on a substantial number of small entities. Accordingly, no regulatory flexibility analysis is required.

XI. Comment Procedures

63. The Commission invites interested persons to submit comments on the matters and issues proposed in this notice to be adopted, including any related matters or alternative proposals that commenters may wish to discuss. Comments are due June 3, 2013. Comments must refer to Docket No. RM13–2–000, and must include the commenter's name, the organization they represent, if applicable, and their address in their comments.

64. The Commission encourages comments to be filed electronically via the eFiling link on the Commission's web site at *http://www.ferc.gov.* The Commission accepts most standard word processing formats. Documents created electronically using word processing software should be filed in native applications or print-to-PDF format and not in a scanned format. Commenters filing electronically do not need to make a paper filing.

65. Commenters that are not able to file comments electronically must send an original of their comments to: Federal Energy Regulatory Commission, Secretary of the Commission, 888 First Street NE., Washington, DC 20426.

66. All comments will be placed in the Commission's public files and may be viewed, printed, or downloaded remotely as described in the Document Availability section below. Commenters on this proposal are not required to serve copies of their comments on other commenters.

XII. Document Availability

67. In addition to publishing the full text of this document in the **Federal Register**, the Commission provides all interested persons an opportunity to view and/or print the contents of this document via the Internet through the Commission's Home Page (*http://www.ferc.gov*) and in the Commission's Public Reference Room during normal business hours (8:30 a.m. to 5:00 p.m. Eastern time) at 888 First Street NE., Room 2A, Washington, DC 20426.

68. From the Commission's Home Page on the Internet, this information is available on eLibrary. The full text of this document is available on eLibrary in PDF and Microsoft Word format for viewing, printing, and/or downloading. To access this document in eLibrary, type the docket number excluding the last three digits of this document in the docket number field.

69. User assistance is available for eLibrary and the Commission's Web site during normal business hours from the Commission's Online Support at 202–502–6652 (toll free at 1–866–208–3676) or email at *ferconlinesupport@ferc.gov,* or the Public Reference Room at (202) 502–8371, TTY (202) 502–8659. Email the Public Reference Room at *public.referenceroom@ferc.gov.*

List of Subjects in 18 CFR Part 35

Electric power rates, Electric utilities, and Reporting and recordkeeping requirements.

By direction of the Commission. Chairman Wellinghoff is not participating. Commissioner Clark is recused.

Nathaniel J. Davis, Sr.,

Deputy Secretary.

In consideration of the foregoing, the Commission proposes to revise Part 35, Chapter I, Title 18 of the Code of Federal Regulations as follows.

PART 35—FILING OF RATE SCHEDULES

■ 1. The authority citation for Part 35 continues to read as follows:

Authority: 16 U.S.C. 791a–825r, 2601–2645; 31 U.S.C. 9701; 42 U.S.C. 7101–7352.

■ 2. Revise § 35.28(f) to read as follows:

§ 35.28 Non-discriminatory open access transmission tariff.

* * * * *

(f) * * *

(1) Every public utility that is required to have on file a non-discriminatory open access transmission tariff under this section must amend such tariff by adding the standard interconnection procedures and agreement contained in Order No. 2003, FERC Stats. & Regs. ¶ 31,146 (Final Rule on Generator Interconnection), as amended by the Commission in Order No. 661, FERC Stats. & Regs. ¶ 31,186 (Final Rule on Interconnection for Wind Energy), and the standard small generator interconnection procedures and agreement contained in Order No. 2006, FERC Stats. & Regs. ¶ 31,180 (Final Rule on Small Generator Interconnection), as amended by the Commission in Order No. ____, FERC Stats. & Regs. ¶ ____ (Final Rule on Small Generator Interconnection Agreements and Procedures), or such other interconnection procedures and agreements as may be approved by the Commission consistent with Order No. 2003, FERC Stats. & Regs. ¶ 31,146 (Final Rule on Generator Interconnection), Order No. 2006, FERC Stats. & Regs. ¶ 31,180 (Final Rule on Small Generator Interconnection), and Order No. ____, FERC Stats. & Regs. ¶ ____ (Final Rule on Small Generator Interconnection Agreements and Procedures).

(i) The amendment to implement the Final Rule on Generator Interconnection required by the preceding subsection must be filed no later than January 20, 2004.

(ii) The amendment to implement the Final Rule on Small Generator Interconnection required by the preceding subsection must be filed no later than August 12, 2005.

(iii) The amendment to implement the Final Rule on Interconnection for Wind Energy required by the preceding subsection must be filed no later than December 30, 2005.

(iv) The amendment to implement the Final Rule on Small Generator Interconnection Procedures required by the preceding subsection must be filed no later than April 2, 2013.

(v) Any public utility that seeks a deviation from the standard interconnection procedures and agreement contained in Order No. 2003, FERC Stats. & Regs. ¶ 31,146 (Final Rule on Generator Interconnection), as amended by the Commission in Order No. 661, FERC Stats. & Regs. ¶ 31,186 (Final Rule on Interconnection for Wind Energy), or the standard small generator interconnection procedures and agreement contained in Order No. 2006, FERC Stats. & Regs. ¶ 31,180 (Final Rule on Small Generator Interconnection), as amended by the Commission in Order No. ____, FERC Stats. & Regs. ¶ ____ (Final Rule on Small Generator Interconnection Agreements and Procedures), must demonstrate that the

requests is assumed to be made by a separate Interconnection Customer.

[87] This number is derived by multiplying the hourly figure for Interconnection Customers in the Burden Estimate table (900) plus an additional 750 hours associated with reviewing the draft facilities study report by the cost per hour ($59); plus the $300 fee per pre-application report multiplied by 800 Interconnection Customers; plus the $2,500 fee per supplemental review multiplied by 500 Interconnection Customers; all divided by the total number of Interconnection Customers (800). ((1,650 hrs * $59/hr) + ($300 * 800) + ($2,500 * 500))/800 = $1,984.

deviation is consistent with the principles of either Order No. 2003, FERC Stats. & Regs. ¶ 31,146 (Final Rule on Generator Interconnection) or Order No. 2006, FERC Stats. & Regs. ¶ 31,180 (Final Rule on Small Generator Interconnection).

* * * * *

Note: Appendix A will not be published in the Code of Federal Regulations.

Appendix A: List of Short Names of Commenters on the SEIA Petition (Docket No. RM12–10–000) and the Technical Conference (Docket No. AD12–17–000)

Short name or acronym	Commenter
AEP	American Electric Power Service Corporation.
Amonix	Amonix.
Borrego	Borrego Solar Systems.
California ISO	California Independent System Operator Corporation.
California PUC	California Public Utilities Commission.
California Utilities	Pacific Gas and Electric Company, San Diego Gas & Electric Company, and Southern California Edison Company.
Clean Coalition	Clean Coalition.
Detroit Edison	Detroit Edison Company.
Duke	Duke Energy Corporation.
EEI	Edison Electric Institute.
Environmental Defense Fund	Environmental Defense Fund.
enXco	enXco Development Corporation.
IREC	Interstate Renewable Energy Council.
NARUC	National Association of Regulatory Utility Commissioners.
NRECA and APPA	National Rural Electric Cooperative Association and American Public Power Association.
NV Energy	Nevada Power Company and Sierra Pacific Power Company.
NJBPU	New Jersey Board of Public Utilities.
NRG	NRG Companies.
Pacific Gas and Electric	Pacific Gas and Electric Company.
Pepco	Pepco Holdings Inc., Atlantic City Electric Company, Delmarva Power & Light Company, and Potomac Electric Power Company.
PJM	PJM Interconnection, LLC.
Public Interest Organizations	Center for Rural Affairs, Climate + Energy Project, Conservation Law Foundation, Energy Future Coalition, Environmental Law & Policy Center, Fresh Energy, National Audubon Society, Natural Resources Defense Council, Northwest Energy Coalition, Pace Energy and Climate Center, Southern Environmental Law Center, Sustainable FERC Project, Sierra Club, Union of Concerned Scientists, and the Wilderness Society.
Recurrent Energy	Recurrent Energy.
San Diego Gas & Electric	San Diego Gas & Electric Company.
SEIA	Solar Energy Industries Association.
SolarCity	SolarCity Corporation.
SoCal Edison	Southern California Edison Company.
SunEdison	SunEdison LLC.
SunPower	SunPower Corporation.
Suntech	Suntech America.
USCHPA	United States Clean Heat & Power Association.

Note: Appendix B will not be published in the Code of Federal Regulations.

Appendix B

Flow Chart for Interconnecting a Certified Small Generating Facility Using the "Fast Track Process"

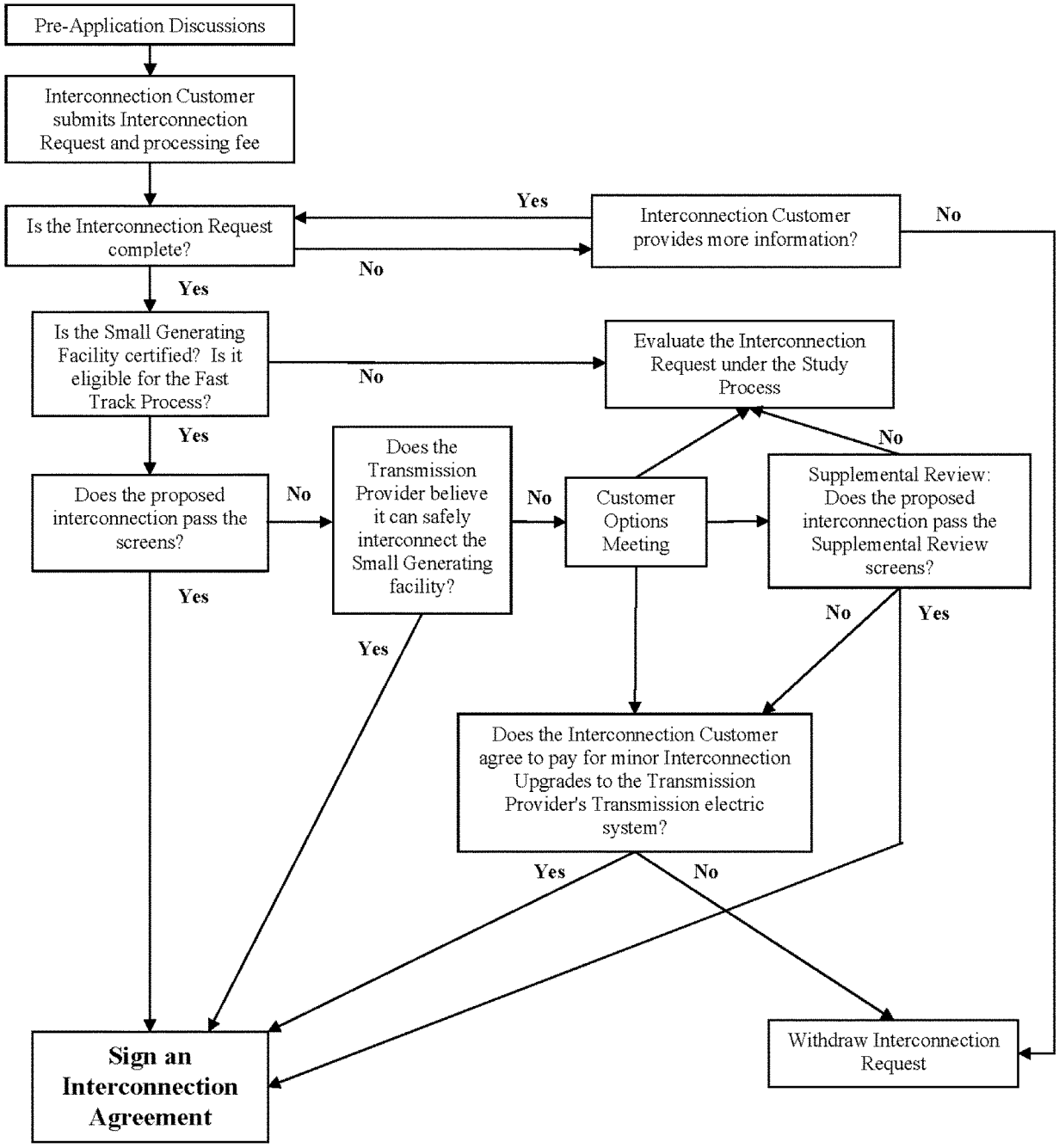

Note: Appendix C will not be published in the Code of Federal Regulations.

Appendix C to the Proposed Small Generator Interconnection Rule

SMALL GENERATOR INTERCONNECTION PROCEDURES (SGIP)

(For Generating Facilities No Larger Than 20 MW)

TABLE OF CONTENTS

Page No.

Section 1. Application ..... - 1 -
1.1 Applicability ..... - 1 -
1.2 Pre-Application ..... - 2 -
1.3 Interconnection Request ..... - 4 -
1.4 Modification of the Interconnection Request ..... - 5 -
1.5 Site Control ..... - 5 -
1.6 Queue Position ..... - 5 -
1.7 Interconnection Requests Submitted Prior to the Effective Date of the SGIP - 6 -
Section 2. Fast Track Process ..... - 6 -
2.1 Applicability ..... - 6 -
2.2 Initial Review ..... - 7 -
2.2.1 Screens ..... - 7 -
2.3 Customer Options Meeting ..... - 10 -
2.4 Supplemental Review ..... - 11 -
Section 3. Study Process ..... - 15 -
3.1 Applicability ..... - 15 -
3.2 Scoping Meeting ..... - 15 -
3.3 Feasibility Study ..... - 16 -
3.4 System Impact Study ..... - 16 -
3.5 Facilities Study ..... - 18 -
Section 4. Provisions that Apply to All Interconnection Requests ..... - 19 -
4.1 Reasonable Efforts ..... - 19 -
4.2 Disputes ..... - 19 -
4.3 Interconnection Metering ..... - 20 -
4.4 Commissioning ..... - 20 -
4.5 Confidentiality ..... - 20 -
4.6 Comparability ..... - 21 -
4.7 Record Retention ..... - 22 -
4.8 Interconnection Agreement ..... - 22 -
4.9 Coordination with Affected Systems ..... - 22 -
4.10 Capacity of the Small Generating Facility ..... - 22 -

Attachment 1 – Glossary of Terms
Attachment 2 – Small Generator Interconnection Request
Attachment 3 – Certification Codes and Standards
Attachment 4 – Certification of Small Generator Equipment Packages
Attachment 5 – Application, Procedures, and Terms and Conditions for Interconnecting a

Certified Inverter-Based Small Generating Facility No Larger than 10 kW ("10 kW Inverter Process")
Attachment 6 – Feasibility Study Agreement
Attachment 7 – System Impact Study Agreement
Attachment 8 – Facilities Study Agreement

Section 1. Application

1.1 Applicability

1.1.1 A request to interconnect a certified Small Generating Facility (See Attachments 3 and 4 for description of certification criteria) ~~no larger than 2 MW~~ to the Transmission Provider's Distribution System shall be evaluated under the section 2 Fast Track Process if the eligibility requirements of section 2.1 are met. A request to interconnect a certified inverter-based Small Generating Facility no larger than 10 kilowatts (kW) shall be evaluated under the Attachment 5 10 kW Inverter Process. A request to interconnect a Small Generating Facility ~~larger than 2 MW but~~ no larger than 20 megawatts (MW) that does not meet the eligibility requirements of section 2.1, or ~~or a Small Generating Facility that~~ does not pass the Fast Track Process or the 10 kW Inverter Process, shall be evaluated under the section 3 Study Process. If the Interconnection Customer wishes to interconnect its Small Generating Facility using Network Resource Interconnection Service, it must do so under the Standard Large Generator Interconnection Procedures and execute the Standard Large Generator Interconnection Agreement.

1.1.2 Capitalized terms used herein shall have the meanings specified in the Glossary of Terms in Attachment 1 or the body of these procedures.

1.1.3 Neither these procedures nor the requirements included hereunder apply to Small Generating Facilities interconnected or approved for interconnection prior to 60 Business Days after the effective date of these procedures.

1.1.4 Prior to submitting its Interconnection Request (Attachment 2), the Interconnection Customer may ask the Transmission Provider's interconnection contact employee or office whether the proposed interconnection is subject to these procedures. The Transmission Provider shall respond within 15 Business Days.

1.1.5 Infrastructure security of electric system equipment and operations and control hardware and software is essential to ensure day-to-day reliability and operational security. The Federal Energy Regulatory Commission expects all Transmission Providers, market participants, and Interconnection Customers interconnected with electric systems to comply with the recommendations offered by the President's Critical Infrastructure

Protection Board and best practice recommendations from the electric reliability authority. All public utilities are expected to meet basic standards for electric system infrastructure and operational security, including physical, operational, and cyber-security practices.

1.1.6 References in these procedures to interconnection agreement are to the Small Generator Interconnection Agreement (SGIA).

1.2 Pre-Application

1.2.1 The Transmission Provider shall designate an employee or office from which information on the application process and on an Affected System can be obtained through informal requests from the Interconnection Customer presenting a proposed project for a specific site. The name, telephone number, and e-mail address of such contact employee or office shall be made available on the Transmission Provider's Internet web site. Electric system information provided to the Interconnection Customer should include relevant system studies, interconnection studies, and other materials useful to an understanding of an interconnection at a particular point on the Transmission Provider's Transmission System, to the extent such provision does not violate confidentiality provisions of prior agreements or critical infrastructure requirements. The Transmission Provider shall comply with reasonable requests for such information.

1.2.2 In addition to the information described in section 1.2.1, which may be provided in response to an informal request, an Interconnection Customer may submit a formal written request along with a non-refundable fee of $300 for a pre-application report on a proposed project at a specific site. The written pre-application report request shall include a proposed Point of Interconnection, which shall be defined sufficiently to clearly identify the location of the proposed Point of Interconnection. The Transmission Provider shall provide the pre-application data described in section 1.2.3 to the Interconnection Customer within ten (10) Business Days of receipt of the written request and payment of the $300 fee.

1.2.3 Subject to section 1.2.4, the pre-application report will include the following information:

1.2.3.1 Total capacity (in MW) of substation/area bus, bank or circuit based on normal or operating ratings likely to serve the

proposed Point of Interconnection.

1.2.3.2 Existing aggregate generation capacity (in MW) interconnected to a substation/area bus, bank or circuit (i.e., amount of generation online) likely to serve the proposed Point of Interconnection.

1.2.3.3 Aggregate queued generation capacity (in MW) for a substation/area bus, bank or circuit (i.e., amount of generation in the queue) likely to serve the proposed Point of Interconnection.

1.2.3.4 Available capacity (in MW) of substation/area bus or bank and circuit mostly likely to serve the proposed Point of Interconnection (i.e., total capacity less the sum of existing aggregate generation capacity and aggregate queued generation capacity).

1.2.3.5 Substation nominal distribution voltage and/or transmission nominal voltage if applicable.

1.2.3.6 Nominal distribution circuit voltage at the proposed Point of Interconnection.

1.2.3.7 Approximate circuit distance between the proposed Point of Interconnection and the substation.

1.2.3.8 Relevant line section(s) peak load estimate, and minimum load data, including daytime minimum load as described in section 2.3.1.1.1 below and absolute minimum load, when available.

1.2.3.9 Number and rating of protective devices and number and type (standard, bi-directional) of voltage regulating devices between the proposed Point of Interconnection and the substation/area. Identify whether the substation has a load tap changer.

1.2.3.10 Number of phases available at the proposed Point of Interconnection.

1.2.3.11 Limiting conductor ratings from the proposed Point of Interconnection to the distribution substation.

1.2.3.12 Based on the proposed Point of Interconnection, existing or known constraints such as, but not limited to, electrical dependencies at that location, short circuit interrupting capacity issues, power quality or stability issues on the circuit, capacity constraints, or secondary networks.

1.2.4 The pre-application report need only include existing data. A pre-application report request does not obligate the Transmission Provider to conduct a study or other analysis of the proposed generator in the event that data is not readily available. If the Transmission Provider cannot complete all or some of a pre-application report due to lack of available data, the Transmission Provider shall provide the Interconnection Customer with a pre-application report that includes the data that is available. The provision of information on "available capacity" pursuant to section 1.2.3.4 does not imply that an interconnection up to this level may be completed without impacts since there are many variables studied as part of the interconnection review process, and data provided in the pre-application report may become outdated at the time of the submission of the complete Interconnection Request. Notwithstanding any of the provisions of this section, the Transmission Provider shall, in good faith, include data in the pre-application report that represents that best available information at the time of reporting.

1.3 Interconnection Request

The Interconnection Customer shall submit its Interconnection Request to the Transmission Provider, together with the processing fee or deposit specified in the Interconnection Request. The Interconnection Request shall be date- and time-stamped upon receipt. The original date- and time-stamp applied to the Interconnection Request at the time of its original submission shall be accepted as the qualifying date- and time-stamp for the purposes of any timetable in these procedures. The Interconnection Customer shall be notified of receipt by the Transmission Provider within three Business Days of receiving the Interconnection Request. The Transmission Provider shall notify the Interconnection Customer within ten Business Days of the receipt of the Interconnection Request as to whether the Interconnection Request is complete or incomplete. If the Interconnection Request is incomplete, the Transmission

Provider shall provide along with the notice that the Interconnection Request is incomplete, a written list detailing all information that must be provided to complete the Interconnection Request. The Interconnection Customer will have ten Business Days after receipt of the notice to submit the listed information or to request an extension of time to provide such information. If the Interconnection Customer does not provide the listed information or a request for an extension of time within the deadline, the Interconnection Request will be deemed withdrawn. An Interconnection Request will be deemed complete upon submission of the listed information to the Transmission Provider.

1.4 Modification of the Interconnection Request

Any modification to machine data or equipment configuration or to the interconnection site of the Small Generating Facility not agreed to in writing by the Transmission Provider and the Interconnection Customer may be deemed a withdrawal of the Interconnection Request and may require submission of a new Interconnection Request, unless proper notification of each Party by the other and a reasonable time to cure the problems created by the changes are undertaken.

1.5 Site Control

Documentation of site control must be submitted with the Interconnection Request. Site control may be demonstrated through:

1.5.1 Ownership of, a leasehold interest in, or a right to develop a site for the purpose of constructing the Small Generating Facility;

1.5.2 An option to purchase or acquire a leasehold site for such purpose; or

1.5.3 An exclusivity or other business relationship between the Interconnection Customer and the entity having the right to sell, lease, or grant the Interconnection Customer the right to possess or occupy a site for such purpose.

1.6 Queue Position

The Transmission Provider shall assign a Queue Position based upon the date- and time-stamp of the Interconnection Request. The Queue Position of each Interconnection Request will be used to determine the cost responsibility for the Upgrades necessary to accommodate the interconnection. The Transmission Provider shall maintain a single queue per geographic region. At the Transmission Provider's option, Interconnection Requests may be studied serially or in clusters for the purpose of the system impact study.

1.7 Interconnection Requests Submitted Prior to the Effective Date of the SGIP
Nothing in this SGIP affects an Interconnection Customer's Queue Position assigned before the effective date of this SGIP. The Parties agree to complete work on any interconnection study agreement executed prior the effective date of this SGIP in accordance with the terms and conditions of that interconnection study agreement. Any new studies or other additional work will be completed pursuant to this SGIP.

Section 2. Fast Track Process

2.1 Applicability
The Fast Track Process is available to an Interconnection Customer proposing to interconnect its Small Generating Facility with the Transmission Provider's ~~Transmission~~ Distribution System if the Small Generating Facility's capacity does not exceed the limits identified in the table below, which vary according to the voltage of the line at the proposed Point of Interconnection. Small Generating Facilities located within 2.5 miles of a substation and on a main distribution line with minimum 600-ampere capacity are eligible for the Fast Track Process under the higher thresholds. In addition to the size threshold, ~~is no larger than 2 MW and if~~ the Interconnection Customer's proposed Small Generating Facility must meet~~s~~ the codes, standards, and certification requirements of Attachments 3 and 4 of these procedures, or the Transmission Provider has to have reviewed the design or tested the proposed Small Generating Facility and ~~is~~be satisfied that it is safe to operate.

Line Voltage	Fast Track Eligibility Regardless of Location	Fast Track Eligibility on ≥ 600 Ampere Line and ≤ 2.5 Miles from Substation
< 5 kilovolt (kV)	≤ 1 MW	≤ 2 MW
≥ 5 kV and < 15 kV	≤ 2 MW	≤ 3 MW
≥ 15 kV and < 30 kV	≤ 3 MW	≤ 4 MW
≥ 30 kV	≤ 4 MW	≤ 5 MW

2.2 Initial Review

Within 15 Business Days after the Transmission Provider notifies the Interconnection Customer it has received a complete Interconnection Request, the Transmission Provider shall perform an initial review using the screens set forth below, shall notify the Interconnection Customer of the results, and include with the notification copies of the analysis and data underlying the Transmission Provider's determinations under the screens.

2.2.1 Screens

2.2.1.1 The proposed Small Generating Facility's Point of Interconnection must be on a portion of the Transmission Provider's Distribution System that is subject to the Tariff.

2.2.1.2 For interconnection of a proposed Small Generating Facility to a radial distribution circuit, the aggregated generation, including the proposed Small Generating Facility, on the circuit shall not exceed 15 % of the line section annual peak load as most recently measured at the substation. A line section is that portion of a Transmission Provider's electric system connected to a customer bounded by automatic sectionalizing devices or the end of the distribution line.

2.2.1.3 For interconnection of a proposed Small Generating Facility to the load side of spot network protectors, the proposed Small Generating Facility must utilize an inverter-based equipment package and, together with the aggregated other inverter-based generation, shall not exceed the smaller of 5 %

of a spot network's maximum load or 50 kW[1].

2.2.1.4 The proposed Small Generating Facility, in aggregation with other generation on the distribution circuit, shall not contribute more than 10 % to the distribution circuit's maximum fault current at the point on the high voltage (primary) level nearest the proposed point of change of ownership.

2.2.1.5 The proposed Small Generating Facility, in aggregate with other generation on the distribution circuit, shall not cause any distribution protective devices and equipment (including, but not limited to, substation breakers, fuse cutouts, and line reclosers), or Interconnection Customer equipment on the system to exceed
87.5 % of the short circuit interrupting capability; nor shall the interconnection be proposed for a circuit that already exceeds
87.5 % of the short circuit interrupting capability.

2.2.1.6 Using the table below, determine the type of interconnection to a primary distribution line. This screen includes a review of the type of electrical service provided to the Interconnecting Customer, including line configuration and the transformer connection to limit the potential for creating over-voltages on the Transmission Provider's electric power system due to a loss of ground during the operating time of any anti-islanding function.

Primary Distribution Line Type	**Type of Interconnection to Primary Distribution Line**	**Result/Criteria**
Three-phase, three wire	3-phase or single phase, phase-to-phase	Pass screen

[1] A spot Network is a type of distribution system found within modern commercial buildings to provide high reliability of service to a single customer. (Standard Handbook for Electrical Engineers, 11th edition, Donald Fink, McGraw Hill Book Company)

Three-phase, four wire	Effectively-grounded 3 phase or Single-phase, line-to-neutral	Pass screen

2.2.1.7 If the proposed Small Generating Facility is to be interconnected on single-phase shared secondary, the aggregate generation capacity on the shared secondary, including the proposed Small Generating Facility, shall not exceed 20 kW.

2.2.1.8 If the proposed Small Generating Facility is single-phase and is to be interconnected on a center tap neutral of a 240 volt service, its addition shall not create an imbalance between the two sides of the 240 volt service of more than 20 % of the nameplate rating of the service transformer.

2.2.1.9 The Small Generating Facility, in aggregate with other generation interconnected to the transmission side of a substation transformer feeding the circuit where the Small Generating Facility proposes to interconnect shall not exceed 10 MW in an area where there are known, or posted, transient stability limitations to generating units located in the general electrical vicinity (e.g., three or four transmission busses from the point of interconnection).

2.2.1.10 No construction of facilities by the Transmission Provider on its own system shall be required to accommodate the Small Generating Facility.

2.2.2 If the proposed interconnection passes the screens, the Interconnection Request shall be approved and the Transmission Provider will provide the Interconnection Customer an executable interconnection agreement within five (5) Business Days after the determination.

2.2.3 If the proposed interconnection fails the screens, but the Transmission Provider determines that the Small Generating Facility may nevertheless be interconnected consistent with safety, reliability, and power quality standards, the Transmission Provider shall provide the Interconnection Customer an executable interconnection agreement within five (5) Business

Days after the determination.

2.2.4 If the proposed interconnection fails the screens, ~~but~~and the Transmission Provider ~~does not or~~ cannot determine from the initial review that the Small Generating Facility may nevertheless be interconnected consistent with safety, reliability, and power quality standards unless the Interconnection Customer is willing to consider minor modifications or further study, the Transmission Provider shall provide the Interconnection Customer with the opportunity to attend a customer options meeting.

2.3 Customer Options Meeting

If the Transmission Provider determines the Interconnection Request cannot be approved without minor modifications at minimal cost; or a supplemental study or other additional studies or actions; or at significant cost to address safety, reliability, or power quality problems, within the five Business Day period after the determination, the Transmission Provider shall notify the Interconnection Customer and provide copies of all data and analyses underlying its conclusion. Within ten (10) Business Days of the Transmission Provider's determination, the Transmission Provider shall offer to convene a customer options meeting with the Transmission Provider to review possible Interconnection Customer facility modifications or the screen analysis and related results, to determine what further steps are needed to permit the Small Generating Facility to be connected safely and reliably. At the time of notification of the Transmission Provider's determination, or at the customer options meeting, the Transmission Provider shall:

2.3.1 Offer to perform facility modifications or minor modifications to the Transmission Provider's electric system (e.g., changing meters, fuses, relay settings) and provide a non-binding good faith estimate of the limited cost to make such modifications to the Transmission Provider's electric system. If the Interconnection Customer agrees to pay for the modifications to the Transmission Provider's electric system, the Transmission Provider will provide the Interconnection Customer with an executable interconnection agreement within five (5) Business Days of the Customer Options Meeting; or

2.3.2 Offer to perform a supplemental review in accordance with section 2.4 ~~if the Transmission Provider concludes that the supplemental review might determine that the Small Generating Facility could continue to qualify for interconnection pursuant to the Fast Track Process, and provide a non-binding good faith estimate of the costs of such review~~; or

2.3.3 Obtain the Interconnection Customer's agreement to continue evaluating the Interconnection Request under the section 3 Study Process.

2.4 Supplemental Review

If the Interconnection Customer agrees to a supplemental review, the Interconnection Customer shall agree in writing within fifteen (15) Business Days of the offer, and submit ~~a deposit for the estimated costs~~ the nonrefundable supplemental review fee of $2,500 to the Transmission Provider, or the Interconnection Request shall be deemed withdrawn. ~~The Interconnection Customer shall be responsible for the Transmission Provider's actual costs for conducting the supplemental review. The Interconnection Customer must pay any review costs that exceed the deposit within 20 Business Days of receipt of the invoice or resolution of any dispute. If the deposit exceeds the invoiced costs, the Transmission Provider will return such excess within 20 Business Days of the invoice without interest.~~

2.4.1 Within twenty (20) Business Days following receipt of the ~~deposit for a~~ supplemental review fee, the Transmission Provider ~~will determine if the Small Generating Facility can be interconnected safely and reliably~~shall perform a supplemental review using the screens set forth below, shall notify the Interconnection Customer of the results, and include with the notification copies of the analysis and data underlying the Transmission Provider's determinations under the screens.

2.4.1.1 ~~If so, the Transmission Provider shall forward an executable interconnection agreement to the Interconnection Customer within five Business Days~~Where twelve (12) months of line section minimum load data is available, can be calculated, can be estimated from existing data, or determined from a power flow model, the aggregate Generating Facility capacity on the line section is less than 100% of the minimum load for all line sections bounded by automatic sectionalizing devices upstream of the proposed Small Generating Facility. If minimum load data is not available, or cannot be calculated, estimated or determined, the Transmission Provider shall include the reason(s) that it is unable to calculate, estimate or determine minimum load in its supplemental review results notification under section 2.4.1.

2.4.1.1.1 The type of generation used by the proposed Small Generating Facility will be taken into account when calculating, estimating, or determining circuit or line section minimum load relevant for the application of screen 2.4.1.1. Solar photovoltaic (PV) generation systems with no battery storage use daytime minimum load (i.e. 10 a.m. to 4 p.m. for fixed panel systems and 8 a.m. to 6 p.m. for PV systems utilizing tracking systems), while all other generation uses absolute minimum load.

2.4.1.1.2 When this screen is being applied to a Small Generating Facility that serves some onsite electrical load, only the net export in kW, if known, that may flow into the Transmission Provider's system will be considered as part of the aggregate generation.

2.4.1.1.3 Transmission Provider will not consider as part of the aggregate generation for purposes of this screen generating facility capacity known to be already reflected in the minimum load data.

2.4.1.2 In aggregate with existing generation on the line section: (1) the voltage regulation on the line section can be maintained in compliance with relevant requirements under all system conditions; (2) the voltage fluctuation is within acceptable limits as defined by Institute of Electrical and Electronics Engineers (IEEE) Standard 1453, or utility practice similar to IEEE Standard 1453; and (3) the harmonic levels meet IEEE Standard 519 limits at the Point of Interconnection.

2.4.1.3 The location of the proposed Small Generating Facility and the aggregate generation capacity on the line section do not create impacts to safety or reliability that cannot be adequately addressed without application of the Study Process. The Transmission Provider shall give due consideration to the following and other factors in determining potential impacts to safety and reliability in

applying this screen.

2.4.1.3.1 Whether the line section has significant minimum loading levels dominated by a small number of customers (e.g. several large commercial customers).

2.4.1.3.2 Whether there is an even or uneven distribution of loading along the line section.

2.4.1.3.3 Whether the proposed Small Generating Facility is located in close proximity to the substation (i.e. less than 2.5 electrical line miles), and whether the line section from the substation to the Point of Interconnection is composed of large conductor cable (i.e. 600-ampere class cable).

2.4.1.3.4 Whether the proposed Small Generating Facility incorporates a time delay function to prevent reconnection of the generator to the system until system voltage and frequency are within normal limits for a prescribed time.

2.4.1.3.5 Whether operational flexibility is reduced by the proposed Small Generating Facility, such that transfer of the line section(s) of the Small Generating Facility to a neighboring distribution circuit/substation may trigger overloads or voltage issues.

2.4.1.3.6 Whether the proposed Small Generating Facility employs equipment or systems certified by a recognized standards organization to address technical issues such as, but not limited to, islanding, reverse power flow, or voltage quality.

2.4.2 If the proposed interconnection passes the supplemental screens in sections 2.4.1.1, 2.4.1.2, and 2.4.1.3 above, the Interconnection Request shall be

approved and the Transmission Provider will provide the Interconnection Customer with an executable interconnection agreement within the timeframes established in this section 2.4.2. If the proposed interconnection requires no construction of facilities by the Transmission Provider on its own system, the interconnection agreement shall be provided within five (5) Business Days after the notification of the supplemental review results. If the proposed interconnection requires only interconnection facilities or minor modifications to the Transmission Provider's system, the interconnection agreement, along with a non-binding good faith estimate for the interconnection facilities and/or minor modifications, shall be provided to the Interconnection Customer within fifteen (15) Business Days after notification of the supplemental review results. If the proposed interconnection requires more than minor modifications to the Transmission Provider's system, the Transmission Provider shall notify the Interconnection Customer, at the same time it notifies the Interconnection Customer with the supplemental review results, that the Interconnection Request may continue to be evaluated under the section 3 Study Process.

~~2.4.1.2 If so, and Interconnection Customer facility modifications are required to allow the Small Generating Facility to be interconnected consistent with safety, reliability, and power quality standards under these procedures, the Transmission Provider shall forward an executable interconnection agreement to the Interconnection Customer within five Business Days after confirmation that the Interconnection Customer has agreed to make the necessary changes at the Interconnection Customer's cost.~~

~~2.4.1.3 If so, and minor modifications to the Transmission Provider's electric system are required to allow the Small Generating Facility to be interconnected consistent with safety, reliability, and power quality standards under the Fast Track Process, the Transmission Provider shall forward an executable interconnection agreement to the Interconnection Customer within ten Business Days that requires the Interconnection Customer to pay the costs of such system modifications prior to interconnection.~~

~~2.4.1.4 If not, the Interconnection Request will continue to be~~

~~evaluated under the section 3 Study Process.~~

Section 3. Study Process

3.1 Applicability

The Study Process shall be used by an Interconnection Customer proposing to interconnect its Small Generating Facility with the Transmission Provider's Transmission System or Distribution System if the Small Generating Facility (1) is ~~larger than 2 MW but~~ no larger than 20 MW and does not meet the eligibility requirements of section 2.1, (2) is not certified, or (3) is certified but did not pass the Fast Track Process or the 10 kW Inverter Process.

3.2 Scoping Meeting

3.2.1 A scoping meeting will be held within ten Business Days after the Interconnection Request is deemed complete, or as otherwise mutually agreed to by the Parties. The Transmission Provider and the Interconnection Customer will bring to the meeting personnel, including system engineers and other resources as may be reasonably required to accomplish the purpose of the meeting.

3.2.2 The purpose of the scoping meeting is to discuss the Interconnection Request and review existing studies relevant to the Interconnection Request. The Parties shall further discuss whether the Transmission Provider should perform a feasibility study or proceed directly to a system impact study, or a facilities study, or an interconnection agreement. If the Parties agree that a feasibility study should be performed, the Transmission Provider shall provide the Interconnection Customer, as soon as possible, but not later than five Business Days after the scoping meeting, a feasibility study agreement (Attachment 6) including an outline of the scope of the study and a non-binding good faith estimate of the cost to perform the study.

3.2.3 The scoping meeting may be omitted by mutual agreement. In order to remain in consideration for interconnection, an Interconnection Customer who has requested a feasibility study must return the executed feasibility study agreement within 15 Business Days. If the Parties agree not to perform a feasibility study, the Transmission Provider shall provide the Interconnection Customer, no later than five Business Days after the

scoping meeting, a system impact study agreement (Attachment 7) including an outline of the scope of the study and a non-binding good faith estimate of the cost to perform the study.

3.3 Feasibility Study

3.3.1 The feasibility study shall identify any potential adverse system impacts that would result from the interconnection of the Small Generating Facility.

3.3.2 A deposit of the lesser of 50 percent of the good faith estimated feasibility study costs or earnest money of $1,000 may be required from the Interconnection Customer.

3.3.3 The scope of and cost responsibilities for the feasibility study are described in the attached feasibility study agreement (Attachment 6).

3.3.4 If the feasibility study shows no potential for adverse system impacts, the Transmission Provider shall send the Interconnection Customer a facilities study agreement, including an outline of the scope of the study and a non-binding good faith estimate of the cost to perform the study. If no additional facilities are required, the Transmission Provider shall send the Interconnection Customer an executable interconnection agreement within five Business Days.

3.3.5 If the feasibility study shows the potential for adverse system impacts, the review process shall proceed to the appropriate system impact study(s).

3.4 System Impact Study

3.4.1 A system impact study shall identify and detail the electric system impacts that would result if the proposed Small Generating Facility were interconnected without project modifications or electric system modifications, focusing on the adverse system impacts identified in the feasibility study, or to study potential impacts, including but not limited to those identified in the scoping meeting. A system impact study shall evaluate the impact of the proposed interconnection on the reliability of the electric system.

3.4.2 If no transmission system impact study is required, but potential electric power Distribution System adverse system impacts are identified in the scoping meeting or shown in the feasibility study, a distribution system

impact study must be performed. The Transmission Provider shall send the Interconnection Customer a distribution system impact study agreement within 15 Business Days of transmittal of the feasibility study report, including an outline of the scope of the study and a non-binding good faith estimate of the cost to perform the study, or following the scoping meeting if no feasibility study is to be performed.

3.4.3 In instances where the feasibility study or the distribution system impact study shows potential for transmission system adverse system impacts, within five Business Days following transmittal of the feasibility study report, the Transmission Provider shall send the Interconnection Customer a transmission system impact study agreement, including an outline of the scope of the study and a non-binding good faith estimate of the cost to perform the study, if such a study is required.

3.4.4 If a transmission system impact study is not required, but electric power Distribution System adverse system impacts are shown by the feasibility study to be possible and no distribution system impact study has been conducted, the Transmission Provider shall send the Interconnection Customer a distribution system impact study agreement.

3.4.5 If the feasibility study shows no potential for transmission system or Distribution System adverse system impacts, the Transmission Provider shall send the Interconnection Customer either a facilities study agreement (Attachment 8), including an outline of the scope of the study and a non-binding good faith estimate of the cost to perform the study, or an executable interconnection agreement, as applicable.

3.4.6 In order to remain under consideration for interconnection, the Interconnection Customer must return executed system impact study agreements, if applicable, within 30 Business Days.

3.4.7 A deposit of the good faith estimated costs for each system impact study may be required from the Interconnection Customer.

3.4.8 The scope of and cost responsibilities for a system impact study are described in the attached system impact study agreement.

3.4.9 Where transmission systems and Distribution Systems have separate owners, such as is the case with transmission-dependent utilities ("TDUs") – whether investor-owned or not – the Interconnection Customer may apply

to the nearest Transmission Provider (Transmission Owner, Regional Transmission Operator, or Independent Transmission Provider) providing transmission service to the TDU to request project coordination. Affected Systems shall participate in the study and provide all information necessary to prepare the study.

3.5 Facilities Study

3.5.1 Once the required system impact study(s) is completed, a system impact study report shall be prepared and transmitted to the Interconnection Customer along with a facilities study agreement within five Business Days, including an outline of the scope of the study and a non-binding good faith estimate of the cost to perform the facilities study. In the case where one or both impact studies are determined to be unnecessary, a notice of the fact shall be transmitted to the Interconnection Customer within the same timeframe.

3.5.2 In order to remain under consideration for interconnection, or, as appropriate, in the Transmission Provider's interconnection queue, the Interconnection Customer must return the executed facilities study agreement or a request for an extension of time within 30 Business Days.

3.5.3 The facilities study shall specify and estimate the cost of the equipment, engineering, procurement and construction work (including overheads) needed to implement the conclusions of the system impact study(s).

3.5.4 Design for any required Interconnection Facilities and/or Upgrades shall be performed under the facilities study agreement. The Transmission Provider may contract with consultants to perform activities required under the facilities study agreement. The Interconnection Customer and the Transmission Provider may agree to allow the Interconnection Customer to separately arrange for the design of some of the Interconnection Facilities. In such cases, facilities design will be reviewed and/or modified prior to acceptance by the Transmission Provider, under the provisions of the facilities study agreement. If the Parties agree to separately arrange for design and construction, and provided security and confidentiality requirements can be met, the Transmission Provider shall make sufficient information available to the Interconnection Customer in accordance with confidentiality and critical infrastructure requirements to permit the Interconnection Customer to obtain an independent design and cost

estimate for any necessary facilities.

3.5.5 A deposit of the good faith estimated costs for the facilities study may be required from the Interconnection Customer.

3.5.6 The scope of and cost responsibilities for the facilities study are described in the attached facilities study agreement.

3.5.7 Upon completion of the facilities study, and with the agreement of the Interconnection Customer to pay for Interconnection Facilities and Upgrades identified in the facilities study, the Transmission Provider shall provide the Interconnection Customer an executable interconnection agreement within five Business Days.

Section 4. Provisions that Apply to All Interconnection Requests

4.1 Reasonable Efforts

The Transmission Provider shall make reasonable efforts to meet all time frames provided in these procedures unless the Transmission Provider and the Interconnection Customer agree to a different schedule. If the Transmission Provider cannot meet a deadline provided herein, it shall notify the Interconnection Customer, explain the reason for the failure to meet the deadline, and provide an estimated time by which it will complete the applicable interconnection procedure in the process.

4.2 Disputes

4.2.1 The Parties agree to attempt to resolve all disputes arising out of the interconnection process according to the provisions of this article.

4.2.2 In the event of a dispute, either Party shall provide the other Party with a written Notice of Dispute. Such Notice shall describe in detail the nature of the dispute.

4.2.3 If the dispute has not been resolved within two Business Days after receipt of the Notice, either Party may contact FERC's Dispute Resolution Service (DRS) for assistance in resolving the dispute.

4.2.4 The DRS will assist the Parties in either resolving their dispute or in selecting an appropriate dispute resolution venue (e.g., mediation, settlement judge, early

neutral evaluation, or technical expert) to assist the Parties in resolving their dispute. DRS can be reached at 1-877-337-2237 or via the internet at http://www.ferc.gov/legal/adr.asp.

4.2.5 Each Party agrees to conduct all negotiations in good faith and will be responsible for one-half of any costs paid to neutral third-parties.

4.2.6 If neither Party elects to seek assistance from the DRS, or if the attempted dispute resolution fails, then either Party may exercise whatever rights and remedies it may have in equity or law consistent with the terms of these procedures.

4.3 Interconnection Metering

Any metering necessitated by the use of the Small Generating Facility shall be installed at the Interconnection Customer's expense in accordance with Federal Energy Regulatory Commission, state, or local regulatory requirements or the Transmission Provider's specifications.

4.4 Commissioning

Commissioning tests of the Interconnection Customer's installed equipment shall be performed pursuant to applicable codes and standards. The Transmission Provider must be given at least five Business Days written notice, or as otherwise mutually agreed to by the Parties, of the tests and may be present to witness the commissioning tests.

4.5. Confidentiality

4.5.1 Confidential information shall mean any confidential and/or proprietary information provided by one Party to the other Party that is clearly marked or otherwise designated "Confidential." For purposes of these procedures all design, operating specifications, and metering data provided by the Interconnection Customer shall be deemed confidential information regardless of whether it is clearly marked or otherwise designated as such.

4.5.2 Confidential Information does not include information previously in the public domain, required to be publicly submitted or divulged by Governmental Authorities (after notice to the other Party and after exhausting any opportunity to oppose such publication or release), or necessary to be divulged in an action to enforce these procedures. Each Party receiving Confidential Information shall hold such information in confidence and shall not disclose it to any third party nor to the public

without the prior written authorization from the Party providing that information, except to fulfill obligations under these procedures, or to fulfill legal or regulatory requirements.

4.5.2.1 Each Party shall employ at least the same standard of care to protect Confidential Information obtained from the other Party as it employs to protect its own Confidential Information.

4.5.2.2 Each Party is entitled to equitable relief, by injunction or otherwise, to enforce its rights under this provision to prevent the release of Confidential Information without bond or proof of damages, and may seek other remedies available at law or in equity for breach of this provision.

4.5.3 Notwithstanding anything in this article to the contrary, and pursuant to 18 CFR § 1b.20, if FERC, during the course of an investigation or otherwise, requests information from one of the Parties that is otherwise required to be maintained in confidence pursuant to these procedures, the Party shall provide the requested information to FERC, within the time provided for in the request for information. In providing the information to FERC, the Party may, consistent with 18 CFR § 388.112, request that the information be treated as confidential and non-public by FERC and that the information be withheld from public disclosure. Parties are prohibited from notifying the other Party prior to the release of the Confidential Information to FERC. The Party shall notify the other Party when it is notified by FERC that a request to release Confidential Information has been received by FERC, at which time either of the Parties may respond before such information would be made public, pursuant to 18 CFR § 388.112. Requests from a state regulatory body conducting a confidential investigation shall be treated in a similar manner if consistent with the applicable state rules and regulations.

4.6 Comparability

The Transmission Provider shall receive, process and analyze all Interconnection Requests in a timely manner as set forth in this document. The Transmission Provider shall use the same reasonable efforts in processing and analyzing Interconnection Requests from all Interconnection Customers, whether the Small Generating Facility is owned or operated by the Transmission Provider, its subsidiaries or affiliates, or others.

4.7 Record Retention

The Transmission Provider shall maintain for three years records, subject to audit, of all Interconnection Requests received under these procedures, the times required to complete Interconnection Request approvals and disapprovals, and justification for the actions taken on the Interconnection Requests.

4.8 Interconnection Agreement

After receiving an interconnection agreement from the Transmission Provider, the Interconnection Customer shall have 30 Business Days or another mutually agreeable timeframe to sign and return the interconnection agreement and agree to pay for Interconnection Facilities and Upgrades, if any, or request that the Transmission Provider file an unexecuted interconnection agreement with the Federal Energy Regulatory Commission. If the Interconnection Customer does not sign the interconnection agreement, or ask that it be filed unexecuted by the Transmission Provider within 30 Business Days, the Interconnection Request shall be deemed withdrawn. After the interconnection agreement is signed by the Parties, the interconnection of the Small Generating Facility shall proceed under the provisions of the interconnection agreement.

4.9 Coordination with Affected Systems

The Transmission Provider shall coordinate the conduct of any studies required to determine the impact of the Interconnection Request on Affected Systems with Affected System operators and, if possible, include those results (if available) in its applicable interconnection study within the time frame specified in these procedures. The Transmission Provider will include such Affected System operators in all meetings held with the Interconnection Customer as required by these procedures. The Interconnection Customer will cooperate with the Transmission Provider in all matters related to the conduct of studies and the determination of modifications to Affected Systems. A Transmission Provider which may be an Affected System shall cooperate with the Transmission Provider with whom interconnection has been requested in all matters related to the conduct of studies and the determination of modifications to Affected Systems.

4.10 Capacity of the Small Generating Facility

4.10.1 If the Interconnection Request is for an increase in capacity for an existing Small Generating Facility, the Interconnection Request shall be evaluated on the basis of the new total capacity of the Small Generating Facility.

4.10.2 If the Interconnection Request is for a Small Generating Facility that

includes multiple energy production devices at a site for which the Interconnection Customer seeks a single Point of Interconnection, the Interconnection Request shall be evaluated on the basis of the aggregate capacity of the multiple devices.

4.10.3 The Interconnection Request shall be evaluated using the maximum rated capacity of the Small Generating Facility.

Attachment 1

Glossary of Terms

10 kW Inverter Process – The procedure for evaluating an Interconnection Request for a certified inverter-based Small Generating Facility no larger than 10 kW that uses the section 2 screens. The application process uses an all-in-one document that includes a simplified Interconnection Request, simplified procedures, and a brief set of terms and conditions. See SGIP Attachment 5.

Affected System – An electric system other than the Transmission Provider's Transmission System that may be affected by the proposed interconnection.

Business Day – Monday through Friday, excluding Federal Holidays.

Distribution System – The Transmission Provider's facilities and equipment used to transmit electricity to ultimate usage points such as homes and industries directly from nearby generators or from interchanges with higher voltage transmission networks which transport bulk power over longer distances. The voltage levels at which Distribution Systems operate differ among areas.

Distribution Upgrades – The additions, modifications, and upgrades to the Transmission Provider's Distribution System at or beyond the Point of Interconnection to facilitate interconnection of the Small Generating Facility and render the transmission service necessary to effect the Interconnection Customer's wholesale sale of electricity in interstate commerce. Distribution Upgrades do not include Interconnection Facilities.

Fast Track Process – The procedure for evaluating an Interconnection Request for a certified Small Generating Facility ~~no larger than 2 MW~~ that meets the eligibility requirements of section 2.1 and includes the section 2 screens, customer options meeting, and optional supplemental review.

Good Utility Practice – Any of the practices, methods and acts engaged in or approved by a significant portion of the electric industry during the relevant time period, or any of the practices, methods and act which, in the exercise of reasonable judgment in light of the facts known at the time the decision was made, could have been expected to accomplish the desired result at a reasonable cost consistent with good business practices, reliability, safety and expedition. Good Utility Practice is not intended to be limited to the optimum practice, method, or act to the exclusion of all others, but rather to be acceptable practices, methods, or acts generally accepted in the region.

Interconnection Customer – Any entity, including the Transmission Provider, the Transmission Owner or any of the affiliates or subsidiaries of either, that proposes to interconnect its Small Generating Facility with the Transmission Provider's Transmission

System.

Interconnection Facilities – The Transmission Provider's Interconnection Facilities and the Interconnection Customer's Interconnection Facilities. Collectively, Interconnection Facilities include all facilities and equipment between the Small Generating Facility and the Point of Interconnection, including any modification, additions or upgrades that are necessary to physically and electrically interconnect the Small Generating Facility to the Transmission Provider's Transmission System. Interconnection Facilities are sole use facilities and shall not include Distribution Upgrades or Network Upgrades.

Interconnection Request – The Interconnection Customer's request, in accordance with the Tariff, to interconnect a new Small Generating Facility, or to increase the capacity of, or make a Material Modification to the operating characteristics of, an existing Small Generating Facility that is interconnected with the Transmission Provider's Transmission System.

Material Modification – A modification that has a material impact on the cost or timing of any Interconnection Request with a later queue priority date.

Network Resource – Any designated generating resource owned, purchased, or leased by a Network Customer under the Network Integration Transmission Service Tariff. Network Resources do not include any resource, or any portion thereof, that is committed for sale to third parties or otherwise cannot be called upon to meet the Network Customer's Network Load on a non-interruptible basis.

Network Resource Interconnection Service – An Interconnection Service that allows the Interconnection Customer to integrate its Generating Facility with the Transmission Provider's System (1) in a manner comparable to that in which the Transmission Provider integrates its generating facilities to serve native load customers; or (2) in an RTO or ISO with market based congestion management, in the same manner as Network Resources. Network Resource Interconnection Service in and of itself does not convey transmission service.

Network Upgrades – Additions, modifications, and upgrades to the Transmission Provider's Transmission System required at or beyond the point at which the Small Generating Facility interconnects with the Transmission Provider's Transmission System to accommodate the interconnection with the Small Generating Facility to the Transmission Provider's Transmission System. Network Upgrades do not include Distribution Upgrades.

Party or Parties – The Transmission Provider, Transmission Owner, Interconnection Customer or any combination of the above.

Point of Interconnection – The point where the Interconnection Facilities connect with the Transmission Provider's Distribution System or Transmission System.

Queue Position – The order of a valid Interconnection Request, relative to all other pending valid Interconnection Requests, that is established based upon the date and time of receipt of the valid Interconnection Request by the Transmission Provider.

Small Generating Facility – The Interconnection Customer's device for the production of electricity identified in the Interconnection Request, but shall not include the Interconnection Customer's Interconnection Facilities.

Study Process – The procedure for evaluating an Interconnection Request that includes the section 3 scoping meeting, feasibility study, system impact study, and facilities study.

Transmission Owner – The entity that owns, leases or otherwise possesses an interest in the portion of the Transmission System at the Point of Interconnection and may be a Party to the Small Generator Interconnection Agreement to the extent necessary.

Transmission Provider – The public utility (or its designated agent) that owns, controls, or operates transmission or distribution facilities used for the transmission of electricity in interstate commerce and provides transmission service under the Tariff. The term Transmission Provider should be read to include the Transmission Owner when the Transmission Owner is separate from the Transmission Provider.

Transmission System – The facilities owned, controlled or operated by the Transmission Provider or the Transmission Owner that are used to provide transmission service under the Tariff.

Upgrades – The required additions and modifications to the Transmission Provider's Transmission System at or beyond the Point of Interconnection. Upgrades may be Network Upgrades or Distribution Upgrades. Upgrades do not include Interconnection Facilities.

Attachment 2

SMALL GENERATOR INTERCONNECTION REQUEST
(Application Form)

Transmission Provider: _____

Designated Contact Person: _____

Address: _____

Telephone Number: _____

Fax: _____

E-Mail Address: _____

An Interconnection Request is considered complete when it provides all applicable and correct information required below. Per SGIP section 1.5, documentation of site control must be submitted with the Interconnection Request.

Preamble and Instructions

An Interconnection Customer who requests a Federal Energy Regulatory Commission jurisdictional interconnection must submit this Interconnection Request by hand delivery, mail, e-mail, or fax to the Transmission Provider.

Processing Fee or Deposit:

If the Interconnection Request is submitted under the Fast Track Process, the non-refundable processing fee is $500.

If the Interconnection Request is submitted under the Study Process, whether a new submission or an Interconnection Request that did not pass the Fast Track Process, the Interconnection Customer shall submit to the Transmission Provider a deposit not to exceed $1,000 towards the cost of the feasibility study.

Interconnection Customer Information

Legal Name of the Interconnection Customer (or, if an individual, individual's name)

Name: _____

Contact Person: _____

Mailing Address: _____

City: _____ State: _____ Zip: _____

Facility Location (if different from above): _____

Telephone (Day): _____ Telephone (Evening): _____

Fax: _____ E-Mail Address: _____

Alternative Contact Information (if different from the Interconnection Customer)

Contact Name: _____

Title: _____

Address: _____

_____

Telephone (Day): _____ Telephone (Evening): _____

Fax: _____ E-Mail Address: _____

Application is for: _____New Small Generating Facility

_____Capacity addition to Existing Small Generating Facility

If capacity addition to existing facility, please describe: _____

_____

Will the Small Generating Facility be used for any of the following?

Net Metering? Yes ___ No ___
To Supply Power to the Interconnection Customer? Yes ___No ___
To Supply Power to Others? Yes ____ No ____

For installations at locations with existing electric service to which the proposed Small Generating Facility will interconnect, provide:

_____ _____
(Local Electric Service Provider*) (Existing Account Number*)

[*To be provided by the Interconnection Customer if the local electric service provider is different from the Transmission Provider]

Contact Name: _____

Title: _____

Address: _____

_____

Telephone (Day): _____ Telephone (Evening): _____

Fax: _____ E-Mail Address: _____

Requested Point of Interconnection: _____

Interconnection Customer's Requested In-Service Date: _____

Small Generating Facility Information

Data apply only to the Small Generating Facility, not the Interconnection Facilities.

Energy Source: ___ Solar ___ Wind ___ Hydro ___ Hydro Type (e.g. Run-of-River):_____
Diesel ___ Natural Gas ___ Fuel Oil ___ Other (state type) _____

Prime Mover: ___Fuel Cell ___Recip Engine ___Gas Turb ___Steam Turb
___Microturbine ___PV ___Other

Type of Generator: ____Synchronous ____Induction ____ Inverter

Generator Nameplate Rating: _____kW (Typical) Generator Nameplate kVAR: _____

Interconnection Customer or Customer-Site Load: _____kW (if none, so state)

Typical Reactive Load (if known): _____

Maximum Physical Export Capability Requested: _____ kW

List components of the Small Generating Facility equipment package that are currently certified:

Equipment Type	Certifying Entity
1. _____	_____
2. _____	_____
3. _____	_____
4. _____	_____
5. _____	_____

Is the prime mover compatible with the certified protective relay package? ____Yes ____No

Generator (or solar collector)
Manufacturer, Model Name & Number: _____
Version Number: _____

Nameplate Output Power Rating in kW: (Summer) _____ (Winter) _____
Nameplate Output Power Rating in kVA: (Summer) _____ (Winter) _____

Individual Generator Power Factor
Rated Power Factor: Leading: _____Lagging: _____

Total Number of Generators in wind farm to be interconnected pursuant to this
Interconnection Request: _____ Elevation: _____ ___Single phase ___Three phase

Inverter Manufacturer, Model Name & Number (if used): _____

List of adjustable set points for the protective equipment or software: _____

Note: A completed Power Systems Load Flow data sheet must be supplied with the Interconnection Request.

Small Generating Facility Characteristic Data (for inverter-based machines)

Max design fault contribution current: _____ Instantaneous ___ or RMS? _

Harmonics Characteristics: _____

Start-up requirements: _____

Small Generating Facility Characteristic Data (for rotating machines)

RPM Frequency: _____
(*) Neutral Grounding Resistor (If Applicable): _____

Synchronous Generators:

Direct Axis Synchronous Reactance, Xd: _____ P.U.
Direct Axis Transient Reactance, X'_d: _____P.U.
Direct Axis Subtransient Reactance, X''_d: _____P.U.
Negative Sequence Reactance, X_2: _____ P.U.
Zero Sequence Reactance, X_0: _____ P.U.

KVA Base: _____
Field Volts: _____
Field Amperes: _____

Induction Generators:

Motoring Power (kW): _____
I_2^2t or K (Heating Time Constant): _____
Rotor Resistance, Rr: _____
Stator Resistance, Rs: _____
Stator Reactance, Xs: _____
Rotor Reactance, Xr: _____
Magnetizing Reactance, Xm: _____
Short Circuit Reactance, Xd": _____
Exciting Current: _____
Temperature Rise: _____
Frame Size: _____
Design Letter: _____
Reactive Power Required In Vars (No Load): _____
Reactive Power Required In Vars (Full Load): _____
Total Rotating Inertia, H: _____ Per Unit on kVA Base

Note: Please contact the Transmission Provider prior to submitting the Interconnection Request to determine if the specified information above is required.

Excitation and Governor System Data for Synchronous Generators Only

Provide appropriate IEEE model block diagram of excitation system, governor system and power system stabilizer (PSS) in accordance with the regional reliability council criteria. A PSS may be determined to be required by applicable studies. A copy of the manufacturer's block diagram may not be substituted.

Interconnection Facilities Information

Will a transformer be used between the generator and the point of common coupling? ___Yes ___No

Will the transformer be provided by the Interconnection Customer? ____Yes ____No

Transformer Data (If Applicable, for Interconnection Customer-Owned Transformer):

Is the transformer: ____single phase _____three phase? Size: _____kVA
Transformer Impedance: _____% on _____kVA Base

If Three Phase:
Transformer Primary: _____ Volts _____ Delta _____Wye _____ Wye Grounded
Transformer Secondary: _____ Volts _____ Delta _____Wye _____ Wye Grounded
Transformer Tertiary: _____ Volts _____ Delta _____Wye _____ Wye Grounded

Transformer Fuse Data (If Applicable, for Interconnection Customer-Owned Fuse):

(Attach copy of fuse manufacturer's Minimum Melt and Total Clearing Time-Current Curves)

Manufacturer: _____ Type: _____ Size: _____Speed: _____

Interconnecting Circuit Breaker (if applicable):

Manufacturer: _____ Type: _____
Load Rating (Amps): _____ Interrupting Rating (Amps): _____ Trip Speed (Cycles): _____

Interconnection Protective Relays (If Applicable):

If Microprocessor-Controlled:

List of Functions and Adjustable Setpoints for the protective equipment or software:

Setpoint Function	Minimum	Maximum
1. _____	_____	_____
2. _____	_____	_____
3. _____	_____	_____
4. _____	_____	_____
5. _____	_____	_____
6. _____	_____	_____

If Discrete Components:

(Enclose Copy of any Proposed Time-Overcurrent Coordination Curves)

Manufacturer: _____ Type: _____ Style/Catalog No.: _____ Proposed Setting: _____
Manufacturer: _____ Type: _____ Style/Catalog No.: _____ Proposed Setting: _____
Manufacturer: _____ Type: _____ Style/Catalog No.: _____ Proposed Setting: _____
Manufacturer: _____ Type: _____ Style/Catalog No.: _____ Proposed Setting: _____
Manufacturer: _____ Type: _____ Style/Catalog No.: _____ Proposed Setting: _____

Current Transformer Data (If Applicable):

(Enclose Copy of Manufacturer's Excitation and Ratio Correction Curves)

Manufacturer: _____
Type: _____ Accuracy Class: ___ Proposed Ratio Connection: ____

Manufacturer: _____
Type: _____ Accuracy Class: ___ Proposed Ratio Connection: ____

Potential Transformer Data (If Applicable):

Manufacturer: _____
Type: _____ Accuracy Class: ___ Proposed Ratio Connection: ____

Manufacturer: _____
Type: _____ Accuracy Class: ___ Proposed Ratio Connection: ____

General Information

Enclose copy of site electrical one-line diagram showing the configuration of all Small Generating Facility equipment, current and potential circuits, and protection and control schemes. This one-line diagram must be signed and stamped by a licensed Professional Engineer if the Small Generating Facility is larger than 50 kW. Is One-Line Diagram Enclosed? ____Yes ____No

Enclose copy of any site documentation that indicates the precise physical location of the proposed Small Generating Facility (e.g., USGS topographic map or other diagram or documentation).

Proposed location of protective interface equipment on property (include address if different from the Interconnection Customer's address) _____

Enclose copy of any site documentation that describes and details the operation of the protection and control schemes. Is Available Documentation Enclosed? ___Yes ____No

Enclose copies of schematic drawings for all protection and control circuits, relay current circuits, relay potential circuits, and alarm/monitoring circuits (if applicable).
Are Schematic Drawings Enclosed? ___Yes ____No

Applicant Signature

I hereby certify that, to the best of my knowledge, all the information provided in this Interconnection Request is true and correct.

For Interconnection Customer: _____Date:_____

Attachment 3

Certification Codes and Standards

IEEE1547 Standard for Interconnecting Distributed Resources with Electric Power Systems (including use of IEEE 1547.1 testing protocols to establish conformity)
UL 1741 Inverters, Converters, and Controllers for Use in Independent Power Systems
IEEE Std 929–2000 IEEE Recommended Practice for Utility Interface of Photovoltaic (PV) Systems
NFPA 70 (2002), National Electrical Code
IEEE Std C37.90.1–1989 (R1994), IEEE Standard Surge Withstand Capability (SWC) Tests for Protective Relays and Relay Systems
IEEE Std C37.90.2 (1995), IEEE Standard Withstand Capability of Relay Systems to Radiated Electromagnetic Interference from Transceivers
IEEE Std C37.108–1989 (R2002), IEEE Guide for the Protection of Network Transformers
IEEE Std C57.12.44–2000, IEEE Standard Requirements for Secondary Network Protectors
IEEE Std C62.41.2–2002, IEEE Recommended Practice on Characterization of Surges in Low Voltage (1000V and Less) AC Power Circuits
IEEE Std C62.45–1992 (R2002), IEEE Recommended Practice on Surge Testing for Equipment Connected to Low-Voltage (1000V and Less) AC Power Circuits
ANSI C84.1–1995 Electric Power Systems and Equipment—Voltage Ratings (60 Hertz)
IEEE Std 100–2000, IEEE Standard Dictionary of Electrical and Electronic Terms
NEMA MG 1–1998, Motors and Small Resources, Revision 3
IEEE Std 519–1992, IEEE Recommended Practices and Requirements for Harmonic Control in Electrical Power Systems
NEMA MG 1–2003 (Rev 2004), Motors and Generators, Revision 1

Attachment 4

Certification of Small Generator Equipment Packages

1.0 Small Generating Facility equipment proposed for use separately or packaged with other equipment in an interconnection system shall be considered certified for interconnected operation if (1) it has been tested in accordance with industry standards for continuous utility interactive operation in compliance with the appropriate codes and standards referenced below by any Nationally Recognized Testing Laboratory (NRTL) recognized by the United States Occupational Safety and Health Administration to test and certify interconnection equipment pursuant to the relevant codes and standards listed in SGIP Attachment 3, (2) it has been labeled and is publicly listed by such NRTL at the time of the interconnection application, and (3) such NRTL makes readily available for verification all test standards and procedures it utilized in performing such equipment certification, and, with consumer approval, the test data itself. The NRTL may make such information available on its Web site and by encouraging such information to be included in the manufacturer's literature accompanying the equipment.

2.0 The Interconnection Customer must verify that the intended use of the equipment falls within the use or uses for which the equipment was tested, labeled, and listed by the NRTL.

3.0 Certified equipment shall not require further type-test review, testing, or additional equipment to meet the requirements of this interconnection procedure; however, nothing herein shall preclude the need for an on-site commissioning test by the parties to the interconnection nor follow-up production testing by the NRTL.

4.0 If the certified equipment package includes only interface components (switchgear, inverters, or other interface devices), then an Interconnection Customer must show that the generator or other electric source being utilized with the equipment package is compatible with the equipment package and is consistent with the testing and listing specified for this type of interconnection equipment.

5.0 Provided the generator or electric source, when combined with the equipment package, is within the range of capabilities for which it was tested by the NRTL, and does not violate the interface components' labeling and listing performed by the NRTL, no further design review, testing or additional equipment on the customer side of the point of common coupling shall be required to meet the requirements of this interconnection procedure.

6.0 An equipment package does not include equipment provided by the utility.

7.0 Any equipment package approved and listed in a state by that state's regulatory body for interconnected operation in that state prior to the effective date of these small generator interconnection procedures shall be considered certified under these procedures for use in that state.

ATTACHMENT 5

Application, Procedures, and Terms and Conditions for Interconnecting a Certified Inverter-Based Small Generating Facility No Larger than 10 kW ("10 kW Inverter Process")

1.0 The Interconnection Customer ("Customer") completes the Interconnection Request ("Application") and submits it to the Transmission Provider ("Company").

2.0 The Company acknowledges to the Customer receipt of the Application within three Business Days of receipt.

3.0 The Company evaluates the Application for completeness and notifies the Customer within ten Business Days of receipt that the Application is or is not complete and, if not, advises what material is missing.

4.0 The Company verifies that the Small Generating Facility can be interconnected safely and reliably using the screens contained in the Fast Track Process in the Small Generator Interconnection Procedures (SGIP). The Company has 15 Business Days to complete this process. Unless the Company determines and demonstrates that the Small Generating Facility cannot be interconnected safely and reliably, the Company approves the Application and returns it to the Customer. Note to Customer: Please check with the Company before submitting the Application if disconnection equipment is required.

5.0 After installation, the Customer returns the Certificate of Completion to the Company. Prior to parallel operation, the Company may inspect the Small Generating Facility for compliance with standards which may include a witness test, and may schedule appropriate metering replacement, if necessary.

6.0 The Company notifies the Customer in writing that interconnection of the Small Generating Facility is authorized. If the witness test is not satisfactory, the Company has the right to disconnect the Small Generating Facility. The Customer has no right to operate in parallel until a witness test has been performed, or previously waived on the Application. The Company is obligated to complete this witness test within ten Business Days of the receipt of the Certificate of Completion. If the Company does not inspect within ten Business Days or by

mutual agreement of the Parties, the witness test is deemed waived.

7.0 Contact Information – The Customer must provide the contact information for the legal applicant (i.e., the Interconnection Customer). If another entity is responsible for interfacing with the Company, that contact information must be provided on the Application.

8.0 Ownership Information – Enter the legal names of the owner(s) of the Small Generating Facility. Include the percentage ownership (if any) by any utility or public utility holding company, or by any entity owned by either.

9.0 UL1741 Listed – This standard ("Inverters, Converters, and Controllers for Use in Independent Power Systems") addresses the electrical interconnection design of various forms of generating equipment. Many manufacturers submit their equipment to a Nationally Recognized Testing Laboratory (NRTL) that verifies compliance with UL1741. This "listing" is then marked on the equipment and supporting documentation.

Application for Interconnecting a Certified Inverter-Based Small Generating Facility No Larger than 10kW

This Application is considered complete when it provides all applicable and correct information required below. Per SGIP section 1.5, documentation of site control must be submitted with the Interconnection Request. Additional information to evaluate the Application may be required.

Processing Fee

A non-refundable processing fee of $100 must accompany this Application.

Interconnection Customer

Name: _____

Contact Person: _____

Address: _____

City: _____ State: _____ Zip: _____

Telephone (Day): _____ (Evening): _____

Fax: _____ E-Mail Address: _____

Contact (if different from Interconnection Customer)

Name: _____

Address: _____

City: _____ State: _____ Zip: _____

Telephone (Day): _____ (Evening): _____

Fax: _____ E-Mail Address: _____

Owner of the facility (include % ownership by any electric utility): _____

Small Generating Facility Information

Location (if different from above): _____

Electric Service Company: _____

Account Number: _____

Inverter Manufacturer:_____Model_____

Nameplate Rating: _____ (kW) _____ (kVA) _____ (AC Volts)

Single Phase _____ Three Phase_____

System Design Capacity: _____ (kW) _____ (kVA)

Prime Mover: Photovoltaic ☐ Reciprocating Engine ☐ Fuel Cell ☐

Turbine ☐ Other _____

Energy Source: Solar ☐ Wind ☐ Hydro ☐ Diesel ☐ Natural Gas ☐

Fuel Oil ☐ Other (describe) _____

Is the equipment UL1741 Listed? Yes_____ No ___

If Yes, attach manufacturer's cut-sheet showing UL1741 listing

Estimated Installation Date: _____ Estimated In-Service Date: _____

The 10 kW Inverter Process is available only for inverter-based Small Generating Facilities no larger than 10 kW that meet the codes, standards, and certification requirements of Attachments 3 and 4 of the Small Generator Interconnection Procedures (SGIP), or the Transmission Provider has reviewed the design or tested the proposed Small Generating Facility and is satisfied that it is safe to operate.

List components of the Small Generating Facility equipment package that are currently certified:

Equipment Type	Certifying Entity
1. _____	_____
2. _____	_____
3. _____	_____
4. _____	_____
5. _____	_____

Interconnection Customer Signature

I hereby certify that, to the best of my knowledge, the information provided in this Application is true. I agree to abide by the Terms and Conditions for Interconnecting an Inverter-Based Small Generating Facility No Larger than 10kW and return the Certificate of Completion when the Small Generating Facility has been installed.

Signed: _____

Title: _____ Date: _____

Contingent Approval to Interconnect the Small Generating Facility

(For Company use only)

Interconnection of the Small Generating Facility is approved contingent upon the Terms and Conditions for Interconnecting an Inverter-Based Small Generating Facility No Larger than 10kW and return of the Certificate of Completion.

Company Signature: _____

Title: _____ Date: _____

Application ID number: _____

Company waives inspection/witness test? Yes___No___

Small Generating Facility Certificate of Completion

Is the Small Generating Facility owner-installed? Yes_____ No _____

Interconnection Customer: _____

Contact Person:_____

Address: _____

Location of the Small Generating Facility (if different from above):

_____

City: _____ State: _____ Zip Code: _____

Telephone (Day): _____ (Evening): _____

Fax: _____ E-Mail Address: _____

Electrician:

Name: _____

Address: _____

City: _____ State: _____ Zip Code: _____

Telephone (Day): _____ (Evening): _____

Fax: _____ E-Mail Address: _____

License number: _____

Date Approval to Install Facility granted by the Company: _____

Application ID number: _____

Inspection:

The Small Generating Facility has been installed and inspected in compliance with the local

building/electrical code of _____

Signed (Local electrical wiring inspector, or attach signed electrical inspection):

_____

Print Name: _____

Date: _____

As a condition of interconnection, you are required to send/fax a copy of this form along with a copy of the signed electrical permit to (insert Company information below):

Name: _____

Company: _____

Address: _____

_____

City, State ZIP: _____

Fax: _____

Approval to Energize the Small Generating Facility (For Company use only)

Energizing the Small Generating Facility is approved contingent upon the Terms and Conditions for Interconnecting an Inverter-Based Small Generating Facility No Larger than 10kW

Company Signature: _____

Title: _____ Date: _____

Terms and Conditions for Interconnecting an Inverter-Based Small Generating Facility No Larger than 10kW

1.0 **Construction of the Facility**

The Interconnection Customer (the "Customer") may proceed to construct (including operational testing not to exceed two hours) the Small Generating Facility when the Transmission Provider (the "Company") approves the Interconnection Request (the "Application") and returns it to the Customer.

2.0 **Interconnection and Operation**

The Customer may operate Small Generating Facility and interconnect with the Company's electric system once all of the following have occurred:

2.1 Upon completing construction, the Customer will cause the Small Generating Facility to be inspected or otherwise certified by the appropriate local electrical wiring inspector with jurisdiction, and

2.2 The Customer returns the Certificate of Completion to the Company, and

2.3 The Company has either:

2.3.1 Completed its inspection of the Small Generating Facility to ensure that all equipment has been appropriately installed and that all electrical connections have been made in accordance with applicable codes. All inspections must be conducted by the Company, at its own expense, within ten Business Days after receipt of the Certificate of Completion and shall take place at a time agreeable to the Parties. The Company shall provide a written statement that the Small Generating Facility has passed inspection or shall notify the Customer of what steps it must take to pass inspection as soon as practicable after the inspection takes place; or

2.3.2 If the Company does not schedule an inspection of the Small Generating Facility within ten business days after receiving the Certificate of Completion, the witness test is deemed waived (unless the Parties agree otherwise); or

2.3.3 The Company waives the right to inspect the Small Generating Facility.

2.4 The Company has the right to disconnect the Small Generating Facility in the event of improper installation or failure to return the Certificate of Completion.

2.5 Revenue quality metering equipment must be installed and tested in accordance with applicable ANSI standards.

3.0 **Safe Operations and Maintenance**

The Customer shall be fully responsible to operate, maintain, and repair the Small Generating

Facility as required to ensure that it complies at all times with the interconnection standards to which it has been certified.

4.0 **Access**

The Company shall have access to the disconnect switch (if the disconnect switch is required) and metering equipment of the Small Generating Facility at all times. The Company shall provide reasonable notice to the Customer when possible prior to using its right of access.

5.0 **Disconnection**

The Company may temporarily disconnect the Small Generating Facility upon the following conditions:

5.1 For scheduled outages upon reasonable notice.

5.2 For unscheduled outages or emergency conditions.

5.3 If the Small Generating Facility does not operate in the manner consistent with these Terms and Conditions.

5.4 The Company shall inform the Customer in advance of any scheduled disconnection, or as is reasonable after an unscheduled disconnection.

6.0 **Indemnification**

The Parties shall at all times indemnify, defend, and save the other Party harmless from, any and all damages, losses, claims, including claims and actions relating to injury to or death of any person or damage to property, demand, suits, recoveries, costs and expenses, court costs, attorney fees, and all other obligations by or to third parties, arising out of or resulting from the other Party's action or inactions of its obligations under this agreement on behalf of the indemnifying Party, except in cases of gross negligence or intentional wrongdoing by the indemnified Party.

7. 0 **Insurance**

The Parties agree to follow all applicable insurance requirements imposed by the state in which the Point of Interconnection is located. All insurance policies must be maintained with insurers authorized to do business in that state.

8.0 **Limitation of Liability**

Each party's liability to the other party for any loss, cost, claim, injury, liability, or expense, including reasonable attorney's fees, relating to or arising from any act or omission in its performance of this Agreement, shall be limited to the amount of direct damage actually incurred. In no event shall either party be liable to the other party for any indirect, incidental, special, consequential, or punitive damages of any kind whatsoever, except as allowed under paragraph 6.0.

9.0 **Termination**

The agreement to operate in parallel may be terminated under the following conditions:

9.1 **By the Customer**

By providing written notice to the Company.

9.2 **By the Company**
If the Small Generating Facility fails to operate for any consecutive 12 month period or the Customer fails to remedy a violation of these Terms and Conditions.

9.3 **Permanent Disconnection**
In the event this Agreement is terminated, the Company shall have the right to disconnect its facilities or direct the Customer to disconnect its Small Generating Facility.

9.4 **Survival Rights**
This Agreement shall continue in effect after termination to the extent necessary to allow or require either Party to fulfill rights or obligations that arose under the Agreement.

10.0 **Assignment/Transfer of Ownership of the Facility**
This Agreement shall survive the transfer of ownership of the Small Generating Facility to a new owner when the new owner agrees in writing to comply with the terms of this Agreement and so notifies the Company.

Attachment 6

Feasibility Study Agreement

THIS AGREEMENT is made and entered into this_____day of_____ 20___ by and between_____, a_____organized and existing under the laws of the State of _____, ("Interconnection Customer,") and _____, a_____ existing under the laws of the State of_____, ("Transmission Provider"). Interconnection Customer and Transmission Provider each may be referred to as a "Party," or collectively as the "Parties."

RECITALS

WHEREAS, Interconnection Customer is proposing to develop a Small Generating Facility or generating capacity addition to an existing Small Generating Facility consistent with the Interconnection Request completed by Interconnection Customer on_____; and

WHEREAS, Interconnection Customer desires to interconnect the Small Generating Facility with the Transmission Provider's Transmission System; and

WHEREAS, Interconnection Customer has requested the Transmission Provider to perform a feasibility study to assess the feasibility of interconnecting the proposed Small Generating Facility with the Transmission Provider's Transmission System, and of any Affected Systems;

NOW, THEREFORE, in consideration of and subject to the mutual covenants contained herein the Parties agreed as follows:

1.0 When used in this Agreement, with initial capitalization, the terms specified shall have the meanings indicated or the meanings specified in the standard Small Generator Interconnection Procedures.

2.0 The Interconnection Customer elects and the Transmission Provider shall cause to be performed an interconnection feasibility study consistent the standard Small Generator Interconnection Procedures in accordance with the Open Access Transmission Tariff.

3.0 The scope of the feasibility study shall be subject to the assumptions set forth in Attachment A to this Agreement.

4.0 The feasibility study shall be based on the technical information provided by the Interconnection Customer in the Interconnection Request, as may be modified as the result of the scoping meeting. The Transmission Provider reserves the right to request additional technical information from the Interconnection Customer as may reasonably become necessary consistent with Good Utility Practice during the course of the feasibility study and as designated in accordance with the standard Small Generator Interconnection Procedures. If the Interconnection Customer modifies its Interconnection Request, the time to complete the feasibility study may be extended by agreement of the Parties.

5.0 In performing the study, the Transmission Provider shall rely, to the extent reasonably practicable, on existing studies of recent vintage. The Interconnection Customer shall not be charged for such existing studies; however, the Interconnection Customer shall be responsible for charges associated with any new study or modifications to existing studies that are reasonably necessary to perform the feasibility study.

6.0 The feasibility study report shall provide the following analyses for the purpose of identifying any potential adverse system impacts that would result from the interconnection of the Small Generating Facility as proposed:

6.1 Initial identification of any circuit breaker short circuit capability limits exceeded as a result of the interconnection;

6.2 Initial identification of any thermal overload or voltage limit violations resulting from the interconnection;

6.3 Initial review of grounding requirements and electric system protection; and

6.4 Description and non-binding estimated cost of facilities required to interconnect the proposed Small Generating Facility and to address the identified short circuit and power flow issues.

7.0 The feasibility study shall model the impact of the Small Generating Facility regardless of purpose in order to avoid the further expense and interruption of operation for reexamination of feasibility and impacts if the Interconnection

Customer later changes the purpose for which the Small Generating Facility is being installed.

8.0 The study shall include the feasibility of any interconnection at a proposed project site where there could be multiple potential Points of Interconnection, as requested by the Interconnection Customer and at the Interconnection Customer's cost.

9.0 A deposit of the lesser of 50 percent of good faith estimated feasibility study costs or earnest money of $1,000 may be required from the Interconnection Customer.

10.0 Once the feasibility study is completed, a feasibility study report shall be prepared and transmitted to the Interconnection Customer. Barring unusual circumstances, the feasibility study must be completed and the feasibility study report transmitted within 30 Business Days of the Interconnection Customer's agreement to conduct a feasibility study.

11.0 Any study fees shall be based on the Transmission Provider's actual costs and will be invoiced to the Interconnection Customer after the study is completed and delivered and will include a summary of professional time.

12.0 The Interconnection Customer must pay any study costs that exceed the deposit without interest within 30 calendar days on receipt of the invoice or resolution of any dispute. If the deposit exceeds the invoiced fees, the Transmission Provider shall refund such excess within 30 calendar days of the invoice without interest.

13.0 Governing Law, Regulatory Authority, and Rules
The validity, interpretation and enforcement of this Agreement and each of its provisions shall be governed by the laws of the state of _____ (where the Point of Interconnection is located), without regard to its conflicts of law principles. This Agreement is subject to all Applicable Laws and Regulations. Each Party expressly reserves the right to seek changes in, appeal, or otherwise contest any laws, orders, or regulations of a Governmental Authority.

14.0 Amendment
The Parties may amend this Agreement by a written instrument duly executed by both Parties.

15.0 No Third-Party Beneficiaries
This Agreement is not intended to and does not create rights, remedies, or benefits of any character whatsoever in favor of any persons, corporations, associations, or

entities other than the Parties, and the obligations herein assumed are solely for the use and benefit of the Parties, their successors in interest and where permitted, their assigns.

16.0 Waiver

16.1 The failure of a Party to this Agreement to insist, on any occasion, upon strict performance of any provision of this Agreement will not be considered a waiver of any obligation, right, or duty of, or imposed upon, such Party.

16.2 Any waiver at any time by either Party of its rights with respect to this Agreement shall not be deemed a continuing waiver or a waiver with respect to any other failure to comply with any other obligation, right, duty of this Agreement. Termination or default of this Agreement for any reason by Interconnection Customer shall not constitute a waiver of the Interconnection Customer's legal rights to obtain an interconnection from the Transmission Provider. Any waiver of this Agreement shall, if requested, be provided in writing.

17.0 Multiple Counterparts
This Agreement may be executed in two or more counterparts, each of which is deemed an original but all constitute one and the same instrument.

18.0 No Partnership
This Agreement shall not be interpreted or construed to create an association, joint venture, agency relationship, or partnership between the Parties or to impose any partnership obligation or partnership liability upon either Party. Neither Party shall have any right, power or authority to enter into any agreement or undertaking for, or act on behalf of, or to act as or be an agent or representative of, or to otherwise bind, the other Party.

19.0 Severability
If any provision or portion of this Agreement shall for any reason be held or adjudged to be invalid or illegal or unenforceable by any court of competent jurisdiction or other Governmental Authority, (1) such portion or provision shall be deemed separate and independent, (2) the Parties shall negotiate in good faith to restore insofar as practicable the benefits to each Party that were affected by such ruling, and (3) the remainder of this Agreement shall remain in full force and effect.

20.0 Subcontractors

Nothing in this Agreement shall prevent a Party from utilizing the services of any subcontractor as it deems appropriate to perform its obligations under this Agreement; provided, however, that each Party shall require its subcontractors to comply with all applicable terms and conditions of this Agreement in providing such services and each Party shall remain primarily liable to the other Party for the performance of such subcontractor.

20.1 The creation of any subcontract relationship shall not relieve the hiring Party of any of its obligations under this Agreement. The hiring Party shall be fully responsible to the other Party for the acts or omissions of any subcontractor the hiring Party hires as if no subcontract had been made; provided, however, that in no event shall the Transmission Provider be liable for the actions or inactions of the Interconnection Customer or its subcontractors with respect to obligations of the Interconnection Customer under this Agreement. Any applicable obligation imposed by this Agreement upon the hiring Party shall be equally binding upon, and shall be construed as having application to, any subcontractor of such Party.

20.2 The obligations under this article will not be limited in any way by any limitation of subcontractor's insurance.

21.0 Reservation of Rights

The Transmission Provider shall have the right to make a unilateral filing with FERC to modify this Agreement with respect to any rates, terms and conditions, charges, classifications of service, rule or regulation under section 205 or any other applicable provision of the Federal Power Act and FERC's rules and regulations thereunder, and the Interconnection Customer shall have the right to make a unilateral filing with FERC to modify this Agreement under any applicable provision of the Federal Power Act and FERC's rules and regulations; provided that each Party shall have the right to protest any such filing by the other Party and to participate fully in any proceeding before FERC in which such modifications may be considered. Nothing in this Agreement shall limit the rights of the Parties or of FERC under sections 205 or 206 of the Federal Power Act and FERC's rules and regulations, except to the extent that the Parties otherwise agree as provided herein.

IN WITNESS WHEREOF, the Parties have caused this Agreement to be duly executed by their duly authorized officers or agents on the day and year first above written.

[Insert name of Transmission Provider]	**[Insert name of Interconnection Customer]**
_____	_____
Signed_____	Signed_____
Name (Printed):	Name (Printed):
_____	_____
Title_____	Title_____

Attachment A to Feasibility Study Agreement

Assumptions Used in Conducting the Feasibility Study

The feasibility study will be based upon the information set forth in the Interconnection Request and agreed upon in the scoping meeting held on _____:

1) Designation of Point of Interconnection and configuration to be studied.

2) Designation of alternative Points of Interconnection and configuration.

1) and 2) are to be completed by the Interconnection Customer. Other assumptions (listed below) are to be provided by the Interconnection Customer and the Transmission Provider.

System Impact Study Agreement

THIS AGREEMENT is made and entered into this_____day of_____ 20___ by and between_____, a_____organized and existing under the laws of the State of _____, ("Interconnection Customer,") and _____, a_____ existing under the laws of the State of_____, ("Transmission Provider"). Interconnection Customer and Transmission Provider each may be referred to as a "Party," or collectively as the "Parties."

RECITALS

WHEREAS, the Interconnection Customer is proposing to develop a Small Generating Facility or generating capacity addition to an existing Small Generating Facility consistent with the Interconnection Request completed by the Interconnection Customer on_____; and

WHEREAS, the Interconnection Customer desires to interconnect the Small Generating Facility with the Transmission Provider's Transmission System;

WHEREAS, the Transmission Provider has completed a feasibility study and provided the results of said study to the Interconnection Customer (This recital to be omitted if the Parties have agreed to forego the feasibility study.); and

WHEREAS, the Interconnection Customer has requested the Transmission Provider to perform a system impact study(s) to assess the impact of interconnecting the Small Generating Facility with the Transmission Provider's Transmission System, and of any Affected Systems;

NOW, THEREFORE, in consideration of and subject to the mutual covenants contained herein the Parties agreed as follows:

1.0 When used in this Agreement, with initial capitalization, the terms specified shall have the meanings indicated or the meanings specified in the standard Small Generator Interconnection Procedures.

2.0 The Interconnection Customer elects and the Transmission Provider shall cause to

be performed a system impact study(s) consistent with the standard Small Generator Interconnection Procedures in accordance with the Open Access Transmission Tariff.

3.0 The scope of a system impact study shall be subject to the assumptions set forth in Attachment A to this Agreement.

4.0 A system impact study will be based upon the results of the feasibility study and the technical information provided by Interconnection Customer in the Interconnection Request. The Transmission Provider reserves the right to request additional technical information from the Interconnection Customer as may reasonably become necessary consistent with Good Utility Practice during the course of the system impact study. If the Interconnection Customer modifies its designated Point of Interconnection, Interconnection Request, or the technical information provided therein is modified, the time to complete the system impact study may be extended.

5.0 A system impact study shall consist of a short circuit analysis, a stability analysis, a power flow analysis, voltage drop and flicker studies, protection and set point coordination studies, and grounding reviews, as necessary. A system impact study shall state the assumptions upon which it is based, state the results of the analyses, and provide the requirement or potential impediments to providing the requested interconnection service, including a preliminary indication of the cost and length of time that would be necessary to correct any problems identified in those analyses and implement the interconnection. A system impact study shall provide a list of facilities that are required as a result of the Interconnection Request and non-binding good faith estimates of cost responsibility and time to construct.

6.0 A distribution system impact study shall incorporate a distribution load flow study, an analysis of equipment interrupting ratings, protection coordination study, voltage drop and flicker studies, protection and set point coordination studies, grounding reviews, and the impact on electric system operation, as necessary.

7.0 Affected Systems may participate in the preparation of a system impact study, with a division of costs among such entities as they may agree. All Affected Systems shall be afforded an opportunity to review and comment upon a system impact study that covers potential adverse system impacts on their electric systems, and the Transmission Provider has 20 additional Business Days to complete a system impact study requiring review by Affected Systems.

8.0 If the Transmission Provider uses a queuing procedure for sorting or prioritizing projects and their associated cost responsibilities for any required Network Upgrades, the system impact study shall consider all generating facilities (and with respect to paragraph 8.3 below, any identified Upgrades associated with such higher queued interconnection) that, on the date the system impact study is commenced –

8.1 Are directly interconnected with the Transmission Provider's electric system; or

8.2 Are interconnected with Affected Systems and may have an impact on the proposed interconnection; and

8.3 Have a pending higher queued Interconnection Request to interconnect with the Transmission Provider's electric system.

9.0 A distribution system impact study, if required, shall be completed and the results transmitted to the Interconnection Customer within 30 Business Days after this Agreement is signed by the Parties. A transmission system impact study, if required, shall be completed and the results transmitted to the Interconnection Customer within 45 Business Days after this Agreement is signed by the Parties, or in accordance with the Transmission Provider's queuing procedures.

10.0 A deposit of the equivalent of the good faith estimated cost of a distribution system impact study and the one half the good faith estimated cost of a transmission system impact study may be required from the Interconnection Customer.

11.0 Any study fees shall be based on the Transmission Provider's actual costs and will be invoiced to the Interconnection Customer after the study is completed and delivered and will include a summary of professional time.

12.0 The Interconnection Customer must pay any study costs that exceed the deposit without interest within 30 calendar days on receipt of the invoice or resolution of any dispute. If the deposit exceeds the invoiced fees, the Transmission Provider shall refund such excess within 30 calendar days of the invoice without interest.

13.0 Governing Law, Regulatory Authority, and Rules
The validity, interpretation and enforcement of this Agreement and each of its provisions shall be governed by the laws of the state of _____

(where the Point of Interconnection is located), without regard to its conflicts of law principles. This Agreement is subject to all Applicable Laws and Regulations. Each Party expressly reserves the right to seek changes in, appeal, or otherwise contest any laws, orders, or regulations of a Governmental Authority.

14.0 Amendment

The Parties may amend this Agreement by a written instrument duly executed by both Parties.

15.0 No Third-Party Beneficiaries

This Agreement is not intended to and does not create rights, remedies, or benefits of any character whatsoever in favor of any persons, corporations, associations, or entities other than the Parties, and the obligations herein assumed are solely for the use and benefit of the Parties, their successors in interest and where permitted, their assigns.

16.0 Waiver

16.1 The failure of a Party to this Agreement to insist, on any occasion, upon strict performance of any provision of this Agreement will not be considered a waiver of any obligation, right, or duty of, or imposed upon, such Party.

16.2 Any waiver at any time by either Party of its rights with respect to this Agreement shall not be deemed a continuing waiver or a waiver with respect to any other failure to comply with any other obligation, right, duty of this Agreement. Termination or default of this Agreement for any reason by Interconnection Customer shall not constitute a waiver of the Interconnection Customer's legal rights to obtain an interconnection from the Transmission Provider. Any waiver of this Agreement shall, if requested, be provided in writing.

17.0 Multiple Counterparts

This Agreement may be executed in two or more counterparts, each of which is deemed an original but all constitute one and the same instrument.

18.0 No Partnership

This Agreement shall not be interpreted or construed to create an association, joint venture, agency relationship, or partnership between the Parties or to impose any partnership obligation or partnership liability upon either Party. Neither Party shall have any right, power or authority to enter into any agreement or undertaking

for, or act on behalf of, or to act as or be an agent or representative of, or to otherwise bind, the other Party.

19.0 Severability

If any provision or portion of this Agreement shall for any reason be held or adjudged to be invalid or illegal or unenforceable by any court of competent jurisdiction or other Governmental Authority, (1) such portion or provision shall be deemed separate and independent, (2) the Parties shall negotiate in good faith to restore insofar as practicable the benefits to each Party that were affected by such ruling, and (3) the remainder of this Agreement shall remain in full force and effect.

20.0 Subcontractors

Nothing in this Agreement shall prevent a Party from utilizing the services of any subcontractor as it deems appropriate to perform its obligations under this Agreement; provided, however, that each Party shall require its subcontractors to comply with all applicable terms and conditions of this Agreement in providing such services and each Party shall remain primarily liable to the other Party for the performance of such subcontractor.

20.1 The creation of any subcontract relationship shall not relieve the hiring Party of any of its obligations under this Agreement. The hiring Party shall be fully responsible to the other Party for the acts or omissions of any subcontractor the hiring Party hires as if no subcontract had been made; provided, however, that in no event shall the Transmission Provider be liable for the actions or inactions of the Interconnection Customer or its subcontractors with respect to obligations of the Interconnection Customer under this Agreement. Any applicable obligation imposed by this Agreement upon the hiring Party shall be equally binding upon, and shall be construed as having application to, any subcontractor of such Party.

20.2 The obligations under this article will not be limited in any way by any limitation of subcontractor's insurance.

21.0 Reservation of Rights

The Transmission Provider shall have the right to make a unilateral filing with FERC to modify this Agreement with respect to any rates, terms and conditions, charges, classifications of service, rule or regulation under section 205 or any other applicable provision of the Federal Power Act and FERC's rules and regulations thereunder, and the Interconnection Customer shall have the right to

make a unilateral filing with FERC to modify this Agreement under any applicable provision of the Federal Power Act and FERC's rules and regulations; provided that each Party shall have the right to protest any such filing by the other Party and to participate fully in any proceeding before FERC in which such modifications

IN WITNESS THEREOF, the Parties have caused this Agreement to be duly executed by their duly authorized officers or agents on the day and year first above written.

[Insert name of Transmission Provider]	**[Insert name of Interconnection Customer]**
_____	_____
Signed_____	Signed_____
Name (Printed):	Name (Printed):
_____	_____
Title_____	Title_____

Attachment A to System Impact Study Agreement

Assumptions Used in Conducting the System Impact Study

The system impact study shall be based upon the results of the feasibility study, subject to any modifications in accordance with the standard Small Generator Interconnection Procedures, and the following assumptions:

1) Designation of Point of Interconnection and configuration to be studied.

2) Designation of alternative Points of Interconnection and configuration.

1) and 2) are to be completed by the Interconnection Customer. Other assumptions (listed below) are to be provided by the Interconnection Customer and the Transmission Provider.

Attachment 8

Facilities Study Agreement

THIS AGREEMENT is made and entered into this_____day of_____ 20___ by and between_____, a_____organized and existing under the laws of the State of _____, ("Interconnection Customer,") and _____, a_____ existing under the laws of the State of_____, ("Transmission Provider"). Interconnection Customer and Transmission Provider each may be referred to as a "Party," or collectively as the "Parties."

RECITALS

WHEREAS, the Interconnection Customer is proposing to develop a Small Generating Facility or generating capacity addition to an existing Small Generating Facility consistent with the Interconnection Request completed by the Interconnection Customer on_____; and

WHEREAS, the Interconnection Customer desires to interconnect the Small Generating Facility with the Transmission Provider's Transmission System;

WHEREAS, the Transmission Provider has completed a system impact study and provided the results of said study to the Interconnection Customer; and

WHEREAS, the Interconnection Customer has requested the Transmission Provider to perform a facilities study to specify and estimate the cost of the equipment, engineering, procurement and construction work needed to implement the conclusions of the system impact study in accordance with Good Utility Practice to physically and electrically connect the Small Generating Facility with the Transmission Provider's Transmission System.

NOW, THEREFORE, in consideration of and subject to the mutual covenants contained herein the Parties agreed as follows:

1.0 When used in this Agreement, with initial capitalization, the terms specified shall have the meanings indicated or the meanings specified in the standard Small Generator Interconnection Procedures.

2.0 The Interconnection Customer elects and the Transmission Provider shall cause a

facilities study consistent with the standard Small Generator Interconnection Procedures to be performed in accordance with the Open Access Transmission Tariff.

3.0 The scope of the facilities study shall be subject to data provided in Attachment A to this Agreement.

4.0 The facilities study shall specify and estimate the cost of the equipment, engineering, procurement and construction work (including overheads) needed to implement the conclusions of the system impact study(s). The facilities study shall also identify (1) the electrical switching configuration of the equipment, including, without limitation, transformer, switchgear, meters, and other station equipment, (2) the nature and estimated cost of the Transmission Provider's Interconnection Facilities and Upgrades necessary to accomplish the interconnection, and (3) an estimate of the time required to complete the construction and installation of such facilities.

5.0 The Transmission Provider may propose to group facilities required for more than one Interconnection Customer in order to minimize facilities costs through economies of scale, but any Interconnection Customer may require the installation of facilities required for its own Small Generating Facility if it is willing to pay the costs of those facilities.

6.0 A deposit of the good faith estimated facilities study costs may be required from the Interconnection Customer.

7.0 In cases where Upgrades are required, the facilities study must be completed within 45 Business Days of the receipt of this Agreement. In cases where no Upgrades are necessary, and the required facilities are limited to Interconnection Facilities, the facilities study must be completed within 30 Business Days.

8.0 Once the facilities study is completed, a draft facilities study report shall be prepared and transmitted to the Interconnection Customer. Barring unusual circumstances, the facilities study must be completed and the draft facilities study report transmitted
within 30 Business Days of the Interconnection Customer's agreement to conduct a facilities study.

9.0 Interconnection Customer may, within thirty (30) calendar days after receipt of the draft report, provide written comments to Transmission Provider, which Transmission Provider shall include in the final report. Transmission Provider shall issue the final Interconnection Facilities Study report within fifteen (15) Business Days of receiving Interconnection Customer's comments or promptly

upon receiving Interconnection Customer's statement that it will not provide comments. Transmission Provider may reasonably extend such fifteen-day period upon notice to Interconnection Customer if Interconnection Customer's comments require Transmission Provider to perform additional analyses or make other significant modifications prior to the issuance of the final Interconnection Facilities Report. Upon request, Transmission Provider shall provide Interconnection Customer supporting documentation, workpapers, and databases or data developed in the preparation of the Interconnection Facilities Study, subject to confidentiality arrangements consistent with Section 4.5 of the standard Small Generator Interconnection Procedures.

10.0 Within ten (10) Business Days of providing a draft Interconnection Facilities Study report to Interconnection Customer, Transmission Provider and Interconnection Customer shall meet to discuss the results of the Interconnection Facilities Study.

~~9~~11.0 Any study fees shall be based on the Transmission Provider's actual costs and will be invoiced to the Interconnection Customer after the study is completed and delivered and will include a summary of professional time.

~~10~~12.0 The Interconnection Customer must pay any study costs that exceed the deposit without interest within 30 calendar days on receipt of the invoice or resolution of any dispute. If the deposit exceeds the invoiced fees, the Transmission Provider shall refund such excess within 30 calendar days of the invoice without interest.

~~11~~13.0 Governing Law, Regulatory Authority, and Rules

The validity, interpretation and enforcement of this Agreement and each of its provisions shall be governed by the laws of the state of _____ (where the Point of Interconnection is located), without regard to its conflicts of law principles. This Agreement is subject to all Applicable Laws and Regulations. Each Party expressly reserves the right to seek changes in, appeal, or otherwise contest any laws, orders, or regulations of a Governmental Authority.

~~12~~14.0 Amendment

The Parties may amend this Agreement by a written instrument duly executed by both Parties.

~~13~~15.0 No Third-Party Beneficiaries

This Agreement is not intended to and does not create rights, remedies, or benefits of any character whatsoever in favor of any persons, corporations, associations, or entities other than the Parties, and the obligations herein assumed are solely for the use and benefit of the Parties, their successors in interest and where permitted, their assigns.

~~14~~16.0Waiver

~~14~~16.1The failure of a Party to this Agreement to insist, on any occasion, upon strict performance of any provision of this Agreement will not be considered a waiver of any obligation, right, or duty of, or imposed upon, such Party.

~~14~~16.2Any waiver at any time by either Party of its rights with respect to this Agreement shall not be deemed a continuing waiver or a waiver with respect to any other failure to comply with any other obligation, right, duty of this Agreement. Termination or default of this Agreement for any reason by Interconnection Customer shall not constitute a waiver of the Interconnection Customer's legal rights to obtain an interconnection from the Transmission Provider. Any waiver of this Agreement shall, if requested, be provided in writing.

~~15~~17.0Multiple Counterparts

This Agreement may be executed in two or more counterparts, each of which is deemed an original but all constitute one and the same instrument.

~~16~~18.0No Partnership

This Agreement shall not be interpreted or construed to create an association, joint venture, agency relationship, or partnership between the Parties or to impose any partnership obligation or partnership liability upon either Party. Neither Party shall have any right, power or authority to enter into any agreement or undertaking for, or act on behalf of, or to act as or be an agent or representative of, or to otherwise bind, the other Party.

~~17~~19.0Severability

If any provision or portion of this Agreement shall for any reason be held or adjudged to be invalid or illegal or unenforceable by any court of competent jurisdiction or other Governmental Authority, (1) such portion or provision shall be deemed separate and independent, (2) the Parties shall negotiate in good faith to restore insofar as practicable the benefits to each Party that were affected by such ruling, and (3) the remainder of this Agreement shall remain in full force and effect.

~~18~~20.0Subcontractors

Nothing in this Agreement shall prevent a Party from utilizing the services of any subcontractor as it deems appropriate to perform its obligations under this Agreement; provided, however, that each Party shall require its subcontractors to comply with all applicable terms and conditions of this Agreement in providing

such services and each Party shall remain primarily liable to the other Party for the performance of such subcontractor.

~~18~~20.1 The creation of any subcontract relationship shall not relieve the hiring Party of any of its obligations under this Agreement. The hiring Party shall be fully responsible to the other Party for the acts or omissions of any subcontractor the hiring Party hires as if no subcontract had been made; provided, however, that in no event shall the Transmission Provider be liable for the actions or inactions of the Interconnection Customer or its subcontractors with respect to obligations of the Interconnection Customer under this Agreement. Any applicable obligation imposed by this Agreement upon the hiring Party shall be equally binding upon, and shall be construed as having application to, any subcontractor of such Party.

~~18~~20.2 The obligations under this article will not be limited in any way by any limitation of subcontractor's insurance.

~~19~~21.0 Reservation of Rights

The Transmission Provider shall have the right to make a unilateral filing with FERC to modify this Agreement with respect to any rates, terms and conditions, charges, classifications of service, rule or regulation under section 205 or any other applicable provision of the Federal Power Act and FERC's rules and regulations thereunder, and the Interconnection Customer shall have the right to make a unilateral filing with FERC to modify this Agreement under any applicable provision of the Federal Power Act and FERC's rules and regulations; provided that each Party shall have the right to protest any such filing by the other Party and to participate fully in any proceeding before FERC in which such modifications

IN WITNESS WHEREOF, the Parties have caused this Agreement to be duly executed by their duly authorized officers or agents on the day and year first above written.

[Insert name of Transmission Provider]	**[Insert name of Interconnection Customer]**
_____	_____
Signed_____	Signed_____
Name (Printed):	Name (Printed):
_____	_____

Title_____ Title_____

Attachment A to Facilities Study Agreement

Data to Be Provided by the Interconnection Customer with the Facilities Study Agreement

Provide location plan and simplified one-line diagram of the plant and station facilities. For staged projects, please indicate future generation, transmission circuits, etc.

On the one-line diagram, indicate the generation capacity attached at each metering location. (Maximum load on CT/PT)

On the one-line diagram, indicate the location of auxiliary power. (Minimum load on CT/PT) Amps

One set of metering is required for each generation connection to the new ring bus or existing Transmission Provider station. Number of generation connections: _____

Will an alternate source of auxiliary power be available during CT/PT maintenance?
Yes _____ No _____

Will a transfer bus on the generation side of the metering require that each meter set be designed for the total plant generation? Yes _____ No _____
(Please indicate on the one-line diagram).

What type of control system or PLC will be located at the Small Generating Facility?

_____

_____

What protocol does the control system or PLC use?

_____

_____

_____

Please provide a 7.5-minute quadrangle map of the site. Indicate the plant, station, transmission line, and property lines.

Physical dimensions of the proposed interconnection station:

_____

Bus length from generation to interconnection station:

_____

Line length from interconnection station to Transmission Provider's Transmission System.

_____

Tower number observed in the field. (Painted on tower leg)*:

_____

Number of third party easements required for transmission lines*:

_____

* To be completed in coordination with Transmission Provider.

Is the Small Generating Facility located in Transmission Provider's service area?

Yes _____ No _____ If No, please provide name of local provider:

_____

Please provide the following proposed schedule dates:

Begin Construction Date:_____

Generator step-up transformers receive back feed power	Date:_____
Generation Testing	Date:_____
Commercial Operation	Date:_____

Note: Appendix D will not be published in the Code of Federal

Appendix D to the Proposed Small Generator Interconnection Rule

SMALL GENERATOR INTERCONNECTION AGREEMENT (SGIA)

(For Generating Facilities No Larger Than 20 MW)

TABLE OF CONTENTS

Page No.

Article 1. Scope and Limitations of Agreement. ..... - 1 -
1.1 Applicability ..... - 2 -
1.2 Purpose ..... - 3 -
1.3 No Agreement to Purchase or Deliver Power ..... - 3 -
1.4 Limitations ..... - 3 -
1.5 Responsibilities of the Parties ..... - 2 -
1.6 Parallel Operation Obligations ..... - 3 -
1.7 Metering ..... - 3 -
1.8 Reactive Power ..... - 3 -
Article 2. Inspection, Testing, Authorization, and Right of Access ..... - 4 -
2.1 Equipment Testing and Inspection ..... - 4 -
2.2 Authorization Required Prior to Parallel Operation ..... - 5 -
2.3 Right of Access ..... - 5 -
Article 3. Effective Date, Term, Termination, and Disconnection ..... - 6 -
3.1 Effective Date ..... - 6 -
3.2 Term of Agreement ..... - 6 -
3.3 Termination ..... - 6 -
3.4 Temporary Disconnection ..... - 7 -
3.4.1 Emergency Conditions ..... - 7 -
3.4.2 Routine Maintenance, Construction, and Repair ..... - 7 -
3.4.3 Forced Outages ..... - 8 -
3.4.4 Adverse Operating Effects ..... - 8 -
3.4.5 Modification of the Small Generating Facility ..... - 8 -
3.4.6 Reconnection ..... - 9 -
Article 4. Cost Responsibility for Interconnection Facilities and Distribution Upgrades ..... - 9 -
4.1 Interconnection Facilities ..... - 9 -
4.2 Distribution Upgrades ..... - 9 -
Article 5. Cost Responsibility for Network Upgrades ..... - 9 -
5.1 Applicability ..... - 9 -
5.2 Network Upgrades ..... - 10 -
5.2.1 Repayment of Amounts Advanced for Network Upgrades - 10 -
5.3 Special Provisions for Affected Systems ..... - 11 -
5.4 Rights Under Other Agreements ..... - 11 -
Article 6. Billing, Payment, Milestones, and Financial Security ..... - 11 -
6.1 Billing and Payment Procedures and Final Accounting ..... - 12 -

6.2 Milestones. ..... - 12 -
6.3 Financial Security Arrangements ..... - 13 -
Article 7. Assignment, Liability, Indemnity, Force Majeure, Consequential Damages, and Default ..... - 13 -
7.1 Assignment ..... - 13 -
7.2 Limitation of Liability ..... - 14 -
7.3 Indemnity ..... - 14 -
7.4 Consequential Damages ..... - 15 -
7.5 Force Majeure ..... - 15 -
7.6 Default ..... - 16 -
Article 8. Insurance ..... - 16 -
Article 9. Confidentiality ..... - 17 -
Article 10. Disputes ..... - 18 -
Article 11. Taxes ..... - 19 -
Article 12. Miscellaneous ..... - 19 -
12.1 Governing Law, Regulatory Authority, and Rules 3
12.2 Amendment 3
12.3 No Third-Party Beneficiaries 3
12.4 Waiver 4
12.5 Entire Agreement ..... - 20 -
12.6 Multiple Counterparts 4
12.7 No Partnership 4
12.8 Severability 4
12.9 Security Arrangements ..... - 21 -
12.10 Environmental Releases ..... - 21 -
12.11 Subcontractors 5
12.12 Reservation of Rights 5
Article 13. Notices ..... - 22 -
13.1 General ..... - 22 -
13.2 Billing and Payment ..... - 23 -
13.3 Alternative Forms of Notice ..... - 23 -
13.4 Designated Operating Representative ..... - 24 -
13.5 Changes to the Notice Information ..... - 25 -
Article 14. Signatures ..... - 25 -

Attachment 1 – Glossary of Terms
Attachment 2 – Description and Costs of the Small Generating Facility, Interconnection Facilities, and Metering Equipment
Attachment 3 – One-line Diagram Depicting the Small Generating Facility, Interconnection Facilities, Metering Equipment, and Upgrades
Attachment 4 – Milestones

Attachment 5 – Additional Operating Requirements for the Transmission Provider's Transmission System and Affected Systems Needed to Support the Interconnection Customer's Needs

Attachment 6 – Transmission Provider's Description of its Upgrades and Best Estimate of Upgrade Costs

This Interconnection Agreement ("Agreement") is made and entered into this _____ day of _____, 20__, by

_____

("Transmission Provider"), and

_____

("Interconnection Customer") each hereinafter sometimes referred to individually as "Party" or both referred to collectively as the "Parties."

Transmission Provider Information

Transmission Provider: _____
Attention: _____
Address: _____
City: _____ State: _____ Zip: _____
Phone: _____ Fax: _____

Interconnection Customer Information

Interconnection Customer: _____
Attention: _____
Address: _____
City: _____ State: _____ Zip: _____
Phone: _____ Fax: _____

Interconnection Customer Application No: _____

In consideration of the mutual covenants set forth herein, the Parties agree as follows:

Article 1. Scope and Limitations of Agreement

1.1 This Agreement shall be used for all Interconnection Requests submitted under the Small Generator Interconnection Procedures (SGIP) except for those submitted under the 10 kW Inverter Process contained in SGIP Attachment 5.

1.2 This Agreement governs the terms and conditions under which the Interconnection Customer's Small Generating Facility will interconnect with, and operate in parallel with, the Transmission Provider's Transmission System.

1.3 This Agreement does not constitute an agreement to purchase or deliver the Interconnection Customer's power. The purchase or delivery of power and other services that the Interconnection Customer may require will be covered under

separate agreements, if any. The Interconnection Customer will be responsible for separately making all necessary arrangements (including scheduling) for delivery of electricity with the applicable Transmission Provider.

1.4 Nothing in this Agreement is intended to affect any other agreement between the Transmission Provider and the Interconnection Customer.

1.5 Responsibilities of the Parties

1.5.1 The Parties shall perform all obligations of this Agreement in accordance with all Applicable Laws and Regulations, Operating Requirements, and Good Utility Practice.

1.5.2 The Interconnection Customer shall construct, interconnect, operate and maintain its Small Generating Facility and construct, operate, and maintain its Interconnection Facilities in accordance with the applicable manufacturer's recommended maintenance schedule and, in accordance with this Agreement, and with Good Utility Practice.

1.5.3 The Transmission Provider shall construct, operate, and maintain its Transmission System and Interconnection Facilities in accordance with this Agreement, and with Good Utility Practice.

1.5.4 The Interconnection Customer agrees to construct its facilities or systems in accordance with applicable specifications that meet or exceed those provided by the National Electrical Safety Code, the American National Standards Institute, IEEE, Underwriter's Laboratory, and Operating Requirements in effect at the time of construction and other applicable national and state codes and standards. The Interconnection Customer agrees to design, install, maintain, and operate its Small Generating Facility so as to reasonably minimize the likelihood of (1) a disturbance of its Small Generating Facility adversely affecting or impairing the system or equipment of the Transmission Provider and any Affected Systems, and (2) a disturbance of the system or equipment of the Transmission Provider or any Affected System causing off-normal frequency deviations and resulting in a common mode disconnection of its Small Generating Facility.

1.5.5 Each Party shall operate, maintain, repair, and inspect, and shall be fully responsible for the facilities that it now or subsequently may own unless otherwise specified in the Attachments to this Agreement. Each Party shall be responsible for the safe installation, maintenance, repair and condition of

their respective lines and appurtenances on their respective sides of the point of change of ownership. The Transmission Provider and the Interconnection Customer, as appropriate, shall provide Interconnection Facilities that adequately protect the Transmission Provider's Transmission System, personnel, and other persons from damage and injury. The allocation of responsibility for the design, installation, operation, maintenance and ownership of Interconnection Facilities shall be delineated in the Attachments to this Agreement.

1.5.6 The Transmission Provider shall coordinate with all Affected Systems to support the interconnection.

1.6 Parallel Operation Obligations

Once the Small Generating Facility has been authorized to commence parallel operation, the Interconnection Customer shall abide by all rules and procedures pertaining to the parallel operation of the Small Generating Facility in the applicable control area, including, but not limited to; 1) the rules and procedures concerning the operation of generation set forth in the Tariff or by the applicable system operator(s) for the Transmission Provider's Transmission System and; 2) the Operating Requirements set forth in Attachment 5 of this Agreement.

1.7 Metering

The Interconnection Customer shall be responsible for the Transmission Provider's reasonable and necessary cost for the purchase, installation, operation, maintenance, testing, repair, and replacement of metering and data acquisition equipment specified in Attachments 2 and 3 of this Agreement. The Interconnection Customer's metering (and data acquisition, as required) equipment shall conform to applicable industry rules and Operating Requirements.

1.8 Reactive Power

1.8.1 The Interconnection Customer shall design its Small Generating Facility to maintain a composite power delivery at continuous rated power output at the Point of Interconnection at a power factor within the range of 0.95 leading to 0.95 lagging, unless the Transmission Provider has established different requirements that apply to all similarly situated generators in the control area on a comparable basis. The requirements of this paragraph shall not apply to wind generators.

1.8.2 The Transmission Provider is required to pay the Interconnection Customer for reactive power that the Interconnection Customer provides or absorbs

from the Small Generating Facility when the Transmission Provider requests the Interconnection Customer to operate its Small Generating Facility outside the range specified in article 1.8.1. In addition, if the Transmission Provider pays its own or affiliated generators for reactive power service within the specified range, it must also pay the Interconnection Customer.

1.8.3 Payments shall be in accordance with the Interconnection Customer's applicable rate schedule then in effect unless the provision of such service(s) is subject to a regional transmission organization or independent system operator FERC-approved rate schedule. To the extent that no rate schedule is in effect at the time the Interconnection Customer is required to provide or absorb reactive power under this Agreement, the Parties agree to expeditiously file such rate schedule and agree to support any request for waiver of the Commission's prior notice requirement in order to compensate the Interconnection Customer from the time service commenced.

1.9 Capitalized terms used herein shall have the meanings specified in the Glossary of Terms in Attachment 1 or the body of this Agreement.

Article 2. Inspection, Testing, Authorization, and Right of Access

2.1 Equipment Testing and Inspection

2.1.1 The Interconnection Customer shall test and inspect its Small Generating Facility and Interconnection Facilities prior to interconnection. The Interconnection Customer shall notify the Transmission Provider of such activities no fewer than five Business Days (or as may be agreed to by the Parties) prior to such testing and inspection. Testing and inspection shall occur on a Business Day. The Transmission Provider may, at its own expense, send qualified personnel to the Small Generating Facility site to inspect the interconnection and observe the testing. The Interconnection Customer shall provide the Transmission Provider a written test report when such testing and inspection is completed.

2.1.2 The Transmission Provider shall provide the Interconnection Customer written acknowledgment that it has received the Interconnection Customer's written test report. Such written acknowledgment shall not be deemed to be or construed as any representation, assurance, guarantee, or warranty by

the Transmission Provider of the safety, durability, suitability, or reliability of the Small Generating Facility or any associated control, protective, and safety devices owned or controlled by the Interconnection Customer or the quality of power produced by the Small Generating Facility.

2.2 Authorization Required Prior to Parallel Operation

2.2.1 The Transmission Provider shall use Reasonable Efforts to list applicable parallel operation requirements in Attachment 5 of this Agreement. Additionally, the Transmission Provider shall notify the Interconnection Customer of any changes to these requirements as soon as they are known. The Transmission Provider shall make Reasonable Efforts to cooperate with the Interconnection Customer in meeting requirements necessary for the Interconnection Customer to commence parallel operations by the in-service date.

2.2.2 The Interconnection Customer shall not operate its Small Generating Facility in parallel with the Transmission Provider's Transmission System without prior written authorization of the Transmission Provider. The Transmission Provider will provide such authorization once the Transmission Provider receives notification that the Interconnection Customer has complied with all applicable parallel operation requirements. Such authorization shall not be unreasonably withheld, conditioned, or delayed.

2.3 Right of Access

2.3.1 Upon reasonable notice, the Transmission Provider may send a qualified person to the premises of the Interconnection Customer at or immediately before the time the Small Generating Facility first produces energy to inspect the interconnection, and observe the commissioning of the Small Generating Facility (including any required testing), startup, and operation for a period of up to three Business Days after initial start-up of the unit. In addition, the Interconnection Customer shall notify the Transmission Provider at least five Business Days prior to conducting any on-site verification testing of the Small Generating Facility.

2.3.2 Following the initial inspection process described above, at reasonable hours, and upon reasonable notice, or at any time without notice in the event of an emergency or hazardous condition, the Transmission Provider shall have access to the Interconnection Customer's premises for any

reasonable purpose in connection with the performance of the obligations imposed on it by this Agreement or if necessary to meet its legal obligation to provide service to its customers.

2.3.3 Each Party shall be responsible for its own costs associated with following this article.

Article 3. Effective Date, Term, Termination, and Disconnection

3.1 Effective Date

This Agreement shall become effective upon execution by the Parties subject to acceptance by FERC (if applicable), or if filed unexecuted, upon the date specified by the FERC. The Transmission Provider shall promptly file this Agreement with the FERC upon execution, if required.

3.2 Term of Agreement

This Agreement shall become effective on the Effective Date and shall remain in effect for a period of ten years from the Effective Date or such other longer period as the Interconnection Customer may request and shall be automatically renewed for each successive one-year period thereafter, unless terminated earlier in accordance with article 3.3 of this Agreement.

3.3 Termination

No termination shall become effective until the Parties have complied with all Applicable Laws and Regulations applicable to such termination, including the filing with FERC of a notice of termination of this Agreement (if required), which notice has been accepted for filing by FERC.

3.3.1 The Interconnection Customer may terminate this Agreement at any time by giving the Transmission Provider 20 Business Days written notice.

3.3.2 Either Party may terminate this Agreement after Default pursuant to article 7.6.

3.3.3 Upon termination of this Agreement, the Small Generating Facility will be disconnected from the Transmission Provider's Transmission System. All costs required to effectuate such disconnection shall be borne by the terminating Party, unless such termination resulted from the non-terminating Party's Default of this SGIA or such non-terminating Party otherwise is responsible for these costs under this SGIA.

3.3.4 The termination of this Agreement shall not relieve either Party of its liabilities and obligations, owed or continuing at the time of the termination.

3.3.5 Th~~is~~e provisions of this article shall survive termination or expiration of this Agreement.

3.4 Temporary Disconnection

Temporary disconnection shall continue only for so long as reasonably necessary under Good Utility Practice.

3.4.1 Emergency Conditions -- "Emergency Condition" shall mean a condition or situation: (1) that in the judgment of the Party making the claim is imminently likely to endanger life or property; or (2) that, in the case of the Transmission Provider, is imminently likely (as determined in a non-discriminatory manner) to cause a material adverse effect on the security of, or damage to the Transmission System, the Transmission Provider's Interconnection Facilities or the Transmission Systems of others to which the Transmission System is directly connected; or (3) that, in the case of the Interconnection Customer, is imminently likely (as determined in a non-discriminatory manner) to cause a material adverse effect on the security of, or damage to, the Small Generating Facility or the Interconnection Customer's Interconnection Facilities. Under Emergency Conditions, the Transmission Provider may immediately suspend interconnection service and temporarily disconnect the Small Generating Facility. The Transmission Provider shall notify the Interconnection Customer promptly when it becomes aware of an Emergency Condition that may reasonably be expected to affect the Interconnection Customer's operation of the Small Generating Facility. The Interconnection Customer shall notify the Transmission Provider promptly when it becomes aware of an Emergency Condition that may reasonably be expected to affect the Transmission Provider's Transmission System or any Affected Systems. To the extent information is known, the notification shall describe the Emergency Condition, the extent of the damage or deficiency, the expected effect on the operation of both Parties' facilities and operations, its anticipated duration, and the necessary corrective action.

3.4.2 Routine Maintenance, Construction, and Repair

The Transmission Provider may interrupt interconnection service or curtail the output of the Small Generating Facility and temporarily disconnect the

Small Generating Facility from the Transmission Provider's Transmission System when necessary for routine maintenance, construction, and repairs on the Transmission Provider's Transmission System. The Transmission Provider shall provide the Interconnection Customer with five Business Days notice prior to such interruption. The Transmission Provider shall use Reasonable Efforts to coordinate such reduction or temporary disconnection with the Interconnection Customer.

3.4.3 Forced Outages

During any forced outage, the Transmission Provider may suspend interconnection service to effect immediate repairs on the Transmission Provider's Transmission System. The Transmission Provider shall use Reasonable Efforts to provide the Interconnection Customer with prior notice. If prior notice is not given, the Transmission Provider shall, upon request, provide the Interconnection Customer written documentation after the fact explaining the circumstances of the disconnection.

3.4.4 Adverse Operating Effects

The Transmission Provider shall notify the Interconnection Customer as soon as practicable if, based on Good Utility Practice, operation of the Small Generating Facility may cause disruption or deterioration of service to other customers served from the same electric system, or if operating the Small Generating Facility could cause damage to the Transmission Provider's Transmission System or Affected Systems. Supporting documentation used to reach the decision to disconnect shall be provided to the Interconnection Customer upon request. If, after notice, the Interconnection Customer fails to remedy the adverse operating effect within a reasonable time, the Transmission Provider may disconnect the Small Generating Facility. The Transmission Provider shall provide the Interconnection Customer with five Business Day notice of such disconnection, unless the provisions of article 3.4.1 apply.

3.4.5 Modification of the Small Generating Facility

The Interconnection Customer must receive written authorization from the Transmission Provider before making any change to the Small Generating Facility that may have a material impact on the safety or reliability of the Transmission System. Such authorization shall not be unreasonably withheld. Modifications shall be done in accordance with Good Utility Practice. If the Interconnection Customer makes such modification without the Transmission Provider's prior written authorization, the latter shall have the right to temporarily disconnect the Small Generating Facility.

3.4.6 Reconnection
The Parties shall cooperate with each other to restore the Small Generating Facility, Interconnection Facilities, and the Transmission Provider's Transmission System to their normal operating state as soon as reasonably practicable following a temporary disconnection.

Article 4. Cost Responsibility for Interconnection Facilities and Distribution Upgrades

4.1 Interconnection Facilities

4.1.1 The Interconnection Customer shall pay for the cost of the Interconnection Facilities itemized in Attachment 2 of this Agreement. The Transmission Provider shall provide a best estimate cost, including overheads, for the purchase and construction of its Interconnection Facilities and provide a detailed itemization of such costs. Costs associated with Interconnection Facilities may be shared with other entities that may benefit from such facilities by agreement of the Interconnection Customer, such other entities, and the Transmission Provider.

4.1.2 The Interconnection Customer shall be responsible for its share of all reasonable expenses, including overheads, associated with (1) owning, operating, maintaining, repairing, and replacing its own Interconnection Facilities, and (2) operating, maintaining, repairing, and replacing the Transmission Provider's Interconnection Facilities.

4.2 Distribution Upgrades
The Transmission Provider shall design, procure, construct, install, and own the Distribution Upgrades described in Attachment 6 of this Agreement. If the Transmission Provider and the Interconnection Customer agree, the Interconnection Customer may construct Distribution Upgrades that are located on land owned by the Interconnection Customer. The actual cost of the Distribution Upgrades, including overheads, shall be directly assigned to the Interconnection Customer.

Article 5. Cost Responsibility for Network Upgrades

5.1 Applicability

No portion of this article 5 shall apply unless the interconnection of the Small Generating Facility requires Network Upgrades.

5.2 Network Upgrades

The Transmission Provider or the Transmission Owner shall design, procure, construct, install, and own the Network Upgrades described in Attachment 6 of this Agreement. If the Transmission Provider and the Interconnection Customer agree, the Interconnection Customer may construct Network Upgrades that are located on land owned by the Interconnection Customer. Unless the Transmission Provider elects to pay for Network Upgrades, the actual cost of the Network Upgrades, including overheads, shall be borne initially by the Interconnection Customer.

5.2.1 Repayment of Amounts Advanced for Network Upgrades

The Interconnection Customer shall be entitled to a cash repayment, equal to the total amount paid to the Transmission Provider and Affected System operator, if any, for Network Upgrades, including any tax gross-up or other tax-related payments associated with the Network Upgrades, and not otherwise refunded to the Interconnection Customer, to be paid to the Interconnection Customer on a dollar-for-dollar basis for the non-usage sensitive portion of transmission charges, as payments are made under the Transmission Provider's Tariff and Affected System's Tariff for transmission services with respect to the Small Generating Facility. Any repayment shall include interest calculated in accordance with the methodology set forth in FERC's regulations at 18 C.F.R. § 35.19a(a)(2)(iii) from the date of any payment for Network Upgrades through the date on which the Interconnection Customer receives a repayment of such payment pursuant to this subparagraph. The Interconnection Customer may assign such repayment rights to any person.

5.2.1.1 Notwithstanding the foregoing, the Interconnection Customer, the Transmission Provider, and any applicable Affected System operators may adopt any alternative payment schedule that is mutually agreeable so long as the Transmission Provider and said Affected System operators take one of the following actions no later than five years from the Commercial Operation Date: (1) return to the Interconnection Customer any amounts advanced for Network Upgrades not previously repaid, or (2) declare in writing that the Transmission Provider or any applicable Affected System operators will continue to provide payments

to the Interconnection Customer on a dollar-for-dollar basis for the non-usage sensitive portion of transmission charges, or develop an alternative schedule that is mutually agreeable and provides for the return of all amounts advanced for Network Upgrades not previously repaid; however, full reimbursement shall not extend beyond twenty (20) years from the commercial operation date.

5.2.1.2 If the Small Generating Facility fails to achieve commercial operation, but it or another generating facility is later constructed and requires use of the Network Upgrades, the Transmission Provider and Affected System operator shall at that time reimburse the Interconnection Customer for the amounts advanced for the Network Upgrades. Before any such reimbursement can occur, the Interconnection Customer, or the entity that ultimately constructs the generating facility, if different, is responsible for identifying the entity to which reimbursement must be made.

5.3 Special Provisions for Affected Systems
Unless the Transmission Provider provides, under this Agreement, for the repayment of amounts advanced to any applicable Affected System operators for Network Upgrades, the Interconnection Customer and Affected System operator shall enter into an agreement that provides for such repayment. The agreement shall specify the terms governing payments to be made by the Interconnection Customer to Affected System operator as well as the repayment by Affected System operator.

5.4 Rights Under Other Agreements
Notwithstanding any other provision of this Agreement, nothing herein shall be construed as relinquishing or foreclosing any rights, including but not limited to firm transmission rights, capacity rights, transmission congestion rights, or transmission credits, that the Interconnection Customer shall be entitled to, now or in the future, under any other agreement or tariff as a result of, or otherwise associated with, the transmission capacity, if any, created by the Network Upgrades, including the right to obtain cash reimbursements or transmission credits for transmission service that is not associated with the Small Generating Facility.

Article 6. Billing, Payment, Milestones, and Financial Security

6.1 Billing and Payment Procedures and Final Accounting

6.1.1 The Transmission Provider shall bill the Interconnection Customer for the design, engineering, construction, and procurement costs of Interconnection Facilities and Upgrades contemplated by this Agreement on a monthly basis, or as otherwise agreed by the Parties. The Interconnection Customer shall pay each bill within 30 calendar days of receipt, or as otherwise agreed to by the Parties.

6.1.2 Within three months of completing the construction and installation of the Transmission Provider's Interconnection Facilities and/or Upgrades described in the Attachments to this Agreement, the Transmission Provider shall provide the Interconnection Customer with a final accounting report of any difference between (1) the Interconnection Customer's cost responsibility for the actual cost of such facilities or Upgrades, and (2) the Interconnection Customer's previous aggregate payments to the Transmission Provider for such facilities or Upgrades. If the Interconnection Customer's cost responsibility exceeds its previous aggregate payments, the Transmission Provider shall invoice the Interconnection Customer for the amount due and the Interconnection Customer shall make payment to the Transmission Provider within 30 calendar days. If the Interconnection Customer's previous aggregate payments exceed its cost responsibility under this Agreement, the Transmission Provider shall refund to the Interconnection Customer an amount equal to the difference within 30 calendar days of the final accounting report.

6.2 Milestones

The Parties shall agree on milestones for which each Party is responsible and list them in Attachment 4 of this Agreement. A Party's obligations under this provision may be extended by agreement. If a Party anticipates that it will be unable to meet a milestone for any reason other than a Force Majeure Event, it shall immediately notify the other Party of the reason(s) for not meeting the milestone and (1) propose the earliest reasonable alternate date by which it can attain this and future milestones, and (2) requesting appropriate amendments to Attachment 4. The Party affected by the failure to meet a milestone shall not unreasonably withhold agreement to such an amendment unless it will suffer significant uncompensated economic or operational harm from the delay, (2) attainment of the same milestone has previously been delayed, or (3) it has reason to believe that the delay in meeting the milestone is intentional or unwarranted

notwithstanding the circumstances explained by the Party proposing the amendment.

6.3 Financial Security Arrangements

At least 20 Business Days prior to the commencement of the design, procurement, installation, or construction of a discrete portion of the Transmission Provider's Interconnection Facilities and Upgrades, the Interconnection Customer shall provide the Transmission Provider, at the Interconnection Customer's option, a guarantee, a surety bond, letter of credit or other form of security that is reasonably acceptable to the Transmission Provider and is consistent with the Uniform Commercial Code of the jurisdiction where the Point of Interconnection is located. Such security for payment shall be in an amount sufficient to cover the costs for constructing, designing, procuring, and installing the applicable portion of the Transmission Provider's Interconnection Facilities and Upgrades and shall be reduced on a dollar-for-dollar basis for payments made to the Transmission Provider under this Agreement during its term. In addition:

6.3.1 The guarantee must be made by an entity that meets the creditworthiness requirements of the Transmission Provider, and contain terms and conditions that guarantee payment of any amount that may be due from the Interconnection Customer, up to an agreed-to maximum amount.

6.3.2 The letter of credit or surety bond must be issued by a financial institution or insurer reasonably acceptable to the Transmission Provider and must specify a reasonable expiration date.

Article 7. Assignment, Liability, Indemnity, Force Majeure, Consequential Damages, and Default

7.1 Assignment

This Agreement may be assigned by either Party upon 15 Business Days prior written notice and opportunity to object by the other Party; provided that:

7.1.1 Either Party may assign this Agreement without the consent of the other Party to any affiliate of the assigning Party with an equal or greater credit rating and with the legal authority and operational ability to satisfy the obligations of the assigning Party under this Agreement, provided that the Interconnection Customer promptly notifies the Transmission Provider of any such assignment;

7.1.2 The Interconnection Customer shall have the right to assign this Agreement, without the consent of the Transmission Provider, for collateral security purposes to aid in providing financing for the Small Generating Facility, provided that the Interconnection Customer will promptly notify the Transmission Provider of any such assignment.

7.1.3 Any attempted assignment that violates this article is void and ineffective. Assignment shall not relieve a Party of its obligations, nor shall a Party's obligations be enlarged, in whole or in part, by reason thereof. An assignee is responsible for meeting the same financial, credit, and insurance obligations as the Interconnection Customer. Where required, consent to assignment will not be unreasonably withheld, conditioned or delayed.

7.2 Limitation of Liability

Each Party's liability to the other Party for any loss, cost, claim, injury, liability, or expense, including reasonable attorney's fees, relating to or arising from any act or omission in its performance of this Agreement, shall be limited to the amount of direct damage actually incurred. In no event shall either Party be liable to the other Party for any indirect, special, consequential, or punitive damages, except as authorized by this Agreement.

7.3 Indemnity

7.3.1 This provision protects each Party from liability incurred to third parties as a result of carrying out the provisions of this Agreement. Liability under this provision is exempt from the general limitations on liability found in article 7.2.

7.3.2 The Parties shall at all times indemnify, defend, and hold the other Party harmless from, any and all damages, losses, claims, including claims and actions relating to injury to or death of any person or damage to property, demand, suits, recoveries, costs and expenses, court costs, attorney fees, and all other obligations by or to third parties, arising out of or resulting from the other Party's action or failure to meet its obligations under this Agreement on behalf of the indemnifying Party, except in cases of gross negligence or intentional wrongdoing by the indemnified Party.

7.3.3 If an indemnified person is entitled to indemnification under this article as a result of a claim by a third party, and the indemnifying Party fails, after notice and reasonable opportunity to proceed under this article, to assume

the defense of such claim, such indemnified person may at the expense of the indemnifying Party contest, settle or consent to the entry of any judgment with respect to, or pay in full, such claim.

7.3.4 If an indemnifying party is obligated to indemnify and hold any indemnified person harmless under this article, the amount owing to the indemnified person shall be the amount of such indemnified person's actual loss, net of any insurance or other recovery.

7.3.5 Promptly after receipt by an indemnified person of any claim or notice of the commencement of any action or administrative or legal proceeding or investigation as to which the indemnity provided for in this article may apply, the indemnified person shall notify the indemnifying party of such fact. Any failure of or delay in such notification shall not affect a Party's indemnification obligation unless such failure or delay is materially prejudicial to the indemnifying party.

7.4 Consequential Damages

Other than as expressly provided for in this Agreement, neither Party shall be liable under any provision of this Agreement for any losses, damages, costs or expenses for any special, indirect, incidental, consequential, or punitive damages, including but not limited to loss of profit or revenue, loss of the use of equipment, cost of capital, cost of temporary equipment or services, whether based in whole or in part in contract, in tort, including negligence, strict liability, or any other theory of liability; provided, however, that damages for which a Party may be liable to the other Party under another agreement will not be considered to be special, indirect, incidental, or consequential damages hereunder.

7.5 Force Majeure

7.5.1 As used in this article, a Force Majeure Event shall mean "any act of God, labor disturbance, act of the public enemy, war, insurrection, riot, fire, storm or flood, explosion, breakage or accident to machinery or equipment, any order, regulation or restriction imposed by governmental, military or lawfully established civilian authorities, or any other cause beyond a Party's control. A Force Majeure Event does not include an act of negligence or intentional wrongdoing."

7.5.2 If a Force Majeure Event prevents a Party from fulfilling any obligations under this Agreement, the Party affected by the Force Majeure Event (Affected Party) shall promptly notify the other Party, either in writing or

via the telephone, of the existence of the Force Majeure Event. The notification must specify in reasonable detail the circumstances of the Force Majeure Event, its expected duration, and the steps that the Affected Party is taking to mitigate the effects of the event on its performance. The Affected Party shall keep the other Party informed on a continuing basis of developments relating to the Force Majeure Event until the event ends. The Affected Party will be entitled to suspend or modify its performance of obligations under this Agreement (other than the obligation to make payments) only to the extent that the effect of the Force Majeure Event cannot be mitigated by the use of Reasonable Efforts. The Affected Party will use Reasonable Efforts to resume its performance as soon as possible.

7.6 Default

7.6.1 No Default shall exist where such failure to discharge an obligation (other than the payment of money) is the result of a Force Majeure Event as defined in this Agreement or the result of an act or omission of the other Party. Upon a Default, the non-defaulting Party shall give written notice of such Default to the defaulting Party. Except as provided in article 7.6.2, the defaulting Party shall have 60 calendar days from receipt of the Default notice within which to cure such Default; provided however, if such Default is not capable of cure within 60 calendar days, the defaulting Party shall commence such cure within 20 calendar days after notice and continuously and diligently complete such cure within six months from receipt of the Default notice; and, if cured within such time, the Default specified in such notice shall cease to exist.

7.6.2 If a Default is not cured as provided in this article, or if a Default is not capable of being cured within the period provided for herein, the non-defaulting Party shall have the right to terminate this Agreement by written notice at any time until cure occurs, and be relieved of any further obligation hereunder and, whether or not that Party terminates this Agreement, to recover from the defaulting Party all amounts due hereunder, plus all other damages and remedies to which it is entitled at law or in equity. The provisions of this article will survive termination of this Agreement.

Article 8. Insurance

8.1 The Interconnection Customer shall, at its own expense, maintain in force general

liability insurance without any exclusion for liabilities related to the interconnection undertaken pursuant to this Agreement. The amount of such insurance shall be sufficient to insure against all reasonably foreseeable direct liabilities given the size and nature of the generating equipment being interconnected, the interconnection itself, and the characteristics of the system to which the interconnection is made. The Interconnection Customer shall obtain additional insurance only if necessary as a function of owning and operating a generating facility. Such insurance shall be obtained from an insurance provider authorized to do business in the State where the interconnection is located. Certification that such insurance is in effect shall be provided upon request of the Transmission Provider, except that the Interconnection Customer shall show proof of insurance to the Transmission Provider no later than ten Business Days prior to the anticipated commercial operation date. An Interconnection Customer of sufficient credit-worthiness may propose to self-insure for such liabilities, and such a proposal shall not be unreasonably rejected.

8.2 The Transmission Provider agrees to maintain general liability insurance or self-insurance consistent with the Transmission Provider's commercial practice. Such insurance or self-insurance shall not exclude coverage for the Transmission Provider's liabilities undertaken pursuant to this Agreement.

8.3 The Parties further agree to notify each other whenever an accident or incident occurs resulting in any injuries or damages that are included within the scope of coverage of such insurance, whether or not such coverage is sought.

Article 9. Confidentiality

9.1 Confidential Information shall mean any confidential and/or proprietary information provided by one Party to the other Party that is clearly marked or otherwise designated "Confidential." For purposes of this Agreement all design, operating specifications, and metering data provided by the Interconnection Customer shall be deemed Confidential Information regardless of whether it is clearly marked or otherwise designated as such.

9.2 Confidential Information does not include information previously in the public domain, required to be publicly submitted or divulged by Governmental Authorities (after notice to the other Party and after exhausting any opportunity to oppose such publication or release), or necessary to be divulged in an action to enforce this Agreement. Each Party receiving Confidential Information shall hold such information in confidence and shall not disclose it to any third party nor to

the public without the prior written authorization from the Party providing that information, except to fulfill obligations under this Agreement, or to fulfill legal or regulatory requirements.

9.2.1 Each Party shall employ at least the same standard of care to protect Confidential Information obtained from the other Party as it employs to protect its own Confidential Information.

9.2.2 Each Party is entitled to equitable relief, by injunction or otherwise, to enforce its rights under this provision to prevent the release of Confidential Information without bond or proof of damages, and may seek other remedies available at law or in equity for breach of this provision.

9.3 Notwithstanding anything in this article to the contrary, and pursuant to 18 CFR § 1b.20, if FERC, during the course of an investigation or otherwise, requests information from one of the Parties that is otherwise required to be maintained in confidence pursuant to this Agreement, the Party shall provide the requested information to FERC, within the time provided for in the request for information. In providing the information to FERC, the Party may, consistent with 18 CFR § 388.112, request that the information be treated as confidential and non-public by FERC and that the information be withheld from public disclosure. Parties are prohibited from notifying the other Party to this Agreement prior to the release of the Confidential Information to FERC. The Party shall notify the other Party to this Agreement when it is notified by FERC that a request to release Confidential Information has been received by FERC, at which time either of the Parties may respond before such information would be made public, pursuant to 18 CFR § 388.112. Requests from a state regulatory body conducting a confidential investigation shall be treated in a similar manner if consistent with the applicable state rules and regulations.

Article 10. Disputes

10.1 The Parties agree to attempt to resolve all disputes arising out of the interconnection process according to the provisions of this article.

10.2 In the event of a dispute, either Party shall provide the other Party with a written Notice of Dispute. Such Notice shall describe in detail the nature of the dispute.

10.3 If the dispute has not been resolved within two Business Days after receipt of the Notice, either Party may contact FERC's Dispute Resolution Service (DRS) for

assistance in resolving the dispute.

10.4 The DRS will assist the Parties in either resolving their dispute or in selecting an appropriate dispute resolution venue (e.g., mediation, settlement judge, early neutral evaluation, or technical expert) to assist the Parties in resolving their dispute. DRS can be reached at 1-877-337-2237 or via the internet at http://www.ferc.gov/legal/adr.asp.

10.5 Each Party agrees to conduct all negotiations in good faith and will be responsible for one-half of any costs paid to neutral third-parties.

10.6 If neither Party elects to seek assistance from the DRS, or if the attempted dispute resolution fails, then either Party may exercise whatever rights and remedies it may have in equity or law consistent with the terms of this Agreement.

Article 11. Taxes

11.1 The Parties agree to follow all applicable tax laws and regulations, consistent with FERC policy and Internal Revenue Service requirements.

11.2 Each Party shall cooperate with the other to maintain the other Party's tax status. Nothing in this Agreement is intended to adversely affect the Transmission Provider's tax exempt status with respect to the issuance of bonds including, but not limited to, local furnishing bonds.

Article 12. Miscellaneous

12.1 Governing Law, Regulatory Authority, and Rules
The validity, interpretation and enforcement of this Agreement and each of its provisions shall be governed by the laws of the state of _____ (where the Point of Interconnection is located), without regard to its conflicts of law principles. This Agreement is subject to all Applicable Laws and Regulations. Each Party expressly reserves the right to seek changes in, appeal, or otherwise contest any laws, orders, or regulations of a Governmental Authority.

12.2 Amendment
The Parties may amend this Agreement by a written instrument duly executed by both Parties, or under article 12.12 of this Agreement.

12.3 No Third-Party Beneficiaries

This Agreement is not intended to and does not create rights, remedies, or benefits of any character whatsoever in favor of any persons, corporations, associations, or entities other than the Parties, and the obligations herein assumed are solely for the use and benefit of the Parties, their successors in interest and where permitted, their assigns.

12.4 Waiver

12.4.1 The failure of a Party to this Agreement to insist, on any occasion, upon strict performance of any provision of this Agreement will not be considered a waiver of any obligation, right, or duty of, or imposed upon, such Party.

12.4.2 Any waiver at any time by either Party of its rights with respect to this Agreement shall not be deemed a continuing waiver or a waiver with respect to any other failure to comply with any other obligation, right, duty of this Agreement. Termination or default of this Agreement for any reason by Interconnection Customer shall not constitute a waiver of the Interconnection Customer's legal rights to obtain an interconnection from the Transmission Provider. Any waiver of this Agreement shall, if requested, be provided in writing.

12.5 Entire Agreement

This Agreement, including all Attachments, constitutes the entire agreement between the Parties with reference to the subject matter hereof, and supersedes all prior and contemporaneous understandings or agreements, oral or written, between the Parties with respect to the subject matter of this Agreement. There are no other agreements, representations, warranties, or covenants which constitute any part of the consideration for, or any condition to, either Party's compliance with its obligations under this Agreement.

12.6 Multiple Counterparts

This Agreement may be executed in two or more counterparts, each of which is deemed an original but all constitute one and the same instrument.

12.7 No Partnership

This Agreement shall not be interpreted or construed to create an association, joint venture, agency relationship, or partnership between the Parties or to impose any partnership obligation or partnership liability upon either Party. Neither Party shall have any right, power or authority to enter into any agreement or undertaking

for, or act on behalf of, or to act as or be an agent or representative of, or to otherwise bind, the other Party.

12.8 Severability

If any provision or portion of this Agreement shall for any reason be held or adjudged to be invalid or illegal or unenforceable by any court of competent jurisdiction or other Governmental Authority, (1) such portion or provision shall be deemed separate and independent, (2) the Parties shall negotiate in good faith to restore insofar as practicable the benefits to each Party that were affected by such ruling, and (3) the remainder of this Agreement shall remain in full force and effect.

12.9 Security Arrangements

Infrastructure security of electric system equipment and operations and control hardware and software is essential to ensure day-to-day reliability and operational security. FERC expects all Transmission Providers, market participants, and Interconnection Customers interconnected to electric systems to comply with the recommendations offered by the President's Critical Infrastructure Protection Board and, eventually, best practice recommendations from the electric reliability authority. All public utilities are expected to meet basic standards for system infrastructure and operational security, including physical, operational, and cyber-security practices.

12.10 Environmental Releases

Each Party shall notify the other Party, first orally and then in writing, of the release of any hazardous substances, any asbestos or lead abatement activities, or any type of remediation activities related to the Small Generating Facility or the Interconnection Facilities, each of which may reasonably be expected to affect the other Party. The notifying Party shall (1) provide the notice as soon as practicable, provided such Party makes a good faith effort to provide the notice no later than 24 hours after such Party becomes aware of the occurrence, and (2) promptly furnish to the other Party copies of any publicly available reports filed with any governmental authorities addressing such events.

12.11 Subcontractors

Nothing in this Agreement shall prevent a Party from utilizing the services of any subcontractor as it deems appropriate to perform its obligations under this Agreement; provided, however, that each Party shall require its subcontractors to comply with all applicable terms and conditions of this Agreement in providing such services and each Party shall remain primarily liable to the other Party for the performance of such subcontractor.

12.11.1 The creation of any subcontract relationship shall not relieve the hiring Party of any of its obligations under this Agreement. The hiring Party shall be fully responsible to the other Party for the acts or omissions of any subcontractor the hiring Party hires as if no subcontract had been made; provided, however, that in no event shall the Transmission Provider be liable for the actions or inactions of the Interconnection Customer or its subcontractors with respect to obligations of the Interconnection Customer under this Agreement. Any applicable obligation imposed by this Agreement upon the hiring Party shall be equally binding upon, and shall be construed as having application to, any subcontractor of such Party.

12.11.2 The obligations under this article will not be limited in any way by any limitation of subcontractor's insurance.

12.12 Reservation of Rights

The Transmission Provider shall have the right to make a unilateral filing with FERC to modify this Agreement with respect to any rates, terms and conditions, charges, classifications of service, rule or regulation under section 205 or any other applicable provision of the Federal Power Act and FERC's rules and regulations thereunder, and the Interconnection Customer shall have the right to make a unilateral filing with FERC to modify this Agreement under any applicable provision of the Federal Power Act and FERC's rules and regulations; provided that each Party shall have the right to protest any such filing by the other Party and to participate fully in any proceeding before FERC in which such modifications may be considered. Nothing in this Agreement shall limit the rights of the Parties or of FERC under sections 205 or 206 of the Federal Power Act and FERC's rules and regulations, except to the extent that the Parties otherwise agree as provided herein.

Article 13. Notices

13.1 General

Unless otherwise provided in this Agreement, any written notice, demand, or request required or authorized in connection with this Agreement ("Notice") shall be deemed properly given if delivered in person, delivered by recognized national currier service, or sent by first class mail, postage prepaid, to the person specified

below:

If to the Interconnection Customer:
Interconnection Customer:
_____
Attention: _____
Address:
_____
City: _____ State:_____
Zip:_____
Phone: _____ Fax: _____

If to the Transmission Provider:
Transmission Provider:
_____
Attention: _____
Address:
_____
City: _____ State:_____
Zip:_____
Phone: _____ Fax: _____

13.2 Billing and Payment
Billings and payments shall be sent to the addresses set out below:

Interconnection Customer: _____
Attention: _____
Address:
_____
City: _____ State:_____
Zip:_____

Transmission Provider:
_____
Attention: _____
Address:
_____
City: _____ State:_____
Zip:_____

13.3 Alternative Forms of Notice

Any notice or request required or permitted to be given by either Party to the other and not required by this Agreement to be given in writing may be so given by telephone, facsimile or e-mail to the telephone numbers and e-mail addresses set out below:

If to the Interconnection Customer:

Interconnection Customer:

_____

Attention: _____

Address:

_____

City: _____ State:_____

Zip:_____

Phone: _____ Fax: _____

If to the Transmission Provider:

Transmission Provider:

_____

Attention: _____

Address:

_____

City: _____ State:_____

Zip:_____

Phone: _____ Fax: _____

13.4 Designated Operating Representative

The Parties may also designate operating representatives to conduct the communications which may be necessary or convenient for the administration of this Agreement. This person will also serve as the point of contact with respect to operations and maintenance of the Party's facilities.

Interconnection Customer's Operating Representative:

Interconnection Customer:

_____

Attention: _____

Address:

_____

City: _____ State:_____

Zip:_____
Phone: _____ Fax: _____

Transmission Provider's Operating Representative:

Transmission Provider:

_____
Attention: _____
Address:

_____
City: _____ State:_____
Zip:_____
Phone: _____ Fax: _____

13.5 Changes to the Notice Information
Either Party may change this information by giving five Business Days written notice prior to the effective date of the change.

Article 14. Signatures

IN WITNESS WHEREOF, the Parties have caused this Agreement to be executed by their respective duly authorized representatives.

For the Transmission Provider

Name:_____

Title: _____

Date: _____

For the Interconnection Customer

Name:_____

Title: _____

Date: _____

Attachment 1

Glossary of Terms

Affected System—An electric system other than the Transmission Provider's Transmission System that may be affected by the proposed interconnection.

Applicable Laws and Regulations—All duly promulgated applicable federal, state and local laws, regulations, rules, ordinances, codes, decrees, judgments, directives, or judicial or administrative orders, permits and other duly authorized actions of any Governmental Authority.

Business Day—Monday through Friday, excluding Federal Holidays.

Default—The failure of a breaching Party to cure its breach under the Small Generator Interconnection Agreement.

Distribution System—The Transmission Provider's facilities and equipment used to transmit electricity to ultimate usage points such as homes and industries directly from nearby generators or from interchanges with higher voltage transmission networks which transport bulk power over longer distances. The voltage levels at which Distribution Systems operate differ among areas.

Distribution Upgrades—The additions, modifications, and upgrades to the Transmission Provider's Distribution System at or beyond the Point of Interconnection to facilitate interconnection of the Small Generating Facility and render the transmission service necessary to effect the Interconnection Customer's wholesale sale of electricity in interstate commerce. Distribution Upgrades do not include Interconnection Facilities.

Good Utility Practice—Any of the practices, methods and acts engaged in or approved by a significant portion of the electric industry during the relevant time period, or any of the practices, methods and acts which, in the exercise of reasonable judgment in light of the facts known at the time the decision was made, could have been expected to accomplish the desired result at a reasonable cost consistent with good business practices, reliability, safety and expedition. Good Utility Practice is not intended to be limited to the optimum practice, method, or act to the exclusion of all others, but rather to be acceptable practices, methods, or acts generally accepted in the region.

Governmental Authority—Any federal, state, local or other governmental regulatory or administrative agency, court, commission, department, board, or other governmental subdivision, legislature, rulemaking board, tribunal, or other governmental authority having jurisdiction over the Parties, their respective facilities, or the respective services they provide, and exercising or entitled to exercise any administrative, executive, police, or taxing authority or power; provided, however, that such term does not include the Interconnection Customer, the Interconnection Provider, or any Affiliate thereof.

Interconnection Customer—Any entity, including the Transmission Provider, the Transmission Owner or any of the affiliates or subsidiaries of either, that proposes to interconnect its Small Generating Facility with the Transmission Provider's Transmission System.

Interconnection Facilities—The Transmission Provider's Interconnection Facilities and the Interconnection Customer's Interconnection Facilities. Collectively, Interconnection Facilities include all facilities and equipment between the Small Generating Facility and the Point of Interconnection, including any modification, additions or upgrades that are necessary to physically and electrically interconnect the Small Generating Facility to the Transmission Provider's Transmission System. Interconnection Facilities are sole use facilities and shall not include Distribution Upgrades or Network Upgrades.

Interconnection Request—The Interconnection Customer's request, in accordance with the Tariff, to interconnect a new Small Generating Facility, or to increase the capacity of, or make a Material Modification to the operating characteristics of, an existing Small Generating Facility that is interconnected with the Transmission Provider's Transmission System.

Material Modification—A modification that has a material impact on the cost or timing of any Interconnection Request with a later queue priority date.

Network Upgrades—Additions, modifications, and upgrades to the Transmission Provider's Transmission System required at or beyond the point at which the Small Generating Facility interconnects with the Transmission Provider's Transmission System to accommodate the interconnection of the Small Generating Facility with the Transmission Provider's Transmission System. Network Upgrades do not include Distribution Upgrades.

Operating Requirements—Any operating and technical requirements that may be applicable due to Regional Transmission Organization, Independent System Operator, control area, or the Transmission Provider's requirements, including those set forth in the Small Generator Interconnection Agreement.

Party or Parties—The Transmission Provider, Transmission Owner, Interconnection Customer or any combination of the above.

Point of Interconnection—The point where the Interconnection Facilities connect with the Transmission Provider's Transmission System.

Reasonable Efforts—With respect to an action required to be attempted or taken by a Party under the Small Generator Interconnection Agreement, efforts that are timely and consistent with Good Utility Practice and are otherwise substantially equivalent to those a Party would use to protect its own interests.

Small Generating Facility—The Interconnection Customer's device for the production of electricity identified in the Interconnection Request, but shall not include the Interconnection Customer's Interconnection Facilities.

Tariff—The Transmission Provider or Affected System's Tariff through which open access transmission service and Interconnection Service are offered, as filed with the FERC, and as amended or supplemented from time to time, or any successor tariff.

Transmission Owner—The entity that owns, leases or otherwise possesses an interest in the portion of the Transmission System at the Point of Interconnection and may be a Party to the Small Generator Interconnection Agreement to the extent necessary.

Transmission Provider—The public utility (or its designated agent) that owns, controls, or operates transmission or distribution facilities used for the transmission of electricity in interstate commerce and provides transmission service under the Tariff. The term Transmission Provider should be read to include the Transmission Owner when the Transmission Owner is separate from the Transmission Provider.

Transmission System—The facilities owned, controlled or operated by the Transmission Provider or the Transmission Owner that are used to provide transmission service under the Tariff.

Upgrades—The required additions and modifications to the Transmission Provider's Transmission System at or beyond the Point of Interconnection. Upgrades may be Network Upgrades or Distribution Upgrades. Upgrades do not include Interconnection Facilities.

Attachment 2

Description and Costs of the Small Generating Facility, Interconnection Facilities, and Metering Equipment

Equipment, including the Small Generating Facility, Interconnection Facilities, and metering equipment shall be itemized and identified as being owned by the Interconnection Customer, the Transmission Provider, or the Transmission Owner. The Transmission Provider will provide a best estimate itemized cost, including overheads, of its Interconnection Facilities and metering equipment, and a best estimate itemized cost of the annual operation and maintenance expenses associated with its Interconnection Facilities and metering equipment.

Attachment 3

One-line Diagram Depicting the Small Generating Facility, Interconnection Facilities, Metering Equipment, and Upgrades

Attachment 4

Milestones

In-Service Date: _____

Critical milestones and responsibility as agreed to by the Parties:

	Milestone/Date	Responsible Party
(1)	_____	_____
(2)	_____	_____
(3)	_____	_____
(4)	_____	_____
(5)	_____	_____
(6)	_____	_____
(7)	_____	_____
(8)	_____	_____
(9)	_____	_____
(10)	_____	_____

Agreed to by:

For the Transmission Provider_____ Date_____

For the Transmission Owner (If Applicable) _____
Date_____

For the Interconnection Customer_____ Date_____

Attachment 5

Additional Operating Requirements for the Transmission Provider's Transmission System and Affected Systems Needed to Support the Interconnection Customer's Needs

The Transmission Provider shall also provide requirements that must be met by the Interconnection Customer prior to initiating parallel operation with the Transmission Provider's Transmission System.

Attachment 6

Transmission Provider's Description of its Upgrades and Best Estimate of Upgrade Costs

The Transmission Provider shall describe Upgrades and provide an itemized best estimate of the cost, including overheads, of the Upgrades and annual operation and

maintenance expenses associated with such Upgrades. The Transmission Provider shall functionalize Upgrade costs and annual expenses as either transmission or distribution related.

[FR Doc. 2013–01366 Filed 1–31–13; 8:45 am]

BILLING CODE 6717–01–P

Reader Aids

Federal Register

Vol. 78, No. 22

Friday, February 1, 2013

CUSTOMER SERVICE AND INFORMATION

Federal Register/Code of Federal Regulations	
General Information, indexes and other finding aids	**202–741–6000**
Laws	**741–6000**
Presidential Documents	
Executive orders and proclamations	**741–6000**
The United States Government Manual	**741–6000**
Other Services	
Electronic and on-line services (voice)	**741–6020**
Privacy Act Compilation	**741–6064**
Public Laws Update Service (numbers, dates, etc.)	**741–6043**
TTY for the deaf-and-hard-of-hearing	**741–6086**

ELECTRONIC RESEARCH

World Wide Web

Full text of the daily Federal Register, CFR and other publications is located at: **www.fdsys.gov.**

Federal Register information and research tools, including Public Inspection List, indexes, and links to GPO Access are located at: **www.ofr.gov.**

E-mail

FEDREGTOC-L (Federal Register Table of Contents LISTSERV) is an open e-mail service that provides subscribers with a digital form of the Federal Register Table of Contents. The digital form of the Federal Register Table of Contents includes HTML and PDF links to the full text of each document.

To join or leave, go to **http://listserv.access.gpo.gov** and select *Online mailing list archives, FEDREGTOC-L, Join or leave the list (or change settings);* then follow the instructions.

PENS (Public Law Electronic Notification Service) is an e-mail service that notifies subscribers of recently enacted laws.

To subscribe, go to **http://listserv.gsa.gov/archives/publaws-l.html** and select *Join or leave the list (or change settings);* then follow the instructions.

FEDREGTOC-L and **PENS** are mailing lists only. We cannot respond to specific inquiries.

Reference questions. Send questions and comments about the Federal Register system to: **fedreg.info@nara.gov**

The Federal Register staff cannot interpret specific documents or regulations.

Reminders. Effective January 1, 2009, the Reminders, including Rules Going Into Effect and Comments Due Next Week, no longer appear in the Reader Aids section of the Federal Register. This information can be found online at **http://www.regulations.gov.**

CFR Checklist. Effective January 1, 2009, the CFR Checklist no longer appears in the Federal Register. This information can be found online at **http://bookstore.gpo.gov/.**

FEDERAL REGISTER PAGES AND DATE, FEBRUARY

7255–7640 1

CFR PARTS AFFECTED DURING FEBRUARY

At the end of each month the Office of the Federal Register publishes separately a List of CFR Sections Affected (LSA), which lists parts and sections affected by documents published since the revision date of each title.

LIST OF PUBLIC LAWS

This is a continuing list of public bills from the current session of Congress which have become Federal laws. It may be used in conjunction with "P L U S" (Public Laws Update Service) on 202–741–6043. This list is also available online at *http://www.archives.gov/federal-register/laws*.

The text of laws is not published in the **Federal Register** but may be ordered in "slip law" (individual pamphlet) form from the Superintendent of Documents, U.S. Government Printing Office, Washington, DC 20402 (phone, 202–512–1808). The text will also be made available on the Internet from GPO's Federal Digital System (FDsys) at *http://www.gpo.gov/fdsys*. Some laws may not yet be available.

H.R. 152/P.L. 113–2
Making supplemental appropriations for the fiscal year ending September 30, 2013, to improve and streamline disaster assistance for Hurricane Sandy, and for other purposes. (Jan. 29, 2013; 127 Stat. 4)

Last List January 23, 2013

Public Laws Electronic Notification Service (PENS)

PENS is a free electronic mail notification service of newly enacted public laws. To subscribe, go to *http://listserv.gsa.gov/archives/publaws-l.html*

Note: This service is strictly for E-mail notification of new laws. The text of laws is not available through this service. **PENS** cannot respond to specific inquiries sent to this address.

TABLE OF EFFECTIVE DATES AND TIME PERIODS—FEBRUARY 2013

This table is used by the Office of the Federal Register to compute certain dates, such as effective dates and comment deadlines, which appear in agency documents. In computing these dates, the day after publication is counted as the first day.

When a date falls on a weekend or holiday, the next Federal business day is used. (See 1 CFR 18.17)

A new table will be published in the first issue of each month.

Date of FR publication	15 days after publication	21 days after publication	30 days after publication	35 days after publication	45 days after publication	60 days after publication	90 days after publication
February 1	Feb 19	Feb 22	Mar 4	Mar 8	Mar 18	Apr 2	May 2
February 4	Feb 19	Feb 25	Mar 6	Mar 11	Mar 21	Apr 5	May 6
February 5	Feb 20	Feb 26	Mar 7	Mar 12	Mar 22	Apr 8	May 6
February 6	Feb 21	Feb 27	Mar 8	Mar 13	Mar 25	Apr 8	May 7
February 7	Feb 22	Feb 28	Mar 11	Mar 14	Mar 25	Apr 8	May 8
February 8	Feb 25	Mar 1	Mar 11	Mar 15	Mar 25	Apr 9	May 9
February 11	Feb 26	Mar 4	Mar 13	Mar 18	Mar 28	Apr 12	May 13
February 12	Feb 27	Mar 5	Mar 14	Mar 19	Mar 29	Apr 15	May 13
February 13	Feb 28	Mar 6	Mar 15	Mar 20	Apr 1	Apr 15	May 14
February 14	Mar 1	Mar 7	Mar 18	Mar 21	Apr 1	Apr 15	May 15
February 15	Mar 4	Mar 8	Mar 18	Mar 22	Apr 1	Apr 16	May 16
February 19	Mar 6	Mar 12	Mar 21	Mar 26	Apr 5	Apr 22	May 20
February 20	Mar 7	Mar 13	Mar 22	Mar 27	Apr 8	Apr 22	May 21
February 21	Mar 8	Mar 14	Mar 25	Mar 28	Apr 8	Apr 22	May 22
February 22	Mar 11	Mar 15	Mar 25	Mar 29	Apr 8	Apr 23	May 23
February 25	Mar 12	Mar 18	Mar 27	Apr 1	Apr 11	Apr 26	May 28
February 26	Mar 13	Mar 19	Mar 28	Apr 2	Apr 12	Apr 29	May 28
February 27	Mar 14	Mar 20	Mar 29	Apr 3	Apr 15	Apr 29	May 28
February 28	Mar 15	Mar 21	Apr 1	Apr 4	Apr 15	Apr 29	May 29