AUTHENTICATED
U.S. GOVERNMENT
INFORMATION
GPO

FEDERAL REGISTER

Vol. 78 Friday,
No. 3 January 4, 2013

Part II

Department of Energy

Federal Energy Regulatory Commission

18 CFR Part 40

Revisions to Electric Reliability Organization Definition of Bulk Electric System and Rules of Procedure; Final Rule

DEPARTMENT OF ENERGY

Federal Energy Regulatory Commission

18 CFR Part 40

[Docket Nos. RM12–6–000 and RM12–7–000; Order No. 773]

Revisions to Electric Reliability Organization Definition of Bulk Electric System and Rules of Procedure

AGENCY: Federal Energy Regulatory Commission.

ACTION: Final rule.

SUMMARY: In this Final Rule, pursuant to section 215 of the Federal Power Act, the Federal Energy Regulatory Commission (Commission) approves modifications to the currently-effective definition of ''bulk electric system'' developed by the North American Electric Reliability Corporation (NERC), the Commission-certified Electric Reliability Organization. The Commission finds that the modified definition of ''bulk electric system'' removes language allowing for regional discretion in the currently-effective bulk electric system definition and establishes a bright-line threshold that includes all facilities operated at or above 100 kV. The modified definition also identifies specific categories of facilities and configurations as inclusions and exclusions to provide clarity in the definition of ''bulk electric system.''

In this Final Rule, the Commission also approves: NERC's revisions to its Rules of Procedure, which create an exception process to add elements to, or remove elements from, the definition of ''bulk electric system'' on a case-by-case basis; NERC's form entitled ''Detailed Information To Support an Exception Request'' that entities will use to support requests for exception from the ''bulk electric system'' definition; and NERC's implementation plan for the revised ''bulk electric system'' definition.

DATES: This Final Rule will become effective March 5, 2013.

FOR FURTHER INFORMATION CONTACT:

Susan Morris (Technical Information), Office of Electric Reliability, Division of Reliability Standards, Federal Energy Regulatory Commission, 888 First Street NE., Washington, DC 20426, Telephone: (202) 502–6803.

Nicholas Snyder (Technical Information), Office of Energy Market Regulation, Division of Electric Power Regulation—Central, Federal Energy Regulatory Commission, 888 First Street NE., Washington, DC 20426, Telephone: (202) 502–6408.

Robert Stroh (Legal Information), Office of the General Counsel, Federal Energy Regulatory Commission, 888 First Street NE., Washington, DC 20426, Telephone: (202) 502–8473.

SUPPLEMENTARY INFORMATION:

141 FERC ¶ 61,236

Before Commissioners: Jon Wellinghoff, Chairman; Philip D. Moeller, John R. Norris, and Cheryl A. LaFleur.

FINAL RULE

(Issued December 20, 2012)

Table of Contents

I. Background ..... 5.
A. Section 215 of the FPA ..... 5.
B. Order No. 693 ..... 6.
C. Order No. 743 ..... 8.
D. NERC Petitions ..... 11.
1. Revised Definition of Bulk Electric System ..... 12.
2. NERC Petition for Approval of Revisions to Rules of Procedure To Adopt an Exception Process ..... 26.
E. Commission NOPR ..... 29.
II. Discussion ..... 31.
A. Approval of the Revised Bulk Electric System Definition ..... 32.
NOPR Proposal ..... 32.
Comments ..... 33.
Commission Determination ..... 38.
B. The Core Definition of Bulk Electric System ..... 45.
NOPR Proposal ..... 45.
Comments ..... 46.
C. Local Distribution ..... 57.
Comments ..... 58.
Commission Determination ..... 66.
D. Inclusions and Exclusions in the Definition of Bulk Electric System ..... 74.
1. Inclusion I1 (Transformers) ..... 75.
Commission Determination ..... 80.
2. Inclusion I2 (Generating Resources) ..... 83.
3. Inclusion I3 (Blackstart Resources) ..... 97.
4. Inclusion I4 (Dispersed Power Producing Resources) ..... 104.
5. Inclusion I5 (Static or Dynamic Reactive Power Devices) ..... 116.
Exclusions ..... 125.
6. Exclusion E1 (Radial Systems) ..... 127.
7. Exclusion E2 (Behind the Meter Generation) ..... 178.
8. Exclusion E3 (Local Networks) ..... 185.
9. Exclusion E4 (Reactive Power Devices) ..... 235.
E. The NERC Rules of Procedure Exception Process, RM12–7–000 ..... 238.
NOPR Proposal ..... 238.
1. How Entities Will Review and Seek Inclusion of Necessary Elements ..... 263.
2. NERC Role in Identifying Necessary Elements ..... 270.
3. Commission Role in Identifying Necessary Elements ..... 279.
4. Technical Review Panel ..... 289.
NOPR Proposal ..... 289.
5. Use of Industry Subject Matter Experts ..... 295.
6. NERC's Detailed Information Form ..... 298.
7. NERC's Implementation Plan ..... 302.
NOPR Proposal ..... 302.
8. NERC List of Facilities Granted Exceptions ..... 305.
9. Declassification of Facilities ..... 311.

III. Information Collection Statement ..... 319.
IV. Regulatory Flexibility Act Analysis ..... 333.
V. Environmental Analysis ..... 339.
VI. Document Availability ..... 340.
VII. Effective Date and Congressional Notification ..... 343.

1. Pursuant to section 215(d) of the Federal Power Act (FPA),[1] the Commission approves modifications to the currently-effective definition of ''bulk electric system'' developed by the North American Electric Reliability Corporation (NERC), the Commission-certified Electric Reliability Organization (ERO). The Commission finds that the modified definition of ''bulk electric system'' improves upon the currently-effective definition by establishing a bright-line threshold that includes all facilities operated at or above 100 kV and removing language that allows for broad regional discretion. The modified definition also provides improved clarity by identifying specific categories of facilities and configurations as inclusions and exclusions to the definition of ''bulk electric system.''

2. We believe that the proposed ''core'' definition, together with the more granular inclusions and exclusions, should produce consistency in identifying bulk electric system elements across the reliability regions. In addition, we find that NERC's proposed case-by-case exception process to add elements to, and remove elements from, the definition of the bulk electric system adds transparency and uniformity to the determination of what constitutes the bulk electric system.

3. We recognize the substantial work invested by NERC and industry participants in developing the modified bulk electric system definition. We also appreciate that NERC timely submitted the revised definition within the twelve month time frame directed by the Commission in the underlying order, Order No. 743, which tasked NERC with this project.[2] We believe that NERC and industry's efforts provide a technically grounded and legally supportable foundation for identifying elements and facilities that make up the bulk electric system. Other highlights of the Final Rule include:

- Accepts NERC's revisions to its Rules of Procedure, which creates an exception procedure to add elements to, or remove elements from, the definition of ''bulk electric system'' on a case-by-case basis;
- approves NERC's implementation plan for the revised ''bulk electric system'' definition;
- approves NERC's form entitled ''Detailed Information to Support an Exception Request'' that entities will use to support requests for exception from the ''bulk electric system'' definition;
- finds that the Commission can designate sub-100 kV facilities, or other facilities, as part of the bulk electric system, provided that the Commission provides opportunity for notice and comment; and
- establishes a process pursuant to which an entity can seek a determination by the Commission whether facilities are ''used in local distribution'' as set forth in the Federal Power Act.

4. In the Notice of Proposed Rulemaking (NOPR), the Commission requested comment on certain aspects of NERC's petition to better understand the application of the ''core'' definition, as well as the specific inclusions and exclusions.[3] The explanations provided by NERC and other entities in their comments have assisted in our understanding of the parameters of the definition, and we adopt many of these explanations in the Final Rule. However, in two particular circumstances we believe further action is necessary. We direct NERC to implement the bulk electric system definition consistent with the Commission determinations below. Specifically, we direct NERC to implement the exclusions for radial systems and local networks so that they do not apply to tie-lines for bulk electric system generators. In addition, we direct NERC to modify the local network exclusion to remove the 100 kV minimum operating voltage to allow systems that include one or more looped configurations connected below 100 kV, (as shown in figures 3 and 5 below) to be eligible for the local network exclusion. Further explanation of these configurations and the rationale for our determinations is provided below.

I. Background

A. Section 215 of the FPA

5. Section 215 of the FPA requires a Commission-certified ERO to develop mandatory and enforceable Reliability Standards, subject to Commission review and approval. Once approved, the Reliability Standards may be enforced by the ERO, subject to Commission oversight, or by the Commission independently.[4] The Commission established a process to select and certify an ERO[5] and, subsequently, certified NERC as the ERO.[6]

B. Order No. 693

6. On March 16, 2007, in Order No. 693, pursuant to section 215(d) of the FPA, the Commission approved 83 of 107 proposed Reliability Standards, six of the eight proposed regional differences, and the NERC Glossary, which includes NERC's definition of bulk electric system.[7] That definition provides:

> As defined by the Regional Reliability Organization, the electrical generation resources, transmission lines, interconnections with neighboring systems, and associated equipment, generally operated at voltages of 100 kV or higher. Radial transmission facilities serving only load with one transmission source are generally not included in this definition.[8]

7. In approving NERC's definition of bulk electric system, the Commission stated that ''at least for an initial period, the Commission will rely on the NERC definition of bulk electric system and NERC's registration process to provide as much certainty as possible regarding the applicability to and the responsibility of specific entities to

[1] 16 U.S.C. 824o(d) (2006).

[2] *Revision to Electric Reliability Organization Definition of Bulk Electric System,* Order No. 743, 133 FERC ¶ 61,150 (2010), *order on reh'g,* Order No. 743–A, 134 FERC ¶ 61,210 (2011).

[3] *Revision to Electric Reliability Organization Definition of Bulk Electric System and Rules of Procedure,* Notice of Proposed Rulemaking, 77 FR 39857 (July 5, 2012) 139 FERC ¶ 61,247 (2012) (NOPR).

[4] *See* 16 U.S.C. 824o(e)(3) (2006).

[5] *Rules Concerning Certification of the Electric Reliability Organization; and Procedures for the Establishment, Approval and Enforcement of Electric Reliability Standards,* Order No. 672, FERC Stats. & Regs. ¶ 31,204, *order on reh'g,* Order No. 672–A, FERC Stats. & Regs. ¶ 31,212 (2006).

[6] *North American Electric Reliability Corp.,* 116 FERC ¶ 61,062 (2006), *order on reh'g and compliance,* 117 FERC ¶ 61,126 (2006) (certifying NERC as the ERO responsible for the development and enforcement of mandatory Reliability Standards), *aff'd sub nom. Alcoa Inc.* v. *FERC,* 564 F.3d 1342 (D.C. Cir. 2009).

[7] *Mandatory Reliability Standards for the Bulk-Power System,* Order No. 693, FERC Stats. & Regs. ¶ 31,242, *order on reh'g,* Order No. 693–A, 120 FERC ¶ 61,053 (2007).

[8] Order No. 693, FERC Stats. & Regs. ¶ 31,242 at P 75 n.47.

comply with the Reliability Standards.'' [9] The Commission also stated that ''[it] remains concerned about the need to address the potential for gaps in coverage of facilities.'' [10]

C. Order No. 743

8. On November 18, 2010, the Commission revisited the definition of ''bulk electric system'' in Order No. 743, which directed NERC, through NERC's Reliability Standards Development Process, to revise its definition of the term ''bulk electric system'' to ensure that the definition encompasses all facilities necessary for operating an interconnected transmission network.[11] The Commission also directed NERC to address the Commission's technical and policy concerns. Among the Commission's concerns were inconsistencies in the application of the definition and a lack of oversight and exclusion of facilities from the bulk electric system required for the operation of the interconnected transmission network. In Order No. 743, the Commission concluded that the best way to address these concerns was to eliminate the Regional Entity discretion to define bulk electric system without NERC or Commission review, maintain a bright-line threshold that includes all facilities operated at or above 100 kV except defined radial facilities, and adopt an exemption process and criteria for removing from the bulk electric system facilities that are not necessary for operating the interconnected transmission network. In Order No. 743, the Commission allowed NERC to ''propose a different solution that is as effective as, or superior to, the Commission's proposed approach in addressing the Commission's technical and other concerns so as to ensure that all necessary facilities are included within the scope of the definition.'' [12] The Commission directed NERC to file the revised definition of bulk electric system and its process to exempt facilities from inclusion in the bulk electric system within one year of the effective date of the final rule.[13]

9. In Order No. 743–A, the Commission reaffirmed its determinations in Order No. 743. In addition, the Commission clarified that the issue the Commission directed NERC to rectify was the discretion the Regional Entities have under the current definition to define the bulk electric system in their regions without any oversight from the Commission or NERC.[14] The Commission also clarified that the 100 kV threshold was a ''first step or proxy'' for determining which facilities should be included in the bulk electric system.[15]

10. The Commission further clarified that the statement in Order No. 743, ''determining where the line between 'transmission' and 'local distribution' lies * * * should be part of the exemption process the ERO develops'' was intended to grant discretion to NERC, as the entity with technical expertise, to develop criteria to determine how to differentiate between local distribution and transmission facilities in an objective, consistent, and transparent manner.[16] The Commission stated that the ''Seven Factor Test'' adopted in Order No. 888 could be relevant and possibly a logical starting point for determining which facilities are local distribution for reliability purposes.[17] However, the Commission left it to NERC to determine if and how the Seven Factor Test should be considered in differentiating between local distribution and transmission facilities for purposes of determining whether a facility should be classified as part of the bulk electric system.[18] Order No. 743–A re-emphasized that local distribution facilities are excluded from the definition of Bulk-Power System and, therefore, must be excluded from the definition of bulk electric system.[19]

D. NERC Petitions

11. On January 25, 2012, NERC submitted two petitions pursuant to the directives in Order No. 743: (1) NERC's proposed revision to the definition of ''bulk electric system'' which includes provisions to include and exclude facilities from the ''core'' definition; and (2) revisions to NERC's Rules of Procedure to add a procedure creating an exception process to classify or de-classify an element as part of the ''bulk electric system.''

1. Revised Definition of Bulk Electric System

12. In Docket No. RM12–6–000, NERC filed a petition requesting Commission approval of a revised definition of ''bulk electric system'' in the NERC Glossary (NERC BES Petition). The definition consists of a ''core'' definition and a list of facilities configurations that will be included or excluded from the ''core'' definition. NERC proposed the following ''core'' definition of bulk electric system:

> Unless modified by the [inclusion and exclusion] lists shown below, all Transmission Elements operated at 100 kV or higher and Real Power and Reactive Power resources connected at 100 kV or higher. This does not include facilities used in the local distribution of electric energy.

NERC also requested approval of the proposed ''Detailed Information to Support an Exception Request'' form as satisfying the requirement in Order No. 743 that NERC develop ''technical criteria'' to address exception requests. Finally, NERC requested Commission approval of its plan for implementation of the revised definition of ''bulk electric system.''

a. Inclusions and Exclusions to the Definition of Bulk Electric System

13. As part of the revised definition, NERC developed inclusions and exclusions to eliminate discretion in application of the revised ''bulk electric system'' definition. The inclusions address five specific facilities configurations to provide clarity that the facilities described in these configurations are included in the bulk electric system.

> Inclusions:
> I1—Transformers with the primary terminal and at least one secondary terminal operated at 100 kV or higher unless excluded under Exclusion E1 or E3.
> I2—Generating resource(s) with gross individual nameplate rating greater than 20 MVA or gross plant/facility aggregate nameplate rating greater than 75 MVA including the generator terminals through the high-side of the step-up transformer(s) connected at a voltage of 100 kV or above.
> I3—Blackstart Resources identified in the Transmission Operator's restoration plan.
> I4—Dispersed power producing resources with aggregate capacity greater than 75 MVA (gross aggregate nameplate rating) utilizing a system designed primarily for aggregating capacity, connected at a common point at a voltage of 100 kV or above.
> I5—Static or dynamic devices (excluding generators) dedicated to supplying or absorbing Reactive Power that are connected at 100 kV or higher, or through a dedicated

[9] *Id.* P 75; *see also* Order No. 693–A, 120 FERC ¶ 61,053 at P 19 (''the Commission will continue to rely on NERC's definition of bulk electric system, with the appropriate regional differences, and the registration process until the Commission determines in future proceedings the extent of the Bulk-Power System'').

[10] Order No. 693, FERC Stats. & Regs. ¶ 31,242 at P 77.

[11] Order No. 743, 133 FERC ¶ 61,150 at P 16.

[12] *Id.*

[13] *Id.* P 113.

[14] Order No. 743–A, 134 FERC ¶ 61,210 at P 11.

[15] *Id.* PP 40, 67, 102–103.

[16] *Id.* P 68. *See Promoting Wholesale Competition Through Open Access Non-Discriminatory Transmission Services by Public Utilities; Recovery of Stranded Costs by Public Utilities and Transmitting Utilities,* Order No. 888, FERC Stats. & Regs. ¶ 31,036 at 31,783–84 (1996), *order on reh'g,* Order No. 888–A, FERC Stats. & Regs. ¶ 31,048, *order on reh'g,* Order No. 888–B, 81 FERC ¶ 61,248 (1997), *order on reh'g,* Order No. 888–C, 82 FERC ¶ 61,046 (1998), *aff'd in relevant part sub nom. Transmission Access Policy Study Group* v. *FERC,* 225 F.3d 667 (D.C. Cir. 2000), *aff'd sub nom. New York* v. *FERC,* 535 U.S. 1 (2002).

[17] Order No. 743–A, 134 FERC ¶ 61,210 at P 69.

[18] *Id.* P 70.

[19] *Id.* PP 25, 58.

transformer with a high-side voltage of 100 kV or higher, or through a transformer that is designated in Inclusion I1.

14. NERC also explained that the facilities described in inclusions I1, I2, I4, and I5 are each operated or connected at or above 100 kV. According to NERC, inclusion I3 encompasses blackstart resources identified in a transmission operator's restoration plan, which are necessary for the operation of the interconnection transmission system and should be included in the bulk electric system regardless of their size (MVA) or the voltage at which they are connected. NERC stated that the inclusions will further reduce the potential for the exercise of discretion and subjectivity to exclude such configurations from the bulk electric system.

15. NERC explained that inclusion I1 includes transformers with the primary terminal and at least one secondary terminal operated at 100 kV or higher unless excluded under exclusion E1 or E3. NERC stated that transformers operating at 100 kV or higher are part of the existing definition, but since transformers have windings operating at different voltages, and multiple windings in some circumstances, clarification was required to explicitly identify which transformers are included in the bulk electric system.

16. According to NERC, inclusion I2 includes in the bulk electric system the generator terminals through the high-side of the step-up transformers connected at a voltage of 100 kV or above. NERC states that this inclusion mirrors the text of the NERC Registry Criteria (Appendix 5B of the NERC Rules of Procedure) for generating units.[20]

17. As noted above, inclusion I3 includes blackstart resources identified in the transmission operator's restoration plan in the bulk electric system. NERC added inclusion I4 to accommodate the effects of variable generation on the bulk electric system and inclusion I5 to address static or dynamic devices dedicated to supplying or absorbing reactive power that are connected at 100 kV or higher.

18. NERC's modified definition of bulk electric system also provides four exclusions regarding facilities configurations that are not included in the bulk electric system. Generally, the exclusions address radial systems, behind-the-meter generation and local networks that distribute power to load:

Exclusions:

E1—Radial systems: A group of contiguous transmission Elements that emanates from a single point of connection of 100 kV or higher and:

(a) Only serves Load. Or,

(b) Only includes generation resources, not identified in Inclusion I3, with an aggregate capacity less than or equal to 75 MVA (gross nameplate rating). Or,

(c) Where the radial system serves Load and includes generation resources, not identified in Inclusion I3, with an aggregate capacity of non-retail generation less than or equal to 75 MVA (gross nameplate rating).

Note—A normally open switching device between radial systems, as depicted on prints or one-line diagrams for example, does not affect this exclusion.

E2—A generating unit or multiple generating units on the customer's side of the retail meter that serve all or part of the retail Load with electric energy if: (i) The net capacity provided to the BES does not exceed 75 MVA; and (ii) standby, back-up, and maintenance power services are provided to the generating unit or multiple generating units or to the retail Load by a Balancing Authority, or provided pursuant to a binding obligation with a Generator Owner or Generator Operator, or under terms approved by the applicable regulatory authority.

E3—Local networks (LN): A group of contiguous transmission Elements operated at or above 100 kV but less than 300 kV that distribute power to Load rather than transfer bulk-power across the interconnected system. LN's emanate from multiple points of connection at 100 kV or higher to improve the level of service to retail customer Load and not to accommodate bulk-power transfer across the interconnected system. The LN is characterized by all of the following:

(a) Limits on connected generation: The LN and its underlying Elements do not include generation resources identified in Inclusion I3 and do not have an aggregate capacity of non-retail generation greater than 75 MVA (gross nameplate rating);

(b) Power flows only into the LN and the LN does not transfer energy originating outside the LN for delivery through the LN; and

(c) Not part of a Flowgate or transfer path: The LN does not contain a monitored Facility of a permanent Flowgate in the Eastern Interconnection, a major transfer path within the Western Interconnection, or a comparable monitored Facility in the ERCOT or Quebec Interconnections, and is not a monitored Facility included in an Interconnection Reliability Operating Limit (IROL).

E4—Reactive Power devices owned and operated by the retail customer solely for its own use.

Note—Elements may be included or excluded on a case-by-case basis through the Rules of Procedure exception process.

19. NERC explained that exclusion E1 is intended to enhance the clarity of the radial facilities exclusion and that criteria ''b'' and ''c'' of exclusion E1 identify the maximum amount of generation allowed on the radial facility while still qualifying for the radial facilities exclusion. NERC added the ''normally open switch'' note at the end of exclusion E1 to address a common network configuration in which two separate sets of facilities would be recognized as radial systems and not included in the bulk electric system are connected by a ''normally open switch'' which is a switch is set to the open position for reliability purposes.[21]

20. NERC explained that the normally open switch note avoids numerous exception requests because this configuration is common and subjecting two sets of radial facilities that are normally unconnected to each other because the switch between them is open to the Reliability Standards during the limited time periods when the switch is closed for maintenance-related or outage-related circumstances is impractical and unworkable.

21. According to NERC, exclusion E2 excludes a generating unit or units on the customer's side of the retail meter that serves all or part of the retail load subject to allowing a limited amount of generating capacity to be connected and that standby, back-up, and maintenance power services are provided to the generating unit. NERC stated that these generating units are not necessary for the operation of the interconnected transmission network because they serve a single retail load, provide a limited amount of capacity to the bulk electric system, and are fully backed up by other resources.

22. With respect to the ''local network'' exclusion (exclusion E3), NERC explained that it encompasses local networks of transmission elements operated at between 100 kV and 300 kV that distribute power to load rather than transfer bulk power across the interconnected system. NERC further explained that local networks are not intended to provide transfer capacity for the interconnected transmission network and such networks should not be included in the bulk electric system, and the conditions established in exclusion E3 are sufficient to ensure that such local networks are being used exclusively for local distribution purposes. NERC adds that facilities used for the local distribution of electric energy are expressly excluded from the bulk electric system by the core definition as well as by the local network exclusion.[22]

[20] *See* section III.c.1 and III.c.2 of Appendix 5B of the NERC Rules of Procedure.

[21] NOPR, 139 FERC ¶ 61,247 at P 27 (citing NERC BES Petition at 19).

[22] *See* NOPR, 139 FERC ¶ 61,247 at P 30; *See also* NERC BES Petition at 22–23.

b. Detailed Information To Support an Exception Request

23. In response to the Order No. 743 directive to develop technical criteria to use in addressing requests for exceptions to the definition of the bulk electric system, NERC developed an alternative approach because it would be more feasible to develop a common set of data and information that Regional Entities and NERC could use to evaluate exception requests rather than to develop the detailed criteria.[23] The Detailed Information Form contains a common set of data that entities seeking an exception must submit with every exception request. According to NERC, the information that an applicant may submit in support of an exception request is not limited to the Detailed Information Form. Rather, an applicant is expected to submit all relevant data, studies and other information that support the exception request, and the Regional Entity and NERC may ask an applicant to provide other data and studies in addition to the Detailed Information Form.

c. Implementation Plan for Revised Definition of ''Bulk Electric System''

24. NERC requested that the revised definition become effective on the first day of the second calendar quarter after receiving applicable regulatory approval, or, in those jurisdictions where no regulatory approval is required, on the first day of the second calendar quarter after its adoption by the NERC Board of Trustees. NERC stated that the proposed effective date is appropriate to provide a reasonable time between the date of regulatory approval, which is not under the control of NERC or the industry, and the effective date of the revised definition of bulk electric system.

25. NERC also requested that compliance obligations for all newly-identified elements to be included in the bulk electric system should begin twenty-four months after the applicable effective date of the revised definition. While the Commission stated in Order Nos. 743 and 743–A that the transition period should not exceed 18 months, NERC explained that it is requesting a longer transition period in light of the actions that entities will need to complete in connection with the revised definition.

2. NERC Petition for Approval of Revisions To Rules of Procedure To Adopt an Exception Process

26. In Docket No. RM12–7–000, NERC filed proposed revisions to its Rules of Procedure for the purpose of adopting an ''exception process'' mechanism to add elements to, and remove elements from, the bulk electric system. NERC stated that decisions to approve or disapprove exception requests will be made by NERC, rather than by the Regional Entities, thereby eliminating the potential for inconsistency and subjectivity. Further NERC explained that the exception process is ''not intended to be used to resolve ambiguous situations,'' i.e., the exception process is only available after an initial determination has been made regarding whether an element is part of or not part of the bulk electric system through the application of the definition to the element.''[24]

27. NERC stated that an owner of an element may submit a request to the applicable Regional Entity to include the element in, or remove it from, the bulk electric system.[25] In addition, a Regional Entity, planning authority, reliability coordinator, transmission operator, transmission planner, or balancing authority that has the elements covered by an exception request within its scope of responsibility may submit an exception request for the inclusion of an element or elements owned by a registered entity. Upon receiving an exception request, the applicable Regional Entity will review the exception request and will issue a recommendation to NERC. NERC will evaluate the Regional Entity recommendation, the accompanying technical documents, the Technical Review Panel opinion (if any), and any comments submitted, and will issue a final determination. Finally, NERC stated that an exception request will be subject to review to verify continuing justification for the exception. NERC also stated that an entity must certify every 36 months to the appropriate Regional Entity that the basis for the exception request remains valid. Further, NERC also included a method for an entity to challenge the NERC decision on an exception request to a NERC Compliance Committee. The entity may also appeal the final NERC decision to the Commission within 30 days following the date of the Compliance Committee's decision, or within such time period as the Commission's legal authority permits.

28. In response to the Order No. 743 Commission statement that NERC should maintain a list of exempted facilities that can be made available to the Commission upon request, NERC maintained that the proposed exception process does not include provisions for such a list, adding that this is an internal administrative matter for NERC to implement that does not need to be embedded in the Rules of Procedure.[26] NERC stated it will develop a specific internal plan and procedures for maintaining a list of facilities for which exceptions have been granted.

E. Commission NOPR

29. The Commission issued the NOPR on June 22, 2012, and required that comments be filed within 60 days after publication in the **Federal Register**, or September 4, 2012. While seeking comment on various provisions of NERC's petitions, the NOPR proposed to approve NERC's modification to the currently-effective definition of bulk electric system and changes to the Rules of Procedure to add the exception process. The NOPR also requested comment on the appropriate role for NERC and the Commission in the identification of bulk electric system facilities and elements.

30. The Commission received more than sixty comments on the proposed rulemaking. NERC and other commenters, *inter alia,* respond to the Commissions questions regarding the application of the proposed bulk electric system definition. These comments have assisted us in developing this Final Rule. A list of commenters appears in Appendix A to this Final Rule.[27]

II. Discussion

31. For the reasons discussed below, the Commission adopts the NOPR proposal and approves NERC's revised definition of bulk electric system and the specific inclusions and exclusions set forth in the definition, as just, reasonable, not unduly discriminatory or preferential, and in the public interest. Likewise, the Commission approves NERC's revised Rules of Procedure that set forth an exceptions process for determining whether elements and facilities are included in the bulk electric system on a case-by-case basis. While we discuss below specific provisions of the NERC proposal, provisions of the modified bulk electric system definition and related Rules of Procedures not specifically mentioned are approved in

[23] NERC BES Petition at 26.

[24] NOPR, 139 FERC ¶ 61,247 at P 38, *quoting* NERC ROP Petition at 10–11.

[25] *See* NOPR, 139 FERC ¶ 61,247 at PP 39–45, detailing the three-step exception process.

[26] NERC ROP Petition at 49.

[27] Further, NERC, MISO, Consumers, MISO Transmission Owners, Barrick, ITC Companies, and AMP filed reply comments. Although the NOPR did not allow for reply comments, we will accept these pleadings because they have assisted our understanding of NERC's proposal in this Final Rule.

this Final Rule. Below, we address the following matters: (A) Approval of the NERC definition; (B) issues concerning the ''core'' bulk electric system definition; (C) local distribution; (D) exclusions and inclusions in the bulk electric system definition; and (E) NERC's Rules of Procedures exceptions process.

A. Approval of the Revised Bulk Electric System Definition NOPR Proposal

32. In the NOPR, the Commission proposed to approve a modification to the currently-effective definition of ''bulk electric system'' because it removes language allowing for regional discretion in the currently-effective bulk electric system definition, establishes a bright-line threshold that includes all facilities operated at or above 100 kV and identifies specific categories of facilities and configurations as inclusions and exclusions to provide clarity in the definition of bulk electric system.[28]

Comments

33. NERC, Regional Entities, trade organizations and a majority of commenters from various industry segments support the Commission's proposal to approve NERC's proposals. APPA ''strongly support[s]'' NERC's proposed definition.[29] EEI supports NERC's proposals and states that any changes to the definition should be made through the standard development process, not through directives. LPPC, NRECA, and WPPC also support approval of the definition and urge the Commission to adopt the NERC proposal and to refrain from pursuing additional regulatory mandates. Snohomish and WPPC agree that NERC has developed a ''clear and workable definition'' of the bulk electric system that markedly improves the existing definition. They also opine that the definition creates a foundation for reliability that focuses on core elements of the interconnected bulk transmission system, and provides a means for lower-voltage or peripheral elements of the electric system to be excluded from the bulk electric system. Other commenters state that the definition is consistent, repeatable and verifiable and will provide clarity that will assist NERC and affected entities in implementing Reliability Standards.

34. Other commenters, while noting that the NOPR represents a ''positive development,'' believe additional modifications are necessary ''to achieve consistency within the limitations'' of section 215 of the FPA and the Commission's directives in Order Nos. 743 and 743–A.[30]

35. Some commenters oppose approval on various grounds. For example, NARUC is concerned that, even though the definition appears to honor the exclusion of local distribution from the bulk electric system, the definition does not go far enough to ensure ''that a costly analysis * * * is not required to be performed with regard to local distribution elements that are by law excluded.'' [31] NARUC is also concerned that exclusion E3 (local networks) will exclude some, but not all, local distribution elements. According to NARUC, this could cause confusion as to the status of local distribution elements that are not also described in exclusion E3. Consequently, NARUC believes that the definition does not appropriately reflect the statutory limits of the Commission's authority under FPA section 215 and its implementation could unnecessarily overreach into state jurisdictional local distribution facilities.

36. NYPSC believes that the proposed definition will likely result in classifying certain facilities as part of the bulk electric system despite their being unnecessary for operating an interconnected transmission network. NYPSC states that the majority of the 138 kV lines within New York City serve as direct feeders to the networked distribution system serving load. NYPSC also states that there is no technical justification for a 100 kV bright-line definition.[32] NYPSC contends that, even with the exclusions and the exception process, it is uncertain whether an exclusion or exception would apply to the 138 kV lines noted above. NYPSC believes that this approach presumes the Commission has jurisdiction over all facilities operated at 100 kV or above, unless proven otherwise, which inappropriately shifts the legal and technical burdens to the states.

37. NYPSC, NARUC, and the Massachusetts DPU argue that the revised definition does not include a cost impact analysis that weighs costs related to the modified definition against the reliability benefits that the new definition would achieve. They contend that the lack of a cost-benefit analysis accompanying the revised definition represents an additional gap in the process for developing this Reliability Standard. NYPSC and the Massachusetts DPU contend that the costs of compliance with the definition will be excessive. NYPSC states that, according to NERC and the Northeast Power Coordinating Council, Inc. (NPCC), it would exceed $280 million. Thus, they advocate that, given the significant costs that the revised definition could impose on consumers, the Commission should reject NERC's proposed modifications until they are supported by a cost-benefit analysis.

Commission Determination

38. Pursuant to section 215(d)(2) of the FPA, we approve NERC's revised definition of bulk electric system and the specific inclusions and exclusions set forth in the definition, as just, reasonable, not unduly discriminatory or preferential, and in the public interest. NERC's proposal provides additional clarity and granularity that will allow for greater transparency and consistency in the identification of elements and facilities that make up the bulk electric system and is responsive to the technical and policy concerns discussed in Order No. 743.

39. NERC's proposal adequately ensures that all facilities necessary for operating an interconnected electric energy transmission network are included under the bulk electric system. As we observed in Order No. 743,

> ''[U]niform Reliability Standards, and uniform implementation, should be the goal and the practice, the rule rather than the exception, absent a showing that a regional variation is superior or necessary due to regional differences. Consistency is important as it sets a common bar for transmission planning, operation, and maintenance necessary to achieve reliable operation * * * . [W]e have found several reliability issues with allowing Regional Entities broad discretion without ERO or Commission oversight.[33]

The core definition eliminates the provision that allows broad regional discretion, and establishes a 100 kV bright-line threshold for determining, in the first instance, those elements and facilities that are included in the bulk electric system. The definition also includes specific inclusions and exclusions that address typical system facilities and configurations such as generation and radial systems, providing additional granularity that improves consistency and provides a practical means to determine the status of common system configurations. Thus, we agree with commenters that the modified definition is consistent, repeatable and verifiable and will provide clarity that will assist NERC

[28] NOPR, 139 FERC ¶ 61,247 at P 18.

[29] APPA Comments at 7.

[30] Holland Comments at 2.

[31] NARUC Comments at 4.

[32] NYPSC Comments at 3. *See also* Massachusetts DPU Comments at 6–7.

[33] Order No. 743, 133 FERC ¶ 61,150 at P 82 (footnote omitted).

and affected entities in implementing Reliability Standards.

40. Accordingly, the Commission finds that NERC's proposal satisfies the directives of Order No. 743 to develop modifications to the currently-effective definition of bulk electric system to ensure that the definition encompasses all facilities necessary for operating an interconnected transmission network and remove the Regional Entity discretion that currently allows for regional variations without review or oversight. We also find that NERC's definition satisfies the Commission's technical concerns in Order No. 743 through the use of a bright-line 100 kV threshold, with specific inclusions and exclusions within the definition, for identifying bulk electric system elements and the establishment of an exception process for facilities that are not necessary for operating the interconnected transmission network.

41. Moreover, we are not persuaded by the rationale of the commenters who advocate that we remand the NERC proposal. We disagree with NYPSC that the proposed definition will likely result in classifying certain facilities as part of the bulk electric system despite their being unnecessary for operating an interconnected transmission network. An entity that believes its facility is improperly classified as part of the bulk electric system by application of the definition may avail itself of the exception process to have the facility removed from inclusion in the definition. With regard to NYPSC's claim that there is no technical justification for the 100 kV threshold, in Order No. 743, the Commission found ''that many facilities operated at 100 kV and above have a significant effect on the overall functioning of the grid and that the majority of 100 kV and above facilities in the United States operate in parallel with other high voltage and extra high voltage facilities, interconnect significant amounts of generation sources and operate as part of a defined flowgate.'' The Commission explained that this ''illustrates their parallel nature and therefore their necessity to the reliable operation of the interconnected transmission system'' and that ''[p]arallel facilities operated at 100–200 kV will experience similar loading as higher voltage parallel facilities at any given time and the lower voltage facilities will be relied upon during contingency scenarios.'' [34] In addition, in Order No. 743 the Commission identified the reliability concerns created by the current definition and a method to ensure that certain facilities needed for the reliable operation of the nation's bulk electric system are subject to mandatory and enforceable Reliability Standards. The Commission noted that the material impact assessments implemented, for example, by NPCC ''are subjective in nature, and results from such tests are inconsistent in application, as shown through the exclusion of facilities that clearly are needed for reliable operation.'' [35] The Commission also found that the vast majority of 100 kV and above facilities are part of parallel networks with high voltage and extra high voltage facilities and are necessary for reliable operation.[36] Thus, the Commission found that NERC should ''establish a uniform definition that eliminates subjectivity and regional variation in order to ensure reliable operation of the bulk electric system'' and that ''the existing NPCC impact test is not a consistent, repeatable, and comprehensive alternative to the bright-line, 100kV definition we prefer.'' [37]

42. NERC already applies a general 100 kV threshold, and today all regions, with the exception of NPCC, also apply a 100 kV threshold. We also note NYPSC cites to the same methodology that the Commission found dubious in Order No. 743–A where the Commission explained that it had:

> serious concerns about NPCC's [] methodology. The Commission stated that, as a threshold matter, the material impact tests proffered by commenters did not measure whether specific system elements were necessary for operating the system, but, rather, measure the impact of losing the element. The Commission's extensive discussion of the NPCC test further noted that the NPCC methodology is unduly subjective, and results in an inconsistent process that excludes facilities necessary for operating the bulk electric system from the definition.[38]

43. We also disagree with NYPSC's contention that this approach presumes the Commission has jurisdiction over all facilities operated at 100 kV or above, unless proven otherwise, which inappropriately shifts the legal and technical burdens to the states. As noted above and in Order No. 743–A, the suggested solution of a 100 kV threshold paired with an exemption process, in essence, ''merely clarifies the current NERC definition, which classifies facilities operating at 100 kV or above as part of the bulk electric system.'' [39] Thus, we are not persuaded that NERC's proposal inappropriately shifts legal or technical burdens. In addition, the Commission has maintained that the bright-line threshold would be a ''first step or proxy'' in determining which facilities should be included in the bulk electric system. The definition, coupled with the exception process will ensure that facilities not necessary for the operation of the interconnected transmission network will be properly categorized. Further, the Commission's approach for determining whether elements are used for local distribution on a case-by-case basis, as discussed more fully below, addresses NARUC's concerns as to the status of local distribution elements that are not also described in exclusion E3 and that the definition does not appropriately reflect the statutory limits of the Commission's authority under FPA section 215 as well as NYPSC's concern about the Commission having jurisdiction over all facilities operated at 100 kV or above. With regard to the specific examples cited by NYPSC, we find that such determinations are more appropriate for the exception process and beyond the scope of this proceeding.

44. We also disagree with NYPSC and Massachusetts DPU that NERC's proposal is flawed because NERC's petition did not include a formal cost analysis. Order No. 743 did not require such an analysis. Rather, Order No. 743 tasked NERC with certain directives and NERC's petitions are intended to comply with those directives. In addition, while cost of implementation can be relevant in Commission review of a proposed Reliability Standard, the foremost concern is the reliability of the interconnected transmission network.[40] Therefore, we find that NERC's petition adequately addresses the Commission's Order No. 743 directives.

B. The Core Definition of Bulk Electric System

NOPR Proposal

45. In the NOPR, the Commission proposed to approve the bulk electric system ''core'' definition developed by NERC which states as follows:

> Unless modified by the lists shown below, all Transmission Elements operated at 100 kV or higher and Real Power and Reactive Power resources connected at 100 kV or higher. This does not include facilities used in the local distribution of electric energy.

In the NOPR, the Commission noted that NERC's proposal appears to satisfy the objectives set forth in Order No. 743.

[34] Order No. 743, 133 FERC ¶ 61,150 at P 73.

[35] Order No. 743, 133 FERC ¶ 61,150 at P 96.

[36] *Id.*

[37] *Id.*

[38] Order No. 743–A, 134 FERC ¶ 61,210 at P 47 (footnotes omitted) (citing Order No. 743, 133 FERC ¶ 61,150 at PP 74, 76 and 85).

[39] Order No. 743–A, 134 FERC ¶ 61,210 at P 36.

[40] *See* Order No. 672, FERC Stats. & Regs. ¶ 31,204 at P 330.

The Commission also stated that NERC's ''core'' definition establishes the fundamental threshold for inclusion of facilities in the bulk electric system as those that are operated at 100 kV or higher, if they are transmission elements, or are connected at 100 kV or higher, if they are real power or reactive power resources. In addition, the Commission stated that the core definition also establishes a 100 kV criterion as a bright-line threshold, rather than as a general guideline as in the current definition, i.e., the phrase ''generally operated at'' in the current definition is eliminated.

Comments

46. NERC and a majority of commenters including most trade organizations believe that the core definition satisfies the Order No. 743 directives. By eliminating the language ''as defined by the Regional Reliability Organization'' and ''generally operated at,'' they state that the revised definition eliminates the subjectivity and regional variations that are possible under the current definition.[41] WPPC supports the NERC proposals but is concerned that the NOPR could be read as attempting to impose nationally uniform standards without allowing regional variation. WPPC believes that FPA section 215 requires deference to Regional Entities in developing Reliability Standards and is concerned that the NOPR's references to uniformity of the definition of bulk electric system must be limited by the deference accorded to Regional Entities in the statute.

47. Other commenters seek modification of the core definition. For example, PSEG Companies believe that the core definition will introduce subjectivity because it omits facilities and systems necessary to operate the facilities above 100 kV, such as protection systems, underfrequency load shedding systems and control centers.[42] PSEG Companies suggest the addition of demand response above 75 MW within a balancing authority into the definition. In the same vein, ISO New England suggests including capacity resources connected below 100 kV and identifies protection systems, under-frequency and under-voltage load shedding systems, inclusion of non-bulk electric system facilities into transmission and operational planning, and control rooms as items that are important to operating the bulk electric system but not in the definition. ISO New England, therefore, believes that NERC should make the determination whether or not these facilities and control systems must comply with Reliability Standards independent of their designation. Valero seeks clarification that the core definition excludes elements ''that are owned and used by an industrial end-user to serve its load.''[43]

48. Similarly, IUU and Barrick state that industrial generators are intrastate facilities that serve only the owner's load and believe that they are excluded from the jurisdiction of the Commission.[44] IUU and Barrick believe that some of the Reliability Standards appear to reach beyond the limits imposed by Congress and into these intrastate industrial generator facilities. According to IUU and Barrick, the definition needs an additional exclusion that excludes these intrastate facilities.

49. Several commenters that support the NERC proposal also comment on matters not specifically raised in the NOPR. APPA recommends that the Commission state that it expects NERC will continue to treat the Phase 2 bulk electric system definition project as a priority in the 2013 budget year. APPA also requests that the Commission direct NERC to expedite the deregistration process for those entities or facilities that are no longer designated as part of the bulk electric system under the new definition or through application of the Rules of Procedure exception process. APPA believes that an expedited deregistration process would reduce the associated burden on entities that are no longer required to document compliance due to the revisions in the bulk electric system definition and the exception process.

50. Redding requests that, due to the connection between the definition and the NERC Functional Model, the Commission should direct revisions to the NERC Functional Model to accommodate entities that own or operate facilities that technically qualify as transmission but that have a limited, if any, impact on reliability.

Commission Determination

51. We find that the ''core'' definition satisfies the Order No. 743 directives to remove the subjectivity and regional variations that are possible under the current definition by eliminating the language ''as defined by the Regional Reliability Organization'' and ''generally operated at,'' in the revised definition. The ''core'' definition, quoted above, establishes the fundamental threshold for inclusion of facilities in the bulk electric system as those that are operated at 100 kV or higher, if they are transmission elements, or are connected at 100 kV or higher, if they are real power or reactive power resources. The core definition also establishes a 100 kV criterion as a bright-line threshold, rather than as a general guideline as in the current definition, i.e., the phrase ''generally operated at'' in the current definition is eliminated. The core definition also continues to capture equipment associated with the facilities included in the bulk electric system.

52. Other than the directive to modify exclusion E3 as discussed below, the Commission declines to direct NERC to further modify the definition or the specified inclusions and exclusions. Specifically, we will not direct further revisions to address demand response, protection systems and other facilities or equipment as separate inclusions or exclusions as advocated by ISO New England, PSEG Companies, IUU or Barrick.[45] Rather, NERC has indicated that it has initiated a Phase 2 of the development project for the definition of bulk electric system, and interested stakeholders have the opportunity in the first instance to raise their ideas in that forum regarding possible additions, inclusions and exclusion set forth in the bulk electric system definition.[46]

53. Moreover, in the NOPR we acknowledged NERC's statement that the core definition also continues to capture equipment associated with the facilities included in the bulk electric system.[47] In the NOPR we agreed with NERC that while the new definition does not use the term ''associated equipment,'' the phrase is included in the definition through the defined term ''Transmission Elements.''[48] We adopt the NOPR proposal that the term ''associated equipment,'' is included in the definition through the defined term ''Transmission Elements'' which could

[41] *See e.g.,* NERC, APPA, EEI, NRECA, ELCON, the Regional Entities, NV Energy, National Grid, Southern Companies, Duke Energy, International Transmission Company, TAPS, BPA, Hydro One and IESO, and Snohomish.

[42] PSEG Comments at 4–6.

[43] Valero Comments at 3.

[44] *See also* Barrick Reply Comments at 2–3.

[45] We note that, in Order No. 693, the Commission recognized demand side management as a type of resource for contingency reserve that should be treated on a comparable basis with other resources; and must meet similar technical requirements as other resources providing this service. Order No. 693, FERC Stats. & Regs. ¶ 31,242 at PP 330–335.

[46] According to NERC, due to time constraints in meeting the compliance deadline set in Order No. 743, NERC separated the development of the revised definition into two phases. *See* NERC Petition at 46. NERC stated that Phase 1 culminated in the language of the proposed modified definition that is the primary subject of this Final Rule. Phase 2, which is ongoing, intends to focus on other industry concerns raised during Phase 1.

[47] NOPR, 139 FERC ¶ 61,247 at PP 16, 55.

[48] NOPR, 139 FERC ¶ 61,247 at P 55 n.69.

include the facilities identified by PSEG Companies.

54. With regard to Valero's clarification, that the core definition excludes elements ''that are owned and used by an industrial end-user to serve its load,'' Valero can either seek to have this matter addressed generically, if appropriate, in NERC's Phase 2, or seek to have this addressed on a case-by-case basis in the exception process that we approve in this Final Rule.

55. We decline, as APPA requests, to direct NERC to expedite the deregistration process for those entities who own or operate facilities that are no longer designated as part of the bulk electric system. We do not expect there to be significant numbers of entities either needing to register or deregister due to the change in definition.[49] To the extent entities seek to deregister, NERC, as the ERO, can determine the appropriate timeframe for making such a determination. We also decline to order NERC to modify the Functional Model as Redding requests as the issues Redding raises are outside the scope of this proceeding. In response to WPPC's concern, this Final Rule adopts the revised definition which eliminates regional discretion for determining whether an element is part of the bulk electric system. It does not address or subsume the ability of Regional Entities to develop Reliability Standards for their regions that meet criteria for regional Reliability Standards.

56. In summary, the Commission finds that NERC's proposal adequately addresses the concerns articulated in Order No. 743 regarding regional discretion and the need for a consistent approach and satisfies the concerns regarding the elimination of inconsistencies across regions.

C. Local Distribution

NOPR Proposal

57. The NOPR noted that, although Order No. 743 acknowledged that ''Congress has specifically exempted 'facilities used in the local distribution of electric energy' '' it still is necessary to determine which facilities are local distribution, and which are transmission.[50] The NOPR observed that Order No. 743–A stated that ''[w]hether facilities are used in local distribution will in certain instances raise a question of fact, which the Commission has jurisdiction to determine.'' [51] In addressing what constitutes local distribution, NERC stated in its petition that facilities used for the local distribution of electric energy are expressly excluded from the bulk electric system by the core definition as well as by the local network exclusion, exclusion E3.[52] In the NOPR, the Commission requested comment regarding how NERC's proposed definition is responsive to the Commission's directives in Order Nos. 743 and 743–A. Specifically, the Commission requested comment on how NERC's proposal adequately differentiates between local distribution and transmission facilities in an objective, consistent, and transparent manner.

Comments

58. NERC and numerous commenters state that the definition adequately differentiates between local distribution and transmission.[53] NERC states that the revised definition distinguishes between bulk electric system facilities and non-bulk electric system facilities and local distribution facilities fall into the latter category.[54] NERC adds that, by applying the definition, facilities used for local distribution will not be included due to their specific exclusion in the core definition. NERC and others also state that the exception process can be used to determine whether facilities are used for local distribution when an entity believes such facilities have been improperly included.[55]

59. While ELCON generally agrees with NERC's position, ELCON comments that NERC's proposal does not fully respond to the Commission's directive in Order Nos. 743 and 743–A. ELCON maintains that a definition of ''local distribution'' is necessary to avoid including assets that are clearly used for the local distribution as part of the bulk electric system. ELCON expresses concern that industrial consumers' equipment that is rated 100 kV or above will be designated as a component of the bulk electric system, irrespective of whether such elements are material for the reliable operation of the interconnected Bulk-Power System. ELCON recommends that the Commission address this issue by establishing a joint working group with NARUC to draft a proposed definition of local distribution to exclude certain facilities from the scope of the definition of bulk electric system.

60. Some entities that generally agree with NERC also suggest clarifications to improve the distinction between local distribution and transmission. MISO suggests that, to identify local distribution facilities, the Commission direct NERC to clarify the last sentence of the core definition by ''cross-referencing'' the exclusion criteria in the definition.[56] Snohomish requests that the Commission clarify that the Seven Factor Test established in Order No. 888 is one element that can be used to evaluate an exception request in addition to other engineering and technical considerations.[57]

61. Other commenters contend that NERC's proposal does not adequately differentiate between local distribution and transmission facilities or reflect the statutory limits of the Commission's authority under FPA section 215.[58] As noted above, NARUC states that the NERC definition does not appropriately reflect the statutory limits of the Commission's authority under Federal Power Act Section 215 and its implementation could unnecessarily overreach into state jurisdictional local distribution facilities. NARUC maintains that, while the definition of bulk electric system appears to exclude local distribution by restating the law, the definition does not go far enough to ensure that a costly analysis applying for an ''exception'' is not required to be performed with regard to local distribution elements that are by law ''excluded.'' NARUC contends that the mere fact that a subset of local distribution elements expressly excluded from the bulk electric system by the core definition are specifically identified in exclusion E3 could cause confusion as to the status of local distribution elements that are not also described in E3. Similarly, the Steel Manufacturers Association states that the Commission cannot allow NERC's exception process to determine the boundaries of the Commission's jurisdiction.

62. Consumers Energy believes that the definition does not differentiate between transmission and local distribution because ''Transmission Elements'' and ''local distribution'' are undefined. Consumers Energy states that the Commission should clarify that any facilities that have been found by the Commission to be local distribution pursuant to the Seven Factor Test are

[49] *See* NOPR, 139 FERC ¶ 61,247 at P 132.

[50] Order No. 743–A, 134 FERC ¶ 61,210 at P. 67.

[51] NOPR, 139 FERC ¶ 61,247 at P. 58, *quoting* Order No. 743–A, 134 FERC ¶ 61,210 at P. 67.

[52] NOPR, 139 FERC ¶ 61,247 at P. 59, (citing NERC BES Petition at 16).

[53] *See e.g.,* APPA Comments at 8–9, EEI Comments at 4, NRECA Comments at 7, Hydro One Comments at 3, NV Energy Comments at 3–4, PHI Companies Comments at 3, TAPS Comments at 3, BPA Comments at 3, WPPC Comments at 27–30.

[54] NERC Comments at 6.

[55] *See e.g.* WPPC Comments at 28.

[56] MISO Comments at 4.

[57] Snohomish Comments at 3.

[58] *E.g.,* NARUC, Holland, NYPSC, and SmartSenseCom.

also local distribution under FPA section 215 and therefore outside the bulk electric system.[59] Consumers references a prior Commission declaratory order accepting the Michigan Public Service Commission's determination of transmission and local distribution facilities.[60] Consumers notes that it sold all of its ''bulk electric system elements'' to Michigan Electric Transmission Company, who is the registered transmission owner. ITC Companies and MISO filed reply comments requesting that the Commission reject the coordination and continuity aspect of Consumers' proposal to automatically exclude from the definition those facilities that are ''in series'' with transmission facilities that are included in the bulk electric system definition.[61] In addition, they state that this is not the proper proceeding to address whether specific facilities may or may not be part of the bulk electric system. Consumers filed a motion to strike the MISO reply comments.

63. Portland is concerned that the Commission is assessing its reliability jurisdiction without addressing ''the inconsistency between its reliability jurisdiction and its traditional 'transmission' jurisdiction under FPA section 201(b).'' Portland states that the Commission could clarify that for entities who apply the local distribution exception in good faith, any future regulatory determination that such distribution facilities are to be treated as part of the bulk electric system within the scope of FPA section 215 regulation will be prospective only.[62]

64. Holland argues that, aside from the exclusions in the core definition, there are no criteria or guidelines that exclude local distribution facilities from the bulk electric system. Holland also argues that if an entity challenges a registration, there is no guidance as to what information NERC will consider whether to recognize the facilities in question as local distribution and exclude them from the bulk electric system. Holland contends that the proposed Rules of Procedure fail to provide any distinction between those facilities that must be excluded because they are local distribution versus those that should be excluded because, although they meet the [bulk electric system] bright-line criteria, they are not necessary for the reliable operation of the interconnected transmission system. Holland claims that the exception process does not make ''any distinction between criteria necessary for determining those facilities that must be excluded because they are local distribution versus those that should be excluded because they [ ] meet the [bulk electric system] criteria, but are not material.''[63] Holland adds that ''because the exclusions are not comprehensive, and because the 'exceptions' process provides no further guidance on the proper exclusion of these facilities, there would be no basis to support a conclusion that the NOPR has effectively and transparently identified, let alone justified, a second class or test for identifying local distribution for purposes of Section 215 of the FPA.''[64] Similarly, Massachusetts DPU comments that exception requests will inevitably involve difficult questions regarding whether a facility is ''used in the local distribution of electric energy,'' an area over which states have exclusive authority under the FPA.[65]

65. Valero requests that the Commission direct NERC to develop criteria based on a ''primary function test'' to exclude facilities used in local distribution. In addition, Valero states that the Commission should ''provide guidance to NERC by [ ] stating that, to constitute distribution, a facility need not be used *exclusively* for distribution purposes.[66] Further, Valero contends that NERC's ''distribution use only'' position contradicts the plain language of sections 201 and 215 of the FPA. Valero states that its ''discrete on-site electrical equipment'' is designed only to serve load at its refineries. While the facilities may enhance the reliability of electric service, Valero asserts they are only used by an industrial end-user of electricity for ''the local distribution of electric energy'' and must be excluded from the bulk electric system. The Power Agencies ask for clarification of footnote 79 in the NOPR and assume that the Commission is clarifying that certain facilities may not satisfy the revised definition, but may constitute transmission facilities for purposes other than applying FPA section 215.[67]

Commission Determination

66. For the reasons discussed below, we find that NERC's ''core'' definition of bulk electric system definition, together with exclusion E3 (local networks), is consistent with the section 215 exclusion of local distribution facilities. We also find that, while NERC's case-by-case exceptions process is appropriate to determine the technical issue of whether facilities are part of the bulk electric system, the jurisdictional question of whether facilities are used in local distribution should be decided by the Commission.

67. NERC's ''core'' definition provides a 100 kV threshold for determining whether elements or facilities are included in the bulk electric system. As we indicated in Order No. 743, the 100 kV threshold is a reasonable ''first step or proxy'' for determining which facilities should be included in the bulk electric system. Indeed, it is reasonable to anticipate that this threshold will remove from the bulk electric system the vast majority of facilities that are used in local distribution, which tend to be operated at lower, sub-100 kV voltages. Moreover, applying the four exclusions in NERC's proposed definition should serve to further exclude facilities used in local distribution from the bulk electric system. In particular, as NERC indicates, exclusion E3 (local networks)—although not synonymous with local distribution—should serve to reasonably exclude many above-100 kV facilities that are used in local distribution. Based on the information provided in NERC's petition, as well as the supporting comments of EEI and others, we anticipate that the ''core'' definition together with exclusion E3 should provide a reasonable means to accurately and consistently determine on a generic basis whether facilities are part of the bulk electric system. In other words, most local distribution facilities will be excluded by the 100 kV threshold or exclusion E3 without needing to seek a Commission jurisdictional determination. Accordingly, we find this aspect of NERC's petition reasonable.

68. In addition to the definition, NERC also submitted revisions to the Rules of Procedure (discussed below in greater detail) that allow for a case-by-case exception process. Included in this process is an opportunity for entities to seek to exclude facilities from the bulk electric system because they are used in local distribution. NERC's petition does not provide criteria or guidance that it would apply in the case-by-case exception process to determine whether

[59] Consumers Comments at 3–8.

[60] Consumers Comments at 4 (citing July 29, 1998 letter order in Docket No. EL98–21–000).

[61] ITC Reply Comments at 6–7.

[62] Portland Comments at 4.

[63] Holland Comments at 6.

[64] Holland Comments at 9. *See also* Barrick Reply Comments at 2.

[65] Massachusetts DPU Comments at 10.

[66] Valero Comments at 8–12 (emphasis in original) (citing *Detroit Edison* v. *FERC,* 334 F.3d 48, 54 (D.C. Cir. 2003)).

[67] *See* NOPR, 139 FERC ¶ 61,247 at P 60 n.79 stating that ''an element that falls outside of the definition of bulk electric system is not necessarily local distribution.''

an element above 100 kV should be excluded as local distribution, as directed in Order No. 743.[68] Thus, we cannot conclude that the case-by-case exception process will ''adequately differentiate[] between local distribution and transmission facilities in an objective, consistent, and transparent manner.'' [69]

69. In Order No. 743, the Commission stated that determining the line between transmission and local distribution should be part of the exception process and left it to NERC in the first instance to determine how to make such a determination.[70]

After further review of NERC's proposal in this proceeding, and upon consideration of the comments submitted, we believe that it is more appropriate that the Commission make such case-by-case jurisdictional determinations when necessary, and to apply the Seven Factor Test set forth in Order No. 888 to make such determinations. The determination whether an element or facility is ''used in local distribution,'' as the phrase is used in the FPA, requires a jurisdictional analysis that is more appropriately performed by the Commission.[71] Further, Commission review of whether a facility is used in local distribution comports with relevant legal precedent. As we explained in Order No. 743–A, ''[w]hether facilities are used in local distribution will in certain instances raise a question of fact, which the Commission has jurisdiction to determine.'' [72]

70. As noted above, application of the ''core'' definition and the four exclusions should serve to exclude most facilities used in local distribution from the bulk electric system. However, there may be certain circumstances that present a factual question as to whether a facility that remains in the bulk electric system after applying the ''core'' definition and the four exclusions should nonetheless be excluded because it is used in local distribution. In such circumstances, which we expect will be infrequent, an entity must petition the Commission seeking a determination that the facility is used in local distribution.[73] Such petitions should include information that will assist the Commission in making such determination, and notice of the petition must be provided to NERC and relevant Regional Entities.

71. In addressing such petitions, the Commission will apply the Seven Factor Test set forth in Order No. 888. In Order No. 888, the Commission articulated the Seven Factor Test to determine, on a case-by-case basis, whether a facility is a local distribution facility or a transmission facility.[74] However, the Commission has found that the factors identified in the Seven Factor Test are not exclusive when determining whether an element is used for local distribution. Specifically, the Commission recognized that the Seven Factor Test does not resolve all possible issues and that ''there may be other factors that should be taken into account in particular situations.'' [75] The Commission will apply a similar analysis in determining in the context of FPA section 215 whether a facility is used in local distribution. In other words, while the starting point for the Commission's analysis will be an analysis based on the Seven Factor Test, the Commission will consider other factors that should be taken into account in particular situations.

72. To reiterate, we expect that the 100 kV threshold as a ''first step or proxy'' for determining which facilities should be included in the bulk electric system, plus the four exclusions (in particular the local network exclusion E3), will exclude many facilities that are used in local distribution and thus should be excluded from the bulk electric system. This approach recognizes that, although local distribution facilities are excluded from the definition, it still may be necessary to determine which facilities are local distribution, and which are transmission. Whether facilities are used in local distribution will in certain instances raise a question of fact, which the Commission has jurisdiction to determine. We decline to clarify, as Portland requests, that for entities who apply the local distribution exception in good faith, any future regulatory determination that such distribution facilities are to be treated as part of the bulk electric system within the scope of FPA section 215 regulation will be prospective only. As explained above, in circumstances where a factual question remains after applying the ''core'' definition and the exclusions, entities must apply to the Commission for a determination of whether an element is used in local distribution. We believe this approach provides a means to maintain consistency and transparency across the various reliability regions but still have the necessary flexibility to make case-by-case determinations appropriate for reliability.

73. To the extent the various reply comments by ITC Companies, MISO and Consumers raise questions about the status of specific facilities, we decline to address them in this Final Rule as this rulemaking proceeding is not the proper forum to decide such matters.

D. Inclusions and Exclusions in the Definition of Bulk Electric System NOPR Proposal

74. In the NOPR, the Commission proposed to approve, in addition to the core definition, specific inclusions and exclusions because the inclusions and exclusions provide added clarity regarding which elements are part of the bulk electric system as compared to the existing definition. In the NOPR, the Commission also posed questions about how some of the inclusions and exclusions will be applied to better understand potential applications of the inclusions and exclusions, their effect on identifying the facilities or elements for bulk electric system reliability, and whether possible gaps exist. We address these questions below.

---

[68] The Commission, in Order No. 743–A, explained that ''the Seven Factor Test could be relevant and possibly is a logical starting point for determining which facilities are local distribution for reliability purposes, while also allowing NERC flexibility in applying the test or developing an alternative approach as it deems necessary.'' Order No. 743–A, 134 FERC ¶ 61,210 at P 69. NERC, in its petition, did not adopt a specific test or criteria for determining whether a facility is local distribution, but indicated that an entity seeking an exception for local distribution facilities could provide a ''seven factor'' analysis as one means to support the petition. NERC BES Petition at 49.

[69] *See* NOPR, 139 FERC 61,247 at P 59.

[70] Order No. 743, 133 FERC ¶ 61,150 at P 38.

[71] *Standardization of Generator Interconnection Agreements and Procedures,* Order No. 2003, FERC Stats. & Regs. ¶ 31,146, at P 803 (2003), *order on reh'g,* Order No. 2003–A, FERC Stats. & Regs. ¶ 31,160, *order on reh'g,* Order No. 2003–B, FERC Stats. & Regs. ¶ 31,171 (2004), *order on reh'g,* Order No. 2003–C, FERC Stats. & Regs. ¶ 31,190 (2005), *aff'd sub nom. Nat'l Ass'n of Regulatory Util. Comm'rs* v. *FERC,* 475 F.3d 1277 (D.C. Cir. 2007), *cert. denied,* 552 U.S. 1230 (2008) (''Local distribution' is a legal term; under FPA Section 201(b)(1), the Commission lacks jurisdiction over local distribution facilities.'').

[72] Order No. 743–A, 134 FERC ¶ 61,210 at P 67 and n.78, (citing *California Pacific Electric Co., LLC,* 133 FERC ¶ 61,018 at n.59 (2010) (citing *FPC* v. *Southern California Edison Co.,* 376 U.S. 205, 210 n.6 (1964) (asserting that ''the Supreme Court has determined that whether facilities are used in local distribution involves a question of fact to be decided by the [Commission] as an original matter.''))). *See also Connecticut Light & Power Co.* v. *Federal Power Commission,* 324 U.S. 515, 534–35 (1945).

[73] Such petitions will be assigned an ''RC'' docket prefix. The determinations would be public proceedings subject to notice and comment requirements which will allow NERC and interested parties (including state regulators) to provide input on a petition.

[74] Order No. 888, FERC Stats. & Regs. ¶ 31,036 at 31,771, 31,783–84, Appendix G.

[75] Order No. 888–A, FERC Stats. & Regs. ¶ 31,048 at 30,242.

1. Inclusion I1 (Transformers)

NOPR Proposal

75. Inclusion I1 includes as part of the bulk electric system ''[t]ransformers with the primary terminal and at least one secondary terminal operated at 100 kV or higher unless excluded under [the radial system or local network exclusion].'' In its petition, NERC explained that, due to transformers having multiple windings operating at differing voltages, the intent of inclusion I1 includes transformers operating at 100 kV or higher on the primary winding and at least one secondary winding.[76]

76. In the NOPR, the Commission stated that NERC's approach to inclusion I1 ''is a reasonable approach to identifying transformers that are appropriately included as part of the bulk electric system.'' [77] However, the Commission expressed concern whether a particular transformer—operated at 100 kV or higher on the primary winding but all secondary terminals are operated below 100 kV—should be part of the bulk electric system or whether the exception process would be sufficient to include these transformers.[78] The Commission also requested comment on whether transformers that have a terminal operated at 100 kV or above on the high side and below 100 kV on the low side should be designated as part of the bulk electric system.

Comments

77. NERC supports allowing the exception process to include the transformers described by the Commission. NERC states that the ''vast majority'' of transformers with low side voltages step down to a voltage class that is designed for distribution to load. NERC adds that the 100 kV threshold for secondary windings provides a ''clear demarcation'' between facilities used to transfer power as opposed to those that serve load. According to NERC, while there are instances where transformers with secondary windings below 100 kV are connected in parallel with high voltage transmission lines, it is not possible to craft a bright-line inclusion of such transformers because the distinction may hinge on function as opposed to the physical characteristics of the transformer. NERC states that the exception process can evaluate whether such transformers should be included in the bulk electric system. A majority of commenters share NERC's position and believe that most transformers with the configuration described by the Commission in the NOPR do not impact the bulk electric system and those that do can be classified as part of the bulk electric system through the exception process.[79]

78. SoCal Edison agrees with NERC, but identifies transformers operated in parallel with the bulk electric system as those that should be designated as part of the bulk electric system irrespective of the operational voltage of the transformer. SoCal Edison argues that information regarding such transformers should be provided to the impacted entities, e.g., reliability coordinators and neighboring regional entities. SoCal Edison contends that including these types of transformers in the bulk electric system would have made the Regional Entities, reliability coordinators, transmission operators and balancing authorities aware of the contingencies of the transformers and their impact on the bulk electric system in the September 2011 blackout.

79. SmartSenseCom states that transformers that operate at 100 kV or above with any secondary windings below 100 kV should be included. On the other hand, Consumers does not support inclusion I1 because it goes beyond the Commission's jurisdiction and would confuse the distinction between the bulk electric system and local distribution. Consumers argues that inclusion I1 may create a ''moving registration target'' if related facilities are added to the bulk electric system.[80]

Commission Determination

80. We find that inclusion I1 is a reasonable approach to identifying transformers that are appropriately included as part of the bulk electric system. We agree with NERC that inclusion I1 includes transformers operating at 100 kV or higher on the primary winding and at 100 kV or higher on at least one secondary winding. With regard to the Commission's concern in the NOPR about inclusion of a transformer that is operated at 100 kV or higher on the primary winding but all secondary terminals are operated below 100 kV, we agree with NERC that it is appropriate for such transformers to be considered for inclusion through the exception process. We are persuaded that transformers with low side voltages stepped down to a voltage class that is designed to distribute power to load and, therefore, the 100 kV threshold for secondary windings provides an initial screening between facilities used to transfer power as opposed to those that serve load. We agree with NERC's assessment that crafting an inclusion for transformers described by the Commission is difficult because the distinction may hinge on function as opposed to the physical characteristics of the transformer. Therefore, we decline to include such transformers in inclusion I1.

81. With regard to the specific configurations identified by SoCal Edison (transformers that operate in parallel with the bulk electric system irrespective of the operational voltage of the transformer), we will not make a determination of general application. Rather, such matters should be addressed in the case-by-case exception process.

82. We do not agree with Consumers that inclusion I1 would be ineffective because it would include lower voltage distribution facilities that were not designed to provide reliability to the bulk electric system or prevent cascading outages. The 100 kV threshold for secondary windings provides a bright line between facilities used to transfer power as opposed to those that serve load, and if a transformer is included pursuant to inclusion I1, but an entity believes it is not necessary for operation of the interconnected transmission network, it may be considered for exclusion through the exception process.

2. Inclusion I2 (Generating Resources)

NOPR Proposal

83. Inclusion I2 of the bulk electric system definition provides for specific inclusion of generating resources with gross individual nameplate rating greater than 20 MVA or gross plant/facility aggregate nameplate rating greater than 75 MVA. NERC developed this inclusion based on the text of the Registry Criteria for generating units while providing clarity by including ''the generator terminals through the high-side of the step-up transformer connected at a voltage of 100 kV or above.'' [81]

84. In the NOPR, the Commission agreed that inclusion I2 is consistent with the individual and aggregate nameplate rating thresholds set forth in

[76] NERC BES Petition at 17.

[77] NOPR, 139 FERC ¶ 61,247 at P 63.

[78] In the NOPR the Commission noted that the joint NERC and Commission staff report on the September 8, 2011, Arizona-Southern California blackout explains how transformers of this type were not monitored or analyzed by the reliability coordinator, transmission operators and balancing authorities. NOPR, 139 FERC ¶ 61,247 at P 63.

[79] *E.g.* APPA, EEI, ELCON, WREA, Anaheim, Riverside, Imperial Irrigation District, G&T Cooperatives, NV Energy, NESCOE, and TAPS.

[80] Consumers Comments at 9–10.

[81] NERC BES Petition at 17.

the Registry Criteria but noted the differing descriptions of the connection point of the generating resources.[82] Inclusion I2 specifies ''generator terminals through the high-side of the step-up transformer(s) connected at a voltage of 100 kV or above,'' and the Registry Criteria specifies a ''direct connection'' to the Bulk-Power System. Accordingly, the Commission requested comment whether inclusion I2 will result in a material change to registration of existing generating units due to the difference in the language regarding the connection point. The Commission also requested comment if a generating unit, with a gross individual nameplate rating greater than 20 MVA connected through the high-side of the step-up transformer connected at a voltage of 100 kV or above when the low side of the transformer is less than 100 kV, is included in the bulk electric system pursuant to inclusion I2. Further, the Commission asked how this result differs for a generation resource with two or more step-up transformers where the last transformer in the series operates at 100 kV or above.

Comments

85. Most commenters do not believe that inclusion I2 will materially change registration of generating resources. NERC states that inclusion I2 connection point language merely clarifies the ''directly connected'' language in the Registry Criteria. NERC explains that while most generation is connected through a unit transformer on the high voltage bus within a facility, there are instances where generators are connected to lower voltages within a facility. NERC adds that most of these types of configurations are in older facilities where the higher voltage bus was added after the original generators. NERC confirms that the specific scenario described by the Commission would result in the generator being included in the bulk electric system provided that the transformers reside within a single site boundary and are used only to step-up the output voltage of the generator.[83] APPA and others agree with NERC's view. APPA adds that, if the transformers in question are also used to deliver power to serve local load, the generation resources and transformers should be excluded from the bulk electric system.[84] PSEG Companies believe that inclusion I2 addresses the issue regarding two step-up transformers in series. PSEG Companies explain that both step-up transformers are part of the generator per inclusion I2 if the purpose of the transformers is to solely step-up the output voltage.

86. Arizona Public Service requests that the Commission clarify whether the voltage connection language in inclusion I2 applies only to the aggregated 75 MVA threshold or also to the 20 MVA threshold for individual generating units. Southern Companies believe that there are instances where generators may be connected to lower voltages that may fit under inclusion I2 but would not necessarily fit in the Registry Criteria.

87. Some commenters do not support inclusion I2 for varying reasons. Dominion opposes inclusion of elements such as those provided for in inclusion I2 that are already subject to reliability standards because the element meets the criteria in the NERC Compliance Registry. ISO New England states that the connection language in inclusion I2 should be eliminated. ISO New England maintains that interpreting inclusion I2 to be based on generator plant size, independent of the voltage connection, is important from a generator stability modeling view point. This is because generators connected at voltages less than 100 kV can have a significant impact on system stability.[85] ISO New England supports adding generators connected at lower voltages but not the system to which the generators are connected. ISO New England believes that adding generators, regardless of their connection voltage levels, would increase the universe of registered generators and would enhance reliability.

88. MISO recommends that the Commission clarify that operators of generating resources included through inclusion I2 will only be subject to Reliability Standards for generators unless a specific determination is made that other standards should apply to a particular piece of equipment. MISO believes that, without this clarification, inclusion I2 could increase the number of transmission operators by including generation equipment.

89. Barrick believes that the term ''gross plant/facility'' in inclusion I2 needs to be clarified. Barrick states that it is not clear whether the terms are based on geographic proximity or structural definition. Barrick is also concerned that inclusion I2 is based on ''gross'' rating while exclusion E2 is based on net capacity and exclusion E3(a) is based on a non-retail basis, and that read together inclusion I2 and exclusions E2 and E3(a) appear to be in conflict.[86] In reply comments, Barrick suggests that, instead of focusing on nameplate ratings, the focus should be on the normal configuration and operation of generation.

90. SmartSenseCom states that the Commission should direct NERC to modify inclusion I2 to include generating units that are stepped up to 100 kV or above containing a transformer with a low side below 100 kV because, at these levels, generating resources should be presumed to impact reliability. SmartSenseCom contends that Reliability Standards should apply to such facilities ''in light of their potential impact to system reliability, especially given the increasing levels of distributed generation penetration that is expected in the near future.''[87] Springfield questions whether multiple individual units are considered one unit if they have a shared bus. Springfield believes that such instances should not be considered individually.

Commission Determination

91. The Commission approves inclusion I2. Based on the language of inclusion I2, its derivation from the Registry Criteria and the statements from NERC and commenters, the Commission concludes that application of inclusion I2 will not materially change registration of generating resources. The Commission accepts NERC's explanation that the inclusion I2 connection point language merely clarifies the ''directly connected'' language in the NERC Registry Criteria, section III.c.1. Further, the Commission agrees with NERC and other commenters that multiple step-up transformers that are solely used to deliver the generation to the bulk electric system at 100 kV or above qualify the generator and the step-up transformers pursuant to inclusion I2.

92. APPA and commenters claim that, if a transformer is also used to deliver power to serve local load, through, for example a 69 kV network, the generation resources and transformers should be excluded from the bulk electric system. The Commission agrees with the specific example. In such cases, local load refers to end-user load and not generator-specific station service load. This example depicts a generator whose step-up transformer delivers the generation to a voltage level of 69 kV and thus does not meet the criteria in inclusion I2. A second

[82] NOPR, 139 FERC ¶ 61,247 at P 65.

[83] NERC Comments at 9–10. *See also* comments of EEI.

[84] APPA Comments at 14–15. *See also* comments of National Grid, TAPS, NESCOE, and G&T Cooperatives.

[85] ISO New England Comments at 4.

[86] Barrick Comments at 10.

[87] SmartSenseCom Comments at 12.

transformer in this example that connects the 69 kV network to the bulk electric system is not solely delivering the generation to the bulk electric system but also delivers power from the bulk electric system to the 69 kV network.

93. Regarding Arizona Public Service's request for clarification, the Commission finds that the voltage connection language in inclusion I2 applies to both the aggregated 75 MVA threshold for a plant/facility and the 20 MVA threshold for individual units.

94. The Commission disagrees with Dominion's contention that inclusion I2 is not needed because the elements identified in inclusion I2 already meet the Registry Criteria. The NERC registration process uses element criteria to identify and register functional entities, not the actual equipment. In contrast, the focus of the bright-line definition is the facilities, not the owners or operators of the facilities. Similarly, with regard to Southern Companies' belief that there are instances where generators may be connected to lower voltages that may fit under inclusion I2 but would not necessarily fit in the Registry Criteria, the Commission agrees that the Registry Criteria allows the Regional Entities and NERC to consider other factors regarding entity registration which may result in cases where the bulk electric system status and registry status differs for certain equipment owners and operators.

95. Regarding ISO New England's assertion that generators that connect to the bulk electric system via transmission facilities with voltages below 100 kV are needed for reliability, the Commission believes these generators can be added to the bulk electric system through the exception process, and if registration is warranted for the owners and operators of these generators, the Registry Criteria provides NERC and the Regional Entities the option of registering ''[a]ny generator, regardless of size, that is material to the reliability of the Bulk Power System.'' [88] Aggregate stability impacts of generation below 100 kV could fall into this category of ''material to the reliability of the Bulk Power System.''

96. With respect to the suggestions and requests for clarification submitted by MISO, Barrick, SmartSenseCom and Springfield, commenters may raise these suggestions in NERC's Phase 2 development effort.

[88] NERC Statement of Compliance Registry Criteria, section III.c.4.

3. Inclusion I3 (Blackstart Resources)

NOPR Proposal

97. NERC included as part of the bulk electric system definition ''Blackstart Resources identified in a Transmission Operator's restoration plan.'' In the NOPR, the Commission agreed with NERC that inclusion of blackstart resources in the definition is vital to reliability and is an improvement to the definition. The Commission requested clarification whether the term ''restoration plan'' refers to the system restoration plans required in the Emergency Preparedness and Operations (EOP) Reliability Standards or included in a Commission approved tariff.[89] The Commission also expressed concern whether a reliability gap exists with regard to cranking paths. The Commission explained that cranking paths are an important element of system restoration, and questioned ''whether reliability can be adequately maintained when blackstart generators are defined as part of the bulk electric system but not the transmission paths that are used to deliver the energy from blackstart generators to the integrated transmission system.'' [90] Accordingly, the Commission requested comment on whether a reliability gap exists and also requested comment on the appropriate role, if any, of state regulators in ensuring that energy from blackstart generation is reliably delivered through cranking paths to restart the system after an event.

Comments

98. NERC confirms that the ''restoration plan'' in inclusion I3 refers to the restoration plans in the EOP Reliability Standards. Other commenters support NERC's explanation.[91] With regard to cranking paths, NERC explains that cranking paths above 100 kV are included in the bulk electric system by the core definition. NERC states that some cranking paths identified in a restoration plan ''are composed of distribution system elements.'' [92] NERC adds that certain Reliability Standards, such as Reliability Standards CIP–002–4 and EOP–005–2, address reliability of cranking paths without regard to voltage which demonstrates there are other ways to ensure reliable operation of the bulk electric system without including non-bulk electric system cranking paths within the definition. In contrast, PSEG Companies request that, if the Commission supports NERC's exclusion of cranking paths below 100 kV, the Commission confirm that below 100 kV cranking paths would be excluded from being enforced in Reliability Standards that address cranking paths unless they are added to the bulk electric system by the exception process.[93]

99. Other commenters agree that no reliability gap exists and that the Commission correctly noted that including cranking paths may improperly bring distribution level elements into the bulk electric system. Southern Companies and others contend that if a cranking path that does not fall within the definition of bulk electric system but is needed for reliability, the exception process would be the place to make that determination.[94] NESCOE states that cranking paths are generally part of the distribution system and state regulators have the responsibility to ensure the reliability of these lower voltage facilities and are acutely aware of the importance of effective blackstart capability. NESCOE adds that these facilities are needed for restoration not for continuous operation.[95] ODEC is concerned that including cranking paths will create an incentive for generators not making their units available for blackstart services. Alameda suggests that ''any potential gap can be closed by requiring [t]ransmission [o]perators (''TOPs'') that identify blackstart generation and a related cranking path or paths in their system restoration plans to analyze and enter into an operating agreement with the owner of identified cranking path facilities not owned by the [transmission operator].'' [96]

100. While other commenters agree that the term ''restoration plan'' refers to the EOP Reliability Standards, they assert that cranking paths should be included in the bulk electric system. Idaho Power, ITC Companies and BPA assert that cranking paths are crucial to system restoration and implicate reliability even if they are local distribution or below 100 kV facilities.[97] ITC Companies state that not including cranking paths will cause regional differences and inconsistent application resulting in some owners electing to

[89] NOPR, 139 FERC ¶ 61,247 at P 67. Reliability Standard EOP–005–1, System Restoration Plans, requires a transmission operator to create ''a restoration plan to reestablish its electric system in a stable and orderly manner in the event of a partial or total shutdown of its system.''

[90] NOPR, 139 FERC ¶ 61,247 at P 68.

[91] *E.g.* EEI, APPA, Southern Companies, SoCal Edison, PSEG Companies, and NV Energy.

[92] NERC Comments at 11.

[93] PSEG Comments at 10.

[94] Southern Companies Comments at 7. *See also* TAPS Comments at 5.

[95] NESCOE Comments at 10.

[96] Alameda Comments at 6.

[97] Idaho Power Comments at 4, ITC Companies at 3–4. *See also* BPA Comments at 3–4.

exclude such assets. Without cranking paths included in the definition, ITC Companies state that they will be ''required to ensure its blackstart plan does not include blackstart generators connected to transmission facilities at voltages below 100 kV since [they] could not be assured that the proper standards are being followed for these blackstart cranking paths.'' [98]

101. MISO recommends that the Commission clarify that the term ''restoration plan'' refers to the EOP Reliability Standards but not include all blackstart resources in a Commission-approved tariff. MISO is concerned that including blackstart resources from sources other than the EOP Reliability Standards is not necessary for reliability and could encourage generators to remove blackstart resources in order to avoid being subject to ''unduly complex requirements.'' [99]

Commission Determination

102. We find that NERC's inclusion of blackstart resources in the definition is an improvement to the definition. We also agree with NERC's statement that the ''restoration plan'' in inclusion I3 refers to the restoration plans in the EOP Reliability Standards. With regard to cranking paths, the Commission declines to include all cranking paths regardless of voltage level. The Commission finds that cranking paths operating at or above 100 kV are included in the bulk electric system by the core definition, and if a cranking path that does not fall within the definition of bulk electric system, (i.e. operating at or above 100 kV) but is needed for reliability, such elements can be included in the bulk electric system through the exception process. We also disagree that not including cranking paths will cause regional differences and inconsistent application resulting in some owners electing to exclude such assets. The revised definition includes all Transmission Elements at or above 100 kV. Thus, to the extent a cranking path is operating at or above 100 kV and a ''Transmission Element,'' it would be included in the bulk electric system. If a cranking path is below 100 kV and is necessary for operation of the interconnected transmission network or operates at or above 100 kV and is not necessary for the operation of the interconnected transmission network, the status of the cranking path may be determined in the exception process. These steps will ensure consistent treatment across the regions. In response to ITC Companies' concern that, without cranking paths included in the definition it will be required to ensure its blackstart plan does not include blackstart generators connected to transmission facilities at voltages below 100 kV, we note that such elements can be considered for inclusion through the exception process. Similarly, with regard to NESCOE's statement that lower voltage cranking paths are generally part of the distribution system, we note that facilities operating below 100 kV would be excluded as part of applying of the core definition. In addition, as we discuss above, in certain instances the Commission will make determinations as to which facilities are used in local distribution and thus should be excluded from the bulk electric system.[100]

103. With regard to PSEG Companies' request that the Commission confirm that Reliability Standards do not apply to below 100 kV cranking paths unless they are added to the bulk electric system by the exception process, we find that PSEG Companies' request is outside the scope of this proceeding but note that Reliability Standard EOP–005–2 addresses cranking paths with no voltage limits.[101]

4. Inclusion I4 (Dispersed Power Producing Resources)

NOPR Proposal

104. NERC asserts inclusion I4, dispersed power producing resources with aggregate capacity greater than 75 MVA (gross aggregate nameplate rating), is needed ''to accommodate the effects of variable generation'' on the bulk electric system.[102] NERC further stated that even though inclusion I4 could be considered subsumed in inclusion I2 (generating resources), NERC believes it is appropriate ''to expressly cover dispersed power producing resources utilizing a system designed primarily for aggregating capacity.'' [103]

105. In the NOPR the Commission stated that inclusion I4 provides ''useful granularity'' in the bulk electric system definition, but requested comment whether inclusion I4 includes ''the individual elements (from each energy-producing resource at the site through the collector system to the common point at a voltage of 100 kV or above) used to aggregate the capacity and any step-up transformers used to connect the system to a common point at a voltage of 100 kV or above.'' [104]

Comments

106. NERC states that the inclusion is meant to address the dispersed power producing resources themselves, not the individual elements of the collector systems operated below 100 kV. With regard to energy delivery elements in collector systems and interconnection facilities, NERC states these items were specifically not included in inclusion I4. According to NERC, this decision was intended to avoid categorically including as part of the bulk electric system assets that may include local distribution facilities. EEI believes that inclusion I4 applies to generating resources meeting the threshold in the aggregate, not the individual generating units. EEI agrees with NERC that the inclusion does not include individual elements of the collector systems operated below 100 kV. LPPC believes that generating units aggregating to 75 MVA are often very small and non-dispatchable, and the reliability implications of these units will be negligible but the compliance burden would be quite high.

107. Several commenters urge the Commission to not interpret inclusion I4 as including wind turbines and electrical collector systems within a wind plant and only include the electrical equipment at the point of interconnection with the bulk electric system.[105] AWEA believes that including all this equipment will potentially burden the owners with NERC compliance processes that were intended for large scale generators. AWEA argues that the ''main transformer's high-side terminal and the generator lead/tie line'' should also be excluded unless another generator connects to the initial generator's facilities.[106] AWEA asserts that no one has demonstrated that there is any material reliability benefit from including resources envisioned by inclusion I4. AWEA and others state that if the Commission believes such resources should be included, such inclusion should be done on a case-by-case basis rather than generically.[107]

[98] ITC Comments at 5.

[99] MISO Comments at 6.

[100] *See supra* PP 66–73.

[101] Reliability Standard EOP–005–2, Requirement R6 states ''[e]ach [t]ransmission [o]perator shall verify through analysis of actual events, steady state and dynamic simulations, or testing that its restoration plan accomplishes its intended function. This shall be completed every five years at a minimum.'' Requirement R6.1 states that the transmission operator shall verify ''[t]he capability of [b]lackstart [r]esources to meet the [r]eal and [r]eactive [p]ower requirements of the [c]ranking [p]aths and the dynamic capability to supply initial [l]oads.''

[102] NERC BES Petition at 18.

[103] *Id.*

[104] NOPR, 139 FERC ¶ 61,247 at P 71.

[105] *See, e.g.,* AWEA, Southern Companies, Consumer Energy, BPA. Hydro One, G&T Cooperatives, and ISO New England.

[106] AWEA Comments at 2.

[107] *E.g.,* Idaho Power.

108. Along the same lines, NESCOE believes that, absent a reliability risk a generic inclusion could adversely impact state policies to encourage renewable generation development by imposing additional costs. NESCOE states that setting the line for inclusion at 75 MVA is not supported by technical analysis since intermittent sources of power deliver only a fraction of their nameplate rating. NESCOE believes 300 MVA is a better threshold.

109. ISO New England contends that the term ''common point'' is unclear and notes that the inclusion could be interpreted to mean that if the individual generating units are ''all collected at 34.5 kV, the 'common point' is at 34.5 kV and the entire group of resources should be found to be [not part of the bulk electric system].'' [108] ISO New England believes this is not an appropriate interpretation because it would defeat the intent of the inclusion which is to classify large aggregated generating stations as part of the bulk electric system. Similarly, Springfield questions the meaning of ''collector system'' and proposes language to define it.[109]

110. SmartSenseCom states that facilities over a certain significant nameplate rating that are stepped up to over 100 kV should be subject to Reliability Standards in light of their potential impact to system reliability. SmartSenseCom suggests that the Commission direct NERC to modify inclusions I2 and I4 in order to ensure that generating units that are stepped up to 100 kV or above by the use of a transformer with a low side of less than 100 kV (or multiple contiguous transformers of less than 100 kV on the low side) are also included within this definition.[110]

111. MISO recommends that the Commission withdraw its proposal to approve inclusion I4. MISO believes inclusion I4 is unnecessary given the criteria in inclusion I2. MISO states that elements meeting the criteria in inclusion I2 would be considered part of the bulk electric system, irrespective of whether it is considered a dispersed power producing resource. MISO adds that a specific inclusion for dispersed power producing resources could subject the collector systems to unnecessary monitoring by the reliability coordinator or other registered entities as collector systems at dispersed power producing facilities generally do not affect the reliability of the bulk electric system.

Commission Determination

112. The Commission finds that inclusion I4 provides useful granularity in the bulk electric system definition. The clarifying language in inclusion I4 regarding the collector system language is consistent with language in the Registry Criteria, section III.c.2. The Commission agrees that it is appropriate ''to expressly cover dispersed power producing resources utilizing a system designed primarily for aggregating capacity.'' [111]

113. As the Commission previously stated in the inclusion I2 discussion, multiple step-up transformers that are solely used to deliver the generation to the bulk electric system at 100 kV or above qualify the generator or plant/facility and the step-up transformers for inclusion in the bulk electric system.

114. Similarly, the collector system in inclusion I4, described by NERC and others as being designed for aggregating capacity and solely used to deliver the aggregated capacity to the bulk electric system at 100 kV and above, falls into the category of multiple step-up transformers through the high side of the main transformer that connects to 100 kV or above. NERC reasons that proposed inclusion I4 was intended to avoid categorically including assets that may include local distribution facilities. While we believe most collector systems operate below 100 kV, the Commission disagrees that collector systems described in inclusion I4 that solely deliver aggregated generation to the bulk electric system contain local distribution facilities because power is delivered from the collector system to the bulk electric system. However, the Commission will not direct NERC to categorically include collector systems pursuant to inclusion I4.

115. We disagree with AWEA and other commenters that contend that inclusion I4 should be interpreted to not include the dispersed power producing resources within a wind plant in the bulk electric system. We agree with NERC's statement that the purpose of this inclusion is to include such variable generation (e.g., wind and solar resources). NERC noted that, while such generation could be considered subsumed in inclusion I2 (because the gross aggregate nameplate rating of the power producing resources must be greater than 75 MVA), NERC considered it appropriate for clarity to add this separately-stated inclusion to expressly cover dispersed power producing resources using a system designed primarily for aggregating capacity. In addition, although dispersed power producing resources (wind, solar, etc.) are typically variable suppliers of electrical generation to the interconnected transmission network, there are geographical areas that depend on these types of generation resources for the reliable operation of the interconnected transmission network. The Commission believes that owners and operators of these resources that meet the 75 MVA gross aggregate nameplate rating threshold are, in some cases, already registered and have compliance responsibilities as generator owners and generator operators. Regarding AWEA's request that a transformer's high-side terminal and the generator lead line should also be excluded, such determinations may be made on a case-by-case basis in the exception process. With regard to commenters who believe that dispersed power producing resources should be included on a case-by-case basis rather than generically, this would be inconsistent with the bright-line concept that NERC developed to have consistent application of the definition across the country. If such generating resources are included through inclusion I4, they are eligible for exclusion through use of the exception process. With respect to the concern raised by ISO New England regarding the term ''common point,'' ISO New England may raise this concern in NERC's Phase 2 development effort.

5. Inclusion I5 (Static or Dynamic Reactive Power Devices)

NOPR Proposal

116. Inclusion I5 identifies as part of the bulk electric system ''[s]tatic or dynamic devices (excluding generators) dedicated to supplying or absorbing Reactive Power that are connected at 100 kV or higher, or through a dedicated transformer with a high-side voltage of 100 kV or higher, or through a transformer that is designated in Inclusion I1.'' In its petition, NERC explained that this inclusion is the technical equivalent of inclusion I2 (generating resources), for reactive power devices and points out that the existing definition is unclear as to how these devices are treated.[112] NERC stated inclusion I5 provides clarity by ''providing specific criteria for Reactive Power devices, thereby further limiting subjectivity and the potential for

[108] ISO New England Comments at 7.

[109] Springfield proposes to add the following sentence at the end of inclusion I4: ''For purposes of this inclusion, a Collector System is any infrastructure not connected to load—where parasitic load associated with a generation unit or units is not considered load.''

[110] SmartSenseCom Comments at 12.

[111] NERC BES Petition at 18.

[112] NERC BES Petition at 18.

discretion'' in the application of the revised definition.[113]

117. In the NOPR, the Commission agreed with NERC that inclusion I5 adds clarity to the application of the bulk electric system definition by providing specific criteria for reactive power devices. For cases where the reactive power device is connected through a transformer designated in inclusion I1, the Commission requested comment whether both the reactive power device and the transmission elements connecting the reactive power device to the transformer are included as part of the bulk electric system pursuant to inclusion I5.[114]

Comments

118. NERC and other commenters note that inclusion I5 is intended to include the reactive resource itself and the other portions of the definition are intended to designate whether the remaining electrical components are part of the bulk electric system.[115] NERC, EEI, National Grid, Utility Services and G&T Cooperatives refer to inclusion I1 as the proper place to determine whether transformers connected to reactive devices are included as part of the bulk electric system.

119. BPA and WPPC support excluding both the reactive device and the transformer from the bulk electric system if the device supports local distribution. Conversely, if the facilities provide reactive and voltage support to the bulk electric system, the reactive device and associated equipment, such as the transformer, should be classified as a bulk electric system facility.

120. AEP considers the transmission elements connecting the reactive power device to the transformer to be included in the bulk electric system definition and should be deemed part of inclusion I5.[116] Idaho Power contends that both the reactive device and the transformer should be included in the bulk electric system. Idaho Power states that if the transformer is included as part of inclusion I1, then it should be included.[117]

121. PSEG Companies view the issue as one of ''bulk electric system contiguity'' and therefore should be addressed during Phase 2. MISO recommends that the Commission require NERC to include a size threshold or an impact test. According to MISO, this will avoid creating incentives to owners of small reactive devices to disconnect them to avoid being classified as transmission owners or operators. With regard to transformers, MISO states that both the reactive power device and the transmission elements are included, but because these facilities have a generally localized impact on reliability, MISO recommends that the Commission clarify that they are not transmission equipment that subjects their owners and operators to the requirements applicable to registered transmission operators under the NERC Reliability Standards.

122. G&T Cooperatives suggest two clarifications. First, inclusion I5 should not apply to reactive power devices that are connected to the bulk electric system by a radial line excluded by exclusion E1 or a local network excluded by exclusion E3. G&T Cooperatives view this exclusion as implicit in inclusion I5, which references devices ''connected at 100 kV or higher, or through a dedicated transformer with a high-side voltage of 100 kV or higher, or through a transformer that is designated in [i]nclusion I1.'' Second, G&T Cooperatives believe that inclusion I5 should be clarified to include a minimum size threshold similar to the size threshold for generating resources under Inclusion I2. According to G&T Cooperatives because inclusion I2 does not apply to all generating resources and inclusion I5 is the ''technical equivalent'' of inclusion I2, a size threshold comparable to that found in inclusion I2 is implicit for reactive power devices.

Commission Determination

123. The Commission approves inclusion I5 and finds that the inclusion adds clarity to the application of the bulk electric system definition by providing specific criteria for reactive power devices. The Commission also accepts NERC's response for cases where the reactive power device is connected through a transformer designated in inclusion I1—that the reactive resource itself is included in the bulk electric system pursuant to inclusion I5 and the transmission elements connecting the reactive power device to the transformer are addressed in other portions of the definition. The Commission notes that this interpretation is different from inclusion I2 because inclusion I2 specifies including the equipment (step-up transformers) that connects generators to the bulk electric system. Nonetheless inclusion I5 provides criteria for reactive power devices that are not explicitly addressed in the existing definition. The Commission does not agree with G&T Cooperatives that exclusions E1 and E3 override inclusion I5 and exclude the reactive power devices. Exclusions E1 and E3 exclude transmission elements only and not resources.

124. The Commission agrees with PSEG Companies that issues, such as whether the connecting equipment for reactive devices should be included pursuant to inclusion I5, can be raised in Phase 2. Similarly, the issues raised by AEP, Idaho Power, MISO and G&T Cooperatives may be raised in NERC's Phase 2 effort.

Exclusions

125. The proposed definition identifies four facilities configurations that should not be included in the bulk electric system: (1) Radial systems; (2) behind-the-meter generating units; (3) local networks; and (4) retail customer reactive power devices.

126. We agree that the proposed exclusions provide clarity and granularity. For example, the exclusion of generating units on the customer's side of the retail meter that serves all or part of the retail load (exclusion E2) and the exclusion for reactive power devices owned and operated by a retail customer for its own use (exclusion E4) provide reasonable limitations on bulk electric system elements. While we approve in the Final Rule the language of exclusions E1, E2 and E4, we have concerns with regard to the application of exclusions E1 and E3 in specific situations and, thus, direct NERC to implement or apply these exclusions consistent with the determinations set forth below. In addition, we direct NERC to remove the 100 kV minimum operating threshold language from exclusion E3.

6. Exclusion E1 (Radial Systems)

127. Exclusion E1 provides as follows:

Radial systems: A group of contiguous transmission Elements that emanates from a single point of connection of 100 kV or higher and:

(a) Only serves Load. Or,

(b) Only includes generation resources, not identified in Inclusion I3, with an aggregate capacity less than or equal to 75 MVA (gross nameplate rating). Or,

(c) Where the radial system serves Load and includes generation resources, not identified in Inclusion I3, with an aggregate capacity of non-retail generation less than or equal to 75 MVA (gross nameplate rating).

Note—A normally open switching device between radial systems, as depicted on prints or one-line diagrams for example, does not affect this exclusion.

[113] *Id.*

[114] NOPR, 139 FERC ¶ 61,247 at P 73.

[115] *E.g.,* EEI.

[116] AEP Comments at 4.

[117] Idaho Power Comments at 5.

In its petition, NERC explained that radial facilities are excluded under the currently effective bulk electric system definition, and the detailed criteria in the revised definition provide enhanced clarity.[118]

Commission Determination

128. The Commission approves exclusion E1. We agree with NERC that the currently-effective definition of bulk electric system excludes radial facilities, and the modifications provide additional granularity regarding the radial exclusion. In the NOPR, the Commission requested comment regarding specific applications of the E1 radial system exclusion. Below, we discuss these applications and comments received, and provide further explanation or direction as we deem appropriate.

a. Exclusion E1 Does Not Apply to Whether Generation Is Included or Excluded

NOPR Proposal

129. In the NOPR, the Commission requested comment on whether exclusion E1 removes from the bulk electric system ''generation connected to a radial system that otherwise satisfies inclusion I2.'' [119] The Commission sought to ensure that the conditions in exclusion E1 would not ''lead to conflicting results when applying inclusion I2 and exclusion E1.[120] The Commission noted that exclusion E1 applies to ''a group of contiguous *transmission* Elements that emanates from a single point of connection of 100 kV or higher * * *.'' [121] The Commission observed that the term ''Elements'' includes the term generator, and that the use of the term ''transmission'' before ''Elements'' indicates that exclusion E1 applies only to transmission elements.[122] Thus, the Commission stated that ''transmission Elements'' do not include generating resources that are bulk electric system resources pursuant to the generating resources included in inclusion I2 connected to a radial line operated at 100 kV above.[123]

Comments

130. NERC confirms that exclusion E1 does not apply to nor is it determinative of whether any generation is included or excluded from the bulk electric system. NERC states that, whether or not generation is included in the bulk electric system is determined by inclusions I2 through I4 and exclusion E2. Other commenters, including EEI, SoCal Edison, TAPS, Hydro One, and Alameda, also state that exclusion E1 does not apply to generating resources. Southern Companies suggest that the use of the term ''includes'' in subparts (b) and (c) could lead to some ambiguity because the implication is that a radial system includes generating resources. Southern Companies suggests that, the word ''serves'' should replace the word ''include'' to better reflect the intent of the provision.

131. PSEG Companies state there is confusion created by the fact that generators included in one provision of the definition (inclusion I2) are excluded under others (exclusions E1 through E3). According to PSEG Companies, a generator cannot be included under one provision of the bulk electric system definition and excluded under another provision and that this issue requires clarification and, once clarified, the bulk electric system definition needs to be modified accordingly.[124]

132. SmartSenseCom states that in the event of a conflict between an inclusion and exclusion, ''there should exist a presumption that the [e]lement be considered included, absent an [e]xception'' and asks that the Commission direct NERC to include a provision that states this presumption.[125]

Commission Determination

133. The Commission finds that the radial system exclusion only applies to ''transmission Elements'' and does not apply to nor is it determinative of whether any generation is included or excluded from the bulk electric system. This understanding is consistent with NERC's defined terms, and consistent with the comment of NERC and other commenters. Further, in response to Southern Companies, AEP and PSEG Companies, we believe that the language of exclusion E1 is sufficiently clear that it does not exclude generation facilities that are otherwise included as part of the bulk electric system pursuant to inclusion I2. Thus, we will not direct NERC to modify exclusion E1 to state this more explicitly. We agree with SmartSenseCom that exclusion E1 should not lead to conflicting results when applying inclusion I2, but we decline to direct NERC to include a provision that specifically states this presumption.

b. Definition of ''Radial Systems,'' Figure 1 and Condition (a) Radials Only Serving Load

NOPR Proposal

134. Exclusion E1 defines the term ''radial systems'' as ''a group of contiguous transmission Elements that emanates from a single point of connection of 100 kV or higher.'' In the NOPR, the Commission requested comment on how NERC's proposal would be applied in the three scenarios. Figure 1 in the NOPR depicted facilities configurations in which all of the 230 kV and 69 kV transmission elements emanate from a single point of connection of 100 kV or higher. The Commission requested comment on whether each of the radial systems shown in figure 1, the 230 kV elements above each transformer to the point of connection to each 230 kV line, respectively, are excluded from the bulk electric system pursuant to exclusion E1.

[118] NERC BES Petition at 18.

[119] NOPR, 139 FERC ¶ 61,247 at P 76.

[120] *Id.*

[121] NOPR, 139 FERC ¶ 61,247 at P 77.

[122] ''Element'' is defined in the NERC Glossary as ''[a]ny electrical device with terminals that may be connected to other electrical devices *such as a generator,* transformer, circuit breaker, bus section, or transmission line. An element may be comprised of one or more components.'' (emphasis added).

[123] *See* NOPR, 139 FERC ¶ 61,247 at P 77 and n.100 (citing NERC BES Petition, Exh. D, Consideration of Comments Report, at 223 (''Exclusion E1 is an exclusion for the contiguous transmission Elements connected at or above 100 kV.'')).

[124] PSEG Comments at 11–13.

[125] SmartSenseCom Comments at 13.

Figure 1
Two Radial Systems Eligible for Exclusion E1

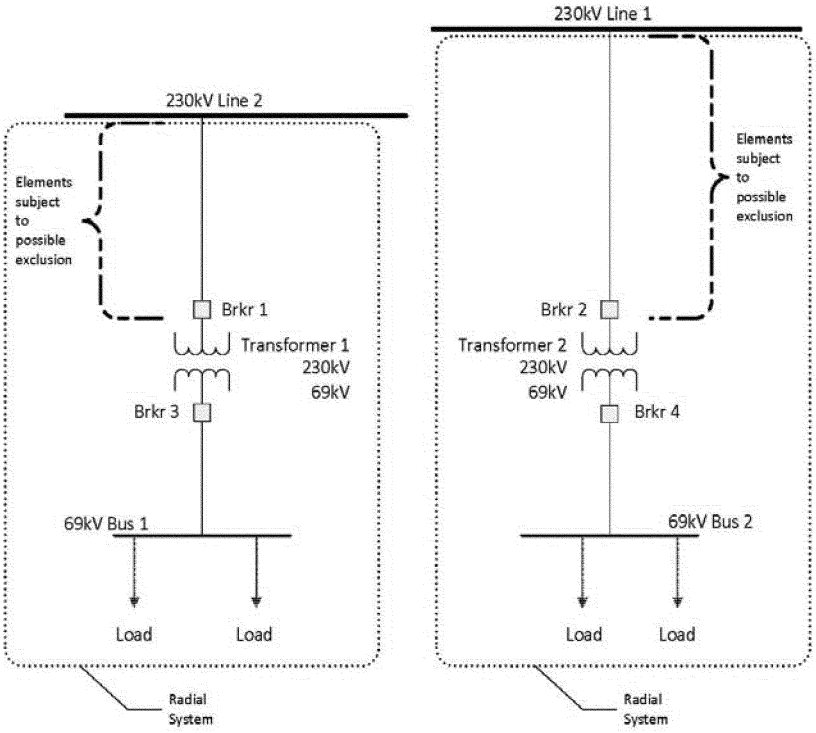

Comments

135. NERC and other commenters state that both radial systems depicted in figure 1 would be subject to exclusion E1(a) because they each only serve load.[126] ELCON agrees with NERC adding that these types of radial systems pose no reliability risk to the interconnected transmission network if the system is lost due to a fault condition. Similarly, SoCal Edison states that the figure 1 facilities would either be excluded or not part of the bulk electric system. SoCal Edison asserts that, because transformers 1 and 2 each have secondary voltages that are less than 100 kV, they do not meet the inclusion I1 requirements and, thus, are not included in the bulk electric system. In other words, SoCal Edison believes exclusion E1 should exclude all radial facilities that are greater than 100 kV up to the point where ''the system is no longer radial, as indicated in figure 1 by the brackets where the 230 kV lines meet [lines 1 and 2].'' [127] APPA believes that all the scenarios described by the Commission could create reliability concerns ''if taken in isolation and operated in a certain matter'' and believes that the exception process can capture configurations that pose a significant risk to the reliable operation of the interconnected transmission network. Idaho Power maintains that it is inappropriate to apply exclusion E1 for 230 kV elements in the scenarios if the breakers are part of the protection scheme for a three terminal 230 kV line. Idaho Power adds that if either breaker only opens for transformer protection, the exclusion would be applicable.

136. Anaheim agrees that the radials shown in figure 1 should be excluded and requests clarification that the associated bus work and protection system equipment installed on those radial lines are also excluded. Anaheim advocates that the exclusion should also apply to protection system equipment on the excluded facilities that provide backup protection for devices that are part of the bulk electric system, i.e. lines 1 and 2 in figure 1.

137. BPA is concerned about excluding the 230 kV lines without review by a planning authority or transmission operator because the fault magnitude on voltages above 200 kV are much higher than below 200 kV lines. BPA states that since actual power flows on systems above 200 kV are much higher, these systems have a higher risk for serious impacts on the interconnected transmission system.

138. Holland supports the exclusion of radial systems but contends that the phrase ''emanates from a single point of connection'' could be too narrowly interpreted. According to Holland, multiple buses within a single substation could be viewed as multiple points of connections. Holland believes that an entity whose connection emanates from a single substation should not be denied an exclusion solely because it connects to multiple buses at the single substation.

139. Consumers argues that the exclusion of 100 kV radial systems that only serve load exceeds the Commission's jurisdiction and the Seven Factor Test.[128] Consumers believes that exclusion E1(a) would exclude radials that only serve load and this phrase expands the Commission's jurisdiction by classifying 100 kV distribution systems that primarily serve load but could also have a secondary purpose. Consumers also argues that this exclusion is inconsistent with the Seven Factor Test which examines

[126] *E.g.,* Southern Companies, AEP, National Grid, TAPS, ISO New England, Barrick, IUU, and WPPC.

[127] SoCal Edison Comments at 5.

[128] Consumers cites to *Detroit Edison Co.* v. *FERC,* 334 F.3d 48 (D.C. Cir 2003) as support for its belief that the Commission cannot rewrite the FPA to exclude only facilities used exclusively in local distribution. *See* Consumers comments at 7.

whether local distribution facilities are ''primarily'' radial in character. Further, Consumers argues that the Commission should not adopt a rule that exceeds its jurisdiction or constitutes a collateral attack on the local distribution findings of the Seven Factor Test.

Commission Determination

140. The Commission agrees with NERC that the radial systems shown in figure 1 meet the definition of ''radial system'' in exclusion E1. This configuration would result in the 230 kV lines between transformers 1 and 2 to the two 230 kV lines, respectfully, being excluded from the bulk electric system. The Commission agrees with NERC and other commenters that both radial systems depicted in figure 1 would be subject to exclusion E1 condition (a) because they each only serve load.

141. Idaho Power, BPA and Anaheim raise concerns about protection system equipment and design, needed for analysis by the planning authority and transmission operator, while APPA states that all scenarios described by the Commission could create reliability concerns. Regarding these concerns, the Commission agrees with APPA that the exception process can be used to add to the bulk electric system specific configurations that pose a significant risk to the operation of the interconnected transmission network.

142. The Commission disagrees with Holland's interpretation that the phrase ''emanates from a single point of connection'' can refer to multiple buses. The phrase refers to a single point, and if there is more than one point of connection the configuration does not meet the radial system definition as stated in exclusion E1. NERC, in the standard development process, emphasized that radial systems cannot have multiple connections at 100 kV or higher. Networks that have multiple connections at 100 kV or higher may qualify under exclusion E3.[129]

143. The Commission also disagrees with Consumers that the exclusion of 100 kV radial systems that only serve load expands the Commission's jurisdiction by classifying 100 kV distribution systems that primarily serve load, but may also have a secondary purpose, as transmission. First, exclusion E1 condition (a) reflects the language contained in the current bulk electric system definition and therefore, is itself not an expansion from the existing definition. In addition, as NERC stated, application of the definition is a three-step process. In step 1, the core definition is used to establish the bright line of 100 kV, the overall demarcation point between bulk electric system and non-bulk electric system elements. Step 2, applying the specific inclusions, provides additional clarification for the purposes of identifying specific elements that are included in the bulk electric system. Step 3 is to evaluate specific situations for potential exclusion from the bulk electric system. Further, an entity may seek a case-specific exception if it believes that facilities with radial qualities that are not excluded pursuant to exclusion E1 or petition the Commission when seeking a determination whether a facility, otherwise included in the bulk electric system, is used in local distribution. Thus, merely applying the definition, and the inclusions or exclusions is not necessarily the end of the inquiry regarding whether an element is part of the bulk electric system.

c. Figure 2 and Condition (a) Radials Serving Only Load

NOPR Proposal

144. In the NOPR, the Commission requested comment on the scenario shown in figure 2 which shows a 115 kV loop, with the configuration emanating from two points of connection of 100 kV or higher. Specifically, the Commission requested comment on whether ''the 115 kV and 230 kV elements above Transformers 1 and 2 to the points of connection to the two 230 kV lines would be excluded from the bulk electric system pursuant to exclusion E1.'' [130] The Commission asked for comment on whether it is more appropriate to analyze figure 2 pursuant to the ''local network'' exclusion E3 and, if so, what if any elements operated at or above 100 kV would be excluded pursuant to exclusion E3.

[129] NERC BES Petition, Exhibit E, ''Complete Development Record of the Proposed Revised Definition of ''Bulk Electric System,'' Consideration of Comments on Initial Ballot—Definition of BES,'' at 259.

[130] NOPR, 139 FERC ¶ 61,247 at P 80.

Figure 2
Networked Configuration w/115 kV Loop

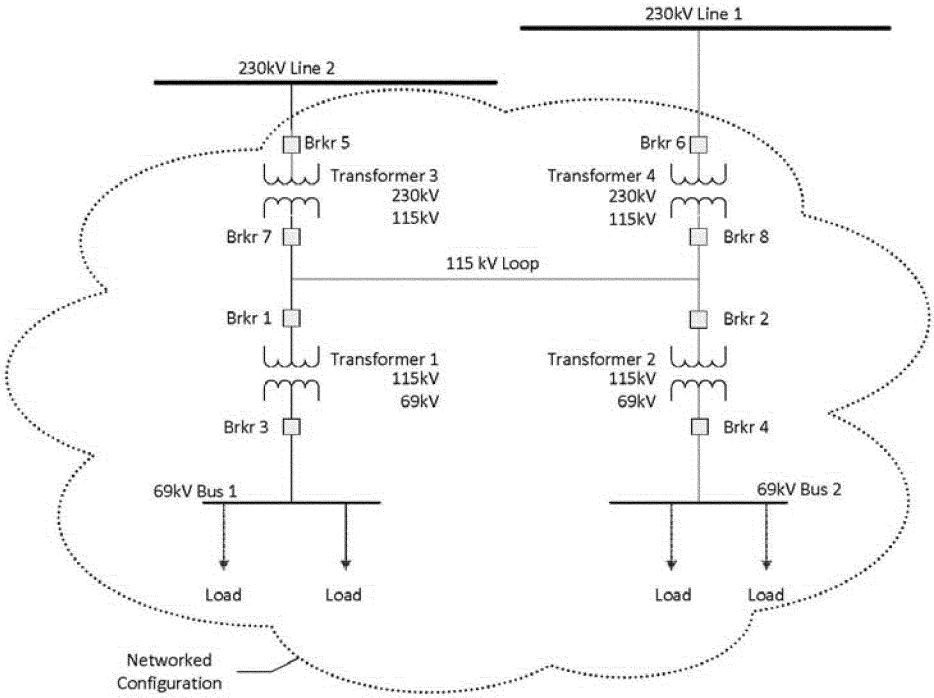

Comments

145. NERC states that figure 2 is a non-radial loop on the 115 kV system. According to NERC, the 115 kV elements above transformers 1 and 2 to the point of interconnection with lines 1 and 2 would not be eligible for exclusion E1 because they do not emanate from a single point of connection. NERC also states that it would be appropriate to evaluate figure 2 under exclusion E3 as a potential local network.[131] For such a candidate local network to qualify for exclusion, NERC states that additional technical analysis is needed to determine if all the exclusion E3 criteria are satisfied.[132] NERC asserts that without such a technical analysis, the 115 kV elements above transformers 1 and 2 should be considered part of the bulk electric system.

146. Likewise, Idaho Power, ITC Companies, and National Grid contend that the figure 2 configuration should be included in the bulk electric system. Southern Companies believe exclusion E1 may apply from the breakers down and that the configuration may belong to exclusion E3. AEP assumes that each of the facilities below the 115 kV loop shown in figure 2, and including breaker 1 and breaker 2, are radial and excluded pursuant to exclusion E1. According to AEP, the facilities above breakers 1 and 2 may be excluded pursuant to exclusion E3 depending on the circumstances.[133]

147. Valero states that the figure 2 configuration is very similar to common facilities configurations employed in many industrial facilities involving the interconnection of the industrial facility to the utility through two high voltage feeder lines that originate at different utility owned and operated substations. Valero requests that the Commission include in the final rule an additional exclusion that would ''categorically exclude from the [bulk electric system] any on-site high voltage switchyard facilities (less than 300 kV) owned by the industrial end-user where the predominant function of the facilities is to distribute electricity in an inward direction to the end-user's load.'' [134] WPPC argues that figure 2 shows both radial and network systems and that the system from the 115 kV loop upwards would be assessed under exclusion E3 and below that point would be assessed by exclusion E1.

Commission Determination

148. The Commission affirms NERC's statement that figure 2 is a non-radial loop and thus would not be eligible for exclusion E1 because it does not emanate from a single point of connection. The Commission agrees with commenters that the elements below the 115 kV loop should be assessed as two separate radial systems pursuant to exclusion E1. The remaining elements (the 115 kV loop, transformers 3 and 4 and the 230 kV tie lines above the transformers to the two 230 lines 1 and 2) should be assessed pursuant to exclusion E3 and if the configuration meets the criteria of exclusion E3, the elements could be excluded.

149. Regarding Valero's request for an additional exclusion if equipment owners' configurations cannot meet the exclusion E3 criteria, Valero can request that the elements be excluded through the exception process. The exception process allows equipment owners to request an exception regardless of the owner's registration status.

[131] *See also* Comments of NESCOE, BPA, Idaho Power, ITC Companies, and National Grid.

[132] *E.g.,* ISO New England Comments at 10, MISO Comments at 7.

[133] AEP Comments at 7.

[134] Valero Comments at 8.

d. Figure 3 and Condition (a) Radials Only Serving Load

NOPR Proposal

150. In the NOPR, the Commission agreed with NERC's proposal that radial systems only serving load and emanating from a single point of connection of 100 kV or higher should be excluded from the bulk electric system. However, the Commission expressed concern ''that the exclusion could allow elements operating at 100 kV or higher in a configuration that emanates from two or more points of connection ''to be deemed ''radial'' even though the configuration remains contiguous through elements that are operated below 100 kV.'' [135] Figure 3 in the NOPR illustrated this concern, and the Commission asked for comment on how to evaluate the configuration relative to the radial system definition. The Commission also requested comment on the appropriateness of examining elements below 100 kV to determine if the configuration meets exclusion E1, i.e., whether figure 3 depicts ''a system emanating from two points of connection at 230 kV and, therefore, the 230 kV elements above the transformers to the points of connection to the two 230 kV lines would not be eligible for the exclusion E1 notwithstanding the connection below 100 kV.'' [136]

Figure 3
Networked Configuration w/69 kV Loop

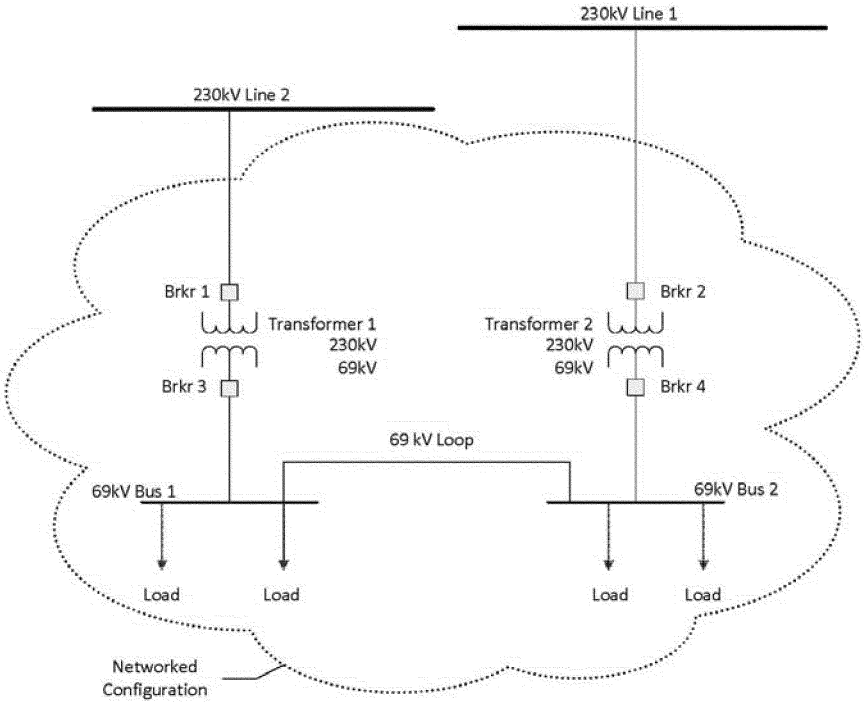

Comments

151. NERC disagrees with the Commission's characterization of figure 3 in the NOPR. NERC states that figure 3 does not depict a configuration with two points of 100 kV or higher or a system emanating from two points of connection at 230 kV. According to NERC, except for lines 1 and 2, all the other elements depicted in figure 3 are excluded from the bulk electric system. NERC explains that the elements between line 1 and transformer 2 and from line 2 to transformer 1 are excluded by exclusion E1(a) because ''each separate set of [e]lements [described above] is contiguous and emanate from a single point of connection of 100 kV or higher.'' [137] NERC states that the elements below the 69 kV side of transformers 1 and 2 are excluded from the definition because they are less than 100 kV, and transformers 1 and 2 are excluded because they ''bridge voltages of 69 kV and 230 kV'' and therefore do not meet inclusion I1.

152. NERC further explains that the focus of the definition of bulk electric system is on looped or networked connections at or above 100 kV. According to NERC, connections operated below 100 kV, generally do not carry significant parallel flow due to the higher impedance of lower voltage facilities. If such facilities are necessary for the reliable operation of the interconnected transmission network, NERC states that the exception process can be used to include such facilities.

153. Exelon agrees with NERC and explains that it has many connections similar to the one shown in figure 3 and provides a specific example where a 138 kV substation is fed by two radially connected 138 kV lines which in turn are connected through 40 MVA transformers to a 12 kV bus section. Exelon states that in its example the 40 MVA transformers cross bus sections so that if one of the 138 kV lines is out of service, each side of the 12 kV bus retains service. Exelon believes that due to the high impedance of the transformers, little energy flows between the buses in Exelon's

[135] NOPR, 139 FERC ¶ 61,247 at P 81.

[136] *Id.*

[137] NERC Comments at 19.

example.[138] Exelon states that owners and operators of these configurations would be required to go through the exception process.

154. Other commenters believe that the figure 3 configuration may not be eligible for exclusion E1. SoCal Edison explains that the 69 kV loop is not open and therefore is a parallel path to the 230 kV system. BPA, Alameda and WREA do not view the figure 3 system as eligible for exclusion E1 because the system is networked. Idaho Power states that the 230 kV lines would be included only if there is a protection system in place for the 230 kV lines. According to Idaho Power, the elements above the transformers in figure 3 would not be excluded from the bulk electric system. Idaho Power believes this configuration should be evaluated under exclusion E3.

Commission Determination

155. The Commission finds figure 3, which is identical to figure 5, is a networked configuration through a 69 kV loop and does not qualify for exclusion E1. The Commission also finds that, because the load in figure 3 can be served by either 230 kV line, it does not depict a ''radial system.'' However, the facilities below 100 kV may or may not be necessary for the operation of the interconnected transmission network, and this decision can be made case-by-case in the exception process. In other words, such facilities below 100 kV depicted in figure 3 would be excluded under the general threshold of the core definition unless found on a case-specific basis as necessary for the reliable operation of the interconnected transmission network. Thus, the Commission, while disagreeing with NERC's interpretation, does not propose to include the below 100 kV elements in figure 3 in the bulk electric system, unless determined otherwise in the exception process. Further, as we discuss below in connection with exclusion E3 and figure 5, while we find that the configuration shown in figures 3 and 5 would not be eligible for exclusion E1, we believe that such configurations should be eligible for exclusion E3 for local networks. However, exclusion E3 as written requires the candidate local network to be contiguous and above 100 kV, thus, the exclusion E3 language as written does not allow for figures 3 and 5 to be eligible for the local network exclusion because they are not contiguous *and* include facilities that are not above 100 kV. Therefore, we direct NERC to modify exclusion E3 to remove the 100 kV minimum operating voltage in the local network definition. This modification will enable configurations similar to figures 3 and 5 to be assessed for the local network exclusion. The Commission believes this modification, together with satisfying the criteria outlined in exclusion E3, will appropriately exclude local network configurations that are not necessary to the reliable operation of the interconnected transmission network.[139]

e. Condition (b)—Radials With Limited Generation and Condition (c)—Radials With Limited Generation and Load

NOPR Proposal

156. Exclusion E1, condition (b) describes generation connected to a radial system with no load, and condition (c) describes generation connected to a radial system with generation and load. In its petition, NERC stated that conditions (b) and (c) are ''intended to address the circumstances of small utilities (including municipal utilities and cooperatives).'' [140]

157. In the NOPR, the Commission requested comment regarding the specific circumstances that conditions (b) and (c) are intended to address. In addition, the Commission observed that the power generated on these radial systems would be ''delivered or injected to the bulk electric system and transported to other markets.'' [141] The Commission noted that it appeared that a line 100 kV or above connected to a generator with a capacity 75 MVA or below would not be included in the bulk electric system. The Commission requested comment on the appropriateness of excluding such radial facilities.

Comments

158. With respect to applicability to small utilities, NERC states that exclusion E1, conditions (b) and (c) are not intended solely for such entities. According to NERC, these conditions are intended to exclude radial systems that have limited benefit to the reliability of the interconnected transmission network. NERC states that the configurations described in exclusion E1(b) and (c) ''pose no reliability risk to the interconnected transmission network when the radial system is lost due to a failure or fault condition.'' [142]

159. NERC states that the basis for exclusion E1(b) ''is dependent on a single point of failure causing the radial system to separate'' from the bulk electric system, which will result in a limited loss of generation without an adverse reliability impact to the interconnected transmission network.'' [143] NERC explains that exclusion E1(c) addresses the installation of limited amounts of generation that are installed within a radial system and are intended to serve local load within that radial system.

160. In response to the Commission's question about the delivery or injection of power from the radial systems described in these exclusions, NERC states that because of the limitation of the generation in exclusion E1(b) and (c), the power generated on the radial system would be delivered to the embedded load within the radial system and injected into the bulk electric system in very limited quantities. NERC argues that subjecting the elements associated with this type of radial system to all the Reliability Standards has limited benefit to the reliability of the interconnected transmission network. NERC believes it is more appropriate to identify these elements through the ''the applicability in specific standards where a reliability benefit can be identified.'' [144]

161. A number of commenters agree with NERC.[145] Idaho Power states that the exclusion is appropriate if the generation connected to the radials is not relied on to meet reliability performance criteria on bulk electric system elements. Idaho Power indicates that it follows the WECC guidelines and

[138] Exelon Comments at 6. TAPS states that impedance is inversely proportional to the square of the voltage of the network and power flow is inversely proportional to the impedance. According to TAPS, impedance factors are very significant in limiting the amount of parallel path flows. TAPS Comments at 7.

[139] NERC and Exelon contend that looped or networked connections operating below 100 kV generally do not carry significant parallel flow because of higher impedance characteristics and thus need not be evaluated as part of a radial system. However, the Commission believes that excluding these configurations solely on the level of impedance does not consider other factors, including voltage, the system configuration, type of conductors, length of conductors, and proximity of the networked system in the interconnected transmission network. Regardless of our disagreement with NERC and Exelon regarding the consideration of impedance, however, as we discuss above, configurations such as those described by Exelon may be assessed for exclusion through exclusion E3, which apply criteria to determine whether such facilities are necessary for reliable operation of the interconnected transmission network. Accordingly, the inclusion or exclusion of such facilities is better determined through application of exclusion E3, or case-by-case in the exception process.

[140] NERC BES Petition at 19.

[141] NOPR, 139 FERC ¶ 61,247 at P 83.

[142] NERC Comments at 20.

[143] NERC Comments at 20.

[144] NERC Comments at 21–22.

[145] *E.g.* Idaho Power, National Grid, AEP, Hydro One, ISO New England, and BPA.

thresholds (10 MVA individually, 20 MVA aggregate) to determine the appropriateness of excluding the power from components from radial connected generation. Alameda contends that the radial systems in these exclusions have only a minor impact on the bulk electric system and that system planning and operation assessments must provide for reliable operation under N–1 contingency operations including loss of the exclusion E1(b) and (c) configurations. WPPC states that the generator thresholds in these conditions are a logical cut-off to separate radial systems with generation that is not likely to be meaningful to operation of the bulk electric system.

162. Anaheim urges the Commission to clarify that the presence of generation resources connected at voltages below 100 kV ''does not invalidate the availability of the radial exclusion for lines that are operated at greater than 100 kV unless the generating unit is actually connected to the higher voltage line.'' [146] PSEG Companies state there is confusion regarding the generation limits in exclusion E1(b) and (c) and in exclusion E3. They contend that it is not clear if the generation limit only applies to generators connected at 100 kV or higher. PSEG Companies also ask for clarification regarding the definition of the phrase ''non-retail generation.'' [147]

163. AEP does not believe that the three conditions of exclusion E1 would remove the generation connected to the radial system from the bulk electric system definition but states that the conditions may have the consequence of removing the radial line itself from the definition in error. According to AEP, this would be in cases of a 25 MVA generator (meeting I2 properties) but less than 75 MVA aggregate. AEP suggests that the conditions in (b) and (c) be revised to reference non-bulk electric system generation.[148]

Commission Determination

164. We approve exclusion E1 conditions (b) and (c). However, we direct NERC to implement exclusion E1 so that the exclusions for radial systems do not apply to tie-lines for bulk electric system generators identified in inclusion I2. If the generator is necessary for the operation of the interconnected transmission network, the Commission believes that it is generally appropriate to have the radial tie-line operating at or above 100 kV that delivers the generation to the bulk electric system included as well.

165. In general, we believe that it is appropriate to have the bulk electric system contiguous, without facilities or elements ''stranded'' or ''cut-off'' from the remainder of the bulk electric system as shown in the figure below. However, the contiguous quality of the bulk electric system is lost in exclusion E1, condition (b), because it removes from the bulk electric system the 100 kV or greater generator tie-line that connects the bulk electric system generator to the interconnected transmission network. Such tie-lines should be subject to appropriate Reliability Standards.

Radial System with BES Generation

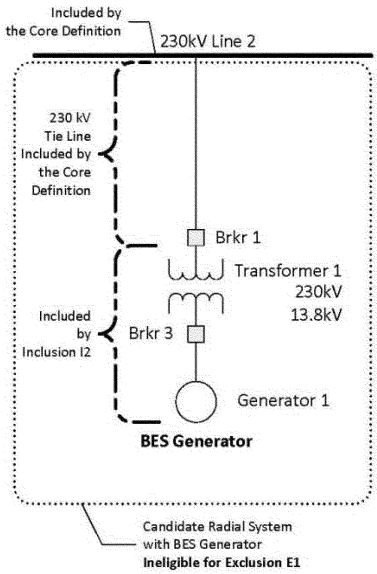

166. NERC explains that the exclusion of radial systems pursuant to conditions (b) and (c) is based on the premise that a single point of failure causing the radial system to separate from the bulk electric system, resulting in the loss of a limited amount of generation will not have an adverse reliability impact. However, there are other reliability concerns that NERC does not address. For example, both the radial line emanating from a generator and the portion of the bulk electric system to which it is connected have protective relays that require coordination to prevent the lines from tripping. The generator needs to coordinate the protective relays with transmission operators, otherwise there may not be adequate information to prevent a fault on the radial line from causing cascading outages on the bulk electric system. The Commission also notes that the phrase ''adverse reliability impact,'' which is defined in the NERC Glossary of Terms as ''the impact of an event that results in frequency-related instability; unplanned tripping of load or generation; or uncontrolled separation or cascading outages that affects a

[146] Anaheim Comments at 7.

[147] PSEG Comments at 3.

[148] AEP Comments at 5.

widespread area of the Interconnection,'' is an extreme result that should not occur from the loss of a single tie-line for any sized generator.[149] A single contingency that results in an ''adverse reliability impact'' violates planning and operating criteria in Commission approved Reliability Standards.[150] NERC also does not consider issues, such as the issue raised by Idaho Power, that the exclusion is appropriate if the generation connected to the radial system is not relied on to meet reliability performance criteria.

167. Some commenters suggest there is a conflict between the inclusion I2 and exclusion E1 because they believe that the 100 kV or greater tie-line and the generator should remain in the bulk electric system. We agree that exclusion E1 as written does not prevent the radial tie-line operating at or above 100 kV from the high side of the step-up transformer to the bulk electric system from being excluded while the generator and associated step-up transformer(s) remain included. Inclusion I2 depends on the status of the tie-line based on the core definition's 100 kV threshold to determine if a generator and its step-up transformers are part of the bulk electric system. Thus, this inclusion results in most bulk electric system generators having a contiguous connection to the interconnected transmission network. As noted above, we believe that it is generally appropriate to have the bulk electric system contiguous. Therefore, the Commission directs NERC to implement exclusion E1 so that the exclusion for radial systems does not apply to tie-lines for bulk electric system generators identified in inclusion I2. This directive provides consistent application of the entire definition by not allowing exclusion E1 to override the qualifying tie-lines pursuant to inclusion I2.

168. The Commission also rejects NERC's argument that subjecting the elements associated with this type of radial system to all the Reliability Standards has a limited benefit to the reliability of the interconnected transmission network. In cases of radial tie-lines for bulk electric system generators where the generator owner also owns the tie-line, NERC has exercised discretion, on a case-by-case basis, in determining which entities require registration as transmission owners/operators and identified sub-sets of applicable reliability standard requirements for these entities.[151] In other situations, such generator tie-lines may appropriately be considered an extension of the generation facility, which would not subject significant additional compliance obligations on the generator owner and/or operator.

169. In response to the question raised by PSEG Companies about whether the generation limit specified in exclusion E1(b) and (c) only applies to generators connected at 100 kV or higher, we note that exclusions E1(b) and (c) do not specify the generation connected to the radial system or local network to any voltage.

f. Normally Open Switches

NOPR Proposal

170. NERC included a note accompanying the description of exclusion E1 stating that ''[a] normally open switching device between radial systems, as depicted on prints or one-line diagrams for example, does not affect this exclusion.'' NERC drafted this note to address a common network configuration in which two separate sets of facilities that, each standing alone, would be recognized as radial systems but are connected by a switch that is set to the open position for reliability purposes. In its petition, NERC explained that these switches are installed by entities to provide greater reliability to their end-use customers. NERC also explained that ''a normally open switch'' will be identified in documents such as prints or one-line diagrams and that ''[t]he concept and usage of the 'normally open switch' in such configuration is well understood in the electric utility industry.''[152]

171. In the NOPR, the Commission requested comment on NERC's characterization and whether the phrase ''normally open'' is subject to interpretation or misunderstanding, or whether a ''normally open'' configuration is potentially difficult to oversee. The Commission also requested comment on the need of transmission operators or other functional entities to study the system impacts of the closing of a ''normally open'' switch, or to take other steps to ensure awareness of the impacts of the loop that is created by the closing of the switch if the closed loop is not included as part of the bulk electric system.

Comments

172. NERC explains that the term ''normally opened'' is well understood and commonly used in industry for a variety of reasons including public and personnel safety. NERC also explains that the purpose of recognizing a normally open switch in the definition is to preserve the bright-line so that the facilities can be characterized as they are planned to be operated which avoids the need to constantly reclassify elements to adjust to the changing operating conditions that occur on the system. NERC believes that a normally open switch is not difficult to oversee.

173. Nearly all commenters that addressed this issue agree with NERC's positions. NRECA highlights NERC's explanation that the configuration is so common that to write the definition to include radial systems connected by a normally open switch, with the caveat that entities can request an exception, would result in a flood of exception requests. Steel Manufacturers Association points out that such a switch can make a secondary connection point available to a large industrial load when needed to improve service reliability and continuity. Consumers Energy states that such switches would only be closed during emergency conditions and an entity in that instance would follow contingency plans and ensure that a proper study is performed on a normally open switch that is closed due to the emergency to avoid related equipment failures. TAPS agrees with NERC and notes that such switches are marked as normally open on one line diagrams.

174. PSEG Companies state that in effect the switch is irrelevant because if the normally open switch is open the systems are radial and therefore excluded and when the switch is closed the radial systems are also excluded for the same reasons figure 3 facilities should be excluded. Alameda submits it documents a normally open switch in operational diagrams and SCADA applications and its use is coordinated in advance with its transmission operator. Alameda also states that the system impacts of closing a normally open switch do not need to be required to be studied since it is the operational experience and documentation of such switch that is most important.

175. G&T Cooperatives state that some operational studies would be useful if there is an upcoming operational decision to close the normally open switch that could parallel the bulk electric system. However, G&T Cooperatives explain that the study would be used to ensure that the system can operate with the switch closed without inadvertently tripping one of the source breakers. G&T Cooperatives explain that a normally open switch

[149] *See* the NERC Glossary of Terms at *http://www.nerc.com/files/Glossary_of_Terms.pdf.*

[150] *See, e.g.,* Reliability Standards, TPL–002–0b and IRO–004–2.

[151] *E.g., New Harquahala Generating Company, LLC,* 123 FERC ¶ 61,173, *order on clarification,* 123 FERC ¶ 61,311 (2008).

[152] NERC BES Petition at 19.

would not need to be modeled into any real-time model or contingency analysis, nor would it require the interconnecting radial systems to be incorporated into the bulk electric system, where such conditions are managed through quick changes to the equivalence bus loads or generation capacities. Similarly, TAPS states that closing a normally open switch does not have an impact on the system that needs to be studied because it is only close to change a down stream path on a temporary basis and does not create a loop.

Commission Determination

176. Upon consideration of comments, we are persuaded that the concept of a normally open switch is well understood, common and not difficult to oversee. We accept NERC's explanation that recognizing a normally open switch in the definition will preserve the bright-line so that the facilities can be characterized as they are planned to be operated and avoids the need to constantly reclassify elements to adjust to the changing operating conditions that occur on the system.

177. With regard to the Commission's question concerning the need to study the system impacts of the closing of a ''normally open'' switch, at this time we will not require them to be studied. We are persuaded that the operational experience and documentation of such switch is most important and, thus, we decline to require additional studies.

7. Exclusion E2 (Behind the Meter Generation)

NOPR Proposal

178. NERC stated in its petition that the wording of exclusion E2 is extracted from the Statement of Compliance Registry Criteria.[153] In the NOPR, the Commission stated that the exclusion of ''[a] generating unit or multiple generating units on the customer's side of the retail meter * * *'' was an appropriate exclusion that provides additional clarity and granularity to the definition of bulk electric system.[154] While the Commission did not ask specific questions about exclusion E2, several commenters expressed support for the inclusion, while others stated concerns with the exclusion.

Comments

179. NERC and EEI agree with the Commission that the exclusion provides additional clarity. ELCON notes that such configurations are commonly employed by industrial users of electricity, and they do not affect in any significant way the bulk power system. On the other hand, ISO New England believes that exclusion E2 should be eliminated because it is contrary to the reliability of the bulk electric system. According to ISO New England, a 400 MW generator which is behind the meter with a 400 MW load could be excluded even though it could have a significant impact on the performance of the bulk electric system. ISO New England states that the owner of the generator in this example would not need to provide generator stability modeling information nor abide by the many normally applicable Reliability Standards. MISO believes that the exclusion could encourage entities to move generation capacity behind the meter which could adversely impact the bulk electric system.

180. PSEG Companies state that exclusion E2 could exclude generation included in inclusion I2. For example, PSEG Companies contends that, if a single 200 MVA behind-the-meter generator is connected to the bulk electric system at 100 kV or higher, the net capacity provided to the bulk electric system does not exceed 75 MVA and the generator has standby, backup, and maintenance services, under exclusion E2 the generator would be excluded from the bulk electric system, but it would be included pursuant to inclusion I2.[155]

181. Other commenters, such as Barrick and the IUU, believe additional clarification is needed for the terms ''retail meter'' and ''net capacity.'' Specifically, they question what the capacity is ''net'' of or whether it means the sum of flows at all points of connection to the bulk electric system. They also question whether ''net'' means the capacity of a generator that is made available for use by someone other than an owner of the generator or capacity less parasitic load only.

182. Barrick and IUU believe there is more than one use for the term ''retail meter,'' and it is not clear whether all situations are covered by the use in the proposed exclusion E2. Barrick proposes that the term ''retail meter'' should include an end-user's meter at an end-user's generator when that meter is used to measure the end-user's generation for consumption.

Commission Determination

183. We find that exclusion E2 provides additional clarity to the definition of bulk electric system, and we disagree that exclusion E2 is contrary to the reliability of the bulk electric system. We agree with ELCON that such configurations are commonly employed by industrial users of electricity. Indeed, this exclusion is similar to the exclusion for such facilities in NERC's Registry Criteria.[156] With regard to ISO New England's and PSEG Companies specific examples, to the extent such scenario exists, they may be eligible for inclusion or exclusion through use of the exception process.

184. We decline to define the additional terms cited by commenters, such as Barrick and the IUU, who believe additional clarification is needed for the terms ''retail meter'' and ''net capacity.'' These terms are in common use in the electric power industry. Therefore, we do not see a need to adopt a formal definition.

8. Exclusion E3 (Local Networks)

NOPR Proposal

185. NERC's proposed exclusion E3 defines the term ''local networks'' as:

> A group of contiguous transmission Elements operated at or above 100 kV but less than 300 kV that distribute power to Load rather than transfer bulk-power across the interconnected system. LN's emanate from multiple points of connection at 100 kV or higher to improve the level of service to retail customer Load and not to accommodate bulk-power transfer across the interconnected system.

Exclusion E3 also identifies three criteria that must be satisfied for the exclusion to apply: (a) Limit on connected generation to 75 MVA aggregate capacity of non-retail generation (gross nameplate rating); (b) power flows only into the local network and does not transfer through the local network; and (c) the local network is not part of a flowgate or transfer path.

186. In the NOPR, the Commission requested comment on: (1) Whether generation resources are excluded by this exclusion; (2) how the exclusion applies to a looped lower voltage system; (3) whether the 300 kV ceiling is appropriate for the application of the exclusion; and (4) whether the prohibition for generation produced inside a local network is not transporting power to other markets outside the local network applies in both normal and emergency operating conditions.[157] The Commission also sought further explanation regarding the design and technical justification of a local network. These issues are

[153] NERC BES Petition at 22.

[154] NOPR, 139 FERC ¶ 61,247 at P 88.

[155] PSEG Comments at 14.

[156] NERC Statement of Compliance Registry Criteria, section III.c.4.

[157] NOPR, 139 FERC ¶ 61,247 at P 89.

discussed in detail in the following sections.

a. Local Network Design and Technical Justification

NOPR Proposal

187. In the NOPR, the Commission requested explanation and comment on the statement in NERC's petition that ''neither will the local network's separation or retirement diminish the reliability of the interconnected electric transmission network.'' [158] In its petition, NERC stated that the design and operation of local networks is such that at the point of connection with the interconnected transmission network is similar to that of a radial facility, in particular that power always flows in the direction from the interconnected transmission network into the local network.[159] Further, according to NERC, ''[l]ocal networks provide local electrical distribution service and are not planned, designed or operated to benefit or support the balance of the interconnected transmission network.'' [160]

188. In the NOPR, the Commission observed that, while a radial facility emanates from one point of connection to the interconnected transmission network, a local network by definition has multiple points of connection to the interconnected transmission network. Thus, regarding a local network, a contingency situation may arise where one of the multiple connections to the interconnected transmission network separates, while other local network connections maintain connectivity with the bulk electric system. Accordingly, the Commission requested comments to better understand how an entity with a candidate local network would analyze such contingencies to determine potential impacts to the reliable operation of the interconnected transmission network.

Comments

189. EEI, MISO and other commenters generally support exclusion E3.[161] With respect to the issue raised by the Commission regarding how an entity's local network separation will not diminish the reliability of the interconnected transmission network, NERC explains that the reliability of the interconnected transmission network is not impacted by the existence or absence of the local network. NERC maintains that excludable facilities under exclusion E3 will naturally satisfy this principle because the exclusion E3 conditions were crafted in such a way to ensure reliability is not adversely impacted by the disconnection of the local network. While specific analyses are not necessary to support exclusion of facilities under exclusion E3, NERC states that transmission operators or other functional entities need to be aware of the change of status of all devices on the system and the impact to the system from device changes. According to NERC, exclusion of a local network does not obviate the transmission operator or other functional entity from the responsibility to assess the system impact on any bulk electric system facility due to the separation of one local network connection while the remainder of the local network remains connected with the bulk electric system.[162]

190. TAPS agrees with NERC stating ''sophisticated engineering analysis should not be needed to determine the applicability of [i]nclusions and [e]xclusions.'' [163] Likewise, WREA agrees with NERC's assertion that the entity with a local network does not need to analyze local network contingencies since this analysis is already made by the transmission planner and transmission operator responsible for the bulk electric system facilities feeding the local network. Regarding the transmission planner responsibilities, WREA states the NERC Reliability Standard TPL–002 requires the transmission planner to study N–1 contingencies and prepare plans for reliable operation. WREA further explains that the transmission operator is required to plan to meet unscheduled changes in system configuration pursuant to Reliability Standard TOP–002, R6 and ''if there are non-[bulk electric system] facilities that are significant, that have not been properly represented in a [transmission operator's] models, [then] when the [transmission operator] performs its required model accuracy validation (TOP–002, R19), the [transmission operator] would observe a modeling inconsistency and would be able to take steps to correct the modeling error.'' [164]

191. AEP advocates for a baseline or cut-off point, which would be determined by the size (in MW) of the local network. Idaho Power believes that the statement means that total separation or loss of the local network elements does not cause a reliability performance impact on the remaining bulk electric system elements. Idaho Power explains that it would analyze such contingencies by evaluating overload levels and voltage performance impacts on the remaining bulk electric system elements as well as overload levels and voltage performance on the remaining local network elements.

192. Southern Companies state that such a contingency would be incorporated into planning studies regardless of whether the local network was part of the bulk electric system.[165] BPA believes that before a candidate local network is excluded, it must be evaluated by the impacted balancing authority, transmission operator and planning authority to ensure the integrity of the bulk grid is not compromised.[166]

Commission Determination

193. The Commission approves exclusion E3. The Commission accepts NERC's explanation about the statement that ''neither will the local network's separation or retirement diminish the reliability of the interconnected transmission network.'' The Commission also accepts NERC's comments relating to how an entity with a candidate local network would analyze such contingencies to determine potential impacts to the reliable operation of the interconnected transmission network. In particular, the Commission agrees that the exclusion of a local network does not obviate the transmission operator or other functional entity from the responsibility to assess the system impact of separating one local network connection while the remainder of the local network remains connected with the bulk electric system. We will not direct NERC to modify the provision as suggested by AEP and BPA. Rather, as NERC indicates, AEP and BPA may raise these suggestions with NERC in the Phase 2 development effort.

b. Figure 5, Contiguous Transmission Elements and the 100 kV Lower Limit

194. Exclusion E3 defines local networks as ''[a] group of contiguous transmission Elements operated at or above 100 kV but less than 300 kV that distribute power to Load rather than transfer bulk-power across the interconnected system.'' While the local network exclusion applies to contiguous transmission elements operating at a minimum of 100 kV, the Commission stated in the NOPR that it is unclear how the exclusion applies to a looped

[158] NERC BES Petition, Exhibit G at 2. (Local Network Technical Justification).

[159] NERC BES Petition at 22.

[160] *Id.*

[161] *E.g.,* NRECA, ELCON, BPA, and G&T Cooperatives.

[162] NERC Comments at 26.

[163] TAPS Comments at 9.

[164] WREA Comments at 8–9.

[165] Southern Companies Comments at 13.

[166] BPA Comments at 7–8.

lower voltage system. The Commission provided an example of its concern depicted in figure 5 in the NOPR which shows a 69 kV looped system emanating from two points of connection at 100 kV or higher.

Figure 5
Networked Configuration w/69 kV Loop

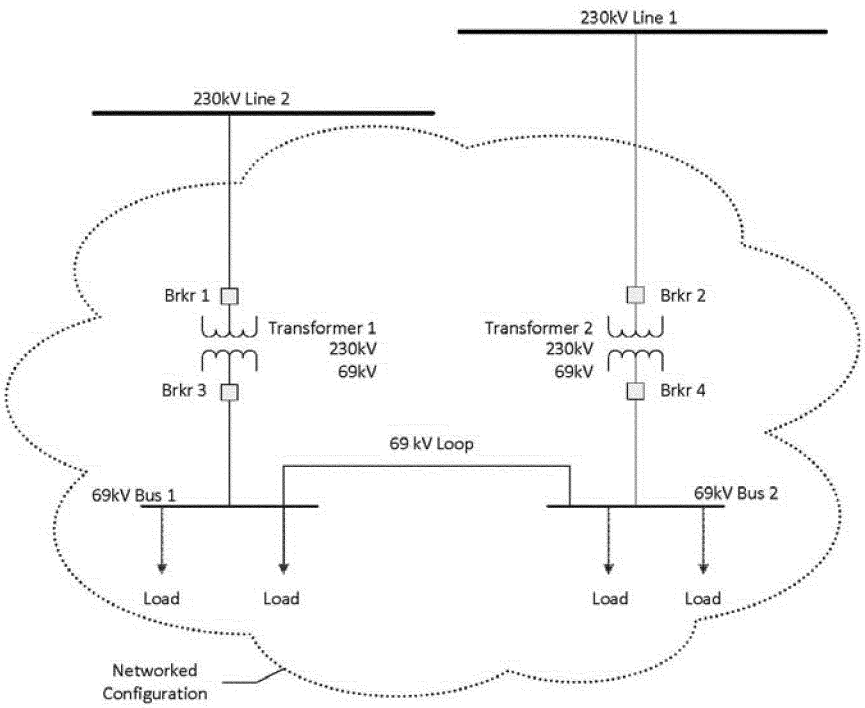

195. In the NOPR, the Commission stated that figure 5 depicts a group of elements that are contiguous through a 69 kV loop and requested comment whether the configuration in figure 5 qualifies as a local network and, in particular, whether the configuration satisfies the conditions that a local network be contiguous and operated at or above 100 kV.

Comments

196. NERC views figure 5 the same as figure 3—as a looped system below 100 kV—that is not considered under this exclusion because the elements below 100 kV are presumed to be not part of the bulk electric system.[167] NERC maintains that, if it is determined that the sub-100 kV looped system is necessary for the reliable operation of the interconnected transmission network, the exception process may be utilized to include the appropriate elements. NERC states that figure 5 depicts two separate and distinct groups of elements that each emanate from a single point of interconnection at 230 kV and only serve load. Accordingly, NERC states that 230 kV lines 1 and 2 are included in the bulk electric system with the only other included elements being the lines extending from lines 1 and 2. However, according to NERC, the elements between 230 kV line 1 and transformer 2 and between 230 kV line 2 and transformer 1 are each subject to exclusion E1(a) because each separate set of elements is contiguous and emanate from a single point of connection of 100 kV or higher. NERC asserts that the elements below the 69 kV side of transformers 1 and 2 are excluded because they are less than 100 kV. NERC explains that transformers 1 and 2 are excluded because they bridge voltages of 69 kV and 230 kV and therefore, inclusion I1 is not applicable because a transformer must have two terminals over 100 kV to qualify for inclusion I1. According to NERC, the definition should focus on looped or networked connections at 100 kV or greater because such connections, when operated below 100 kV, generally do not carry significant parallel flow because of the higher impedance associated with lower voltage facilities.[168]

197. Exelon states that the clear intent of the definition is that configurations such as shown in figure 5 are radial systems subject to exclusion E1 (radial systems). According to Exelon, had this not been the intent of exclusion E1, exclusion E3 would have allowed for a local network where the tie was below 100 kV to avoid a reliability gap. Exelon believes that the configuration shown in figure 5, which is identical to figure 3, does not qualify as a local network within the terms of exclusion E3 and supports NERC's view that figure 5 represents two radial systems that qualify under exclusion E1. Exelon cautions that, if the Commission determines that the systems depicted in figure 5 do not qualify under exclusion E1 because of the low voltage tie and does not qualify under exclusion E3 because the tie is at low voltage and not a 100 kV or above, such a decision would leave a gap under which a substantial number of facilities that are not part of the bulk electric system

[167] Figure 5 and figure 3 set forth in the NOPR are identical configurations.

[168] NERC Comments at 27–28.

would be classified as such. Exelon states that it would have to go through the separate exception process for dozens of substations, at great cost and for no useful purpose. Exelon states that the Commission should clarify that the configuration shown in figures 3 and 5 qualifies as a radial system and is excluded pursuant to exclusion E1.

198. Other commenters disagree with NERC's position. Idaho Power believes the network configuration with a 69 kV loop belongs to a local network category pursuant to exclusion E3 and that these types of networks should be studied to identify if there is any resulting voltage, overload, or stability violation that could propagate and impact the reliability of the system. Idaho Power believes that the 69 kV loop can tie the 230 kV systems together; therefore, outages in the 230 kV system could cause loop flow in the 69 kV system. According to Idaho Power, planning studies would have to be performed to determine the amount of loop flow and whether the loop flow could lead to outages on the 69 kV system, resulting in further impact to the bulk electric system.[169] WREA also notes figure 5 is the same as figure 3 and states that the 230 kV elements described in the figure would not qualify for the radial system exclusion E1 because the 230 kV elements are networked via facilities less than 100 kV. WREA concludes the elements above 100 kV in the figure might qualify for the local network exclusion and the below 100 kV facilities in this configuration are non-bulk electric system on the basis of the core definition unless the facilities are included via the exception process.[170] AEP believes that figure 5 could be considered for exclusion E3, provided that it is understood that at some point on the local network, the network could be of the size that would have a potential impact on the bulk electric system and would still need to meet the parameters of exclusion E3.[171]

Commission Determination

199. As discussed above, the Commission is directing a modification to exclusion E3 to better capture local networks like those depicted in figure 5. The Commission notes that Exelon believes that the configuration shown in figure 5, which is identical to figure 3, does not qualify as a local network within the terms of exclusion E3. While figures 3 and 5 are a networked configuration through a 69 kV loop, they do not qualify for the local network exclusion because exclusion E3 defines local networks as ''[a] group of contiguous transmission Elements operated at or above 100 kV but less than 300 kV that distribute power to Load rather than transfer bulk-power across the interconnected system.'' The configuration in figure 5 includes elements that are below 100 kV, and does not have contiguous elements operating at or above 100 kV but less than 300 kV. As noted above, while the Commission finds that these configurations should not be eligible for exclusion E1, we believe that they should be eligible for the local network exclusion. Therefore, we direct NERC to modify exclusion E3 to remove the 100 kV minimum operating voltage in the local network definition. Within 30 days of the effective date of this Final Rule, we direct NERC to submit a schedule outlining how and when it will make the modification to the definition.

c. 300 kV Cap

NOPR Proposal

200. NERC explained the selection of a 300 kV cap for the applicability of an exclusion for a local network was based upon recent NERC standards development work in Project 2006–02 ''Assess Transmission Future Needs and Develop Transmission Plans'' which sets a voltage level of 300 kV to differentiate extra high voltage (EHV) facilities from high voltage facilities acting as a threshold to distinguish between expected system performance criteria.[172] In the NOPR, the Commission noted that NERC provided an example of the electrical interaction between a typical local network and the bulk electric system which depicted a local network operating at 115 kV. However, the Commission observed that NERC did not provide examples of a local network operating within the 200 to 300 kV range. The Commission expressed concern whether the 300 kV ceiling is appropriate and reflects actual system configurations that serve local distribution, the stated purpose of the local network exclusion. Thus, the Commission requested comment whether the 300 kV ceiling is appropriate for the application of exclusion E3 and requested examples of systems between 200 and 300 kV that would qualify for this exclusion.

Comments

201. NERC asserts that the 300 kV cap is appropriate. NERC reiterates that the voltage cap is consistent with the distinction being made between extra high voltage and high voltage in the Reliability Standard TPL–001–2. NERC adds that the important attributes of a local network are the limit on capacity of connected non-retail generation, prohibition of power flow out of, or through, the local network, and prohibition of local networks containing flowgates or major transfer paths. NERC maintains that these attributes, rather than the operating voltage of the local network facilities, assure that local networks do not impact reliability of the interconnected transmission network.

202. Most commenters agree that the 300 kV threshold is appropriate.[173] With respect to the Commission's request for examples of systems between 200 and 300 kV that would qualify for this exclusion, ICNU states that, one of its members operates a large industrial facility that takes service from the bulk electric system from two transformers, both of which operate at 230 kV on the high side, but step down to 13.5 kV for distribution within the complex. According to ICNU, this industrial plant serves no reliability function and serves only the retail load, but if the ceiling for exclusion E3 were lowered to 200 kV, this network potentially would not be excluded because it contains some elements operating between 200–300 kV. ICNU believes that the function of a local network, rather than its voltage, is the critical factor in excluding it from the bulk electric system and therefore, recommends a local network exclusion based on function, not voltage. Nonetheless, to the extent a ceiling is deemed necessary, ICNU states that the 300 kV threshold is appropriate.

203. WPPC supports the 300 kV ceiling and WPPC states that the ceiling reflect industry's extensive use of 115–230 kV system to provide distribution service through a local network. WPPC points out that in low density areas it is more economical to serve load using one 230 kV network rather than four 69 kV networks. WPPC adds that many 55 and 69 kV networks that serve towns and cities have been upgraded to 115 or 230 kV for economic, technical and environmental reasons, but raising the voltage does not change their function.

204. In contrast, BPA, Hydro One, and WREA express concern regarding the 300 kV cap. BPA states that the 300 kV ceiling may not ''reflect[] actual system configurations that serve local distribution, the stated purpose of the local network exclusion.'' [174] BPA believes that exclusion E3 should not apply to any facility above 200 kV, without appropriate review, analysis,

[169] Idaho Power Comments at 11.

[170] WREA Comments at 9.

[171] AEP Comments at 10.

[172] NERC BES Petition at 23.

[173] *E.g.* National Grid, AEP, ICNU, and WPPC.

[174] BPA Comments at 8.

and concurrence, from the impacted transmission operator, planning authority, and reliability coordinator. BPA states that fault magnitudes on systems between 200 kV and 300 kV are much higher than fault magnitudes on systems operated below 200 kV. According to BPA, these systems have a much higher potential for serious impacts than networks operating below 200 kV if something fails to operate properly, including cascading outages, transient instability, and post transient voltage instability.

205. Hydro One believes that the 300 kV cap associated with the applicability of exclusion E3 is not justifiable on technical grounds, and submits that certain systems with greater than 300 kV should be able to qualify for exclusion E3 based on their own merits. Hydro One states that a radial or a local network below 300 kV can have as much or more impact on the reliability of the interconnected transmission network than a local network operating at 300 kV or above depending upon its location and configuration. WREA also disagrees with the 300 kV ceiling and recommends that the Commission delete this limitation entirely.

Commission Determination

206. The Commission approves the 300 kV voltage threshold for local networks for the initial implementation of the definition. While we approve the 300 kV threshold, the limited number of examples provided for 200–300 kV systems cause us to seek additional information. Thus, following implementation when actual exclusion data is available, the Commission directs NERC to submit a compliance filing within one year of the implementation date identifying in sufficient detail the types of local network configurations that have been excluded from the bulk electric system under this exclusion. This will assist us in better understanding the type and magnitude of systems that fall into above 200 kV category.

d. Criterion (a)—Limits on Connected Generation

NOPR Proposal

207. Exclusion E3 criterion (a) provides that the local network and its underlying elements do not include the blackstart resources identified in inclusion I3 and do not have an aggregate capacity of non-retail generation greater than 75 MVA gross nameplate rating. In addition, criterion (a) does not limit the amount of generation besides ''non-retail generation'' connected to the local network. The Commission stated in the NOPR that it agrees with NERC that ''local networks'' do not include blackstart resources and agrees with the limits on the connected generation imposed by this exclusion. The Commission also stated that similar to the discussion of the definition of ''radial systems'' in exclusion E1, the exclusion E3 local network exclusion applies to ''transmission Elements,'' but does not exclude generation resources connected to a local network that otherwise satisfy inclusion I2.

Comments

208. NERC concurs with the Commission's statement that ''local networks'' do not include blackstart resources and agrees with the limits on the connected generation imposed by this exclusion. NERC, EEI, Alameda, Hydro One, and WREA state that, whether or not generation is included in the bulk electric system is determined by inclusions I2 through I4 and exclusion E2. In addition, NERC confirms that exclusion E3 does not exclude generation resources.

209. In contrast, some commenters are concerned about allowing generators identified in inclusion I2 to be connected to local networks. Idaho Power states that it is not appropriate to exclude a local network if it contains generation that would normally be included in the bulk electric system through inclusion I2.[175] PSEG Companies states that ''there is confusion created by the fact that generators included in the [bulk electric system] definition per [inclusion] I2 are at the same time excluded under [exclusions] E2 and E3.'' [176] According to PSEG Companies, a generator cannot be included under one provision of the bulk electric system definition and excluded under another provision and that this issue requires clarification and, once clarified, the bulk electric system definition needs to be modified accordingly.

210. Some commenters seek clarification of exclusion E3 criterion (a) regarding the term ''non-retail.'' [177] Barrick and the IUU raise several questions about exclusion E3. First, they claim that the phrase ''not * * * non-retail generation'' is unclear and question whether it means generation used for retail. They also question whether exclusion E3 excludes generation resources for an owner's own use or generation used for wholesale. They also ask how the term ''non-retail'' relates to ''net capacity.''

211. While Holland supports the exclusion of local networks from the bulk electric system, Holland argues that criteria (a) and (b) should be eliminated because they limit the amount of connected generation, even where the connected generation is distributed locally. Holland states that exclusion E3(a) improperly maintains the aggregate 75 MVA limit for connected generation. Holland believes this limit is inconsistent with the concept of a local network and should be removed. Holland explains that if the local network does not accommodate bulk power transfer across the interconnected system, then the amount of generation that exists and is distributed within that system, regardless of size, is distributed and consumed locally, and is therefore beyond the scope of FPA Section 215. Holland maintains that, if the Commission does not remove exclusion E3(a) in its entirety, it should require the limitation to be based on the net of the local network's total load, rather than the gross nameplate rating.

212. NESCOE contends that three conditions in exclusion E3 would unnecessarily include some New England networks in the bulk electric system without any clear reliability benefit. In particular, NESCOE states that the limits on connected generation should be raised to 300 MVA instead of 75 MVA, stating that the northeast portion of the eastern interconnection defines a 1200 MVA loss of source as the largest contingency to which the control area is designed to operate. Therefore, NESCOE believes that 25 percent of that contingency at 300 MVA falls well within typical loss of source expectations for the northeast. Alameda suggests that the Commission raise the connected generation limitation for local network exclusions to 150 MVA. According to Alameda, since the local network is comparable to two radials, limiting a local network to 75 MVA could result in entities choosing to operate two less reliable radial systems, each with 75 MVA of generation, rather than one local network with 150 MVA of generation to avoid a designation as bulk electric system for their local network.

Commission Determination

213. We find that the local network exclusion only applies to ''transmission Elements'' and does not allow the exclusion of generation resources otherwise included in the bulk electric system pursuant to inclusion I2, as

[175] Idaho Power Comments at 10.

[176] PSEG Comments at 11.

[177] *E.g.,* Barrick, IUU, and PSEG.

discussed above in our determination regarding exclusion E1.

214. Further, as discussed above regarding exclusion E1, the Commission agrees with Idaho Power, PSEG Companies, SmartSenseCom, and AEP that tie-lines for generators identified in the inclusion I2 should not qualify for exclusion as radial systems or local networks. Rather the tie-lines can be considered for exclusion under NERC's exception process. Accordingly, consistent with the Commission's directive discussed above regarding exclusion E1, the Commission directs NERC to implement exclusion E3 so that the exclusion for local networks does not apply to bulk electric system generator tie-lines operated at or above 100 kV as shown in the figure below.

115 kV Loop with BES Generation

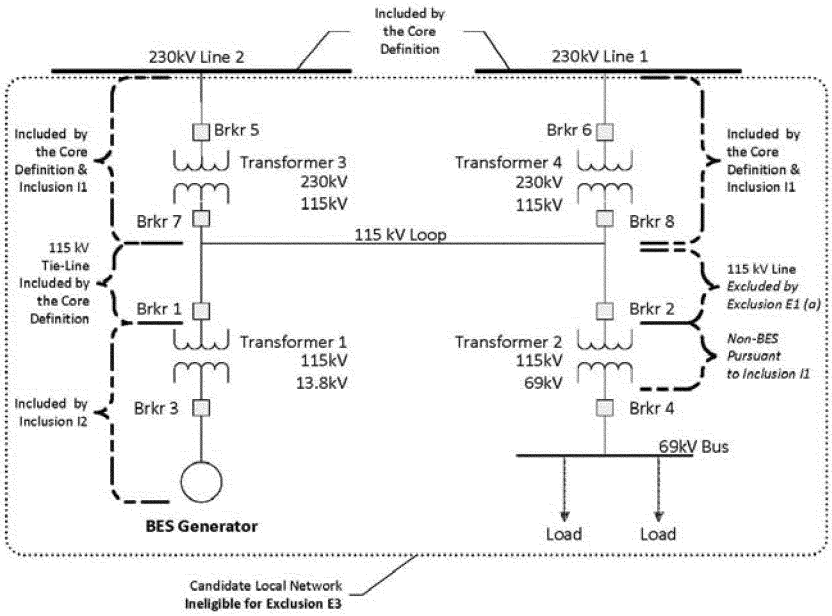

215. In response to Barrick's and IUU's requests for clarification, we decline to clarify the terms/phrases ''non-retail,'' ''gross plant/facility,'' ''not necessary,'' ''aggregate,'' ''net capacity,'' and ''retail meter.'' We believe the terms/phrases are sufficiently clear. However, Barrick and IUU may pursue further clarification from NERC in an appropriate forum such as NERC's Phase 2 project.

216. With regard to the comments of Holland, NESCOE and Alameda, we will not direct any change in the connected generation limitation for the local network exclusion. The limit on connected generation within the local network is consistent with the existing threshold above which a generating plant in aggregate becomes subject to registration under the NERC Registry Criteria. Entities may avail themselves of the exception process to exclude a local network that otherwise does not qualify pursuant to exclusion E3.

e. Criterion (b)—Power Flows Only Into the Local Network

NOPR Proposal

217. Exclusion E3 criterion (b) specifies that, to qualify for the exclusion, power can only flow into the local network and the local network does not transfer energy originating outside the local network for delivery through the local network. The Commission noted in the NOPR that, pursuant to criterion (b), generation produced inside a local network is not transporting power to other markets outside the local network. The Commission stated in the NOPR that it understands that criterion (b) applies in both normal and emergency operating conditions.[178]

Comments

218. NERC confirms, and TAPS, Idaho Power and others concur with the Commission's understanding that, pursuant to criterion (b), generation produced inside a local network is not transporting power to other markets outside the local network. NERC and other commenters also agree that criterion (b) applies in both normal and emergency operating conditions.

219. NERC states that prohibitions on outbound power flow and transportation of power to other markets beyond the local network apply in all conditions, both normal and contingent, and will eliminate the exclusion of facilities which may contribute power flow into the bulk electric system under contingent or unusual circumstances. According to NERC, basing the determination solely on normal conditions could lead to inconsistent application of this exclusion and would introduce subjectivity into the application of the definition.

220. Duke Energy agrees with NERC's comment that prohibitions on outbound power flow beyond the local network apply in ''both normal and contingent conditions,'' but believes that ''contingent'' should be further clarified as limited to N–1 contingencies for the bright line definition. Idaho Power also agrees, and comments that additional clarification is needed to define whether the meaning of ''emergency conditions'' includes contingencies within the local network itself. In contrast, Southern Companies states that criterion (b) would apply in normal but not emergency operating conditions. MISO cautions against precluding local

[178] *See* NOPR, 139 FERC ¶ 61,247 at P 98 (citing NERC BES Petition, Exh. E at 59 (''The Commission directed NERC to revise its BES definition to ensure that the definition encompasses all Facilities necessary for operating an interconnected electric Transmission network. The SDT interprets this to include operation under both normal and Emergency conditions * * *.'')).

networks from sending electricity to the transmission system in emergency conditions when doing so could improve the availability of electricity.

221. Portland notes that the application of criterion (b) in both normal and emergency operating conditions is similar to one element of the Seven Factor Test that states that power rarely if ever flows out. Portland suggests that the Commission should clarify the relationship between the Seven Factor Test and the local distribution exception in the reliability regulatory context.

222. Alameda believes that the power flow prohibition should apply only where the flow from the local network is necessary for the reliable operation of the interconnected transmission network. Alameda contends that these conditions would typically apply during peak or near-peak operating conditions and that it would be inappropriate to include a local network in the bulk electric system because generation flowed outside the local network only under off peak conditions when these flows were not vital to reliability. Alameda suggests that the power flow prohibition be modified to allow flows of less than 75 MVA to flow outside the network, making the local networks electrically comparable to radial systems with a 75 MVA generator.

223. ISO New England believes the NOPR suggests an implicit expectation regarding the determination of local networks in that there is no stated requirement for contingency analyses in that determination. ISO New England believes that the Commission understanding of criterion (b) implies that criterion (b) needs to be analyzed both pre- and post-contingency. In such a case, this issue needs to be defined in the exclusion. Additionally, ISO New England requests clarification whether this indicates that one must apply a first contingency to the analysis or a second contingency in determining if the criterion is met.

224. Dow asserts that the requirement that power may only flow into a local network should be clarified to apply only to power that originates outside of, and flows through, a local network. Dow believes that it should not apply to power generated by non-retail generation resources meeting applicable size or export quantity thresholds that are connected to local networks. Dow maintains such a clarification is consistent with other language in the exclusion specifying that up to 75 MVA of non-retail generation may be attached to a local network. Dow views the reference to non-retail generation as intended to apply to generation resources that are used to make wholesale sales which requires that power be able to flow into the bulk electric system for delivery to downstream buyers. Dow also states that exclusion E3 should be clarified to address situations in which a local network does not qualify for the local network exclusion because it is not clear ''whether all facilities rated 100 kV and above that are part of the local network would be considered part of the [bulk electric system] and become subject to transmission-related reliability standards * * *.'' [179]

225. Valero contends that criterion (b) indicates that the existence of a power flow that ''transfers through the local network'' would disqualify an element from satisfying the exclusion. On the other hand, Valero points to the excerpt from the NERC BES Petition which implies that this meaning of criterion (b) might not be the appropriate interpretation.[180] Valero requests that the Commission either clarify as stated above or modify criterion (b) to allow for transfers through the local network if such transfers are not necessary for the reliability of the interconnected transmission network.

226. NESCOE and G&T Cooperatives state that minimal transfers may and do occur, and local networks should not necessarily be ineligible for exclusion E3 simply because some amount of power may transfer out of the network. NESCOE states that the Commission should direct NERC to reevaluate exclusion E3 to allow these minimal flows up to a 100 MVA limit.[181] G&T Cooperatives state that even with optimal load projections, there may be times when energy flows into the local network that exceed the load, and in those cases the local network may need to export the excess energy back to the bulk electric system which could create perverse incentives to restrict flows into and out of the local network. G&T Cooperatives suggest that criterion (b) should be read to allow exclusion E3 to cover local networks in which ''normally'' power flows into the local network and the local network does not transfer energy originating outside the local network for delivery through the local network.

227. Holland states that the exclusion E3(b) criterion is unnecessary and should be removed. Holland states that exclusion E3(b) appears to be concerned with flows originating from outside of the local network, coming into the local network, and then exiting the local network to loads outside of the local network. According to Holland, however, exclusion E3(c) appears to address this concern because it fails to recognize that a local network may have internal generation that is less than its peak load but in excess of off-peak load levels. Holland states that, if exclusion E3(b) is maintained, then the clause, ''[p]ower flows only into the [local network],'' should be deleted because it is inconsistent with the second clause, ''the [local network] does not transfer energy originating outside the [local network] for delivery through the [local network].''

Commission Determination

228. The Commission finds that: (1) pursuant to exclusion E3 criterion (b), generation produced inside a local network should not transport power to other markets outside the local network; and (2) exclusion E3 criterion (b) applies in both normal and emergency operating conditions. The Commission agrees with NERC's statements that basing the determination solely on normal or optimal conditions could lead to inconsistent application of this exclusion and hence the definition itself, and would also introduce a degree of subjectivity in the application of the definition that is not in the interest of reliability.

229. MISO and other commenters suggest that local networks should be allowed to deliver power to the bulk electric system in some circumstances.[182] The Commission agrees that the facilities should supply such power if needed, but disagrees that facilities expected to be needed in this way should nonetheless be excluded from the bulk electric system. If a local network is expected to be needed to operate the interconnected transmission network, i.e., to meet reliability performance criteria in transmission planning assessments, it should not be excluded from the bulk electric system under exclusion E3. The Commission also rejects Holland's suggestion to remove criterion (b) because NERC has presented an acceptable technical justification for this and the other criteria in exclusion E3.[183] In response to Alameda's comment that some power should be permitted to flow out of a local network during off-peak hours, the

[179] Dow Comments at 6.

[180] The NERC statement is quoted in the NOPR at P 81: ''[l]ocal networks provide local electrical distribution service and are not planned, designed or operated to benefit or support the balance of the interconnected transmission network.''

[181] NESCOE states that this represents 25 percent of the rated value of a typical 345/115 kV substation.

[182] *E.g.* Southern Companies, Alameda, Dow, Valero, NESCOE, Holland and G&T Cooperatives.

[183] NERC BES Petition at 22–24.

Commission disagrees that the bright-line definition should be modified for case-specific circumstances. Entities can seek to exclude configurations that do not meet the exclusion E3 criteria through the exception process on a case-by-case basis. The Commission agrees with Portland that criterion (b) is similar to one element of the Seven Factor Test but otherwise addresses what constitutes local distribution above.

230. In response to Idaho Power and ISO New England asking for how emergency conditions are defined to determine if a candidate configuration meets exclusion E3 criterion (b), the Commission believes that the best way to show that a local network meets criterion (b) is through historical power flow data.

231. We will not direct NERC to allow minimal flows up to a 100 MVA limit as NESCOE requests. NESCOE may choose to pursue this matter further with NERC, with the Phase 2 project being one appropriate forum. Similarly, Dow may raise its contention that exclusion E3 should not apply to certain non-retail generation resources during Phase 2. Regarding Dow's argument that exclusion E3 should be further clarified, we believe our discussion above regarding figure 5 adequately addresses Dow's concern.

f. Criterion (c)—Not Part of a Flowgate or Transfer Path

232. Exclusion E3 criterion (c) specifies a ''local network'' does not contain a monitored facility of a permanent flowgate in the Eastern Interconnection, a major transfer path within the Western Interconnection, or a comparable monitored facility in the ERCOT or Quebec Interconnections, and is not a monitored facility included in an interconnection reliability operating limit. NERC stated that the presence of a local network is not for the operability of the interconnected electric transmission network; neither will the local network's separation or retirement diminish the reliability of the interconnected electric transmission network.'' [184] The Commission stated in the NOPR that it believes that this is an appropriate criterion.

Comments

233. G&T Cooperatives state that criterion (c) should be clarified to allow local networks to come under exclusion E3 even if they are interconnected with a ''monitored facility of a permanent Flowgate'' in the Eastern Interconnection or a ''major transfer path'' in the Western interconnection. G&T Cooperatives recognize that such monitored facilities and major transmission paths are important to reliability, but criterion (c) could be read in a manner that would prevent a local network interconnected with such major facilities from qualifying under exclusion E3. G&T Cooperatives do not believe that NERC intended such a broad reading.

Commission Determination

234. The Commission finds that exclusion E3 criterion (c) is an appropriate criterion. We agree with NERC that facilities with, e.g., permanent flowgates, cannot be included in a local network as the separation of such facilities during a system event could have an adverse impact on the operation of the interconnected transmission network. The language for criterion (c) only prohibits flowgates and their associated monitored elements from being within a candidate local network. Therefore, we believe the language is sufficiently clear and will not direct NERC to modify this provision in response to G&T Cooperatives request for clarification.

9. Exclusion E4 (Reactive Power Devices)

NOPR Proposal

235. Exclusion E4 excludes from the bulk electric system ''Reactive Power devices owned and operated by the retail customer solely for its own use.'' NERC explained that exclusion E4 is the technical equivalent of exclusion E2 for reactive power devices and that the currently effective bulk electric system definition is unclear as to how these devices are to be treated. In the NOPR, the Commission stated that this is an appropriate exclusion that provides additional clarity and granularity to the definition of bulk electric system.

Comments

236. NERC, ELCON and EEI support the Commission's proposal. Steel Manufacturers Association supports a definitive exclusion for reactive power equipment that is installed and used to benefit end use loads. The exclusion, however, in the Steel Manufacturers Association's opinion, should not be confined to such devices that are owned and operated by a retail customer solely for its own use because there are instances in which capacitor banks have been installed for the benefit of a steel-making facility but, for various reasons, that equipment is owned, operated and maintained by its local utility. Consequently, the Steel Manufacturers Association suggests that exclusion E4 be revised to read: ''Reactive Power devices owned and operated by, or installed solely for the benefit of, retail customers.''

Commission Determination

237. The Commission finds that exclusion E4 is an appropriate exclusion that provides additional clarity and granularity to the definition of bulk electric system. In response to the Steel Manufacturers Association, we will not direct the suggested clarifying change to exclusion E4 criterion. Rather, Steel Manufacturers Association may choose to pursue this matter further with NERC in its Phase 2 project.

E. The NERC Rules of Procedure Exception Process, RM12–7–000

NOPR Proposal

238. As described above in section I.D.2, NERC proposed revisions to its Rules of Procedure to provide an ''exceptions process'' to add elements to, and remove elements from, the bulk electric system, on a case-by-case basis. NERC stated, *inter alia,* that the exception process decisions to approve or disapprove exception requests will be made by NERC, rather than by the Regional Entities.

239. In the NOPR, the Commission proposed to find that, pursuant to section 215(f) of the FPA, the exception process is just, reasonable, not unduly discriminatory or preferential, and in the public interest and satisfies the requirements of section 215(c). Further, the Commission proposed to find that the proposed exception process satisfies the statement in Order No. 743 that NERC establish an exception process for excluding facilities that are not necessary for the reliable operation of the interconnected transmission network from the definition of the bulk electric system.[185]

Comments

240. Many commenters support the exception process as proposed. Commenters state that the exception process will be able to handle the more unusual situations that need to be addressed on a case-by-case basis, including sub-100 kV transmission elements that are necessary for the reliable operation of the interconnected transmission network.[186] They further state that the exception process balances the need for effective and efficient administration with due process and clarity of expectations and promotes consistency in determinations and

[184] NOPR, 139 FERC ¶ 61,247 at P 93 (citing NERC BES Petition, Exhibit G at 2).

[185] *See* NOPR, 139 FERC ¶ 61,247 at PP 103–04 (citing Order No. 743, 133 FERC ¶ 61,150 at P 16).

[186] *E.g.,* ELCON, TAPS, and Southern Companies.

eliminates regional discretion by having all decisions on exception requests made at NERC. Southern Companies support approval of the exception process and assert that the Commission should allow time for NERC, Regional Entities and industry to implement the definition and exception process and determine at a later date whether it is sufficiently capturing the appropriate facilities.

241. MISO states that RTOs, as reliability coordinators, planning coordinators or authorities, and balancing authorities, should be allowed to file exception requests. MISO also states that there should be fewer requirements for filing exception requests by RTOs because they have been assigned substantial authority over facilities under their authority by their member transmission owners and operators, and because they utilize rigorous stakeholder processes. Specifically, MISO requests that the Commission direct NERC to modify the exception process to recognize RTO stakeholder processes and their results as evidence that the RTO as the submitting entity conferred with the owner about the reasons for an exception and either an agreement was reached between the entities that an exception should be filed and that the RTO should submit the exception, or that the entities could not reach agreement regarding the submission of such an exception request.

242. NYISO comments that the exception process needs to provide interested parties notice and an opportunity to be heard. NYISO states that ISOs and RTOs have an interest in participating in an exception proceeding prior to a final determination by the Regional Entity or NERC because exception requests may affect them operationally or in their planning studies depending upon the final determination made on the specific exception request.

243. NYPSC and NESCOE are concerned that NERC's proposal does not give state commissions an opportunity to participate directly in the process. NESCOE states that, without state participation, NERC will not address the full range of substantive concerns that may arise in any given case, and, if the Commission is asked to review an exemption determination, the record presented will not reflect the states' views. NESCOE is also concerned that the exceptions process lacks a mechanism for a state regulatory authority to initiate review of the classification of an element. NESCOE contends that states may have an interest in the proper classification of bulk electric system facilities, but they are not in a position to submit an exception request because they lack the detailed information required for a submission under the proposal. NESCOE suggests that this can be remedied by allowing a state to request a review from the relevant Regional Entity and to require the Regional Entity to submit a formal exception request if it finds that the classification is inaccurate. In addition, NESCOE believes that a state should have a right to seek review from NERC of the Regional Entity's determination.

244. In reply comments, NERC disagrees with MISO and explains that the exception process needs to be applied consistently and that the required information should be the same regardless of the identity of the submitter. NERC states that the Detailed Information Form is intended to ensure that a consistent baseline of technical information is provided to the Regional Entity and NERC with all exception requests, in addition to the specific information and arguments submitted by the submitting entity in support of its exception request. The MISO Transmission Owners and AMP support NERC's comments.

245. NERC also explains that RTOs and ISOs have the ability to file an exception request where they are acting in their capacity as planning authorities, reliability coordinators, transmission operators, transmission planners, or balancing authorities. NERC states that ''the exceptions process is technical and is based on engineering expertise, and these are the necessary parties with the required information.'' [187] NERC also disagrees regarding a state or third party role and the need for notice and access to information. NERC states that state commissions have other means and methods at their disposal for working with entities to identify candidates for an exception request. NERC notes that the exception process provides that detailed notice of any request would be provided to every registered entity with reliability oversight obligation (e.g., planning authorities, reliability coordinators, transmission operators, transmission planners, or balancing authorities) for the element subject to the request and that general information about an exception request will be publicly posted. NERC also notes that third parties including state regulatory agencies will have adequate opportunity to provide comments regarding the request without formally participating in the process.

[187] NERC Reply Comments at 5.

246. ICNU states that the Commission should make clear that utilities and Regional Entities, not end-use customers should be required to perform the studies to determine if a facility of an end-use customer should be included or excluded. Alameda suggests that the Commission set forth a future date for review of the definition seeking both an effectiveness report from NERC as well as industry comment.

247. IUU and Barrick believe that NERC's explanation that an exception may be obtained by showing that the element is ''not necessary'' for reliable operation of the interconnected transmission system is too ambiguous and does not give adequate information as to what may or may not be eligible for an exception. They believe guidance is necessary as to the types of evidence that should be presented in an exception request and the criteria to which the evidence will be subjected.

248. Redding states that the exception process provides that entities are not required to use the exception process to affirmatively demonstrate they fall within the general local distribution carve-out in the core definition or meet one of the exclusions. Redding notes that new section 509 of the Rules of Procedure states that application of the entire definition will determine what facilities qualify as bulk electric system components. Therefore, Redding argues that section 509 confirms that no exception request is necessary if the facility fits within either the local distribution carve-out language of the core definition, or the explicitly identified exclusions. Furthermore, Redding argues that this is confirmed by NERC's statement that the definition expressly excludes both ''facilities used in the local distribution of electric energy,'' and radial systems as described in Exclusion E1 of the definition. Redding believes this statement recognizes that facilities that are excluded from the definition at the outset—through either the core definition or the specific exclusions—need not submit any requests through the exemption process confirming that exclusion.

249. Holland is concerned that the exception process is too narrowly focused on excluding facilities that are not necessary for the reliable operation of the interconnected transmission network. Holland does not believe that exceptions should be limited to a demonstration that the facilities lack a material impact to the bulk electric system. Holland supports the exception process for this purpose; however, the lack of materiality demonstration is independent of the question of whether

the facilities should be excluded on the grounds that they are used in local distribution. Holland believes the Commission should clarify that, for exceptions seeking exclusion based upon a claim of being local distribution, NERC must evaluate additional information submitted, and not merely rely on the criteria in Exclusions E1 through E4.

250. Steel Manufacturers Association is concerned that because the Rules of Procedure provide that only a Regional Entity may submit an exception request for the inclusion in the bulk electric system of an element owned by an owner that is not a registered entity, they do not contemplate that the owner will be notified that its facilities are being considered for inclusion in the bulk electric system.

Commission Determination

251. Pursuant to FPA section 215(f), we approve the NOPR proposal and find that the exception process is just, reasonable, not unduly discriminatory or preferential, and in the public interest. Further, we find that the proposal satisfies the statement in Order No. 743 that NERC establish an exception process for excluding facilities that are not necessary for the reliable operation of the interconnected transmission network from the definition of the bulk electric system.[188] The exception process balances the need for effective and efficient administration with due process and clarity of expectations and promotes consistency in determinations and eliminates regional discretion by having all decisions on exception requests made at NERC. The exception process also provides for involvement of persons with applicable technical expertise in making decisions on exception requests and allows for an entity to appeal a final NERC decision to the Commission.

252. The exception process provides a reasonable mechanism for the ERO to determine whether a facility or element should be added to, or removed from, the bulk electric system on a case-by-case basis. However, for the reasons explained above in our discussion in section II.C regarding local distribution, the case-by-case determination of whether an element or facility is used in local distribution will be decided by the Commission.

253. We also find that NERC's explanation, that it was not feasible to develop a single set of technical criteria that would be applicable to all exception requests so it developed the Detailed Information Form (discussed in detail below) to ensure that a consistent baseline of technical information is provided for NERC to make a decision on all exception requests, is reasonable. We find that this information, coupled with the proposed exception process, allows NERC to provide consistent determinations on exception requests submitted from different regions involving the same or similar facts and circumstances, and allows NERC to take into account the aggregate impact on the bulk electric system of approving or denying all the exception requests. Thus, we find that NERC's proposal is clear, transparent, and uniformly applicable and is as equally efficient and effective as the Order No. 743 directive to establish an exception process for excluding facilities that are not necessary for the reliable operation of the interconnected transmission network.

254. We are not persuaded by Barrick's and IUU's comments that more guidance is necessary. Order No. 743 tasked NERC with developing a revised definition and exemption process. NERC noted that it was not feasible to develop a single set of criteria. The Commission believes that applying the 100 kV threshold in the definition, the inclusions and exclusions and the information required in the Detailed Information Form will be a sufficient starting point to enable the ERO to make determinations as to whether an element is necessary for reliable operation of the interconnected transmission network. The body of exception decisions that NERC promulgates will further assist entities in presenting the relevant facts and circumstances when seeking an exception.

255. In response to MISO's request, we note that RTOs and ISOs, in their capacity as planning authorities, reliability coordinators, transmission operators, transmission planners, or balancing authorities, have the ability to file an exception request.[189] We are not persuaded that fewer requirements should apply to exception requests submitted by RTOs and ISOs, and we agree with NERC, MISO Transmission Owners and AMP that the exception process needs to be applied consistently and that the required information should be the same regardless of the identity of the submitter.

256. NYISO comments that the exception process should provide interested parties—particularly ISOs and RTOs—notice and an opportunity to be heard. As we note above, the exception process affords ISOs and RTOs, in their capacity as planning authorities, reliability coordinators, transmission operators, transmission planners, or balancing authorities, notice and opportunity to comment on elements within their scope of responsibility.

257. Similarly, with regard to NYPSC's and NESCOE's comments on the role of state commissions in the exception process, we believe that NERC's proposal is reasonable and provides an adequate opportunity for state regulator participation. Specifically, NERC explains in its ROP petition that, in developing the proposed Rules, state regulators and others raised concerns about their ability to participate in the exception process. NERC responded that ''the exception process should be one based on the technical reliability issues of the specific case presented.* * * [A] procedure that encouraged or even invited multi-party filings would unduly complicate the process without any concomitant benefit in reliability.'' [190] However, to provide transparency and some opportunity for participation, the proposed exception process provides that ''(1) detailed notice of any request would be provided to every Registered Entity with reliability oversight obligation for the Element subject to the Request and (2) general information about the request will be publicly posted,'' thereby allowing third parties including state regulators ''adequate opportunity to provide comments regarding the request without formally participating in the process.'' [191] We agree that NERC's proposal strikes an appropriate balance between efficient processing of highly technical decisions and the opportunity for states and other entities to comment in the exception process. Nonetheless, as discussed above, requests for exclusion from the bulk electric system on local distribution grounds will be determined by the Commission on a case-by-case basis. In such proceedings, state regulatory authorities will have an opportunity to intervene and provide comments.

258. We disagree with Redding's characterization of how the exception process is not necessary for determining whether an element is used for local distribution. Redding's characterization

[188] *See* Order No. 743, 133 FERC ¶ 61,150 at P 16.

[189] *See* NERC ROP Petition, Attachment 1, Proposed Appendix 5C, Section 4.1.

[190] NERC ROP Petition, Att. 9 (''The Development Process and Basis for the ROP Team's Recommended Provisions—How Stakeholder Comments were Considered and Addressed'') at 7.

[191] *Id.*

of the exception process leaves the determination of whether an element is used for local distribution in the hands of registered entities or NERC. However, as we explain in the local distribution discussion above, in circumstances where there is a factual question as to whether facilities not otherwise excluded from the bulk electric system by the core definition and four exclusions should nonetheless be excluded because they are used in local distribution, a determination should be made by this Commission. In addition, in our discussion in section II.C above regarding local distribution, we provide direction with respect to how an entity may seek a determination of whether an element is used in local distribution.

259. Regarding Steel Manufacturers Association's concern that the Rules of Procedure do not contemplate that an owner of an element that is not a registered entity will be notified by a Regional Entity that its facilities are being considered for inclusion in the bulk electric system, we note that section 4.1 of Appendix 5C the Rules of Procedure states that when a Regional Entity requests an exception, the Regional Entity ''shall prepare and submit copies of its exception request (or portions thereof) to all applicable entities* * *.'' [192] Further, section 4.4 of Appendix 5C provides that, if the submitting entity is not the owner (i.e., is a Regional Entity, planning authority, balancing authority, etc) it must provide a copy of the exception request to the owner. Therefore, if a Regional Entity submits an exception request for an element owned by a non-registered entity, the owner is notified.

260. With respect to Holland's request for clarification for what must be submitted for a claim of being local distribution, we believe that our discussion above regarding how local distribution elements will be determined addresses Holland's concerns.

261. In response to ICNU's comments, the Commission notes that NERC has identified the entities that are responsible for providing the information necessary for an exception request. Section 3.2 of the exception process states that ''the burden to provide a sufficient basis for approval of an exception request in accordance with the provisions of the exception procedure is on the submitting entity.'' Additionally, in section 4.1 of the exception process, NERC lists the eligible submitting entities as the owner of an element, or a Regional Entity, planning authority, reliability coordinator, transmission operator, transmission planner, or balancing authority that has (or will have upon inclusion in the bulk electric system) the elements covered by an exception request within its scope of responsibility.

262. Southern Companies state that the Commission should allow time for NERC, Regional Entities and industry to implement the definition and exception process and determine at a later date whether it is sufficiently capturing the appropriate facilities. Similarly, Alameda suggests that the Commission set forth a future date for review of the definition seeking both an effectiveness report from NERC as well as industry comment. First, as discussed below, the Commission is granting NERC's request for a 24 month implementation plan. The Commission believes that this is sufficient to implement the definition and exception process. In addition, the Commission declines to set a future date to determine effectiveness of the definition and the exception process.

1. How Entities Will Review and Seek Inclusion of Necessary Elements

NOPR Proposal

263. In Order Nos. 743 and 743–A, the Commission indicated that our goal is that the definition of bulk electric system should include all facilities necessary for the operation of the interconnected transmission network, except for local distribution. Further, while the Commission explained that one way to meet the goal was to establish a 100 kV ''bright line'' threshold, the Commission also made clear that the ''bright line'' threshold would be a ''first step or proxy'' in determining what facilities should be included in the bulk electric system.[193] The NOPR reiterated that, in Order Nos. 743 and 743–A, the Commission held that NERC should not necessarily stop at 100 kV and should, through the development of the exception process, ensure that ''critical facilities operated at less than 100 kV, and that the Regional Entities determine [which facilities] are necessary for operating the transmission network.'' [194] The Commission clarified that the inclusion of sub-100 kV facilities should be done in an ''appropriate and consistent'' manner.[195] Finally, in the NOPR, the Commission noted that the September 2011 Blackout Report reinforced statements in Order Nos. 743 and 743–A with respect to ensuring that sub-100 kV facilities, as appropriate, are included in the bulk electric system.[196] The Commission further noted that the NERC proposals at issue in this rulemaking take steps to address the treatment of sub-100 kV facilities, as well as other facilities, necessary for the operation of the interconnected transmission network, through the exception process. However, in light of the September 2011 Blackout Report, the Commission requested comment on how the relevant entities who control and run facilities on the interconnected transmission network will seek inclusion of sub-100 kV facilities, as well as other facilities, to ensure that all facilities that are necessary for the operation of the bulk power system are designated as bulk electric system elements.[197]

Comments

264. NERC proposes that entities can identify sub-100 kV facilities for inclusion in a variety of ways: In the course of performing planning assessments, from day-to-day operating experience, or assessment of system events that indicate facilities not identified by application of the definition are necessary for reliable operation of the interconnected transmission network. NERC further states that an entity that requests the inclusion or exclusion of a facility must provide certain technical and engineering support for its request. NERC also points out that the exception process provides for the appeal of a decision to NERC as to whether a facility is part of the bulk electric system. NERC believes this process adequately addresses the issue of whether certain sub-100 kV facilities are included in the bulk electric system.

265. ELCON states that the NOPR's suggestion that the entities would not take cognizance of Commission or NERC findings related to any sub-100 kV elements that have a material impact on system reliability would call into question the efficacy of the entire construct established by the Commission to address reliability issues.

266. APPA believes that it will be excessively burdensome to industry and small entities if they have to conduct a study of all their sub-100 kV elements. APPA asserts that it would require small registered entities to hire consultants to perform studies to assess the impact of large numbers of non-bulk electric system facilities.

[192] NERC Rules of Procedure, Appendix 5C, section 4.1.

[193] Order No. 743–A, 134 FERC ¶ 61,210 at P 40; *see also* NOPR, 139 FERC ¶ 61,247 at P 106.

[194] Order No. 743, 133 FERC ¶ 61,150 at P 121.

[195] Order No. 743–A, 134 FERC ¶ 61,210 at P 103.

[196] NOPR, 139 FERC ¶ 61,247 at P 107.

[197] NOPR, 139 FERC ¶ 61,247 at PP 109–10.

267. Idaho Power believes that entities could periodically (e.g. every five years) review the impact of sub-100 kV facilities and verify if any of the inclusions would require them to be included and explain why certain sub-100 kV facilities are excluded.

268. ISO New England and National Grid believe that, during the conduct of transmission planning system assessments, performed in accordance with requirements of the NERC Transmission Planning Reliability Standards, facilities required for inclusion in the bulk electric system may be identified.

Commission Determination

269. As we held in Order Nos. 743 and 743–A, the goal of revising the definition of bulk electric system is to ensure that all necessary facilities are included in the bulk electric system. As we noted in Order No. 743, applying the definition of bulk electric system should be a ''first step or proxy'' in determining which facilities should be included in the bulk electric system.[198] The Commission stated that NERC should not end the inquiry at 100 kV and should, through the development of the exception process, ensure that ''critical'' facilities operated at less than 100 kV, and that the Regional Entities determine are necessary for operating the interconnection network are included.[199] We continue to expect entities to identify and include sub-100 kV facilities, as well as other facilities, necessary for the operation of the interconnected transmission network. In the NOPR we asked how the entities responsible for including elements in the bulk electric system will assure that the all facilities, including sub-100 kV elements, that are necessary for operating the interconnected transmission network will be included in the bulk electric system. We find NERC's response to that question reasonable: That Regional Entities, planning authorities, reliability coordinators, transmission operators, transmission planners, balancing authorities, and owners of system elements will include, through the exception process, facilities identified in the course of performing planning assessments, from day-to-day operating experience, or assessment of system events that are not included by application of the definition but are necessary for reliable operation of the interconnected transmission network. We believe that entities, having knowledge of their systems and the concomitant planning assessments and system impact studies, will identify an element that is necessary for reliable operation of the integrated transmission network while conducting their day-to-day operations and planning and performing studies. If the element does not fall within the definition, we expect that the entity will submit the element for inclusion through the exception process. Use of this process should ensure that the all sub-100 kV elements, as well as other facilities, necessary for the operation of the interconnected transmission network are included in an ''appropriate and consistent'' manner. By identifying and seeking inclusion of sub-100 kV facilities, and other facilities, in the bulk electric system through performance of these routine functions, such as those identified by ISO New England and National Grid, we do not expect that entities will have to perform studies indiscriminately to make such determinations. Indeed, comments indicate that the determination of which elements, including sub 100 kV elements, should be included in the bulk electric system is a natural part of an entities' process for assuring the reliable operation of the grid.[200] Thus, the Commission believes that, if a study is needed outside the ordinary course of operations, it would be infrequent. By adopting this approach, we believe that APPA's concerns about burdensome tasks are alleviated.

2. NERC Role in Identifying Necessary Elements

270. In the NOPR, the Commission observed that, despite NERC's statutory functions to develop and enforce Reliability Standards, its continent-wide perspective, and technical understanding that can provide valuable assistance in the identification of bulk electric system facilities, the exception process does not provide that NERC may initiate an exception request. Accordingly, the Commission requested comments on the role NERC should have in initiating the designation of or directing others to initiate the designation of sub-100 kV facilities, or any other facilities, necessary for the operation of the interconnected transmission network for inclusion in the bulk electric system.[201] The Commission also requested comment on the role NERC should have in designating sub-100 kV facilities, and other facilities, for inclusion in the bulk electric system, directing Regional Entities or others to conduct such reviews, or itself nominating an element to be included in the bulk electric system.

Comments

271. NERC states that inherent in its oversight of the Regional Entities is the ability to request a Regional Entity or others to propose inclusion of sub-100 kV facilities, and other facilities in the bulk electric system. NERC further states that the Rules of Procedure do not limit its ability to perform this function and such action is fully consistent with NERC's obligations and authority as the ERO.

272. Dominion believes that if NERC wants to nominate a sub-100 kV facility, it could do so through the broad powers assigned to NERC through its Rules of Procedure and/or regional delegation agreements. TAPS maintains that if, through its investigations, risk assessments, or analysis of events, NERC identifies facilities that should be included in (or excluded from) the bulk electric system, it would be appropriate for NERC to have the authority to make such a proposal through the exception process, provided that it implements due process safeguards such as the designation of decisional and non-decisional staff.

273. Several commenters state that NERC should have the ability to nominate a facility for inclusion. SmartSenseCom believes NERC should have authority to initiate an exception request because, even with a bright line standard, there remains the possibility of inconsistent interpretation and application of the definition. ISO–NE states that NERC should have the ability to nominate a facility for inclusion, but the Regional Entities along with planning authorities, reliability coordinators, transmission operators, transmission planners and balancing authorities should be provided an opportunity to review and comment on this nomination.

274. AEP believes that RTOs or Regional Entities ''are equipped to facilitate the efforts to be effective with the exception process.''[202] AEP also suggests that NERC and the Commission could assign review of sub-100 kV facilities to the RTOs. AEP states that the RTO processes could be modified to address the exceptions. AEP defers to the judgment of the Commission and NERC in regions where there are currently no functioning RTOs.

275. Other commenters do not support a NERC role as contemplated in the NOPR. SoCal Edison believes that

[198] NOPR, 139 FERC ¶ 61,247 at P 106 (citing Order No. 743–A, 134 FERC ¶ 61,210 at P 40).

[199] Order No. 743, 133 FERC ¶ 61,150 at P 121.

[200] *E.g.*, ELCON Comments at 8.

[201] NOPR, 139 FERC ¶ 61,247 at P 111.

[202] AEP Comments at page 11.

NERC should not initiate exception requests to include facilities within the bulk electric system. Rather, SoCal Edison posits that NERC's role is to communicate to the Regional Entities their obligation to review systems in their area that operate in parallel with the bulk electric system and to include such systems in the bulk electric system. APPA supports consideration of a NERC role in Phase 2 of the project to identify specific reliability gaps but objects to NERC being able to step into the shoes of the Regional Entity.

Commission Determination

276. NERC states that, as the ERO, and in its oversight of the Regional Entities, it has the ability to request a Regional Entity or others to propose inclusion of sub-100 kV facilities, and other facilities, in the bulk electric system. NERC believes that nothing in the proposed Rules of Procedure limits its oversight obligations and authority as the ERO. The Commission finds NERC's approach to be reasonable. Section 215(e)(4)(C) of the FPA authorizes the Commission to issue regulations authorizing the ERO to enter into an agreement to delegate authority to Regional Entities if the agreement promotes effective and efficient administration of Bulk-Power System reliability.[203] Subsequently, the Commission approved delegation agreements between NERC and the eight Regional Entities.[204] Pursuant to the delegation agreements, NERC may issue guidance or directions as to the manner in which a Regional Entity performs delegated functions and related activities.[205] Thus, the Commission agrees with NERC that, as the ERO, NERC has the authority to request a Regional Entity or other eligible submitting entity to propose inclusion of sub-100 kV facilities, or other facilities, in the bulk electric system.

277. TAPS supports NERC having the ability to initiate the designation of facilities or elements as part of the bulk electric system, provided that NERC implements due process safeguards such as the designation of appropriate decisional and non-decisional staff. We agree that, to avoid actual or appearance of impropriety, NERC must develop appropriate safeguards.

278. In response to AEP, the Commission will not direct modifications to provide RTOs and ISOs the authority to address exception requests. RTOs and ISOs can submit exception requests in their capacity as planning authorities, reliability coordinators, transmission operators, transmission planners, and/or balancing authorities.

3. Commission Role in Identifying Necessary Elements

NOPR Proposal

279. In the NOPR, the Commission requested comment on the role the Commission should have with respect to the designation of sub-100 kV facilities, or other facilities, necessary for the operation of the interconnected transmission network for inclusion in the bulk electric system. The Commission observed that ''there may be circumstances (like the September 2011 Blackout Report) where the Commission, through the performance of its statutory functions, may conclude that certain sub-100 kV facilities not already included in the bulk electric system are necessary for the operation of the interconnected transmission network and thus should be included in the bulk electric system.'' [206] The Commission stated that it expected that Regional Entities and others ''will take affirmative steps to review and include sub-100 kV elements and facilities, and other facilities, necessary for the operation of the interconnected transmission system in the bulk electric system,'' and requested comment as to how the Commission could ensure that such facilities are considered for inclusion in the bulk electric system.[207] The Commission also requested comment on instances when the Commission itself should designate or direct others to designate sub-100 kV facilities, or other facilities, necessary for the operation of the interconnected transmission grid for inclusion in the bulk electric system.

Comments

280. NERC notes that the Commission has authority pursuant to FPA section 215(d)(5) to initiate a Reliability Standards development process that ''addresses a specific matter.'' According to NERC, for the Commission to play a more active role in the designation of such facilities would be inconsistent with its role as the adjudicator of disputes.

281. Some commenters assert that the Commission has the authority to designate a facility as part of the bulk electric system.[208] SmartSenseCom states that, if the Commission is concerned that a facility is necessary for the operation of the interconnected transmission system, it possesses authority to order NERC or a Regional Entity to address that matter. Specifically, SmartSenseCom points to section 215(b) and section 215(d)(5) where the Commission has plenary authority over the ERO and ''all users, owners, and operators of the bulk-power system'' for the purposes of approving reliability standards and enforcing compliance with those standards.[209] SmartSenseCom states that, pursuant to the statutory authority, the Commission could, on its own motion, ''order [NERC] to submit * * * a modification to a reliability standard that addresses a specific matter if the Commission considers such * * * modified reliability standard appropriate to carry out this section.'' [210]

282. Furthermore, SmartSenseCom states that the Commission should be able to review NERC exceptions decisions. SmartSenseCom asserts that NERC decisions should be subject to the discretionary review of the Commission and the Commission should retain the ability to remand or reject an exception determination, pursuant to the Commission's FPA section 215 statutory authority to approve, disapprove, or remand NERC-proposed Reliability Standards. While the Commission should give NERC's exception decision ''due weight'' as required by section 215, SmartSenseCom asserts that the availability of review would ensure reliable operation of existing and future Bulk-Power System facilities. SmartSenseCom also suggests that Commission review of exception decisions would provide industry stakeholders with valuable precedent and clarity on the treatment of certain facilities.

283. Other commenters claim that the Commission does not possess the authority to designate elements as part of the bulk electric system. ISO New England contends that the Commission, as the ultimate decision making authority, should not have a role in nominating facilities for inclusion in the bulk electric system. APPA does not believe that the FPA gives the Commission authority to designate specific elements for inclusion in the

[203] 16 U.S.C. 824o (2006).

[204] *North American Electric Reliability Corp.,* 119 FERC ¶ 61,060, *order on reh'g,* 120 FERC ¶ 61,260 (2007).

[205] *See, e.g.,* section 8(d) of the Amended and Restated Delegation Agreement between NERC and Midwest Reliability Organization (* * * the NERC Board (or a Board committee to which the Board has delegated authority) may issue guidance or directions as to the manner in which Midwest Reliability Organization and, if applicable, other Regional Entities, shall perform delegated functions and related activities.'').

[206] NOPR, 139 FERC ¶ 61,247 at P 112.

[207] NOPR, 139 FERC ¶ 61,247 at P 112.

[208] *E.g.,* Dominion and SmartSenseCom.

[209] SmartSenseCom Comments at 14, *quoting* 16 U.S.C. 824o(b).

[210] *Id.* at 14, *quoting* 16 U.S.C. 824o(d)(5).

bulk electric system. Rather, according to APPA, the Commission's role is to review NERC decisions. APPA states that policy considerations and Congressional intent also ''militate against direct [Commission] identification of specific facilities or classes of facilities to be included in the [bulk electric system] definition.'' [211] APPA asserts that, during the course of a Part 1b investigation or other inquiry, the Commission may identify facts that indicate that a registered entity has not properly applied the definition. APPA points to FPA section 215(e)(3) which provides that, after notice and opportunity for hearing, the Commission may enforce compliance by a particular user, owner or operator of the Bulk-Power System with a Reliability Standard, which could include application of the definition within the context of a specific reliability standard. APPA argues, that section 215 contemplates a standard development and enforcement framework in which rules of general applicability, i.e., Reliability Standards, are developed by the ERO on a continent-wide, and are subject to Commission approval prior to the enforcement of such Reliability Standards. In contrast, APPA argues that section 215 contemplates the delegation of enforcement authority by the ERO to Regional Entities that are organized to accomplish this specific purpose. APPA concludes that the Commission, like NERC, should focus its resources on ensuring that Regional Entities enforce compliance with the definition and the Rules of Procedure.

284. SoCal Edison does not support active Commission involvement in designating facilities for inclusion in the bulk electric system. According to SoCal Edison, because the Commission has the authority to review NERC's decisions in the exceptions procedure, the Commission's role should be limited to providing to NERC information that the Commission develops on facility categories that should potentially be included in the bulk electric system. Further, SoCal Edison states that NERC should be responsible for communicating that information to Regional Entities for further action and ensuring that those Regional Entities take the appropriate action with respect to such information, and the Commission should ensure that NERC and the regional authorities act upon the information provided by the Commission with respect to such facilities.

[211] APPA Comments at 20.

Commission Determination

285. For the reasons discussed below, we conclude that the Commission has the authority to designate an element as part of the bulk electric system pursuant to our authority set forth in sections 215(a)(1) and (b)(1) of the FPA. We are cognizant of the concerns stated by SoCal Edison and other commenters regarding the appellate role of the Commission, and the desire to allow registered entities and Regional Entities to take the lead in identifying sub-100 kV elements, and other elements, that should be included in the bulk electric system. As explained above, we expect entities to identify and include sub-100 kV elements, and other elements, that are necessary for operating the interconnected transmission network in the bulk electric system. Nonetheless, we believe that in appropriate circumstances, for example, where an event analysis of a system disturbance indicates the operational importance of sub-100 kV elements, and other elements, to bulk electric system reliability, the Commission may find it necessary for the reliable operation of the interconnected transmission network to designate facilities to be included in the bulk electric system. We anticipate that such circumstances will be rare. Consistent with the approach discussed in the NOPR, the Commission would provide public notice and opportunity for public comment before designating facilities as part of the bulk electric system.[212]

286. Commenters are mistaken in characterizing the Commission's designation of facilities as bulk electric system as a modification to the bulk electric system definition or other Reliability Standard. Rather, our authority to designate facilities is based on the statutory definition of Bulk-Power System and the jurisdictional authority vested in the Commission pursuant to section 215 of the FPA. Specifically, section 215(b)(1) of the FPA provides that ''the Commission shall have jurisdiction, within the United States, over * * * all users, owners and operators of the bulk-power system * * * for purposes of approving Reliability Standards established under this section and enforcing compliance with this section.'' [213] Section 215(a)(1) of the FPA, in turn, defines ''Bulk-Power System'' to mean ''facilities and control systems necessary for operating an interconnected electric energy transmission network (or any portion thereof); and electric energy from generation facilities needed to maintain transmission system reliability.'' [214] If an entity owns or operates sub-100 kV elements, or other elements, ''necessary for operating an interconnected electric energy transmission network,'' the Commission has jurisdiction pursuant to FPA section 215(b)(1) to ''enforc[e] compliance with this section,'' and to ensure that the approved definition is being implemented properly.

287. For example, an entity may operate sub-100 kV elements, or other elements, that are, pursuant to the modified definition approved in this Final Rule, not treated as part of the bulk electric system. However, an event analysis may reveal that such facilities are ''necessary for operating an interconnected electric energy transmission network.'' As an appropriate prospective remedy, pursuant to the FPA section 215(b)(1) authority to ''enforc[e] compliance with this section,'' the Commission could designate the facilities as part of the bulk electric system. This approach is consistent with Commission precedent regarding unregistered entities whose facilities are involved in a violation of Reliability Standards. The Commission determined that, in such situations, the appropriate remedy is to register the entity so that, prospectively, the entity must comply with the relevant Reliability Standards based on the functions performed by that entity.[215]

288. The Commission would not modify the language of the definition of bulk electric system or the specific inclusions and exclusions. Rather, the Commission would initiate the designation of elements to ensure that the definition is properly applied. To be clear, when, for example, a system disturbance or other event demonstrates the necessity of sub-100 kV elements, or other elements, for reliable operations, we expect in the normal course that registered entities, Regional Entities and NERC will proactively identify and include sub-100 kV elements, or other elements, in the bulk electric system. The Commission's strong preference is that registered entities review their facilities to determine which are needed for operating the interconnected transmission network and include them in the bulk electric system. However, when it is recognized that an element is necessary for the operation of the interconnected transmission network and no other entity steps forward to

[212] NOPR, 139 FERC ¶ 61,247 at P 112, n.127.

[213] 16 U.S.C. 824o(b)(1).

[214] 16 U.S.C. 824o(a)(1).

[215] *See Reliability Standard Compliance and Enforcement in Regions with Regional Transmission Organizations or Independent System Operators,* 122 FERC ¶ 61,247, at P 19 (2008).

designate the element as included in the bulk electric system for purposes of section 215, the Commission has the authority to do so. We anticipate that such instances will be rare. Should the Commission find it necessary and appropriate to exercise this authority, we anticipate that the Commission would, for example, issue either a notice or order proposing to designate a specific element or elements as part of the bulk electric system, and explain the rationale for the proposal. The Commission would make a final determination after providing notice and opportunity for comment by interested parties.

4. Technical Review Panel

NOPR Proposal

289. NERC's exception process provides that the Regional Entity shall not recommend disapproval of the exception request without review by a technical review panel. The Regional Entity is not bound by the opinion of the panel, but the panel's evaluation becomes part of the record associated with the exception request and provided to NERC. In the NOPR, the Commission stated that it saw value in the Regional Entity receiving the opinion of a qualified technical review panel. The Commission observed that NERC did not explain why the proposed exception process only requires a technical review panel to provide an opinion where the Regional Entity recommends disapproval of an exception request. Accordingly, the Commission requested comment from NERC explaining why the review is only required when a Regional Entity disapproves a request and whether NERC should modify the exception process to require Regional Entities to submit all proposed determinations to a technical review panel regardless of the recommendation and receive the panel's opinion on each request.

Comments

290. NERC stated that it considered obtaining the opinion of a technical panel for all Regional Entity recommendations; however, NERC concluded that a review should only be required when a Regional Entity disapproves a request due to concerns regarding administrative efficiency. NERC determined that negative technical reviews would be sufficient to promote consistency and that the additional costs and work of a review of all proposed determinations would outweigh the benefits. NERC further states the record of every request is reviewed by a panel of experts at the NERC level as part of the decision making process.

291. Several entities support NERC's explanation.[216] ELCON believes NERC's approach will avoid the burden, inefficiency and delay inherent in unnecessary referrals to a technical review panel. ELCON notes that the exception process already calls for submission of in-depth technical information through the Detailed Information Form, initial review by the Regional Entity, and subsequent review and final decision by NERC. ELCON believes that considerable technical expertise will, therefore, be available to both the Regional Entity and to NERC as they assess exception requests.

292. In contrast, some entities believe that a technical panel be convened for either approval or denial of all exceptions.[217] They believe that using a panel for all requests will ensure that the requests receive adequate consideration and vetting before a final decision is rendered. WPPC requests that the Commission obtain additional information from NERC with respect to why the Technical Review Panels are not required to review all exception requests that are rejected on procedural grounds.

Commission Determination

293. The Commission accepts NERC's explanation that requiring a technical panel review of all Regional Entity recommendations will likely cause an additional administrative burden on Regional Entities, delaying final recommendations to NERC. While the Commission sees benefits in utilizing a technical review panel for all requests, we are not persuaded that these benefits will outweigh the costs associated with the increased administrative burden likely to be imposed. Additionally, if the Technical Review Panel does not provide an opinion on all exception requests, the exception process is not without other levels of technical review. On the contrary, the exceptions process provides multiple levels of technical review before a final determination is made by NERC, including a substantive review by the Regional Entity and a subsequent review by a panel of technical experts at the NERC level. For these reasons, the Commission approves the Technical Review Panel as proposed by NERC.

294. In response to WPPC's request, the Commission declines to seek further information from NERC with respect to why the Technical Review Panels are not required to review all exception requests that are rejected on procedural grounds. Section 5.1.5(a) of Appendix 5C to the Rules of Procedure requires a Regional Entity to reject an exception request if it is not from an eligible submitting entity and/or it does not contain all the required information specified in section 4.0. The Commission does not believe a Technical Review Panel needs to determine if an exception request was properly submitted by an eligible entity and/or contains all the required information. Additionally, as WPPC states in its comments, submitting entities may appeal Regional Entity rejections of exception requests to NERC through the procedure provided in section 7.0 of the exception process. Requiring Technical Review Panel review of all rejections of exception requests, as well as all recommendations of disapprovals, would unnecessarily impose administrative burdens as if the Technical Review Panel was required to review all exception request recommendations. For these reasons, the Commission declines WPPC's request to obtain further information from NERC on this matter.

5. Use of Industry Subject Matter Experts

NOPR Proposal

295. Section 8 of the proposed exception process sets forth the procedures for NERC's review of a Regional Entity's recommendation. The NERC President will appoint a team of at least three persons with the relevant technical background to evaluate an exception request. NERC contemplated that its review teams would be drawn from NERC staff resources, supplemented by contractors as necessary, but situations may arise in which NERC may need to call on industry subject matter experts to participate as members of review teams. In the NOPR the Commission supported NERC's proposal to use staff resources, supplemented by contractors as necessary, to make up the exception request review teams. We stated that consistent appointment of the same NERC staff and contractor resources, based on subject matter expertise, will promote a more uniform and consistent review of the Regional Entities' exception request recommendations.

Comments

296. No comments were received on this issue.

[216] *E.g.,* Idaho Power, ELCON, and G&T Cooperatives.

[217] *E.g.,* ISO New England and BPA.

Commission Determination

297. The Commission agrees with NERC's proposal to use staff resources, supplemented by contractors as necessary, and potentially industry subject matter experts to make up the exception request review teams. The Commission believes that ensuring that members of the NERC review teams have the required technical background necessary to evaluate exception requests, review supporting technical documents, and assess technical recommendations, is essential to providing consistent technically sound determinations on exception requests. The Commission believes that consistent appointment of the same NERC staff, contractor resources and industry subject matter experts, based on subject matter expertise, will promote a more uniform and consistent review of the Regional Entities' exception request recommendations.

6. NERC's Detailed Information Form

NOPR Proposal

298. NERC developed the Detailed Information Form that the Regional Entity and NERC can use in evaluating whether or not the elements that are the subject of an exception request are necessary for operating the interconnected transmission network. In the NOPR, the Commission stated that this information will provide consistency with respect to the technical information provided with all exception requests and is an equally efficient and effective approach to developing a substantive set of technical criteria for granting and rejecting exception requests and proposed to approve the Detailed Information Form.

Comments

299. ELCON supports the Detailed Information Form and agrees that it is ''more feasible to develop a common set of data and information that could be used by the Regional Entities and NERC to evaluate exception requests'' than to develop the detailed criteria and that the information specified in the form is relevant and appropriate for exception requests.

300. Holland and Alameda state that there should be some basic guidelines to evaluate an exception request. Alameda states that having no technical criteria provides entities with no guidance considering a request for exception. Alameda submits that parties should have a reasonable basis for determining the outcome of a potential exception request in advance of taking the time and effort to make the request. Alameda suggests that the Commission direct NERC to develop appropriate technical exception criteria, recognizing that each criterion may not apply to all requests and that the criterion may even change over time as specific requests are evaluated in detail. Alameda also seeks clarification that parties may seek exceptions for proposed facilities, and not just for existing facilities as allowing exceptions to be requested for proposed facilities would provide an opportunity for entities to make reasoned decisions about planned system improvements.

Commission Determination

301. We approve the Detailed Information Form and find that it will provide consistency with respect to the technical information provided with all exception requests and is an equally efficient and effective approach to developing a substantive set of technical criteria for granting and rejecting exception requests. We decline to adopt Alameda's suggestion that the Commission direct NERC to develop appropriate technical exception criteria. We accept NERC's conclusion that it was more feasible to develop a common set of data and information that could be used by the Regional Entities and NERC to evaluate exception requests than to develop the detailed criteria. NERC's proposal provides the needed flexibility to allow Regional Entities to make a recommendation of whether or not an element is necessary for the reliable operation of the interconnected transmission network. Thus, the detailed criteria that NERC requires, plus other information that an entity is free to include in its submission will provide applicants a reasonable basis for determining whether an element is necessary for the reliable operation of the interconnected transmission network. We also decline to direct NERC to determine how to treat exceptions for proposed facilities.

7. NERC's Implementation Plan

NOPR Proposal

302. NERC requests that the effective date for revised definition should be the first day of the second calendar quarter after receiving applicable regulatory approval, or, in those jurisdictions where no regulatory approval is required, the revised bulk electric system definition should go into effect on the first day of the second calendar quarter after its adoption by the NERC Board. NERC also requested that compliance obligations for all newly-identified elements to be included in the bulk electric system based on the revised definition should begin twenty-four months after the applicable effective date of the revised definition. NERC stated that sufficient time is needed to implement transition plans, for exceptions to be filed and processed, for owners of newly-included elements to train their personnel on compliance with the Reliability Standards. In the NOPR, the Commission supported NERC's justification for its implementation and proposed to approve NERC's implementation plan.

Comments

303. A number of commenters support the NOPR proposal.[218] ELCON states that the twenty-four month time period gives sufficient time to accommodate planning for and changes resulting from the new definition, including any exception requests and compliance obligations, without causing undue delay. Consumers believes the twenty-four month period should be sufficient in most cases but believes that the Commission should make specific provision for longer periods to be allowed on a case-by-case basis under special circumstances. Barrick and IUU also support the implementation plan but believe further clarification is necessary with respect to an entity's status during the exception process.

Commission Determination

304. We agree with commenters that the twenty-four month time period gives sufficient time to accommodate planning for and changes resulting from the new definition, including any exception requests and compliance obligations. Therefore, we approve NERC's proposal to implement a twenty-four month implementation plan. In response to Consumers' comment regarding the need for additional time for special circumstances, an entity or NERC may petition for an extension of time. In response to the comments raised by Barrick and IUU, we clarify that the status of an element remains unchanged during the exception process.

8. NERC List of Facilities Granted Exceptions

NOPR Proposal

305. In the NOPR, the Commission noted that the proposed exception process does not include provisions for NERC to maintain a list of facilities that have received exceptions, as requested in Order No. 743. In its petition, NERC indicated that this is an internal administrative matter for NERC to implement that does not need to be embedded in the Rules of Procedure. NERC stated it will develop a specific

[218] *E.g.,* Consumers Energy, ELCON, and NYISO.

internal plan and procedures for maintaining a list of facilities for which exceptions have been granted and notes that Regional Entities will maintain lists of elements within their regions for which exceptions have been granted, in order to monitor compliance with the requirement to submit periodic certifications.

306. In the NOPR, the Commission proposed that NERC make an informational filing within 90 days of the effective date of a final rule, detailing its plans to maintain a list and how it will make this information available to the Commission, Regional Entities, and potentially to other interested persons.[219] The Commission also requested comment on whether NERC's proposal should be modified to include an obligation for the registered entity to inform NERC or the Regional Entity of the entity's self-determination through application of the definition and specific exclusions E1 through E4 that an element is no longer part of the bulk electric system.

Comments

307. NERC confirms that it is continuing to develop details regarding how the list of facilities that have received exceptions will be maintained. According to NERC, a 90-day window of time in which to submit an informational filing is reasonable.

308. Other entities support NERC's plan.[220] AEP cautions that the process of submitting a filing must not overstep the confidentiality provisions of Critical Energy Infrastructure Information as part of the gathering and dissemination of list(s).

309. The Massachusetts DPU supports NERC's keeping a list of exceptions and requests that the Commission requires that state regulatory authorities have appropriate access to the list. ISO New England proposes that NERC submit a compliance filing detailing its internal process for tracking exception requests. ISO New England also believes that NERC and/or the Regional Entities should be required to maintain a database that lists the bulk electric system elements within their respective footprints and should make this data available for affected entities.

Commission Determination

310. We adopt the NOPR proposal and direct NERC to make an informational filing within 90 days of the effective date of this Final Rule detailing its plans to maintain a list and how it will make this information available to the Commission, Regional Entities, and potentially to other interested persons. We find that the suggestions of the Massachusetts DPU and ISO New England are premature as these comments are more appropriate for consideration after NERC makes its compliance filing.

9. Declassification of Facilities

NOPR Proposal

311. In the NOPR, the Commission observed that, while NERC will maintain a list of facilities that have received an exception pursuant to the case-specific exception process, NERC does indicate whether it will track an entity's ''declassification'' of current bulk electric system facilities based on the entity's self-application of the bulk electric system definition.[221] The Commission expressed concern particularly when an entity self-determines that an element is no longer part of the bulk electric system but the entity is large enough to otherwise remain on the NERC Compliance Registry. Accordingly, the Commission requested comment on whether NERC's proposal should be modified to include an obligation for the registered entity to inform NERC or the Regional Entity of the entity's self-determination through application of the definition and specific exclusions E1 through E4 that an element is no longer part of the bulk electric system.

Comments

312. NERC asserts that registered entities are obligated to inform the Regional Entity of any self-determination that an element is no longer part of the bulk electric system. NERC points to section 501 of the currently-effective Rules of Procedure, which provides that each registered entity must notify its Regional Entity of any matters that affect the registered entities' responsibilities with respect to Reliability Standards. NERC contends that a determination that an element is no longer part of the bulk electric system would necessarily affect an entity's responsibilities with respect to the Reliability Standards. Further, NERC states that an entity's failure to notify would not relieve it of any obligations it may have associated with such failure.

313. Idaho Power and National Grid support that registered entities should inform NERC or the Regional Entity of elements that have been declassified. National Grid supports an obligation for each registered entity to inform the respective reliability coordinators and Regional Entity of the entity's self-determination through application of the definition and specific exclusions that an element is no longer part of the bulk electric system.

314. PSEG Companies do not support requiring self reporting. PSEG Companies point out that when the NERC Functional Model was first put in place, registered entities made determinations of which facilities should be included and excluded from the bulk electric system without any reporting requirements for those decisions. PSEG Companies assert that a registered entity should only be contacting its Regional Entity regarding status changes if those changes impact the registered entity's registration (e.g., if a registered Transmission Owner disposes of all its 100 kV or higher assets or a generation owner acquires its first BES generator). According to PSEG Companies, facility changes that impact a facility's bulk electric system status do not presently require reporting. The proposed reporting self-determined exclusions could lead to extensive facility-by-facility tracking and reporting of all status changes which would be overly burdensome to Registered Entities.

315. AEP believes that it is imperative to keep the process simple in the beginning, and thus advocates that no specific information submission requirements be implemented at this time. If NERC or the Regional Entities determine this approach is problematic in the future, AEP states that any issues can be addressed through a change in the NERC Rules of Procedure.

316. ICNU states that if NERC requires an end-use retail customer to provide notice of declassification, such notice should not involve extensive or burdensome reporting requirements because, as noted above, end-use customers do not have the required resources or expertise. On the other hand, ICNU believes that non-registered end-use retail customers who, based on the new BES definition, determine that they remain excluded from the BES should not be listed or required to report such determination to NERC or the appropriate Regional Entity.

Commission Determination

317. We agree with NERC that registered entities are obligated to inform the Regional Entity of any self-determination that an element is no longer part of the bulk electric system. PSEG Companies claim that there is currently no requirement to report the change in status of facilities. NERC, however, cites section 501 of the currently-effective Rules of Procedure,

[219] NOPR, 139 FERC ¶ 61,247 at P 123.

[220] ELCON and NRECA.

[221] NOPR, 139 FERC ¶ 61,247 at P 123.

which provides that each registered entity must notify its Regional Entity of any matters that affect the registered entities' responsibilities with respect to Reliability Standards. Section 501 also requires entities to inform the Regional Entity of any self-determination that an element is no longer part of the bulk electric system. Section 501, Part 1.3.5 provides:

> Each Registered Entity identified on the NCR shall notify its corresponding Regional Entity(s) of any corrections, revisions, deletions, changes in ownership, corporate structure, or similar matters that affect the Registered Entity's responsibilities with respect to the Reliability Standards. Failure to notify will not relieve the Registered Entity from any responsibility to comply with the Reliability Standards or shield it from any Penalties or sanctions associated with failing to comply with the Reliability Standards applicable to its associated Registration.

Thus, a registered entity that concludes that an element is no longer part of the bulk electric system must notify the Regional Entity of such change. Further, we disagree with PSEG Companies that such notification is unnecessary. PSEG Companies point out that NERC did not require such notification when the Functional Model was first put into place. Regardless of past practice, we find that such notification is a necessary feature of the changes being implemented by NERC. As explained in the NOPR:

> A large utility with hundreds or thousands of transmission lines may initially determine that a configuration on its system does not qualify for the exclusion E3 local network exclusion, but subsequently determines that the configuration can be excluded. NERC's petition does not indicate whether an entity in such circumstance is obligated to inform NERC or the appropriate Regional Entity of that self-determination. It appears that NERC and the Regional Entities would need this information for their compliance programs, for audit purposes, and to understand the contours of the bulk electric system within a particular region.

Further, the revised definition allows entities the discretion to ''declassify'' certain facilities as part of the bulk electric system, and NERC, Regional Entities and the Commission need notification of such instances to assure that the entities are appropriately implementing the revised definition.

318. We affirm ICNU's assertion that this task does not involve new, extensive or burdensome reporting requirements. We view this as an identification and notification task so that a Regional Entity and NERC will know what elements are or not part of the bulk electric system. This will provide the entities tasked with overseeing the reliable operation of the interconnected transmission network with having an adequate level of information and transparency to fulfill those obligations. We disagree with PSEG Companies that this is an overly burdensome requirement. First, such information sharing is already contemplated by the Rules of Procedure. Second, as noted above, we do not view this requirement as one that involves anything more than notification. It does not require a justification of why the element is being excluded.

III. Information Collection Statement

319. The Office of Management and Budget (OMB) requires that OMB approve certain information collection and data retention requirements imposed by agency rules.[222] Upon approval of a collection(s) of information, OMB will assign an OMB control number and an expiration date. Respondents subject to the filing requirements of a rule will not be penalized for failing to respond to these collections of information unless the collections of information display a valid OMB control number.

Public Reporting Burden and Information Collection Costs

320. In the NOPR, the Commission solicited comment on the need for collecting the information that is required to be prepared, maintained and/or submitted pursuant to this Final Rule, whether the information will have practical utility, the accuracy of the burden estimates, ways to enhance the quality, utility, and clarity of the information to be collected or retained, and any suggested methods for minimizing respondents' burden, including the use of automated information techniques. The NOPR also included a chart that identified the estimated public reporting burdens for the proposed reporting requirements, as well as a projection of the costs of compliance for the reporting requirements. The Commission asked that any revised burden estimates submitted by commenters be supported by sufficient detail to understand how the estimates are generated. The Commission based its burden estimate on the revised definition of bulk electric system developed by NERC.

321. In the NOPR, the Commission stated that the proposal would result in entities reviewing systems and creating qualified asset lists, submitting exception requests where appropriate, and certain responsible entities having to comply with requirements to collect and maintain information in mandatory Reliability Standards with respect to certain facilities for the first time. The Commission requested comment on the estimated number of entities that will have an increased reporting burden associated with the identification of new bulk electric system elements as a result of the modified definition. In developing an estimate of the reporting burden associated with the inclusion of additional elements, like NERC, the Commission assumed that entities in the NPCC Region will be most affected, with a lesser affect in other regions.

Comments

322. NRECA and APPA do not take a position on the estimates but observe that modifications to the proposed definition or directives to NERC may result in substantial changes to the burden estimates and the assessment of whether the which would require the Commission to re-assess its burden and small business impact determinations. Similarly, APPA and WPPC believe that any changes to the proposed definition in the Final Rule that would include additional facilities would cause a significant increase in the reporting burden on the industry. APPA believes that if the Commission were to direct NERC to make revisions to the specific inclusions or exclusions without technical justification, the exception process would quickly become overloaded, with burdens on those seeking exceptions and those ruling on them.

323. A number of commenters state that the NOPR underestimated the burden of the rulemaking in terms of hours required to comply. APPA believes that the Commission underestimates the information collection costs and the costs of compliance for small utilities. For example, the Commission's assumption that utility staff would be used to conduct an analysis is not merited in the case of many small entities. APPA states that many of its smaller members do not have the in-house employees and resources to conduct such reliability analyses and would have to rely on outside consultants and legal firms. Therefore, APPA estimates that the fees small utilities would pay for each of the services, based on information and belief, as follows: Consulting Engineer, $225/hour; Record Keeping, $75/hour; and Legal, $500/hour.

324. Idaho Power contemplates five local network exclusions which contain sixty 100 kV and above lines, and its estimates for the time involved to document these exceptions leads it to believe the Commission is underestimating the number of engineer

[222] 5 CFR 1320.11 (2011).

hours per entity's responses. According to Idaho Power, based on an initial review of potential exceptions, Idaho Power may seek approximately 9–12 exceptions. Idaho Power agrees with the estimate that transmission owners, generator owners, and distribution providers will experience more significant reporting burdens than other categories of registered entities.

325. ISO New England believes that there could be a significant burden on planning coordinators and transmission planners which is not addressed in the table shown in the NOPR. ISO New England states that, while it has not performed a similar analysis, it appears that the ''Year 1'' estimates in the table in the NOPR are significantly understated in view of the resources that it believes will be necessary to establish the initial list. According to ISO New England, the estimate of approximately $13 million expended over the entire system seems overly optimistic. BPA anticipates, based on customer feedback, that the BPA footprint alone will experience several hundred exception requests in the first two years. BPA estimates the additional workload from evaluating the exception requests will be approximately five to six full time equivalents which includes one full time coordinator, a customer service engineer for system verification, a planner to run studies, an operations engineer, and dispatch personnel for real-time system impacts. NYPSC and the Massachusetts DPU contend that the costs of compliance with the definition will be excessive. NYPSC cites to a 2009 report from NERC and NPCC, that the compliance costs would exceed $280 million.

Commission Determination

326. Commenters raise concerns that modifications to the proposed definition or directives to NERC may result in substantial changes to the burden estimates. While the Commission is requiring one modification to the language in the NERC proposal, the Commission finds that it does not need to reassess the burden estimates because the change is intended to simply make more explicit what NERC and other commenters indicate is the expected application of the proposed definition to a low-voltage, looped system as depicted in figures 3 and 5 above. Therefore, we do not anticipate the one modification to result in a significant change to what elements are considered part of the bulk electric system or applications for case-by-case exceptions. The burden estimates in this Final Rule represent the incremental burden changes related only to increased reporting burden associated with the identification of new bulk electric system elements as a result of the modified definition. Furthermore, we acknowledge that NPCC may be subject to additional reporting requirements, however, the burden estimates are averages for all of the filers. Idaho Power's observation that the Commission is underestimating the number of engineering hours is not supported by analysis. Similarly, we are not persuaded by ISO New England's position that there may be a significant burden on planning coordinators and transmission planners associated with proposed definition because it does not offer any analysis to support this assertion. The Commission expects any burden for planning coordinators and transmission planners to be *de minimis* or incorporated under their existing responsibilities. In any event, Idaho Power and ISO New England did not provide any estimates of the number of hours that it would take to determine exceptions, nor suggest alternative estimates. In response to APPA's hourly estimates that are higher than the estimates in the NOPR the Commission notes that its hourly rate estimates for the burden estimates are averages for all of the filers and are based on national wage data for utilities obtained from the Bureau of Labor Statistics (for engineers and legal) and NPCC's assessment of Bulk Electric System Definition (for completing implementation plans and compliance), and Commission staff outreach (recordkeeping). Thus, the Commission adopts the burden estimates that it set forth in the NOPR.

327. The Commission disagrees with BPA that there may be a large number of exception requests generated from entities within its footprint that may have to be processed and the significant addition of FTEs. First, BPA has not provided any analysis or evidence to support its claim. Nevertheless, the Commission's expectation, like NERC's, is that application of the definition with its inclusions and exclusions should not materially change what is considered part of the bulk electric system today. Thus, the number of exception requests should not be excessive.

328. Some comments address the potential impact the requirements would have on small entities but did not provide specific estimates on this impact. Because these comments are also the subject of the analysis performed under the Regulatory Flexibility Act, the Commission has provided a response under that section of this rulemaking.

329. We are not persuaded by NYPSC and Massachusetts DPU that the costs for compliance will be $280 million. First, NYPSC nor Massachusetts do not dispute or address the specific information collection cost estimates in the NOPR. In addition, the vast majority (approximately $234 million) of the costs included in the report to which the commenters cite appear to be capital costs which are not applicable to an information collection estimate. Further, the report does not account for the revised language in the definition of bulk electric system and the specific inclusions and exclusions that we are approving in this Final Rule.

330. After consideration of comments, the Commission adopts the NOPR proposal for the Public Reporting Burden and the information collection costs as follows.

Requirement	Number and type of entity [223] (1)	Number of responses per entity (2)	Average number of hours per response (3)	Total burden hours (1)*(2)*(3)
System Review and List Creation [224].	333 Transmission Owners	1 response	80 (engineer hours)	26,640 Yr 1.
	843 Generator Owners		16 (engineer hours)	13,488 Yr 1.
	554 Distribution Providers		24 (engineer hours)	13,296 Yr 1.
Exception Requests [225]	1,730 total Transmission Owners, Generator Owners and Distribution Providers.	.260 responses each in Yrs 1 and 2. 20 responses in Yr 3 and ongoing.	94 (60 engineer hrs, 32 recordkeeping hrs, 2 legal hrs).	24,393 hrs in Yrs 1 and 2. 1,880 hrs in Yr 3 and ongoing.
Regional and ERO Handling of Exception Requests [226].	NERC and 8 Regional Entities.	1 response	1,386.67 hrs	12,480 hrs in Yrs 1 and 2.
Implementation Plans and Compliance [227].	111 NPCC Region Registered Entities [228].	1 response	700 hrs in Yrs 1 and 2 350 hrs in Yr 3 and ongoing.	77,700 hrs in Yrs 1 and 2. 38,850 hrs in Yr 3 and ongoing.
	75 Registered Entities from 7 other Regions.	1 response	700 hrs in Yrs 1 and 2 350 hrs in Yr 3 and ongoing.	52,500 hrs in Yrs 1 and 2. 26,250 hrs in Yr 3 and ongoing.
Totals				220,497 hrs in Yr 1. 167,073 hrs in Yr 2. 66,980 hrs in Yr 3 and ongoing.

Costs to Comply

- *Year 1:* $13,641,200.
- *Year 2:* $10,435,760.
- *Year 3 and ongoing:* $4,343,520.

For the first two burden categories above, the loaded (salary plus benefits) costs are: $60/hour for an engineer; $27/hour for recordkeeping; and $106/hour for legal. The breakdown of cost by item and year follows:

- *System Review and List Creation (year 1 only):* (26,640 hrs + 13,488 hrs + 13,296 hrs) =53,424 hrs * 60/hr = $3,205,440.
- *Exception Requests (years 1 and 2):* (sum of hourly expense per request * number of exception requests) = ((60 hrs * $60/hr) + (32 hrs * $27/hr) + (2hrs * $106/hr)) * 260 requests) = $1,215,760.
- *Exception Requests (year 3):* (sum of hourly expense per request * number of exception requests) = ((60 hrs * $60/hr) + (32 hrs * $27/hr) + (2 hrs * $106/hr)) * 20 requests) = $93,520.
- *Regional and ERO handling of Exception Requests:* Between NERC and Regional Entities we estimate 6 full time equivalent (FTE) engineers will be added at an annual cost of $120,000/FTE ($120,000/FTE * 6 FTE = $720,000). This cost is only expected in years 1 and 2.
- *Implementation Plans and Compliance* [229] *(years 1 and 2):* (hourly expense per entity * hours per response * sum of NPCC and non-NPCC entities) = ($64/hour * 700 hours per response * 186 responses) = $8,332,800.
- *Implementation Plans and Compliance (year 3 and beyond):* We estimate the ongoing cost for year 3 and beyond, at 50% of the year 1 and 2 costs, to be $4,166,400.

Title: FERC–725–J ''Definition of the Bulk Electric System''.[230]

Action: Proposed Collection of Information.

OMB Control No: 1902–0259.

Respondents: Business or other for profit, and not for profit institutions.

Frequency of Responses: On Occasion.

Necessity of the Information: The revision to NERC's definition of the term bulk electric system implements the Congressional mandate of the Energy Policy Act of 2005 to develop mandatory and enforceable Reliability Standards to better ensure the reliability of the nation's Bulk-Power System. Specifically, the revised definition ensures that certain facilities needed for the operation of the nation's bulk electric system are subject to mandatory and enforceable Reliability Standards.

Internal review: The Commission has reviewed the proposed definition and made a determination that its action is necessary to implement section 215 of the FPA. The Commission has assured itself, by means of its internal review, that there is specific, objective support for the burden estimate associated with the information requirements.

331. Interested persons may obtain information on the reporting requirements by contacting the Federal Energy Regulatory Commission, Office

[223] The ''entities'' listed in this table are describing a role a company is registered for in the NERC registry. For example, a single company may be registered as a transmission owner and generator owner. The total number of companies applicable to this rule is 1,522, based on the NERC registry. The total number of estimated roles is 1,730.

[224] This requirement corresponds to Step 1 of NERC's proposed transition plan, which requires each U.S. asset owner to apply the revised bulk electric system definition to all elements to determine if those elements are included in the bulk electric system pursuant to the revised definition. *See* NERC BES Petition at 38.

[225] We recognize that not all 1,730 transmission owners, generator owners, and distribution providers will submit an exception request. Rather, from the total 1,730 entities, we estimate an average of 260 requests per year in the first two years, based on a low to high range of 87 to 433 requests per year. Therefore, the estimated total number of hours per year for years 1 and 2, using an average of 260 requests per year, is 24,393 hours. We estimate 20 requests per year in year 3 and ongoing.

[226] Based on the assumption of two full-time equivalent employees added to NERC staff and 0.5 full-time equivalent employees added to each region's staff, each full-time equivalent at $120,000/year (salary + benefits).

[227] The Commission does not expect a significant number of registered entities outside of the NPCC region to identify new elements under the revised bulk electric system definition. NERC also states that the other Regional Entities do not expect an extensive amount of newly-included facilities. *See* NERC BES Petition at 38. ''Compliance'' refers to entities with new elements under the new bulk electric system definition required to comply with the data collection and retention requirements in certain Reliability Standards that they did not previously have to comply with.

[228] The estimated range of affected NPCC Region Registered Entities is from 66 to 155 entities.

[229] The cost and hourly burden calculations for this category are based on a past assessment (NPCC Assessment of Bulk Electric System Definition, September 14, 2009.). In that assessment NPCC indicated $8.9 million annually for operations, maintenance and additional costs. We estimated that roughly half of that cost actually relates to information collection burden. Using the resulting figure, we used a composite wage and benefit figure of $64/hour to estimate the hourly burden figures presented in the burden table.

[230] All of the information collection requirements for years 1–3 in the proposed rule are being accounted for under the new collection FERC–725J.

of the Executive Director, 888 First Street NE., Washington, DC 20426 [Attention: Ellen Brown, email: *DataClearance@ferc.gov,* phone: (202) 502–8663, fax: (202) 273–0873].

332. For submitting comments concerning the collection of information and the associated burden estimate, please send your comments to the Office of Management and Budget, Office of Information and Regulatory Affairs, Washington, DC 20503 [Attention: Desk Officer for the Federal Energy Regulatory Commission, phone: (202) 395–4718, fax: (202) 395–7285]. For security reasons, comments to OMB should be submitted by email to: *oira_submission@omb.eop.gov.* Comments submitted to OMB should include Docket Number RM12–6 and OMB Control Number 1902–0259.

IV. Regulatory Flexibility Act Analysis

333. The Regulatory Flexibility Act of 1980 (RFA) [231] generally requires a description and analysis of Proposed Rules that will have a significant economic impact on a substantial number of small entities. The RFA mandates consideration of regulatory alternatives that accomplish the stated objectives of a proposed rule and that minimize any significant economic impact on a substantial number of small entities. The Small Business Administration's (SBA) Office of Size Standards develops the numerical definition of a small business.[232] The SBA has established a size standard for electric utilities, stating that a firm is small if, including its affiliates, it is primarily engaged in the transmission, generation and/or distribution of electric energy for sale and its total electric output for the preceding twelve months did not exceed four million megawatt hours.[233]

NOPR Proposal

334. In the NOPR, the Commission estimated that approximately 418 of the 1,730 registered transmission owners, generator owners and distribution service providers may fall within the definition of small entities. Further, the Commission estimated that of the 418 small entities affected there are 50 within the NPCC region that would have to comply with the rulemaking. The Commission contemplated that the rulemaking would affect more small entities in the NPCC Region than those outside NPCC because there are more elements in the NPCC region that would be added to the bulk electric system based on the new definition than elsewhere. The Commission estimated the first year affect on small entities within the NPCC region to be $39,414.[234] This figure is based on information collection costs plus additional costs for compliance.[235] The Commission estimated the average annual affect per small entity outside of NPCC will be less than for the entities within NPCC. In the NOPR, the Commission stated that it did not consider this to be a significant economic impact for either class of entities because it should not represent a significant percentage of the operating budget.

Comments

335. APPA asserts that the Commission underestimates the costs of compliance for small utilities. According to APPA, the Commission's assumption that utility staff would conduct an analysis is not merited in the case of many small entities. APPA states that many of its smaller members do not have the in-house employees and resources to conduct such reliability analyses and would have to rely on outside consultants and legal firms. Therefore, APPA estimates that the fees small utilities would pay for each of the services as follows, based on information and belief: Consulting Engineer, $225/hour; Record Keeping, $75/hour; and Legal, $500/hour. According to APPA, these increased dollar estimates alone substantially increase the burden estimates on smaller utilities to comply with the Commission's proposals. WPPC believes that the cost to satisfy transmission owner/transmission operator certification alone would be $80,000. WPPC points to one small municipally-owned utility paid $40,000 for third party expertise and review of the utility's required compliance. WPPC adds that the municipality had two staff members spend a week reviewing a modifying city policies to ensure compliance with reliability standards. WPPC points out that these costs only represent the initial subject matter review and do not include subsequent implementation, training or material purchase costs. WPPC also states that small entities have to divert employees from other tasks to compliance tasks which represents a significant burden on staffing.

336. ISO New England does not believe that the NOPR cost estimate captures the cost of physical upgrades that might be necessary on the system. The cost estimates do not reflect the true financial burden that might be borne by these smaller entities.

337. BPA is concerned that the Commission is underestimating the costs and resources associated with reliability compliance. BPA disagrees with the Commission's estimated annual costs of $39,414 for entities that are required to newly comply with Reliability Standards as a result of adopting the definition. BPA believes that the Commission's figure vastly underestimates the actual effort and costs associated with compliance. In BPA's experience with its customers, the smallest customer impact is equivalent to at least one FTE, and larger customers have indicated they have an even higher burden. BPA asserts that the Commission's estimates also overlook indirect compliance costs and their impact on small and large entities alike. BPA disagrees with the Commission's conclusion that the compliance burden is not ''a significant economic impact * * * because it should not represent a significant percentage of the operating budget.'' It is BPA's experience that implementing a fully functioning compliance program requires committed personnel, budget, and resources, which is never insignificant.

Commission Determination

338. The Commission disagrees with commenters that challenge the Commission's conclusion that the rule will not have a significant economic impact on a substantial number of small entities. We are not persuaded by APPA, BPA and ISO New England's assertions regarding how the Commission's analysis is erroneous or in what ways the Final Rule will have a significant economic impact on a substantial number of small entities. As the Commission stated in its NOPR, most transmission owners, transmission operators and transmission service providers do not fall within the definition of small entities. In addition, the requirement to comply with the definition of bulk electric system is not new. The reason for revising the definition of bulk electric system is to comply with the Commission's directives and address the technical and policy concerns expressed in Order Nos. 743 and 743–A, which NERC

[231] 5 U.S.C. 601–612 (2006).

[232] 13 CFR 121.101.

[233] 13 CFR 121.201, Sector 22, Utilities & n.1.

[234] For companies registered as more than one entity in the NERC compliance registry this figure will increase accordingly. That is, if a company is registered as a transmission owner and generator owner then the cost burden would be $78,828 ($39,414 * 2 = $78,828).

[235] We use fifty percent of the first year ''number of hours per response'' figure in the information collection statement for calculation under the assumption that smaller entities do not have complicated systems or will not have as many new elements on average as larger entities do.

accomplished by eliminating the explicit basis of authority for Regional Entity discretion in the current definition, and establishing specific threshold criteria rather than general guidelines of facilities operated or connected at or above 100 kV. Thus, while the Commission recognizes that some small entities within the NPCC territory may have an increased burden due to multiple registration classifications or increased compliance with the Reliability Standards due to the elimination of the regional discretion, the average annual affect per small entity outside of NPCC will be less than for the entities within NPCC and should not materially change. The Commission also does not consider this to be a significant economic impact for either class of entities because our estimated costs for complying with the revised definition should not represent a significant percentage of the operating budget. Further, while NYPSC and Massachusetts DPU assert that the costs for compliance will be $280 million they make no specific reference to the cost for small businesses and, as noted above, their estimate does not account for the revised language in the definition of bulk electric system and the specific inclusions and exclusions that we are approving in this Final Rule. Accordingly, the Commission certifies that this Final Rule will not have a significant economic impact on a substantial number of small entities.

V. Environmental Analysis

339. The Commission is required to prepare an Environmental Assessment or an Environmental Impact Statement for any action that may have a significant adverse effect on the human environment.[236] The Commission has categorically excluded certain actions from this requirement as not having a significant effect on the human environment. The actions in this rule fall within the categorical exclusion in the Commission's regulations for rules that are clarifying, corrective or procedural, for information gathering, analysis, and dissemination.[237] Accordingly, neither an environmental impact statement nor environmental assessment is required.

VI. Document Availability

340. In addition to publishing the full text of this document in the **Federal Register**, the Commission provides all interested persons an opportunity to view and/or print the contents of this document via the Internet through FERC's Home Page (*http://www.ferc.gov*) and in FERC's Public Reference Room during normal business hours (8:30 a.m. to 5:00 p.m. Eastern time) at 888 First Street NE., Room 2A, Washington, DC 20426.

341. From FERC's Home Page on the Internet, this information is available on eLibrary. The full text of this document is available on eLibrary in PDF and Microsoft Word format for viewing, printing, and/or downloading. To access this document in eLibrary, type the docket number excluding the last three digits of this document in the docket number field.

342. User assistance is available for eLibrary and the FERC's Web site during normal business hours from FERC Online Support at (202) 502–6652 (toll free at 1–866–208–3676) or email at *ferc onlinesupport@ferc.gov,* or the Public Reference Room at (202) 502–8371, TTY (202) 502–8659. Email the Public Reference Room at *public. referencerom@ferc.gov.*

VII. Effective Date and Congressional Notification

343. These regulations are effective March 5, 2013. The Commission has determined, with the concurrence of the Administrator of the Office of Information and Regulatory Affairs of OMB, that this rule is not a ''major rule as defined in section 351 of the Small Business Regulatory Enforcement Fairness Act of 1996.

By the Commission. Commissioner Clark is not participating.

Nathaniel J. Davis, Sr.,

Deputy Secretary.

Note: Appendix A will not be published in the Code of Federal Regulations.

Appendix A—List of Commenters

American Electric Power Service Corporation (AEP)
American Municipal Power, Inc. (AMP)
American Public Power Association (APPA)
American Wind Energy Association (AWEA)
Arizona Public Service Company (Arizona Public Service)
Barrick Goldstrike Mines Inc. (Barrick)
Associated Electric Cooperative, Inc., Basin Electric Power Cooperative, Tri-State Generation and Transmission Association, Inc. (the G&T Cooperatives)
Bonneville Power Administration (BPA)
City of Alameda, California (Alameda)
City of Anaheim, California (Anaheim)
City of Redding, California (Redding)
City of Riverside, California (Riverside)
Cogeneration Association of California and the Energy Producers and Users Coalition
Consumers Energy Company (Consumers)
Dominion Resources Services, Inc. (Dominion)
Dow Chemical Company (Dow)
Duke Energy Corporation (Duke Energy)
Edison Electric Institute (EEI)
Electricity Consumers Resource Council (ELCON)
Exelon Corporation (Exelon)
Florida Reliability Coordinating Council, Midwest Reliability Organization, Northeast Power Coordinating Council, Inc., ReliabilityFirst Corporation, Southwest Power Pool Regional Entity, SERC Reliability Corporation, Texas Reliability Entity, Inc., Western Electricity Coordinating Council (the Regional Entities)
City of Holland, Michigan Board of Public Works (Holland)
Hydro One Networks Inc. and the Independent Electricity System Operator (Hydro One)
Hydro Quebec Transenergie (Hydro Quebec)
Idaho Power Company (Idaho Power)
Imperial Irrigation District (IID)
Industrial Customers of Northwest Utilities (ICNU)
Industrial Users of Utah (IUU)
International Transmission Company d/b/a ITC Transmission, Michigan Electric Transmission Company, LLC, ITC Midwest LLC and ITC Great Plains LLC (ITC)
ISO New England Inc. (ISO New England)
Kansas City Power & Light Company and KCP&L Greater Missouri (KCP&L)
Large Public Power Council (LPPC)
Massachusetts Department of Public Utilities (Massachusetts DPU)
Midwest Independent Transmission System Operator, Inc. (MISO)
MISO Transmission Owners
National Association of Regulatory Utility Commissioners (NARUC)
National Grid USA (National Grid)
National Rural Electric Cooperative Association (NRECA)
Nevada Power Company and Sierra Pacific Power Company (NV Energy)
New England States Committee on Electricity (NESCOE)
New York Independent System Operator, Inc. (NYISO)
New York State Public Service Commission (NYPSC)
North American Electric Reliability Corporation (NERC)
North Carolina Eastern Municipal Power Agency (''NCEMPA'') and North Carolina Municipal Power Agency Number 1 (''NCMPA1'') (together ''Power Agencies'')
Oglethorpe Power Corporation, Georgia Transmission Corporation and Georgia System Operations Corporation
Old Dominion Electric Cooperative (ODEC)
Occidental Energy Ventures Corp
Pennsylvania Public Utility Commission
Pepco Holdings, Inc., Potomac Electric Power Company, Delmarva Power & Light Company, Atlantic City Electric Company (PHI Companies)
Portland General Electric Company (Portland)
Public Service Electric and Gas Company, PSEG Power LLC, and PSEG Energy Resources & Trade LLC (PSEG Companies)
SmartSenseCom, Inc. (SmartSenseCom)
Snohomish County PUD No. 1 (Snohomish)
Southern California Edison Company (SoCal Edison)

[236] *Regulations Implementing the National Environmental Policy Act,* Order No. 486, 52 FR 47897 (Dec. 17, 1987), FERC Stats. & Regs. Regulations Preambles 1986–1990 ¶ 30,783 (1987).

[237] 18 CFR 380.4(a)(5).

Southern Company Services, Inc. (Southern Companies)
Springfield Utility Board (Springfield)
Steel Manufacturers Association
Transmission Access Policy Study Group (TAPS)
Utility Services, Inc.
Valero Services, Inc (Valero)
Western Public Power Coalition (WPPC)
White River Electric Association, Inc. (WREA)

[FR Doc. 2012–31142 Filed 1–3–13; 8:45 am]

BILLING CODE 6717–01–P