Rules and Regulations

Federal Register
Vol. 77, No. 186
Tuesday, September 25, 2012

This section of the FEDERAL REGISTER contains regulatory documents having general applicability and legal effect, most of which are keyed to and codified in the Code of Federal Regulations, which is published under 50 titles pursuant to 44 U.S.C. 1510.

The Code of Federal Regulations is sold by the Superintendent of Documents. Prices of new books are listed in the first FEDERAL REGISTER issue of each week.

DEPARTMENT OF TRANSPORTATION

Federal Aviation Administration

14 CFR Part 39

[Docket No. FAA–2012–1018; Directorate Identifier 2011–SW–052–AD; Amendment 39–17204; AD 2012–19–09]

RIN 2120–AA64

Airworthiness Directives; Eurocopter France Helicopters

AGENCY: Federal Aviation Administration (FAA), Department of Transportation (DOT).

ACTION: Final rule; request for comments.

SUMMARY: We are adopting a new airworthiness directive (AD) for Eurocopter France (Eurocopter) Model EC 155B, EC155B1, SA–365N1, AS–365N2 and AS 365 N3 helicopters to require visually inspecting the tail rotor hub (TRH) for a crack and removing the TRH if a crack exists. This AD is prompted by reports of cracks on two TRHs. These actions are intended to prevent the tail rotor from jamming, which could lead to reduced or loss of control of the helicopter.

DATES: This AD becomes effective October 10, 2012.

We must receive comments on this AD by November 26, 2012.

ADDRESSES: You may send comments by any of the following methods:

- *Federal eRulemaking Docket:* Go to *http://www.regulations.gov*. Follow the online instructions for sending your comments electronically.
- *Fax:* 202–493–2251.
- *Mail:* Send comments to the U.S. Department of Transportation, Docket Operations, M–30, West Building Ground Floor, Room W12–140, 1200 New Jersey Avenue SE., Washington, DC 20590–0001.
- *Hand Delivery:* Deliver to the ''Mail'' address between 9 a.m. and 5 p.m., Monday through Friday, except Federal holidays.

Examining the AD Docket: You may examine the AD docket on the Internet at *http://www.regulations.gov* or in person at the Docket Operations Office between 9 a.m. and 5 p.m., Monday through Friday, except Federal holidays. The AD docket contains this AD, the economic evaluation, any comments received, and other information. The street address for the Docket Operations Office (telephone 800- 647–5527) is in the **ADDRESSES** section. Comments will be available in the AD docket shortly after receipt.

For service information identified in this AD, contact American Eurocopter Corporation, 2701 N. Forum Drive, Grand Prairie, TX 75052; telephone (972) 641–0000 or (800) 232–0323; fax (972) 641–3775; or at *http://www.eurocopter.com/techpub*. You may review the referenced service information at the FAA, Office of the Regional Counsel, Southwest Region, 2601 Meacham Blvd., Room 663, Fort Worth, Texas 76137.

FOR FURTHER INFORMATION CONTACT: Robert Grant, Aviation Safety Engineer, Standards Staff, Rotorcraft Directorate, FAA, 2601 Meacham Blvd., Fort Worth, Texas 76137; telephone 817–222–5328; email *robert.grant@faa.gov*.

SUPPLEMENTARY INFORMATION:

Comments Invited

This AD is a final rule that involves requirements affecting flight safety, and we did not provide you with notice and an opportunity to provide your comments prior to it becoming effective. However, we invite you to participate in this rulemaking by submitting written comments, data, or views. We also invite comments relating to the economic, environmental, energy, or federalism impacts that resulted from adopting this AD. The most helpful comments reference a specific portion of the AD, explain the reason for any recommended change, and include supporting data. To ensure the docket does not contain duplicate comments, commenters should send only one copy of written comments, or if comments are filed electronically, commenters should submit them only one time. We will file in the docket all comments that we receive, as well as a report summarizing each substantive public contact with FAA personnel concerning this rulemaking during the comment period. We will consider all the comments we receive and may conduct additional rulemaking based on those comments.

Discussion

We are adopting a new AD for Eurocopter EC 155B, EC155B1, SA–365N1, AS–365N2 and AS 365 N3 helicopters. Eurocopter reported that a technician found cracks on the TRH during an inspection of a Model AS–365 helicopter equipped with a 10-blade TRH. This AD requires repetitive visual inspections of the TRH for a crack. Eurocopter initially required a visual inspection of the TRH every 110 hours, but reduced that requirement to 55 flight hours after cracks were found on a second hub. Eurocopter is investigating the cause of the cracks.

The European Aviation Safety Agency (EASA), which is the Technical Agent for the Member States of the European Union, has issued EASA AD No. 2011–0144, dated July 26, 2011, to correct this unsafe condition for Eurocopter Model EC 155B, EC155B1, SA–365N1, AS–365N2 and AS 365 N3 helicopters. EASA states that if a TRH crack is not detected and corrected, the tail rotor could jam, leading to a reduction or loss of control of the helicopter. Pending further investigation, the EASA AD requires repetitive inspections of the TRH every 55 flight hours. EASA considers the actions in its AD to be interim measures and expects further AD actions will follow.

FAA's Determination

These helicopters have been approved by the aviation authority of France and are approved for operation in the United States. Pursuant to our bilateral agreement with France, EASA, its technical representative, has notified us of the unsafe condition described in the EASA AD. We are issuing this AD because we evaluated all information provided by EASA and determined the unsafe condition exists and is likely to exist or develop on other helicopters of these same type designs.

Related Service Information

Following the report of cracks found on the TRH of a Model AS–365 helicopter, Eurocopter issued Alert Service Bulletin (ASB) No. EC 155–05A021, Revision 0, dated April 11, 2011, for Model EC 155B and EC155B1 helicopters, and ASB No. AS365–

05.00.60, Revision 0, dated April 11, 2011, for Model SA–365N1, AS–365N2 and AS 365 N3 and some military helicopters. After a second report of TRH cracks, the ASBs were revised, dated July 20, 2011, to mandate and reduce the repetitive inspection interval from 110 flight hours to 55 flight hours.

The ASBs call for visually inspecting the TRH for cracks and, if cracks are found, removing the TRH. EASA classified these ASBs as mandatory and issued AD No. 2011–0144 to ensure the continued airworthiness of these helicopters.

AD Requirements

This AD requires visually inspecting the TRH for a crack within 55 hours time in service (TIS) and, if a crack exists, removing the TRH from service. This inspection must be repeated at intervals not to exceed 55 hours TIS.

Interim Action

We consider this AD to be an interim action because Eurocopter is investigating the cause of TRH cracks. If a final action is later identified, we might consider additional rulemaking.

Costs of Compliance

We estimate that this AD will affect 34 helicopters of U.S. Registry and that labor costs will average $85 a work-hour. We expect that it will take 1 work-hour to visually inspect the TRH for a crack, and that helicopters will average 5 inspections per year. Thus, we estimate a total annual cost of $425 per helicopter, and $14,450 for the U.S. operator fleet.

FAA's Justification and Determination of the Effective Date

Providing an opportunity for public comments prior to adopting these AD requirements would delay implementing the safety actions needed to correct this known unsafe condition. Therefore, we find that the risk to the flying public justifies waiving notice and comment prior to the adoption of this rule, because the required corrective actions must be accomplished within 55 hours TIS, a very short time period based on the average utilization rate of the highest usage helicopter model.

Since an unsafe condition exists that requires the immediate adoption of this AD, we determined that notice and opportunity for public comment before issuing this AD are impractical and contrary to the public interest and that good cause exists for making this amendment effective in less than 30 days.

Authority for This Rulemaking

Title 49 of the United States Code specifies the FAA's authority to issue rules on aviation safety. Subtitle I, section 106, describes the authority of the FAA Administrator. ''Subtitle VII: Aviation Programs,'' describes in more detail the scope of the Agency's authority.

We are issuing this rulemaking under the authority described in ''Subtitle VII, Part A, Subpart III, Section 44701: General requirements.'' Under that section, Congress charges the FAA with promoting safe flight of civil aircraft in air commerce by prescribing regulations for practices, methods, and procedures the Administrator finds necessary for safety in air commerce. This regulation is within the scope of that authority because it addresses an unsafe condition that is likely to exist or develop on products identified in this rulemaking action.

Regulatory Findings

We determined that this AD will not have federalism implications under Executive Order 13132. This AD will not have a substantial direct effect on the States, on the relationship between the national Government and the States, or on the distribution of power and responsibilities among the various levels of government.

For the reasons discussed, I certify that this AD:

1. Is not a ''significant regulatory action'' under Executive Order 12866;
2. Is not a ''significant rule'' under DOT Regulatory Policies and Procedures (44 FR 11034, February 26, 1979);
3. Will not affect intrastate aviation in Alaska to the extent that it justifies making a regulatory distinction; and
4. Will not have a significant economic impact, positive or negative, on a substantial number of small entities under the criteria of the Regulatory Flexibility Act.

We prepared an economic evaluation of the estimated costs to comply with this AD and placed it in the AD docket.

List of Subjects in 14 CFR Part 39

Air transportation, Aircraft, Aviation safety, Incorporation by reference, Safety.

Adoption of the Amendment

Accordingly, under the authority delegated to me by the Administrator, the FAA amends 14 CFR part 39 as follows:

PART 39—AIRWORTHINESS DIRECTIVES

■ 1. The authority citation for part 39 continues to read as follows:

Authority: 49 U.S.C. 106(g), 40113, 44701.

§ 39.13 [Amended]

■ 2. The FAA amends § 39.13 by adding the following new airworthiness directive (AD):

2012–19–09 Eurocopter Helicopters: Amendment 39–17204; Docket No. FAA–2012–1018; Directorate Identifier 2011–SW–052–AD.

(a) Applicability

This AD applies to Eurocopter Model EC 155B, EC155B1, SA–365N1, AS–365N2 and AS 365 N3 helicopters, with a tail rotor hub (TRH) part number 365A33351100, 365A33351101, or 365A33351102 installed, certificated in any category.

(b) Unsafe Condition

This AD defines the unsafe condition as a crack in the TRH that could lead to a tail rotor jam, and subsequent reduced or loss of control of the helicopter.

(c) Effective Date

This AD becomes effective October 10, 2012.

(d) Compliance

You are responsible for performing each action required by this AD within the specified compliance time.

(e) Required Actions

(1) Within 55 hours time-in-service (TIS), and thereafter at intervals not to exceed 55 hours TIS, using a light, visually inspect the TRH for a crack in the entire area shown as Area C of the TRH (a) in Figure 1 to paragraph (e)(1) of this AD. The inspection area is on the tail gearbox (TGB) side of the TRH. The TGB is shown as (c) in Figures 2 and 3 to paragraph (e)(1) of this AD. You must pay particular attention to the area around the screws, shown as (e) in Figure 3 to paragraph (e)(1) of this AD, and the TRH between the lower part of the TGB and its fairing, shown as (d) in Figures 2 and 3 to paragraph (e)(1) of this AD, using details D and E of Figure 3 to paragraph (e)(1) of this AD. You must turn the tail rotor by hand to inspect the entire Area C.

BILLING CODE 4910–13–P

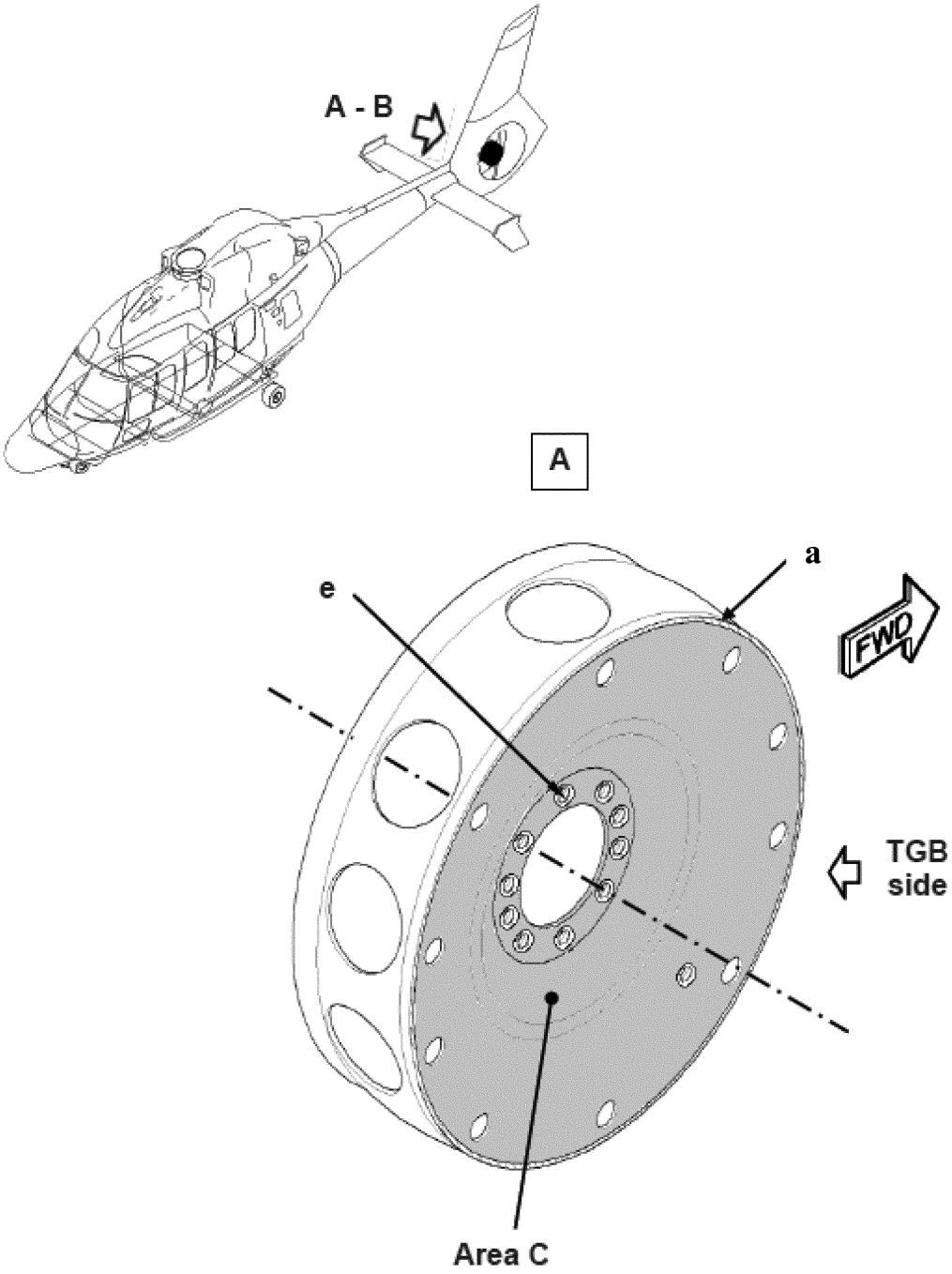

Figure 1 to Paragraph (e)(1) TRH Hub

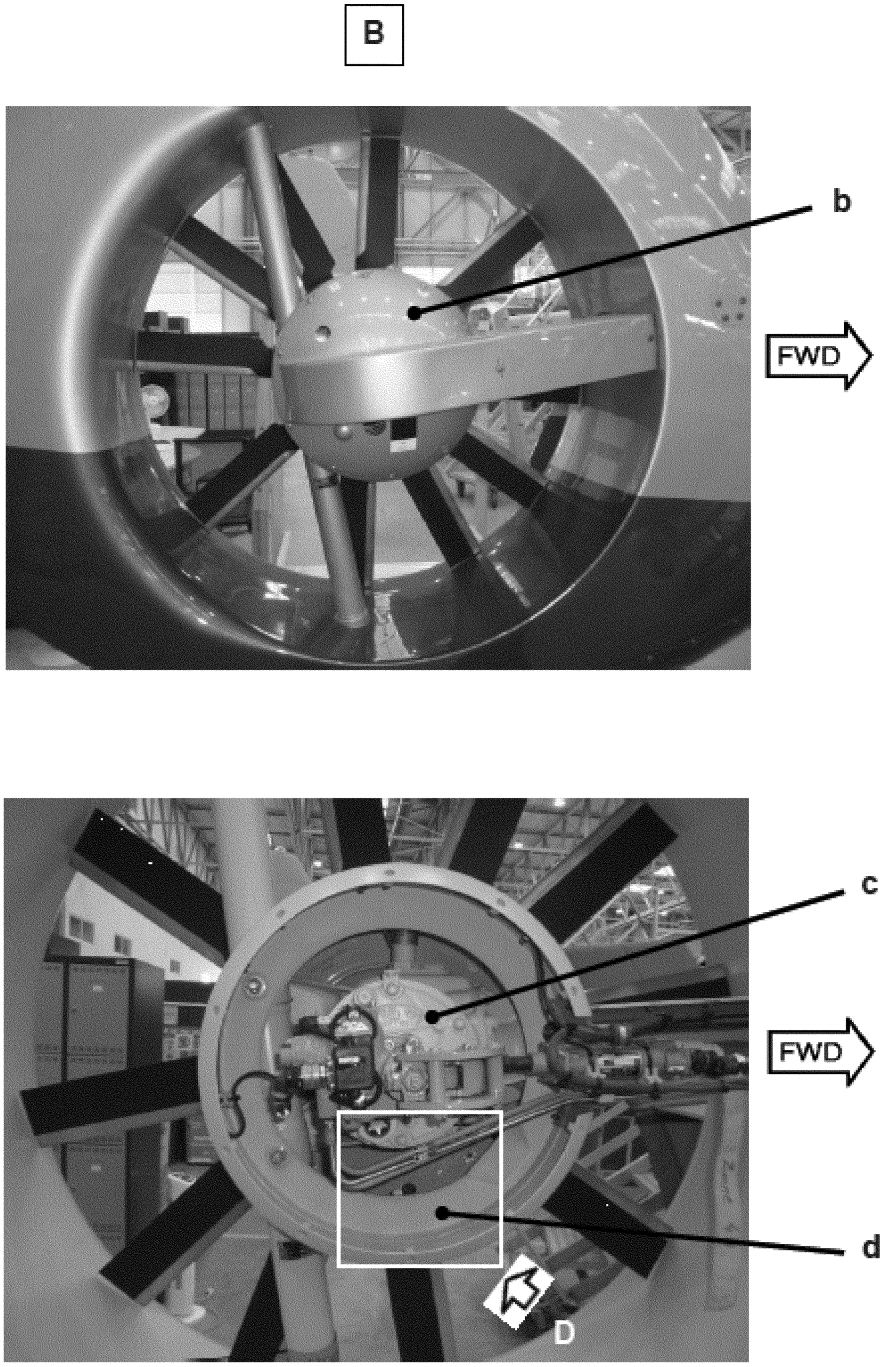

Figure 2 to Paragraph (e)(1) Location of the area to be inspected (Area C)

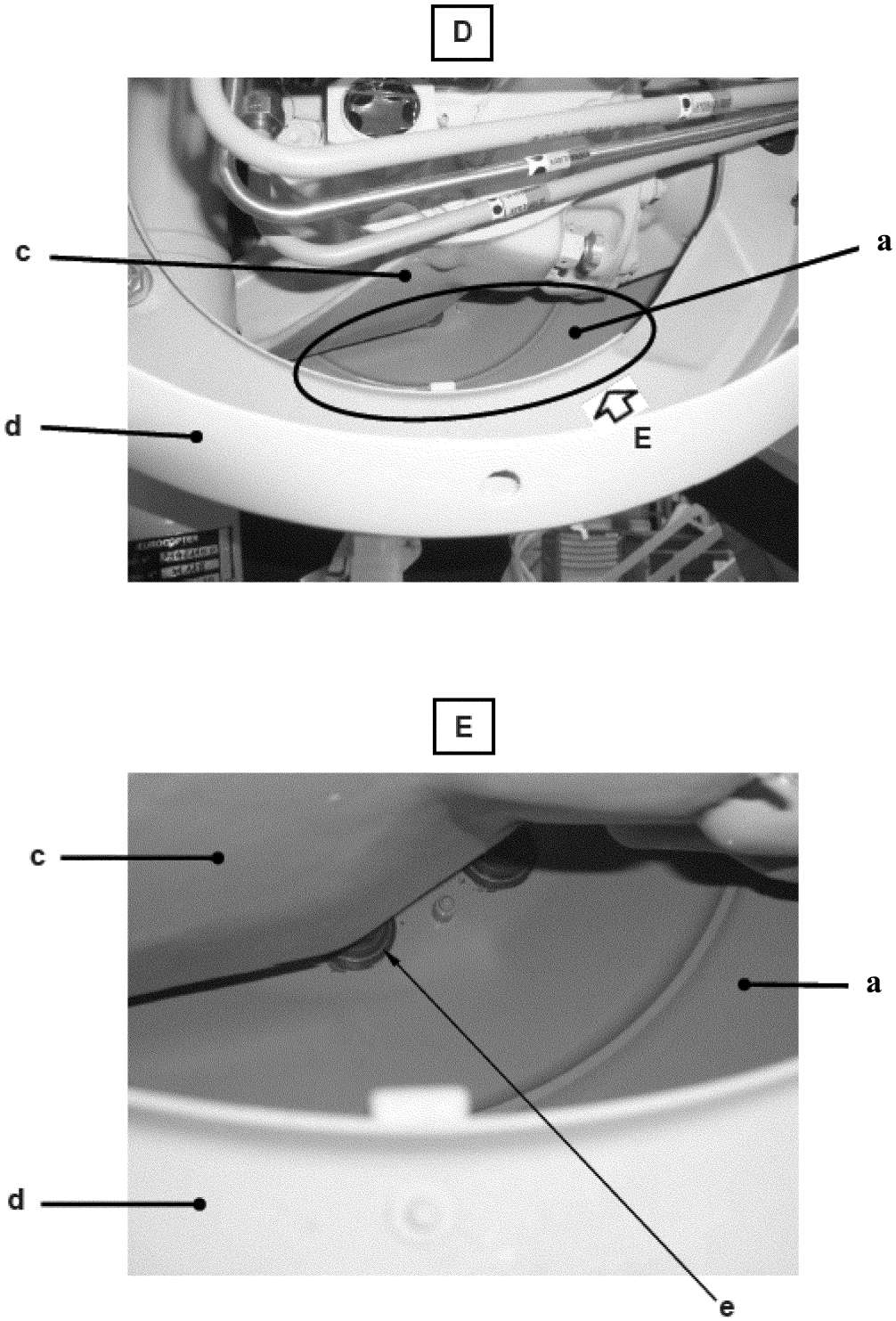

Figure 3 to Paragraph (e)(1) Visual Inspection of Area C

(2) If there is a crack on the TRH, remove the TRH from service.

(f) Special Flight Permits

No special flight permits will be permitted.

(g) Alternative Methods of Compliance (AMOCs)

(1) The Manager, Safety Management Group, FAA, may approve AMOCs for this AD. Send your proposal to: Robert Grant, Aviation Safety Engineer, Standards Staff, Rotorcraft Directorate, FAA, 2601 Meacham Blvd., Fort Worth, Texas 76137; telephone 817–222–5328; email *robert.grant@faa.gov*.

(2) For operations conducted under a 14 CFR part 119 operating certificate or under 14 CFR part 91, subpart K, we suggest that you notify your principal inspector, or lacking a principal inspector, the manager of the local flight standards district office or

certificate holding district office, before operating any aircraft complying with this AD through an AMOC.

(h) Additional Information

(1) Eurocopter Alert Service Bulletin (ASB) No. AS365–05.00.60, Revision 1, dated July 20, 2011, and Eurocopter ASB No. EC 155–05A021, Revision 1, dated July 20, 2011, which are not incorporated by reference, contain additional information about the subject of this AD. For service information identified in this AD, contact American Eurocopter Corporation, 2701 N. Forum Drive, Grand Prairie, TX 75052; telephone (972) 641–0000 or (800) 232–0323; fax (972) 641–3775; or at *http://www.eurocopter.com/techpub*. You may review a copy of the service information at the FAA, Office of the Regional Counsel, Southwest Region, 2601 Meacham Blvd., Room 663, Fort Worth, Texas 76137.

(2) The subject of this AD is addressed in European Aviation Safety Agency (EASA) AD No. 2011–0144, dated July 26, 2011.

(i) Subject

Joint Aircraft Service Component (JASC) Code: 6420, Tail Rotor Head.

Issued in Fort Worth, Texas, on September 14, 2012.

Lance T. Gant,

Acting Manager, Rotorcraft Directorate, Aircraft Certification Service.

[FR Doc. 2012–23448 Filed 9–24–12; 8:45 am]

BILLING CODE 4910–13–P

DEPARTMENT OF COMMERCE

National Oceanic and Atmospheric Administration

15 CFR Part 902

50 CFR Part 660

[Docket No. 120614172–2395–01]

RIN 0648–BC29

Fisheries Off West Coast States; West Coast Salmon Fisheries; Announcing OMB Approval of Information Collection

AGENCY: National Marine Fisheries Service (NMFS), National Oceanic and Atmospheric Administration (NOAA), Commerce.

ACTION: Final rule; effective date of OMB control numbers.

SUMMARY: This rule provides notice of the approval by the Office of Management and Budget (OMB) and resulting effectiveness of the collection-of-information requirements published by NMFS on July 2, 1996. OMB approved the collection-of-information requirements in April 2001, and extended that approval in September 2001, November 2004, April 2008, and July 2011.

DATES: The amendments in this rule are effective October 25, 2012. The collection-of-information requirements in § 660.404, published on July 2, 1996 (61 FR 34570), are effective October 25, 2012. OMB approves the collection-of-information requirements in § 660.408, published on July 2, 1996 (61 FR 34570), as of October 25, 2012.

ADDRESSES: This final rule is also accessible on the Web site of NMFS' Northwest Region (*http://www.nwr.noaa.gov*). Written comments regarding the burden-hour estimates or other aspects of the collection-of-information requirements contained in this final rule may be submitted to William W. Stelle, Jr., Regional Administrator, Northwest Region, NMFS, 7600 Sand Point Way NE., Seattle, WA 98115–0070.

FOR FURTHER INFORMATION CONTACT: Peggy Mundy, Northwest Region Salmon Management Division, NMFS, 206–526–4323.

SUPPLEMENTARY INFORMATION: NMFS published a final rule on July 2, 1996 (61 FR 34570) that consolidated several parts of the Code of Federal Regulations (CFR) into a new CFR part 660 containing regulations for implementing management measures for fisheries operating in the exclusive economic zone (EEZ) off West Coast states. This new part 660 included a collection of information associated with recordkeeping and reporting requirements regulations at § 660.404 and § 660.408(o). This collection was previously associated with regulations at § 661.4 and § 661.20, under OMB control number 0648–0222. The 1996 rule stated that OMB approval under control number 0648–0222 had expired and that NMFS was in the process of obtaining OMB approval for the collection of information under the new regulations.

This final rule announces OMB approval and effectiveness of the collection of information associated with regulations at § 660.404 and § 660.408(o). Initial approval of these regulations in their current location in the Code of Federal regulations occurred on April 25, 2001 under OMB control number 048–0433. OMB extended this approval on September 28, 2001, November 29, 2004, April 8, 2008, and July 8, 2011. The current approval expires on July 31, 2014.

Classification

This rule makes effective a collection of information requirement subject to the Paperwork Reduction Act. The collection of this information has been approved by the Office of Management and Budget (OMB) under OMB Control Number 0648–433. Based on the management regime specified each year, designated regulatory areas in the commercial ocean salmon fishery off the coasts of Washington, Oregon, and California may be managed by numerical quotas. To accurately assess catches relative to quota attainment during the fishing season, catch data by regulatory area must be collected in a timely manner. The requirements to land salmon within specific time frames and in specific areas may be implemented in the preseason regulations to aid in timely and accurate catch accounting for a regulatory area. State landing systems normally gather the data at the time of landing. If unsafe weather conditions or mechanical problems prevent compliance with landing requirements, fishermen need an alternative to allow for a safe response. Fishermen would be exempt from landing requirements if the appropriate notifications are made to provide the name of the vessel, the port where delivery will be made, the approximate amount of salmon (by species) on board, and the estimated time of arrival. These reports are generally made via at-sea radio, cellular phone transmissions, or other electronic communication. The annual reporting burden to the public is estimated at 10 hours, based on an estimated 15 minutes per response.

Pursuant to 5 U.S.C. 553(b)(B), there is good cause to waive prior notice and opportunity for public comment for this action because notice and comment would be unnecessary and contrary to the public interest. This action simply provides notice of OMB's approval of the reporting requirements at issue, which has already occurred, and renders those requirements effective. Thus this action does not involve any further exercise of agency discretion and no comment received at this time would impact any decision by NOAA or OMB. In addition, the public has had the opportunity to comment on both the substance of the reporting requirements, at the time NOAA adopted them, and on NOAA's requests for extension of OMB's approval. The reporting requirements at issue were detailed in proposed rules on which NOAA accepted public comment. The reporting provisions in 50 CFR 660.404(a) were initially published at 49 FR 32414–01 (August 14, 1984), with comments accepted until September 21, 1984, and published as a final rule at 49 FR 43679–02 (October 31, 1984). The