AUTHENTICATED
U.S. GOVERNMENT
INFORMATION
GPO

FEDERAL REGISTER

Vol. 77 Friday,
No. 165 August 24, 2012

Part III

Department of Transportation

National Highway Traffic Safety Administration

49 CFR Part 571

Federal Motor Vehicle Safety Standards; Motorcycle Brake Systems; Final Rule

DEPARTMENT OF TRANSPORTATION

National Highway Traffic Safety Administration

49 CFR Part 571

[Docket No. NHTSA–2012–0123]

RIN 2127–AK16

Federal Motor Vehicle Safety Standards; Motorcycle Brake Systems

AGENCY: National Highway Traffic Safety Administration, Department of Transportation (NHTSA).

ACTION: Final rule.

SUMMARY: This final rule amends the Federal motor vehicle safety standard (FMVSS) on motorcycle brake systems to add and update requirements and test procedures and to harmonize with a global technical regulation (GTR) for motorcycle brakes. The GTR was developed under the United Nations 1998 Global Agreement with the U.S. as an active participant, and it was derived from various motorcycle braking regulations from around the world, including the U.S. motorcycle brake systems standard. This final rule includes numerous modifications to the test procedures for motorcycle brake systems, but does not change the scope, applicability, and safety purpose of the motorcycle brake systems FMVSS.

DATES: This final rule is effective October 23, 2012. Petitions for reconsideration must be received by October 9, 2012.

The various compliance dates for these regulations are set forth, as applicable, in § 571.122, S3. Optional early compliance is permitted on and after October 23, 2012.

The incorporation by reference of certain publications listed in this rule is approved by the Director of the Federal Register as of October 23, 2012.

ADDRESSES: Petitions for reconsideration must be submitted to: Administrator, National Highway Traffic Safety Administration, 1200 New Jersey Avenue SE., Washington, DC 20590.

FOR FURTHER INFORMATION CONTACT:

For technical issues: Mr. George Soodoo, Division Chief, Vehicle Dynamics (NVS–122), Office of Crash Avoidance Standards (Email: *george.soodoo@dot.gov*) (Telephone: (202) 366–2720) (Fax: (202) 366–5930) or Mr. Ezana Wondimneh, Division Chief, International Policy and Harmonization (NVS–133), Office of International Policy, Fuel Economy and Consumer Programs (Email: *ezana.wondimneh@dot.gov*) (Telephone: (202) 366–0846) (Fax: (202) 493–2290).

For legal issues: Mr. David Jasinski, Office of the Chief Counsel (NCC–112) (Email: *david.jasinski@dot.gov*) (Telephone: (202) 366–2992) (Fax: (202) 366–3820).

You may send mail to these officials at National Highway Traffic Safety Administration, 1200 New Jersey Avenue SE., Washington, DC 20590.

SUPPLEMENTARY INFORMATION:

Table of Contents

I. Executive Summary
II. Background
A. Current Requirements of FMVSS No. 122
B. Harmonization Efforts
C. Comments Received in Response to the Notice of Proposed Rulemaking
III. General Improvements to FMVSS No. 122
A. New Terminology
B. Measurement of Performance Using Stopping Distance
C. Motorcycle Test Speed and Corrected Stopping Distance
D. Peak Braking Coefficient
E. Test Sequence
F. Brake Application Force Measurement
G. Brake Temperature Measurement
H. Burnishing Procedure
I. Notice of Wear
IV. Specific Performance Test Improvements to FMVSS No. 122
A. Dry Stop Test—Single Brake Control Actuated
B. Dry Stop Test—All Service Brake Controls Actuated
C. High-Speed Test
D. Wet Brake Test
E. Heat Fade Test
F. Parking Brake System Test
G. Antilock Brake System (ABS) Performance Test
1. Low Friction Surface for ABS Testing
2. Wheel Lock
3. Tests With ABS Electrical Failure
4. Other ABS-Related Comments
H. Partial Failure Test—Split Service Brake System
I. Power-Assisted Braking System Failure Test
V. Other Comments and Technical Amendments
A. Labeling Requirements
B. Versions of ASTM Standards
C. Terminology
VI. Compliance Date
VII. Costs and Benefits
VIII. Regulatory Analyses and Notices

I. Executive Summary

Currently, motorcycles must comply with a series of performance requirements established in Federal Motor Vehicle Safety Standard (FMVSS) No. 122, *Motorcycle Brake Systems,* in the early 1970's. While the current motorcycle brake performance requirements have ensured a minimum level of braking performance, they have not kept pace with the advancement of modern technologies. The National Highway Traffic Safety Administration (NHTSA) seeks to keep its standards up to date. This final rule updates FMVSS No. 122 based on the Motorcycle Brake Systems Global Technical Regulation (GTR), which reflects the capabilities of current in-use technologies. Updating the standard to reflect modern technologies would help prevent the introduction of unsafe motorcycle brake systems on the road. Moreover, benefits from harmonization, including decreased testing costs and ease of market entry, would accrue to current and new manufacturers, and would in turn get passed on to consumers.

The substantive performance tests and requirements of FMVSS No. 122 have not been updated since their adoption in 1972. Since that time, motorcycle brake system technology has significantly changed and improved such that FMVSS No. 122 no longer reflects the current performance of motorcycle brake system technologies. In order to address modern braking technologies, the agency sought to improve the requirements and test procedures of FMVSS No. 122. These efforts coincided with the 2002 adoption of the initial Program of Work under the 1998 United Nations' Economic Commission for Europe (UNECE) Agreement Concerning the Establishment of Global and Technical Regulations for Wheeled Vehicles, Equipment and Parts Which Can Be Fitted And/or Be Used On Wheeled Vehicles (1998 Agreement).[1] That program included motorcycle brake systems as one of the promising areas for the establishment of a GTR. The agency sought to work collaboratively on modernizing motorcycle brake regulations with other Contracting Parties to the 1998 Agreement (Contracting Parties), particularly Canada, the European Union and Japan. Through the exchange of information on ongoing research and testing and through the leveraging of resources for testing and evaluations, the agency participated in successful efforts that culminated in the establishment of the Motorcycle Brake Systems GTR under

[1] The 1998 UNECE Agreement Concerning the Establishment of Global and Technical Regulations for Wheeled Vehicles, Equipment and Parts Which Can Be Fitted And/or Be Used On Wheeled Vehicles (1998 Agreement) was concluded under the auspices of the United Nations and provides for the establishment of globally harmonized vehicle regulations. This 1998 Agreement, whose conclusion was spearheaded by the United States, entered into force in 2000 and is administered by the UNECE's World Forum for the Harmonization of Vehicle Regulations (WP.29). *See http://www.unece.org/trans/main/wp29/wp29wgs/wp29gen/wp29age.html* (last accessed September 28, 2011).

the 1998 Agreement. We believe that the provisions of the GTR NHTSA is adopting in today's final rule will improve the current requirements and test procedures of FMVSS No. 122 by updating them to more closely reflect the capabilities of modern technologies that are already being used in most motorcycles sold in the U.S.

This final rule makes improvements to FMVSS No. 122, but retains many fundamental elements of the current standard. For example, this final rule adopts new terminology and includes definitions for terms used in the regulatory text, including adopting five categories for motorcycles based on the number of wheels and maximum speed of the motorcycle. This final rule retains stopping distance as the sole compliance criterion for several performance tests in FMVSS No. 122. The current FMVSS No. 122 is improved by specifying a tolerance for the initial test speed for compliance tests, recognizing that even professional test drivers cannot attain the exact speed specified in every test. This final rule incorporates by reference an ASTM International method for the measurement of the coefficient of friction of the test surface that is already used in NHTSA's other brake standards. This final rule, like the existing version of FMVSS No. 122, specifies the order in which NHTSA will conduct its compliance tests, but it moves the brake fade test to the end of the test sequence in order to eliminate a re-burnishing procedure, resulting in a more efficient test sequence. The procedure for the initial burnish is retained with minor alteration.

The rule includes several tests that would enhance the safe operation of a motorcycle: Tests both at gross vehicle weight rating (GVWR) and lightly loaded vehicle weight, which ensure adequate braking performance at the two extremes of the loading conditions; a wet brake test that is more representative of the manner in which brakes are wetted during real world riding in wet conditions; a variety of ABS performance tests to ensure that motorcycles equipped with ABS have adequate antilock performance during emergency braking or on slippery road conditions; and a new requirement that addresses failure in the power-assisted braking system.

Specifically, the rule will improve the FMVSS No. 122 requirements in several areas. First, it will make the dry brake test requirement more stringent by specifying testing of each service brake control individually, with the motorcycle in the fully loaded condition. Second, the rule will implement a more stringent high speed test requirement by specifying a slightly higher rate of deceleration. Third, the rule replaces the existing wet brake test with one that better simulates actual in-service conditions, by spraying water onto the brake disc, instead of submerging the brake system before testing. Fourth, the rule specifies an improved heat fade test procedure based on European and Japanese national regulations, which share the same test procedure and performance requirements. Fifth, the rule specifies performance requirements for antilock brake systems (ABS), if present. Until now, FMVSS No. 122 did not contain performance criteria for ABS, where present on motorcycles.[2] Finally, the rule contains a new test requirement to evaluate the motorcycle's performance in the event of a failure in the power-assisted braking system, if so equipped.

This final rule responds to public comments on the notice of proposed rulemaking[3] (NPRM) and adopts the requirements, test procedures, and performance criteria of the NPRM without significant deviations from the proposal.

Notably, we have retained labeling requirements for brake systems components that were in FMVSS No. 122, but were not in the GTR. NHTSA feels strongly that those required labels identify important safety features and safety-related information, and they have longstanding applicability in FMVSS No. 122. The parties involved in developing the GTR understood that national regulations would continue to apply labeling and warning requirements of this sort when each national regulatory body adopted the provisions of the GTR. Since the vast majority of benefits from harmonization are achieved because of the harmonization of test procedures and performance criteria, the retention of unique FMVSS No. 122 labeling requirements does not reduce the benefits of international harmonization.

Besides updating requirements and test procedures to help ensure the safety of motorcycle brake systems, today's final rule also provides benefits from harmonization. Motorcycle manufacturers, and ultimately, consumers, both here and abroad, can expect to achieve cost savings through the formal harmonization of differing sets of standards when the Contracting Parties implement the new GTR. Motorcycles are vehicles that are prepared for the world market. It will be more economically efficient to have manufacturers using the same test procedures and meeting the same performance requirements worldwide. This rule will help achieve these benefits and thus reduce the amount of resources utilized to test motorcycles.

Although this final rule adds and updates FMVSS No. 122 performance requirements and provides benefits from harmonization, we anticipate that virtually all motorcycles currently sold in the U.S. can meet the requirements, without the need for any changes to their brake systems. Thus, we are not able to quantify direct safety benefits from this final rule.

We have considered whether this final rule will impose additional costs on manufacturers, including costs associated with certifying motorcycles as compliant with these new tests. We expect that a limited number (approximately 8,000) of three-wheeled motorcycles will require upgraded brake systems at a cost of $13.38 per motorcycle. As a result, the total cost motorcycle manufacturers will incur as a result of today's final rule is approximately $107,040 per year. All costs that manufacturers may incur if they choose to certify compliance based on NHTSA's test procedures will be offset by cost savings from the elimination of test procedures under the current version of FMVSS No. 122. For those manufacturers that choose to certify compliance by following NHTSA's test procedures, we anticipate that this final rule would result in a cost savings of less than one-tenth of a cent per motorcycle.

While the agency has not been able to quantify safety benefits for this rule since virtually all motorcycles sold in the U.S. can currently meet the proposed requirements, the agency is considering taking several other actions to attempt to decrease motorcycle fatalities.[4] Given the sources and magnitude of the safety problem posed by increased motorcycle fatalities, the Department of Transportation intends to address motorcycle safety

[2] Note, though, that we are not mandating in this rule that motorcycles be equipped with ABS brakes.

[3] *See Federal Motor Vehicle Safety Standards, Motorcycle Brake Systems, Notice of Proposed Rulemaking,* 73 FR 54020 (Sept. 17, 2008) (hereinafter ''FMVSS No. 122 NPRM'').

[4] *See* U.S. Department of Transportation, ''Action Plan to Reduce Motorcycle Fatalities,'' (October 2007), *available at http://www.nhtsa.gov/DOT/NHTSA/Communication%20&%20Consumer%20Information/Articles/Associated%20Files/4640-report2.pdf* (last accessed April 10, 2012) (hereinafter ''Action Plan to Reduce Motorcycle Fatalities''); National Highway Traffic Safety Administration (NHTSA) & Motorcycle Safety Foundation (MSF), ''National Agenda for Motorcycle Safety,'' *available at http://www.nhtsa.gov/people/injury/pedbimot/motorcycle/00-NHT-212-motorcycle/index.html* (last accessed April 10, 2012); *see generally http://www.nhtsa.gov/Safety/Motorcycles* (last accessed April 10,2012).

comprehensively, focusing on regulatory, as well as behavioral and roadway, countermeasures and strategies. In October 2007, the Department announced the ''Action Plan to Reduce Motorcycle Fatalities,'' which will help reduce motorcycle fatalities with new national safety and training standards, a curb on the use of counterfeit labeling on helmets, a new focus on motorcycle-specific road improvements, training for law enforcement officers on how to spot unsafe motorcyclists, and a broad public awareness campaign on rider safety.[5]

II. Background

FMVSS No. 122, *Motorcycle brake systems,* 49 CFR 571.122, took effect on January 1, 1974.[6] FMVSS No. 122 specifies performance requirements for motorcycle brake systems. The purpose of the standard is to provide safe motorcycle brake performance under normal and emergency conditions. The safety afforded by a motorcycle's braking system is determined by several factors, including stopping distance, linear stability while stopping, fade resistance, and fade recovery. A safe system should have features that both guard against malfunction and stop the motorcycle if a malfunction should occur in the normal service system. FMVSS No. 122 was originally conceived to cover each of these aspects of brake safety by specifying equipment and performance requirements appropriate for both two-wheeled and three-wheeled motorcycles. Because motorcycles differ significantly in configuration from other motor vehicles, the agency established a separate brake standard applicable only to this vehicle category. Many of the FMVSS No. 122 test procedures are, however, similar to those for passenger cars.[7]

Only a few changes have been made to the regulation since it was established. In response to petitions, a 1974 final rule changed the application of FMVSS No. 122 requirements for low-speed motor-driven cycles (motorcycles with 5-brake horsepower or less whose speed attainable in one mile is 30 miles per hour or less).[8] In 1978, NHTSA amended the FMVSS No. 122 parking brake test to clarify the test conditions and incorporate an interpretation applicable to three-wheeled motorcycles.[9] In 2001, the minimum hand lever force requirements for the heat fade test and water recovery test were decreased to facilitate the manufacture of motorcycles with combined braking systems.[10] Except for the above changes, FMVSS No. 122 has not been amended to keep pace with the advancement of modern brake technologies.

A. Current Requirements of FMVSS No. 122

FMVSS No. 122 applies to both two-wheeled and three-wheeled motorcycles. Among other requirements, the motorcycle manufacturer must ensure that each motorcycle can meet performance requirements under conditions specified in paragraph S6, *Test conditions,* and as specified in paragraph S7, *Test procedures.* The tests in S7 include pre- and post-burnishment effectiveness tests, a fade and recovery test, a partial failure test, a water recovery test, and parking brake test. At the end of the test procedure sequence, the brake system must pass a durability inspection. All stops must be made without lockup of any wheel.

Equipment. Each motorcycle is required to have either a split service brake system or two independently actuated brake systems. The former system encompasses a service brake system combined with a hand operated parking brake system for three-wheeled motorcycles. If a motorcycle has a hydraulic service brake system, it must also have a reservoir for each brake circuit, and a master cylinder reservoir label advising the proper grade of brake fluid. If the service brake system is a split hydraulic type, a failure indicator lamp is required. Additionally, three-wheeled motorcycles must be equipped with a friction type parking brake with a solely mechanical means to retain engagement. The service brake system must be installed so that the lining thickness of the drum brake shoes may be visually inspected, either directly or by using a mirror without removing the drums, and so that disc brake friction lining thickness may be visually inspected without removing the pads.

Pre- and post-burnish tests. The service brake system and each independently actuated service brake system on each motorcycle must be capable of stopping within specified distances from 30 miles per hour (mph) and 60 mph. The brakes are then burnished by making 200 stops from 30 mph at 12 feet per second per second (fps^2). The service brake system must then be capable of stopping at specified distances from 80 mph and from a speed divisible by 5 mph that is 4 mph to 8 mph less than the maximum motorcycle speed. The post-burnish tests are conducted in the same way as the pre-burnish stops, and the service brakes must be capable of stopping the motorcycle within the post-burnish specified stopping distances.

Fade and recovery test. The fade and recovery test compares the braking performance of the motorcycle before and after ten 60-mph stops at a deceleration of not less than 15 fps^2. As a check test, three baseline stops[11] are conducted from 30 mph at 10 to 11 fps^2, with the maximum brake lever and maximum pedal forces recorded during each stop, and averaged over the three baseline stops. Ten 60-mph stops are then conducted at a deceleration rate of not less than 15 fps^2, followed immediately by five fade recovery stops from 30 mph at a deceleration rate of 10 to 11 fps^2. The maximum brake pedal and lever forces measured during the fifth recovery stop must be within plus 20 pounds and minus 10 pounds of the baseline average maximum brake pedal and lever forces.

Partial failure test. In the event of a pressure component leakage failure, the remaining portion of the service brake system must continue to operate and shall be capable of stopping the motorcycle from 30 mph and 60 mph within specified stopping distances. The brake failure indicator light must activate when the master cylinder fluid level decreases below the minimum specified level.

Water recovery test. The water recovery test compares the braking performance of the motorcycle before and after the motorcycle brakes are immersed in water for two minutes. Three baseline stops are conducted from 30 mph at 10 to 11 fps^2, with the maximum brake lever and pedal forces recorded during each stop, and averaged over the three baseline stops. The motorcycle brakes are then immersed in water for two minutes, followed immediately by five water recovery stops from 30 mph at a deceleration rate of 10 to 11 fps^2. The maximum brake pedal and lever forces measured during the fifth recovery stop must be within

[5] *Id.* at 1.

[6] Response to Petitions for Reconsideration, Motorcycle Brake Systems, 37 FR 11973 (June 16, 1972).

[7] *See* Brake Systems on Motorcycles Proposed Motor Vehicle Safety Standard, 36 FR 5516 (Mar. 24, 1971).

[8] Final Rule, Motor-Driven Cycles, 39 FR 32914 (Sept. 12, 1974).

[9] Final Rule, Motorcycle Brake Systems, 43 FR 46547 (Oct. 10, 1978).

[10] Final Rule, Federal Motor Vehicle Safety Standards, Motorcycle Brake Systems, 66 FR 42613 (Aug. 14, 2001).

[11] The baseline check is used to establish a specific motorcycle's pre-test performance to provide a basis for comparison with post-test performance. This comparison is intended to ensure adequate brake performance, at reasonable lever and pedal forces, after numerous high speed or wet brake stops.

plus 20 pounds and minus 10 pounds of the baseline average maximum brake pedal force and the lever force.

Parking brake test. For motorcycles required to be equipped with a parking brake system, such system must be able to hold the motorcycle on a 30 percent grade, in both forward and reverse directions, for 5 minutes. A parking brake indicator lamp must be provided.

B. Harmonization Efforts

Globally, there are several existing regulations, directives, and standards that pertain to motorcycle brake systems. As all share similarities, the Contracting Parties to the 1998 Agreement under WP.29 tentatively determined that the development of a GTR under the 1998 Agreement would be beneficial.

In an effort to select the best of existing performance requirements for a GTR, the U.S. and Canada conducted analyses of the relative stringency of three national motorcycle brake system regulations. These were the UNECE Regulation No. 78, FMVSS No. 122, and the Japanese Safety Standard JSS 12–61. The subsequent reports, along with proposed provisions of a GTR, were presented at meetings of the Working Party for Brakes and Running Gear (GRRF),[12] and were made available in the NPRM docket.[13] While using different methodologies, the results from the U.S./Canada report were similar to an industry led report that examined the issue under the GRRF.[14] These studies completed by the U.S., Canada, and the industry provided the basis for the development of the technical requirements of the GTR.

The informal group used the feedback from the GRRF presentations to assist with the completion of the proposed GTR, a copy of which can be found in the NPRM docket.[15] Where national regulations or standards address the same subject, e.g. dry stop or heat fade performance requirements, the informal group reviewed comparative data on the relative stringency of the requirements from the research and studies and included the most stringent options. Additional testing was conducted to confirm or refine the testing and performance requirements. Qualitative issues, such as which wet brake test to include, were discussed on the basis of the original rationales and the appropriateness of the tests to modern conditions and technologies. In each of these steps, specific technical issues were raised, discussed, and resolved, as discussed in the NPRM and below. The informal working group held a total of eight meetings concerning the development of the GTR. In November 2006, WP.29 approved the GTR on Motorcycle Brake Systems, and established it in the Global Registry as Global Technical Regulation No. 3.

As explained in the NPRM, the GTR on motorcycle brake systems consists of a compilation of the most stringent and relevant test procedures and performance requirements from current standards and regulations. As a result of the comparison process, the selected performance requirements of the GTR are mainly drawn from the UNECE Regulation No. 78, the FMVSS No. 122 and the Japanese Safety Standard JSS 12–61 (JSS 12–61). The GTR is comprised of several fundamental tests, each with their respective test procedures and performance requirements. These tests and procedures are listed below along with the national regulation on which they are based:

- Burnish procedure (FMVSS No. 122)
- Dry stop test with each service brake control actuated separately (UNECE Regulation No. 78/JSS 12–61)
- Dry stop test with all service brake systems applied simultaneously (FMVSS No. 122)
- High speed test (JSS 12–61)
- Wet brake test (UNECE Regulation No. 78/JSS 12–61)
- Heat fade test (UNECE Regulation No. 78/JSS 12–61)
- Parking brake test (UNECE Regulation No. 78/JSS 12–61)
- ABS tests (UNECE Regulation No. 78/JSS 12–61)
- Partial failure test—split service brake systems (FMVSS No. 122)
- Power-assisted braking system failure test (new)

The GTR process was transparent to country delegates, industry representatives, public interest groups, and other interested parties. Information regarding the meetings and negotiations was publicly available through notices published periodically by the agency and UN Web site.[16] See the NPRM for additional discussion of the harmonization process.[17]

C. Comments Received in Response to the Notice of Proposed Rulemaking

The U.S., as a Contracting Party of the 1998 Agreement that voted in favor of establishing this GTR at the November 15, 2006 Session of the Executive Committee of the 1998 Agreement, is obligated under the 1998 Agreement to initiate the process for adopting the provisions of the GTR.[18] On September 17, 2008, NHTSA published a notice of proposed rulemaking (NPRM) to update FMVSS No. 122 that was based on the Motorcycle Brake Systems GTR, which satisfied the U.S. obligations under the 1998 Agreement noted above.

In response to the NPRM, NHTSA received comments from the following parties: The Motorcycle Industry Council (MIC),[19] American Honda Motor Company, Inc. (Honda),[20] Harley-Davidson Motor Company (Harley-Davidson),[21] Robert Bosch LLC (Bosch),[22] the Insurance Institute for Highway Safety (IIHS),[23] ASTM International (ASTM),[24] SMO Group, L.L.C. (SMO),[25] and the American Association for Justice (AAJ).[26]

[12] The GRRF is made up of delegates from many countries around the world, and who have voting privileges. Representatives from manufacturing and consumer groups also attend and participate in the GRRF and informal working groups that are developing GTRs. Those that chose not to participate are kept apprised of the GTR progress from progress reports which are presented at the GRRF meetings and then posted on the UN's Web site.

[13] *See* Docket Nos. NHTSA–2008–0150–0005.1, NHTSA–2008–0150–0006.1.

[14] *See* Docket No. NHTSA–2008–0150–0007.1.

[15] *See* Docket No. NHTSA–2008–0150–0002.1. The first formal proposal for a GTR concerning motorcycle brake systems was presented during the 58th GRRF session in September 2005. A more detailed report on the technical details, deliberations and conclusions, which led to the proposed GTR, was provided separately as informal document No. GRRF–58–16. *See* Docket No. NHTSA–2008–0150–0004.1.

[16] *See* Recommendations for Establishing Global Technical Regulations Under the United Nations/Economic Commission for Europe 1998 Global Agreement, Motor Vehicle Safety, 66 FR 4893, Docket No. NHTSA–00–7538 (Jan. 18, 2001); NHTSA's Activities Under the United Nations Economic Commission for Europe 1998 Global Agreement, 69 FR 60460, Docket No. NHTSA–03–14395 (Oct. 8, 2004); NHTSA's Activities Under the United Nations Economic Commission for Europe 1998 Global Agreement, 71 FR 59582, Docket No. NHTSA–2003–14395 (Oct. 10, 2006); *see also http://www.unece.org/trans/main/wp29/wp29wgs/wp29grrf/grrf-infmotobrake7.html* for a record of all GRRF meetings and documents presented therein (last accessed April 26, 2010).

[17] FMVSS No. 122 NPRM, 73 FR at 54022.

[18] While the 1998 Agreement obligates such Contracting Parties to initiate rulemaking within one year of the establishment of the GTR, it leaves the ultimate decision of whether to adopt the GTR into their domestic law to the parties themselves.

[19] Motorcycle Industry Council Inc. Comments, Docket No. NHTSA–2008–0150–0017.1 (hereinafter ''MIC Comments'').

[20] American Honda Motor Co., Inc. Comments, Docket No. NHTSA–2008–0150–0018.1 (hereinafter ''Honda Comments'').

[21] Harley-Davidson Motor Company, Docket No. NHTSA–2008–0150–0012 (hereinafter ''Harley-Davidson Comments'').

[22] Robert Bosch LLC Comments, Docket No. NHTSA–2008–0150–0016.1 (hereinafter ''Robert Bosch Comments'').

[23] Insurance Institute for Highway Safety Comments, Docket No. NHTSA–2008–0150–0015.1.

[24] ASTM International Comments, Docket No. NHTSA–2008–0150–0011.1.

[25] SMO Group, L.L.C. Comments, Docket No. NHTSA–2008–0150–0013.1.

[26] American Association for Justice Comments, Docket No. NHTSA–2008–0150–0014.1.

All comments received were timely, and they are each considered in this final rule and discussed below, with one exception. The AAJ commented on the language of the preamble concerning implied preemption, and its comment was neither related to the proposed regulatory text, nor to motorcycle braking nor to motorcycle safety.[27] Because that comment did not specifically relate to the proposal, and because NHTSA has already responded to a similar AAJ comment in the context of another **Federal Register** notice,[28] we do not address the AAJ comment any further here.

Comments were generally supportive of NHTSA's intent to harmonize FMVSS No. 122 with other nations' and regulatory bodies' standards through the adoption of the GTR. The substantive comments received were concerned mainly with test procedures rather than with brake system design requirements. Specifically, Harley-Davidson, Honda, and the Motorcycle Industry Council (MIC) all commented on each of the following three issues, which were the main issues in their submittals:

- The NHTSA proposal in the NPRM specified stopping distance as the sole compliance criterion for several performance tests in FMVSS No. 122 while leaving out the option to use Mean Fully Developed Deceleration (MFDD) where applicable. Commenters requested that NHTSA include MFDD as an alternative compliance option for measuring stopping performance.
- The NPRM specified that Peak Braking Coefficient (PBC) be measured by an ASTM skid-trailer method only. It did not include other methods that were stated in the GTR for measurement of test surface friction coefficient. Commenters requested that the agency allow manufacturers the option to choose which test method it uses to measure PBC.
- The NHTSA proposal changed ''nominal PBC'' as it appears in the GTR to just ''PBC,'' i.e., NHTSA removed the word ''nominal'' in specifying the friction coefficient of test track surfaces used for motorcycle brake testing. Commenters requested that NHTSA retain the GTR term ''nominal,'' based on best engineering practices.

III. General Improvements to FMVSS No. 122

Here, we discuss the proposed general amendments and improvements to FMVSS No. 122, any comments received on these proposed improvements, and the agency's response to those comments. Where no comments were received on a proposed amendment, or a certain aspect of an amendment, NHTSA has generally adopted those proposals in accordance with the rationale detailed in the NPRM. Although this final rule states as such for each amendment, we generally will not repeat the rationale and justification for aspects of the proposal that did not receive comment. We refer readers to the NPRM for the basis for those amendments.[29]

A. New Terminology

The NPRM proposed to revise or add definitions in FMVSS No. 122 (paragraph S4) where necessary to define terms used in the proposed regulatory text, and we are largely retaining the definitions as proposed in the NPRM. In order to streamline the proposed regulatory text to more closely reflect the GTR text, some of the new proposed terms were common terminology and definitions based on the UN document titled ''Special Resolution No. 1 Concerning the Common Definitions of Vehicle Categories, Masses and Dimensions (S.R.1)'' [30] (UN Doc. S.R.1) developed for the purposes of the GTRs. Thus, the NPRM proposed to add certain new definitions to § 571.122 S4, *Definitions,* that may be similar to existing 49 CFR Part 571 definitions. For example, current FMVSS No. 122 specifies that performance requirements must be met when the ''motorcycle weight is unloaded vehicle weight plus 200 pounds.'' [31] This is effectively equivalent to the mass term ''lightly loaded'' in the proposed rule, which is the testing condition specified for the proposed dry stop test (all service brake controls actuated), the high-speed test, the antilock brake systems tests, and the partial failure test.[32] These proposed terms, some of which may be similar or equivalent to existing terms defined elsewhere in 49 CFR Part 571, are used in the motorcycle brakes GTR in an effort to streamline the GTR and maximize harmonization benefits.

Additionally, the proposed rule divided motorcycles into five categories, which are referenced in the GTR. These motorcycle categories are based on number of wheels and maximum speed, and were originally defined in the UN Doc. S.R.1, as amended in May 2007.[33] We included these categories in the definitions portion of proposed FMVSS No. 122 because under the GTR some performance tests do not apply to certain motorcycle categories, and certain motorcycle categories have different performance requirements than others.

Category 3–1 and category 3–3 motorcycles are two-wheeled motorcycles. Category 3–1 motorcycles are two-wheeled motorcycles with an engine cylinder capacity not exceeding 50 cm^3 and a maximum design speed not exceeding 50 kilometers per hour (km/h). Category 3–3 motorcycles are two-wheeled motorcycles with an engine cylinder capacity exceeding 50 cm^3 or a maximum design speed exceeding 50 km/h. Category 3–2 motorcycles are three-wheeled motorcycles of any wheel arrangement with an engine cylinder capacity not exceeding 50 cm^3 and a maximum design speed not exceeding 50 km/h. Category 3–4 motorcycles are those manufactured with three wheels asymmetrically arranged in relation to the longitudinal median plane with an engine cylinder capacity exceeding 50 cm^3 or a maximum design speed exceeding 50 km/h. Finally, category 3–5 motorcycles are motorcycles manufactured with three wheels symmetrically arranged in relation to the longitudinal median plane with an engine cylinder capacity exceeding 50 cm^3 or a maximum design speed exceeding 50 km/h.

Motorcycle categories. Based on comments from both Harley-Davidson

[27] The AAJ has submitted to several other rulemaking dockets similar comments regarding the agency's preamble discussions of preemption.

[28] See Federal Motor Vehicle Safety Standards; Electric-Powered Vehicles; Electrolyte Spillage and Electrical Shock Protection, 75 FR 33515, 33524–25 (Jun. 12, 2010).

[29] *See* FMVSS No. 122 NPRM, 73 FR at 54023–54027.

[30] World Forum for Harmonization of Vehicle Regulations (WP.29), *Special Resolution No. 1 Concerning the Common Definitions of Vehicle Categories, Masses and Dimensions (S.R.1),* U.N. Doc. TRANS/WP.29/1045 (Sept. 15, 2005), *available at http://www.unece.org/trans/doc/2005/wp29/TRANS-WP29-1045e.pdf* (last accessed April 26, 2010).

[31] 49 CFR 571.122, S6.1. ''Unloaded vehicle weight'' is defined under 49 CFR 571.3(b) to mean ''the weight of a vehicle with maximum capacity of all fluids necessary for operation of the vehicle, but without cargo, occupants, or accessories that are ordinarily removed from the vehicle when they are not in use.''

[32] Lightly loaded means the sum of unladen vehicle mass (mass of the vehicle with bodywork and all factory fitted equipment, and fuel tanks filled to at least 90 percent) and driver mass ''plus 15 kg for test equipment, or the laden condition, whichever is less.'' FMVSS No. 122 S4, *Definitions* (proposed).

[33] *See* WP.29, *Amendment to Special Resolution No. 1 Concerning the Common Definitions of Vehicle Categories, Masses, and Dimensions,* U.N. Doc. ECE/TRANS/WP.29/1045/Amend.1 (May 9, 2007), *available at http://www.unece.org/trans/main/wp29/wp29wgs/wp29gen/wp29fdoc/1000/ECE-TRANS-WP29-1045a1e.pdf* (last accessed April 26, 2010).

and the MIC regarding inconsistencies between category 3–4 and category 3–5 requirements, NHTSA has identified a series of mistakes in the proposed regulatory text relating to the identification of these two categories. For example, Harley-Davidson and the MIC commented that the stopping distances for category 3–4 and 3–5 motorcycles listed in Table 2 (Performance requirements, Dry stop test—single brake control actuated) appear to have been incorrectly reversed in the first two sections of the table: Single Brake System—Front Wheel(s) Braking Only, and Single Brake System—Rear Wheel(s) Braking Only.[34] Proposed regulatory text Table 2 listed these tests as inapplicable to category 3–4 motorcycles and listed a stopping distance for category 3–5 motorcycles. These commenters noted that under the proposed regulatory text, stopping distances would be inapplicable for category 3–5 vehicles in these two sections because those vehicles are required to have a combined or split service brake. However, as noted by the commenters, motorcycle-sidecar combinations of category 3–4 would still be permitted to be equipped with separate brakes.

These commenters further stated that it similarly thought the reference to category 3–5 in Table 4 (Performance requirements, Power-assisted braking system failure test) should be category 3–4 because category 3–5 vehicles will carry split service systems or combined break systems (CBS) and are covered in the subsequent section of Table 4.[35]

Agency Response: The regulatory text of the NPRM was based on a version of the GTR in which the definitions for category 3–4 motorcycles and category 3–5 motorcycles were listed incorrectly. Specifically, the category 3–4 and 3–5 notations were actually interchanged with each other. This error was addressed in the GTR by a correction document which stated that the text ''3–4'' as it appears throughout the GTR shall be replaced with ''3–5,'' and the text ''3–5'' shall be replaced with the text ''3–4.'' [36] This correction results in the GTR associating category 3–4 requirements with sidecar-equipped motorcycles and category 3–5 requirements with symmetric three-wheeled motorcycles, or ''trikes,'' as intended.

Because the regulatory text of the NPRM corresponded closely with that of the GTR, this mix-up was carried forward in the NPRM. Thus, there are a variety of inconsistencies in the requirements for category 3–4 and category 3–5 motorcycles throughout the NPRM regulatory text. This includes Table 2 as noted by the commenters. Although the definitions of ''Category 3–4 motorcycle'' and ''Category 3–5 motorcycle'' given in paragraph S4 of the proposed regulatory text are correct, most of the subsequent occurrences throughout the regulatory text are incorrect. This mistake is easily remedied by replacing ''3–4'' with ''3–5,'' and vice versa, in each place where requirements apply to one or the other category. We have corrected the final rule regulatory text by applying these corrections in each appropriate instance. Concerning Table 2, to maintain the desired ordering of categories, we have moved each stopping distance specification listed for category 3–5 to the corresponding category 3–4 row, and listed ''not applicable'' in each category 3–5 row. Finally, we have made a related clarification in subsection S6.5.2.2(d)(3) of the regulatory text, to add a specification of category 3–5.

''Lightly loaded'' definition. The MIC commented that in the parenthetical included in this definition, it was unclear as to which paragraphs the text was intending to refer.[37] The proposed definition of ''lightly loaded'' referred to ''paragraphs 4.9.4 to 4.9.7'' in a parenthetical, and no such paragraphs existed in the proposed regulatory text.

Agency Response: The proposed range quoted above was referring to the requirements as they were listed in the GTR. The proposed rule should have listed the paragraphs as they were associated with the proposed regulatory text. The GTR paragraphs referenced are a series of the ABS test procedures. The corresponding paragraphs in NHTSA's proposed regulatory text were S6.9.4 through S6.9.7. We have made this change in the final regulatory text.

''Unladen vehicle mass'' definition. The MIC suggested that the proposed definition of ''lightly loaded'' should use the term ''motorcycle,'' as opposed to the term ''vehicle'' in the definition.[38] They suggest that perhaps ''motorcycle'' should be used in place of the term ''vehicle'' elsewhere in the proposed standard as well.

Agency Response: Although the term ''motorcycle'' is used throughout the current FMVSS No. 122, we are not making this change as the commenter suggested. The term ''vehicle'' is the one used in the GTR's regulatory definitions as well as in the UN Doc. S.R.1, which is the source document for the vehicle categorization used in the GTR. For these reasons, and in order to streamline the GTR and to maximize the benefits of harmonization, we are in favor of keeping the term ''vehicle'' as used throughout the proposed regulatory text.

CBS. Bosch commented that electro-mechanical CBS (eCBS) should be distinguished from conventional CBS because the failure mode for eCBS is different from CBS.[39] Bosch suggested that the paragraph S4 definitions should exclude eCBS and that this could be accomplished by rewording the definition for each motorcycle category to say that CBS is ''A service brake system * * * *mechanically linked and* actuated by a single control.''

Bosch differentiates eCBS from conventional CBS because eCBS systems have no mechanical or hydraulic link between the front and rear brake circuits. With eCBS, the activation of a front or rear service brake by a rear or front brake control, respectively, is accomplished by purely electronic means. Bosch stated that the distinction between eCBS and conventional CBS is important because the failure mode for eCBS is different than for CBS, i.e., failed eCBS performs just like conventional, separate front and rear brakes. Bosch explained that ''[a]n eCBS is subject to system failure, deactivation, and degradation, which results in a system that is functionally equivalent to a non-CBS with the corresponding performance limits.'' [40]

Bosch commented that their proposed re-definition to make eCBS subject only to the performance requirements for single brake systems (outlined above) is appropriate because of unique characteristics of eCBS that are not accounted for in the proposed rule. Bosch pointed out that an eCBS, unlike a CBS, may be equipped with a deactivation switch, a low-speed mode, speed-dependent brake force distribution, or a variety of rider-selectable modes that tune the system for riding conditions. Bosch stated that, ''[t]hese additional eCBS characteristics differentiate an eCBS from a CBS and prescribe that the performance

[34] Harley-Davidson Comments, Docket No. NHTSA–2008–0150–0012 at 4; MIC Comments, Docket No. NHTSA–2008–0150–0017.1 at 3.

[35] *Id.*

[36] *See Global Technical Regulation No. 3, Corrigendum 1, Motorcycle Brake Systems,* U.N. Doc. ECE/TRANS/180/Add.3/Corr.2 (Jan. 29, 2008), *available at http://www.unece.org/trans/main/wp29/wp29wgs/wp29gen/wp29registry/gtr3.html* (last accessed April 26, 2010).

[37] MIC Comments, Docket No. NHTSA–2008–0150–0017.1 at 3.

[38] *Id.*

[39] Bosch Comments, Docket No. NHTSA–2008–0150–0016.1.

[40] *Id.* at 2.

requirements for a CBS are not always applicable for an eCBS.'' [41]

Bosch suggested that, as an alternative to excluding eCBS from the regulatory definitions, NHTSA could instead define eCBS separately from CBS and provide separate performance requirements to account for the different eCBS failure modes, similar to the way that ABS electrical failure is treated in S6.9.8 of the proposed FMVSS No. 122 regulatory text.[42] According to Bosch, this would have to include an exception to the performance requirements defined in Table 2.

Agency Response: Bosch's comment suggests that NHTSA should include specific test procedures to address the possibility of a failed eCBS system. As Bosch acknowledges, this would entail defining eCBS separately from CBS, and/or adding separate test procedures for eCBS. If separate test procedures were added, eCBS would be treated similarly to ABS, for which the NPRM has special procedures, including the electrical failure test of S6.9.8.

Bosch seems to suggest that system failure is more likely in the case of an eCBS than a conventional, mechanical CBS, which would seem logical because of the purely electronic link between front and rear brake circuits. Certainly, eCBS could be designed so as to be readily deactivated, such as by equipping the motorcycle with an on/off switch for that purpose. In contrast, deactivation would not necessarily be easily accomplished with conventional CBS, but much would depend on the details of the CBS system design.

Since eCBS systems currently are not in use, it is difficult for us to evaluate whether adding specific test procedures to address eCBS system failure is appropriate. Furthermore, in the FMVSS No. 122 proposal, there were no CBS-specific requirements that an eCBS would or should be incapable of meeting, nor is eCBS addressed in the GTR separately from CBS. Since the GTR does not include any proposal for failed CBS performance and since no eCBS system is currently available commercially, the agency believes that establishing failed systems performance requirements for eCBS would be premature. Therefore, we are electing not to make any changes related to eCBS at this time, but we will evaluate in the future whether such accommodations are necessary.

[41] *Id.*

[42] *Id.* at 3.

B. Measurement of Performance Using Stopping Distance

The GTR specifies stopping performance requirements in terms of both stopping distance and MFDD. The NPRM proposed stopping distance as the sole compliance criterion for several performance tests in proposed FMVSS No. 122 because, as noted in the proposal, stopping distance is a longstanding compliance criterion in FMVSS No. 122 as well as in NHTSA's standards for brake performance of both light vehicles and heavy vehicles.[43] We further stated that the Executive Committee of the 1998 Agreement and WP.29 are aware that the U.S. intended to make these choices as allowed in the GTR.

Harley-Davidson, Honda, and the MIC each suggested that the agency should include the alternative criterion of MFDD, which is a calculated value based on both speed and stopping distance measurements.[44] MFDD and stopping distance are both included in the GTR as alternative performance measures in several of the performance tests.

Harley-Davidson commented that, based on its significant experience with MFDD, a vehicle that passes the stopping distance measure will also pass MFDD. Harley-Davidson also commented that the GTR and the UNECE Regulation No. 78 allow either measure to be used. Further, Harley-Davidson stated that some of the international inspection agencies prefer MFDD, and that MFDD removes human factors from brake performance testing. Harley-Davidson pointed out that an MFDD-like procedure is already incorporated into the proposed regulatory text, specifically in proposed section S6.7.3.2(d)(1) pertaining to heat fade tests.[45] Harley-Davidson stated that as a result of inclusion of MFDD into the heat fade test requirements, manufacturers and test facilities will be required to apply MFDD for some measures. Finally, Harley-Davidson noted that the commentary accompanying the GTR recommends using the MFDD measure ''to maintain consistency in the results.''

Honda likewise requested that MFDD be included in NHTSA's final rule. Honda commented that the GTR did not give individual regulating bodies the discretion to exclude MFDD. Honda stated that the ''GTR does not specify the option for each region to select only one method of measurement.'' Further, Honda noted that ''the MFDD method has been utilized by Honda as the primary method for determining stopping performance and has found it to be more reliable and repeatable than the distance method.''

Similarly, the MIC pointed out that the GTR includes both MFDD and stopping distance as alternative performance criteria, which allows the manufacturer to choose to measure brake performance by either deceleration or stopping distance. It also noted that deceleration-based performance tests are already part of NHTSA's proposal, in proposed paragraphs S6.6.3 *et seq.,* and in paragraph S5.3.2, which refers to ''continuous deceleration recording.'' The MIC took issue with the rationale NHTSA gave for excluding MFDD:

> The reason given [in the NPRM] for mandating brake performance measurement exclusively by stopping distance is ''to enhance the enforceability of the Standard as opposed to providing optional performance measures,'' and that ''this is consistent with how performance requirements are stated in other Federal Motor Vehicle Safety Standards.'' We don't agree that either is sufficient to justify departure from the GTR and not in the best interest of harmonization.

The MIC, Harley-Davidson, and Honda each requested that NHTSA incorporate the MFDD as an alternative performance measure in all appropriate tests in the final rule.

Agency Response: We are declining to adopt these commenters' suggestions to allow manufacturers a choice of performance measures in certain performance tests. As explained below, providing manufacturers with an option for compliance in FMVSS test procedures is not common because it presents a substantial enforcement difficulty for the agency. Moreover, NHTSA participated in the development of the GTR and during that process reached agreement with the other parties that we would continue to use stopping distance in all appropriate FMVSS No. 122 test procedures. The inclusion of a stopping distance measurement procedure was an important factor in U.S. approval of the GTR.

When NHTSA stated in the NPRM that specifying stopping distance enhances enforceability and referenced other FMVSSs to explain how performance criteria are specified elsewhere by the agency, we meant that for various reasons (detailed below)

[43] FMVSS No. 122 NPRM, 73 FR at 54034.

[44] *See* Honda Comments, Docket No. NHTSA–2008–0018.1 at 2; MIC Comments, Docket No. NHTSA–2008–0150–0017.1 at 2; Harley-Davidson Comments, Docket No. NHTSA–2008–0150–0012 at 2.

[45] Although Harley-Davidson's comments referred to this provision as part of the ''wet fade tests,'' we will refer to the referenced proposed tests as the ''heat fade tests,'' consistent with the NPRM.

NHTSA believes stopping distance is a better performance criteria than a measurement of deceleration, and we do not ordinarily provide manufacturer options for compliance because it can create an enforcement problem for the agency. For example, if we allow two different measures of braking performance in FMVSS No. 122 and, when testing for compliance, NHTSA measures stopping distance and finds a failure to meet the minimum stopping distance requirement test, NHTSA would then be required to conduct additional testing to calculate MFDD.

Additionally, we believe that stopping distance is a preferable measurement of performance because MFDD assumes a certain level of brake system responsiveness and does not consider performance over the entire braking event. We believe the stopping distance measure is less design-restrictive because it allows a manufacturer to develop brake performance for the entire range of a braking event. Similarly, since it accounts for the distance traveled between the time a brake lever or pedal is applied and the time the motorcycle actually begins to decelerate, stopping distance addresses the potential problem of slow-acting brake systems.

Further, none of the commenters presented any new information on this issue. Nor did any commenter present data to support assertions about accuracy of MFDD, for example, that MFDD is ''more reliable and repeatable than the distance method.'' [46] Since stopping distance is used as one of the measured values in the equation for calculating MFDD, the accuracy of MFDD depends to a great extent on stopping distance accuracy. MFDD is not a measured value but is calculated using measurements of speed and stopping distance. Because it is a factor in the MFDD calculation, stopping distance still would have to be measured even if MFDD was the specified compliance criterion in the NHTSA standard. Consequently, there is little additional test burden in having to collect stopping distance data.

In response to the commenter that stated that the commentary accompanying the GTR recommends using the MFDD measure ''to maintain consistency in the results,'' we point out that this GTR preamble language was referring to the difference between the UNECE Regulation No. 78 specification of MFDD, and the JSS 12–61 specification of vehicle mean saturated deceleration (MSD). In the relevant portion of the GTR preamble, the text was discussing the difference between MFDD and MSD, and then stated that ''[i]n order to maintain consistency in the results, the MFDD was adopted [instead of MSD] to measure braking deceleration performance.'' [47] Thus, NHTSA does not believe this phrase should be taken out of context and used to characterize the GTR preamble discussion of MFDD versus stopping distance. In the GTR, the performance requirements for the different tests were as specified in the respective national regulation on which the test was based. However, based on U.S. insistence, where the basis of a test was performance measured by MFDD, the GTR also specified a stopping distance equivalent performance measure, since the U.S. would not support a GTR that specified only measurement of performance using MFDD. All GTR performance requirements refer to both measurements of stopping distance and MFDD in the table in paragraph 4.3.3 of the GTR.[48]

In response to Harley-Davidson's observation that the heat fade test measures performance by referring to MFDD, we do not agree. The commenter referenced proposed paragraph S6.7.3.2(d)(1), which describes the force that is to be applied to the brake lever when actuated during the heating stops: ''For the first stop: The constant control force that achieves a vehicle deceleration rate of 3.0–3.5 m/s^2 while the vehicle is decelerating between 80 percent and 10 percent of the specified speed.'' Since this specification is a way to determine force, stopping distance is not appropriate here. Further, the specified braking force to heat the brakes is not a performance requirement. In that paragraph, the test rider is just heating the brake. Paragraph S6.7.4, *Hot brake stop—test conditions and procedure,* then specifies how to test the hot brakes and paragraph S6.7.5, *Performance requirements,* specifies the comparative performance requirements between the baseline stop measurements and the hot brake stop measurements, in terms of stopping distance. Therefore, the use of a deceleration specification to describe the actuation force that a test rider is to use in the heat fade test is not inconsistent with the use of stopping distance for all performance measurements.

The MIC similarly commented that proposed paragraph S5.3.2 describes ''continuous deceleration recording,'' and stated that proposed paragraphs S6.6.3 *et seq.* reference deceleration measurements for wet and heat fade conditions even though it is not called MFDD. As explained above, the heat fade test does not describe performance requirements in terms of deceleration, but merely uses deceleration to specify how to determine how much force to apply to a brake when a test rider is actuating the brake for the purpose of heating it. The deceleration measurement specified in section S6.6.3 (wet brake test) is for average deceleration over the whole duration of the stop in accordance with paragraph S5.3.2. This is not the same as MFDD as the MIC suggested. MFDD is the vehicle deceleration calculated between 80 and 10 percent of the vehicle initial speed, not the deceleration from initial speed to full stop.

NHTSA notes that the 100 km/h dry stop test that was developed from the current FMVSS No. 122 specifies performance in terms of stopping distance only. It does not specify a deceleration-based criterion like MFDD. Similarly, the ABS stopping distance performance tests on low and high friction surfaces specify performance measures in terms of stopping distance only. Hence, in these tests, there is no alternative to measuring and recording stopping distance.

Finally, we note that the use of stopping distance in the FMVSS does not preclude the use of MFDD by manufacturers or other parties. As long as there is a basis for correlating with the FMVSS method, the test procedure used to certify a motorcycle brake system is left to the manufacturer's discretion. Specifically, FMVSSs do not require manufacturers to test every motor vehicle or piece of motor vehicle equipment (e.g., tires) to the specifications in each safety standard. The FMVSSs set performance standards that motor vehicles and motor vehicle equipment must meet when tested by the agency in accordance with the test procedures specified in the FMVSS associated with that performance requirement. Under the Motor Vehicle Safety Act, ''a manufacturer or distributor of a motor vehicle or motor vehicle equipment [must] certify * * * that the vehicle or equipment complies with applicable [FMVSSs].'' [49] Under this enforcement mechanism, known as ''self certification,'' the burden for ensuring that all new vehicles and equipment comply with Federal regulations is borne by the manufacturer. NHTSA does not perform any pre-sale testing, approval, or

[46] Honda Comments, Docket No. NHTSA–2008–0018.1 at 2.

[47] *See* Docket No. NHTSA–2008–0150–0002.1 at 11–12.

[48] *Id.* at 40.

[49] 49 U.S.C. 30115(a).

certification of vehicles or equipment, whether of foreign or domestic manufacture, before introduction into the U.S. retail market. To ensure compliance with agency regulations, NHTSA randomly tests certified vehicles or equipment (in accordance with the test procedures laid out in the regulations) to determine whether the vehicles or equipment fail to comply with applicable standards. For such enforcement checks, NHTSA purchases vehicles and equipment, which are then tested according to the procedures specified in the standards. If the vehicle or equipment passes the test, no further action is taken. If the vehicle or equipment fails, NHTSA has the authority to request additional information from the manufacturer on the basis for certification and to assess civil penalties for any confirmed violation.[50]

Neither the National Traffic and Motor Vehicle Safety Act[51] (nor other statutes NHTSA administers) nor NHTSA standards and regulations require that a manufacturer base its certifications on any particular tests, any number of specified tests or, for that matter, any tests at all. A manufacturer is required to exercise due care in certifying its motor vehicles. It is the responsibility of the manufacturer to determine initially what test results, computer simulations, engineering analyses, or other information it needs to enable it to certify that its vehicles comply with applicable Federal safety standards. Thus, manufacturers and test laboratories can measure performance using stopping distance, or another method, for their own certification purposes as long as they can reasonably correlate test results using their chosen method with those using the FMVSS procedure and show that their certification tests provide a sound basis for compliance with the safety standard.

C. Motorcycle Test Speed and Corrected Stopping Distance

The GTR set deceleration or stopping distance performance requirements for a specified initial test speed. While professional test riders can approach this initial test speed, it is unlikely that the test will be started at the exact speed specified, affecting the stopping distance measurement. The current FMVSS No. 122 does not specify a speed tolerance for this potential variation, but consistent with the GTR, the proposed rule specified Japan's existing general tolerance of ± 5 km/h in S6.1.4.

As explained in the NPRM, a method for correcting the measured stopping distance (in the event of the actual test speed deviating from the specified test speed, but within the ± 5 km/h tolerance) was proposed to compensate for the difference between the specified test speed and the actual speed where the brakes were applied (*see* S5.3.1(b)).[52] The MIC commented that the paragraph S6.1.4 reference to the proposed corrected stopping distance method in the proposed regulatory text appeared to be incorrect.[53]

Agency Response: We agree with the MIC. Paragraph S6.1.4 of the proposed regulatory text referred to the stopping distance correction formula as being in paragraph S5.3.2(b). The actual stopping distance correction formula was listed in paragraph S5.3.1(b), as noted by the MIC. NHTSA has corrected this inaccurate reference in the final regulatory text.

D. Peak Braking Coefficient

The peak braking coefficient (PBC) is a measure of the coefficient of friction of the test surface and is an important parameter in evaluating the brake performance of a vehicle. PBC is effectively equivalent to the peak friction coefficient (PFC) as defined in FMVSS No. 121, *Air brake systems,* and FMVSS No. 135, *Light vehicle brake systems.* The GTR specifies test surface conditions, one of which is that the high-friction ''test surface has a nominal [PBC] of 0.9, unless otherwise specified.'' As explained in the NPRM, for reasons of objectivity, we specified in the proposed rule a PBC equal to 0.9 for the high-friction dry test surface used for the motorcycle brake system tests.

FMVSS No. 122 currently specifies that the road tests be conducted on an 8-foot-wide level roadway having a skid number of 81. The skid number is also a measure of the coefficient of friction of the test surface and is derived by measuring the friction using a locked wheel, whereas the PBC is derived by measuring the peak surface friction before wheel lockup occurs. PBC is a more relevant surface friction measurement for non-locked wheel tests, such as those included in FMVSS No. 122 and in the GTR. Other Federal motor vehicle safety standards for braking systems, FMVSS No. 121 and FMVSS No. 135, specify the road test surface using a PBC of 0.9 when measured using the American Society for Testing and Materials (ASTM) E1136–93 (Reapproved 2003) standard reference test tire, in accordance with ASTM Method E1337–90 (Reapproved 2002), at a speed of 40 mph without water delivery.

As explained in the NPRM, the GTR defines the test surface using a PBC value instead of a skid number value since peak braking coefficient is a more representative measure of the type of braking tests performed in the requirements with a rolling tire. However, the decision was made to not specify the method used to measure the coefficient of friction but leave it to the national regulations to specify which of the above test methods should be used to measure PBC. In the U.S., the ASTM Method for measuring PBC to define surface friction has been included in Federal motor vehicle safety standards since the early-1990's and was also used by the U.S. automotive industry prior to that date. Accordingly, the agency proposed that the PBC of the test surface will be measured using the ASTM E1136–93 (Reapproved 2003) standard reference test tire, in accordance with ASTM Method E1337–90 (Reapproved 2002). The GTR maintains an option for Contracting Parties to specify in their respective national regulations the value of PBC for the high-friction dry test surface used for the motorcycle brake system tests.

PBC Measurement Methodology. Three commenters requested that NHTSA allow use of the test vehicle itself to define PBC as described in the GTR. Harley-Davidson requested that the agency reconsider our intent ''to allow only ASTM [E1337–90] to determine road surface peak braking coefficient.''[54] Harley-Davidson stated that, although NHTSA has a history of using the ASTM method, the use of the test vehicle itself to determine wheel lock threshold, as allowed by UNECE Reg. No. 78, is a widely used procedure that is well understood within the motorcycle industry. Harley-Davidson commented that the ASTM method involves the use of additional test equipment, and adds further complexity and costs to the testing process, while NHTSA has acknowledged that the two methods yield comparable results.

The MIC commented that the intention of the GTR was for both the ASTM method and the alternative UNECE Reg. No. 78 method to be

[50] *See, e.g.,* 49 U.S.C. 30165, 30166 (safety standards); 49 U.S.C. 32308, 32309 (consumer information); 49 U.S.C. 32507 (bumper standards); 49 U.S.C. 32706, 32709 (odometer fraud).

[51] National Traffic and Motor Vehicle Safety Act of 1966, Public Law 89–563, 80 Stat. 718 (1966) (now codified, as amended, at 49 U.S.C. 30101 *et seq.*).

[52] FMVSS No. 122 NPRM, 73 FR at 54024.

[53] MIC Comments, Docket No. NHTSA–2008–0150–0017.1 at 3.

[54] Harley-Davidson Comments, Docket No. NHTSA–2008–0150–0012 at 2.

available as test options.[55] The MIC stated that the choice of method should be up to the manufacturer or other testing entity. The MIC also pointed out that in some circumstances, where length and width of the test course are limited, the ASTM E1337–90 method cannot be performed.

Honda expressed a more specific difficulty regarding the PBC measurement. Honda stated that it has utilized a test facility that cannot accommodate the ASTM E1337–90 procedure due to its relatively small size.[56] Honda stated that it would have to move its manpower, vehicles, and testing equipment from its current on-site location to a much more distant one in order to accommodate the ASTM E1337–90 test procedure, and that having to do so would be very burdensome and expensive and could force product development delays. Additionally, Honda stated that moving testing to other Honda facilities would also cause schedule conflicts with testing of other on-road products, and may ultimately force Honda to build additional testing facilities at great expense.

Agency Response: The GTR leaves to individual national legislation the methodology that is selected for measurement of test surface friction. The text of the GTR makes this clear in paragraph 4.1.1.3, *Measurement of PBC,* which states that ''PBC is measured as *specified in national or regional legislation* using either: (a) [the ASTM E1337–90 test method]; or (b) [the UNECE Reg. No. 78 method].'' [57] Similarly, the formal statement of technical rationale and justification that precedes the GTR regulatory text states that the ''Contracting Parties [] agreed to list both methods in the regulatory text of the GTR, but decided to leave it to the national regulations to specify which of the above test methods should be used to measure the PBC.'' [58] The use of the phrase ''which of the above test methods'' in this preamble statement makes clear that the Contracting Parties intended that national regulations adopting the GTR could adopt either of the listed test methods.

Thus, consistent with the GTR, this final rule specifies that measurement of the PBC is conducted in accordance with the ASTM E1337–90 test method, or the first option in paragraph 4.1.1.3 of the GTR, as proposed.[59] NHTSA's selection of the ASTM method represents what we consider to be a well-defined baseline that is appropriate for use in a safety standard. As explained above, other FMVSSs specify the ASTM E1337–90 test method to measure peak braking coefficient. Thus, NHTSA is immediately prepared to start testing in accordance with this test method, as opposed to the UNECE Reg. No. 78 test method. While there may, as a couple commenters noted, be no quantifiable safety benefit to choosing one test method over the other, there is certainly an enforcement concern for the agency, both because NHTSA does not have as much experience conducting PBC measurements for compliance tests using the UNECE Reg. No. 78 test method, and because proving noncompliance is substantially more complicated when the agency provides manufacturers with multiple options for compliance, as explained in section III.B above.

As discussed above in section III.B, Federal motor vehicle safety standards (FMVSSs) do not require manufacturers to test every motor vehicle or piece of motor vehicle equipment to the specifications in each safety standard. The FMVSSs set performance standards that motor vehicles and motor vehicle equipment must meet when tested by the agency in accordance with the test procedures specified in the FMVSS associated with that performance requirement. Neither the National Traffic and Motor Vehicle Safety Act [60] (nor other statutes NHTSA administers) nor NHTSA standards and regulations require that a manufacturer base its certifications on any particular tests, any number of specified tests or, for that matter, any tests at all. A manufacturer is required to exercise due care in certifying its motor vehicles. It is the responsibility of the manufacturer to determine initially what test results, computer simulations, engineering analyses, or other information it needs to enable it to certify that its vehicles comply with applicable Federal safety standards. Thus, manufacturers and test laboratories can use the UNECE Reg. No. 78 method, or another method, for their own certification purposes as long as they can reasonably correlate test results using their chosen method with those using the FMVSS procedure and show that their certification tests provide a sound basis for compliance with the safety standard. The GTR preamble explains that despite the differences in methodology, ''the ABS validation research program demonstrated that, when properly conducted, both methods yield comparable results for evaluating the test surface.'' [61] Thus, it would appear that this approach will not impose a great financial burden on manufacturers. This approach has a longstanding history in brake system compliance tests.

As a practical matter, we note that in the UNECE Reg. No. 78 method, the surface friction coefficient is determined by measuring the maximum braking rate with ABS disabled, for the front wheel and rear wheel brakes applied simultaneously, and with constant brake forces applied throughout the tests. This is not practicable for some ABS-equipped motorcycles where ABS cannot be disabled. This is a particular concern since FMVSS No. 122, under the current amendment, for the first time will include procedures specifically for ABS. For these reasons, this final rule amends FMVSS No. 122 so that it will specify that when NHTSA tests for the performance criteria listed in the standard, PBC will be measured using the ASTM procedure.

Nominal PBC versus PBC. Harley-Davidson urged NHTSA to reconsider the language the agency chose for specifying the PBC measure of the high-friction test surface, stating that the proposed language appears to require an exact PBC measure of 0.9, rather than accepting a ''nominal PBC'' of 0.9.[62] Harley-Davidson commented that it did not understand NHTSA's intent in removing the term ''nominal'' and NHTSA's reference to ''objectivity,'' other than as a desire for the agency to maintain consistency with other NHTSA safety standards. Harley-Davidson went on to state:

[55] MIC Comments, Docket No. NHTSA–2008–0150–0017.1 at 1.

[56] Honda Comment, Docket No. NHTSA–2008–0150–0018.1 at 2. Honda gave no further details, but we assume the inability of its test facility to accommodate the ASTM E1337–90 method has to do with the additional track length needed to get a skid trailer up to the test speed of 64 km/h and maintain that speed while braking the trailer's test wheel, compared to the relatively shorter distance required to do the same from 60 km/h with a test motorcycle while braking it to a stop.

[57] *See Global Technical Regulation No. 3, Amendment 1, Motorcycle Brake Systems,* U.N. Doc. ECE/TRANS/180/Add.3/Amend.1 (July 31, 2008); *Global Technical Regulation No. 3, Motorcycle Brake Systems,* U.N. Doc. ECE/TRANS/180/Add.3 (Dec. 21, 2006), *available at http://www.unece.org/trans/main/wp29/wp29wgs/wp29gen/wp29registry/gtr3.html* (last accessed April 27, 2010).

[58] *Global Technical Regulation No. 3, Motorcycle Brake Systems,* U.N. Doc. ECE/TRANS/180/Add.3 at 11 (Dec. 21, 2006).

[59] *See* proposed paragraph S6.1.1.3. FMVSS No. 122 NPRM, 73 FR at 54039.

[60] National Traffic and Motor Vehicle Safety Act of 1966, Public Law 89–563, 80 Stat. 718 (1966) (now codified, as amended, at 49 U.S.C. 30101 *et seq.*).

[61] *Global Technical Regulation No. 3, Motorcycle Brake Systems,* U.N. Doc. ECE/TRANS/180/Add.3 at 11 (Dec. 21, 2006).

[62] Harley-Davidson Comments, Docket No. NHTSA–2008–0150–0012 at 2–3.

Measures of PBC are meant to be a statement of a current condition on a particular section of road. They are reported as an average of measures and, in the case of ASTM E1337–90, as an average of averages. Such a report is in the nature of ''nominal'' as we understand the term. We are uncertain whether NHTSA is effectively proposing to require vehicle manufacturers to expend extra resources to develop the entire test surface to attain an actual PBC of 0.9 rather than accepting a report of the nominal condition of the same test surface.

Harley-Davidson also quoted a discussion that was included in the technical rationale accompanying the GTR, at section 5.2.7.1, which lays out in detail the reasons why the GTR specifies a nominal PBC of 0.9 rather than an exact value.

Honda also commented on this issue. Honda stated that ''[i]t is difficult to maintain the PBC equal to exactly 0.9, and the parties which contributed to the GTR discussed this issue many times, agreeing to allow for slight variances.'' [63] Honda stated that referring to an exact PBC value would result in an unnecessary testing burden for which there will be no safety benefit. Honda suggested that, should NHTSA deem it necessary to specify a tolerance to improve objectivity, such a tolerance should be included in the FMVSS No. 122 Test Procedure.[64]

The MIC comment raised similar concerns, saying that testing costs will go up rather than be decreased, as described as a goal of the proposal, if the required PBC is set at exactly 0.9.[65] The MIC stated:

We agree that objectivity is desirable if the inclusion of an absolute is useful. However, in this application we do not believe it is either useful or desirable. It's difficult to set the PBC equal to 0.9 and this is recognized in the GTR that describes the attributes of the high-friction brake surface as having ''a nominal peak braking coefficient (PBC) of 0.9.'' We are not suggesting a specific tolerance, but believe nominal, based on best engineering practices, is essential to satisfactorily perform the test or achieve repeatability and should not have been deleted from the GTR language.

Agency Response: Inclusion of the ''nominal'' descriptor in specifying the PBC of the test surface is unacceptable from a compliance standpoint because it represents an unstated range of values. Specifying ''nominal PBC'' fails to limit the friction coefficient in an objective or useful way. Under the National Traffic and Motor Vehicle Safety Act, FMVSSs prescribed by NHTSA must be ''stated in objective terms.'' [66]

The agency's intent is not to require that high-friction brake tests be conducted only on surfaces with a PBC of exactly 0.9. Rather, the intent is to set a target PBC that acts as a reference point. In this way, those who are involved with brake system development, such as motorcycle manufacturers, can use test surfaces with any PBC below 0.9 in order to ensure compliance at least at the 0.9 level.[67] On the other hand, NHTSA, and laboratories conducting compliance tests, would use surfaces having a PBC of 0.9 or somewhat greater to allow a reasonable margin for friction variations and other test surface variables. As such, manufacturers are provided notice regarding what is required under the standard.

Keeping in mind that FMVSS are established to set *minimum* performance requirements, manufacturers presumably would want to design to a level that exceeds the minimum.[68] We believe specifying a PBC of 0.9 without further qualification is the best way to identify exactly what the safety standard requires and to eliminate the need for interpretation as to what is expected for compliance.

This approach of specifying an unqualified PBC is consistent with how surface peak friction coefficients are specified in FMVSS No. 121, *Air Brake Systems,*[69] FMVSS No. 135, *Light Vehicle Brake Systems,*[70] and in FMVSS No. 126, *Electronic Stability Control Systems.*[71] FMVSS No. 126 mandates Electronic Stability Control (ESC) systems on light vehicles, and establishes test procedures to ensure that ESC systems meet minimum requirements. In the rulemaking that established FMVSS No. 126, NHTSA originally proposed a tolerance around the surface PBC specification, but ultimately specified simply a PBC of 0.9 for the test surface in the final rule.[72] The agency explained that, although the proposed tolerance was an attempt to increase objectivity, such a tolerance created the possibility of compliance tests for FMVSS No. 126 being performed on lower friction coefficient surfaces than those for other braking standards, which is not the intention. NHTSA explained that while it is unlikely that any facility has a surface with exactly that friction coefficient, compliance testing for other braking standards is performed on a surface with a PBC/PFC slightly higher than the specification, i.e., slightly less-slippery than the surface required, which creates a margin for clear enforcement. Here, as in the ESC final rule, we will continue to use consistent compliance test conventions across all FMVSSs, and specify an unqualified surface PBC.

E. Test Sequence

The NPRM proposed a specific testing order to eliminate any potential effect of the test sequence on braking performance and to harmonize with the GTR. The proposed sequence was selected based on increasing severity of the test on the motorcycle and its brake components, in order to preserve the condition of the brakes.

The current FMVSS No. 122 specifies a particular sequence in which tests should be conducted, ending with the wet brake test. The fade test would have the greatest effect on the condition of the motorcycle brakes, which could affect brake performance in subsequent tests. For this reason, current FMVSS No. 122 specifies that a re-burnishing be conducted after the fade test, to refresh the brake components. In order to eliminate the need for re-burnishing, the GTR specifies that the fade test be the last of the motorcycle brake system performance tests.

The ABS test would be the next most severe test, which will result in braking at or near the limits of traction. Thus, the GTR specifies that the ABS test would precede the fade test, for motorcycles equipped with ABS. The remaining tests are not as severe on the brake system and tires, therefore the GTR sequenced them according to increasing test speed for the dry stop

[63] Honda Comment, Docket No. NHTSA–2008–0150–0018.1 at 2.

[64] For each FMVSS, NHTSA's Office of Vehicle Safety Compliance (OVSC) publishes detailed Laboratory Test Procedures for the purpose of providing guidelines for obtaining data in OVSC compliance testing programs and a uniform data recording format for NHTSA contractor laboratories. *See http://www.nhtsa.gov/Vehicle+Safety/Test+Procedures* (last accessed April 29, 2010). In the near future, NHTSA will likely revise the FMVSS No. 122 Test Procedure in accordance with this final rule.

[65] MIC Comments, Docket No. NHTSA–2008–0150–0017.1 at 1–2.

[66] 49 U.S.C. 30111(a). *See Chrysler Corp.* v. *NHTSA,* 472 F.2d 659, 675 (6th Cir. 1972) (discussing Congressional intent and explaining that ''objective criteria are absolutely necessary so that the question of whether there is compliance with the standard can be answered by objective measurement and without recourse to any subjective determination'').

[67] Surfaces with lower coefficients of friction are more slippery than surfaces with higher friction coefficients, and thus provide lower levels of braking force and poorer directional stability and control during braking.

[68] *See* 49 U.S.C. 30102(a)(8) (defining ''motor vehicle safety standard'' as a ''minimum standard for motor vehicle or motor vehicle equipment performance'').

[69] *See* 49 CFR 571.121, S5.3.1.1, S5.3.6.1, S6.1.7.

[70] *See* 49 CFR 571.135, S6.2.1.

[71] *See* 49 CFR 571.126, S6.2.2.

[72] *Federal Motor Vehicle Safety Standards, Electronic Stability Control Systems, Controls and Displays; Final Rule,* 72 FR 17236, 17267–17268 (2007).

performance tests, followed by the wet brake performance test. Consistent with the GTR, we proposed to specify the test sequence using a table in the regulation. The proposed test sequence table was identical to Table 1 here.

TABLE 1—PROPOSED TEST SEQUENCE

Test order	Paragraph
1. Dry stop—single brake control actuated	S6.3
2. Dry stop—all service brake controls actuated	S6.4
3. High speed	S6.5
4. Wet brake	S6.6
5. Heat fade*	S6.7
6. If fitted:	
6.1. Parking brake system	S6.8
6.2. ABS	S6.9
6.3. Partial failure, for split service brake systems	S6.10
6.4. Power-assisted braking system failure	S6.11

*Heat fade is always the last test to be carried out.

Harley-Davidson and the MIC both stated that the test sequence in Table 1 would be clearer if the procedures listed as items No. 5 and No. 6 were reversed.[73] They suggested that the heat fade test, listed as No. 5 in Table 1, should be listed last since it is always the last test in the sequence, even if procedures under No. 6 are required.

Agency Response: We note that the order in which the test procedures were listed in Table 1 corresponded to the paragraph number sequence of the regulatory text of the proposed safety standard. Also, the procedures listed under No. 6 in Table 1 are required only for certain equipment which may not be fitted to the test motorcycle, e.g., a parking brake or power-assisted brakes. Nevertheless, we agree it is clearer if the procedures appear in Table 1 in the same order in which they are to be performed. Therefore, we are changing the table in the regulatory text as requested, by putting the Heat Fade test at the end of the list. Table 2 illustrates how the table appears in the final regulatory text, which is referred to in paragraph S6.1.7, *Test Sequence.*

TABLE 2—TEST SEQUENCE SPECIFIED IN FINAL REGULATORY TEXT

Test order	Paragraph
1. Dry stop—single brake control actuated	S6.3
2. Dry stop—all service brake controls actuated	S6.4
3. High speed	S6.5
4. Wet brake	S6.6
5. If fitted:	
5.1. Parking brake system	S6.8
5.2. ABS	S6.9
5.3. Partial failure, for split service brake systems	S6.10
5.4. Power-assisted braking system failure	S6.11
6. Heat fade	S6.7

F. Brake Application Force Measurement

Controls for the application of the brakes can include hand and foot actuated control levers. The various national standards and regulations have slightly different brake control input force limits, and in the case of a hand actuated control lever, there is also a discrepancy as to the location of application of the input force. One consistent element is the location and direction of application of the input force to the foot actuated lever (i.e., pedal). Consistent with the GTR, the NPRM proposed input forces for each test in accordance with the national regulation on which the individual test is based, to minimize confusion. The respective input forces are noted in Table 3. A discussion on brake control actuation force specifications for evaluating motorcycles equipped with ABS is provided below in paragraph IV.G.

TABLE 3—INPUT FORCES ON HAND AND FOOT ACTUATED BRAKE CONTROL LEVERS

Regulation	Foot control, F_P (N)	Hand control, F_L (N)
FMVSS No. 122	$25 < F_P < 400$	$10 < F_L < 245$
UNECE Regulation No. 78/JSS 12–61	$F_P < 350$	$F_L < 200$

As discussed in the NPRM, with respect to the location of the input force on the hand-controlled lever, in developing the GTR, there was agreement that none of the three national regulations is clear enough with respect to measuring the location of the input force on the hand-controlled lever. In an effort to define a common practice, the GTR includes a revised description for the location of the input force on the control lever and its direction of application, based on ISO 8710:1995, *Motorcycles—Brakes and braking devices—tests and measurement methods.* Consistent with the GTR, the NPRM proposed the GTR's harmonized specification of input force in proposed paragraph S6.2.3. NHTSA is adopting this specification as proposed since no commenter mentioned this proposed requirement.

Finally, for those motorcycles that use hydraulic fluid for brake force transmission, the GTR stipulates that the master cylinder shall have a sealed, covered, separate reservoir for each brake system. This includes one or more separate reservoirs located within the same container, such as commonly found on passenger cars. Such containers may only have one sealed, covered filling cap. The proposed rule incorporated these hydraulic service brake system requirements in paragraph S5.1.9. Since no commenter mentioned this proposed regulatory text, we are adopting these provisions as proposed.

G. Brake Temperature Measurement

Brake test requirements typically specify that initial brake temperature (IBT) be measured at the start of each braking performance run to enhance test repeatability. The two measurement methods that are generally used in brake standards and regulations worldwide include (1) the use of plug-type thermocouples, and (2) the use of rubbing-type thermocouples. We proposed to retain the plug-type thermocouples brake temperature measurement method in FMVSS No. 122.

The two methods of measuring the IBT were included in the GTR and each Contracting Party could specify which temperature measurement would be accepted in its national regulation.

[73] MIC Comments, Docket No. NHTSA–2008–0150–0017.1 at 3; Harley-Davidson Comments, Docket No. NHTSA–2008–0150–0012 at 5.

FMVSS No. 122, as well as all the other brake standards in the Federal motor vehicle safety standards, currently specifies the plug-type thermocouple for measuring the initial brake temperature. NHTSA does not have experience using the rubbing-type thermocouple either in brake research or compliance testing. Given the limitations of the rubbing-type thermocouple described in the NPRM, we continue to believe that the plug-type thermocouple would be the more effective option for measuring IBT in the updated FMVSS No. 122. We did not receive any comment on this aspect of the proposal. Therefore, as in current FMVSS No. 122 and as in the proposed rule, updated FMVSS No. 122 will specify that initial brake temperature is measured by plug-type thermocouples.

With respect to the actual brake temperature values specified for testing purposes, consistent with the GTR, the NPRM proposed that FMVSS No. 122 specify as a test condition an IBT between 55 °C and 100 °C in order to encompass all brake systems. Since no commenter addressed this proposed test condition, today's final rule continues to specify this IBT range as a test condition for each test procedure for the reasons explained in the NPRM.

H. Burnishing Procedure

The current FMVSS No. 122 includes a burnishing procedure. In order to harmonize with the GTR, we proposed a slight variation of the current procedure, to include some aspects of procedures currently used by motorcycle manufacturers in preparation for UNECE Regulation No. 78/JSS 12–61 type approval testing.

The burnishing procedure serves as a conditioning of the foundation brake components to permit the brake system to achieve its full capability. Burnishing typically matches the friction components to one-another and results in more stable and repeatable stops during testing. All Federal motor vehicle safety standards for brake systems (FMVSS Nos. 105, 121, 122, and 135) currently include a burnishing procedure. The burnishing procedure of current FMVSS No. 122 specifies 200 stops with both brakes applied simultaneously, decelerating from a speed of 30 mph at 12 fps^2 with an IBT between 55 °C and 65 °C (130 °F and 150 °F).

As explained in the NPRM, the burnishing procedure in the GTR is based on FMVSS No. 122, but also includes some aspects of procedures currently used by motorcycle manufacturers in preparation for UNECE Regulation No. 78/JSS 12–61 type approval testing. For example, the GTR specifies burnishing the brakes separately since this would result in a more complete burnish for both front and rear brakes, as compared with the current FMVSS No. 122 method of using both brakes simultaneously. Hence, consistent with the GTR, the proposed rule specified that each brake be burnished for 100 decelerations.

Harley-Davidson commented that it may not be possible or necessary in the case of combined or split-service brake systems to actuate each brake separately for the burnishing procedure of the proposed rule.[74] Harley-Davidson, thus, recommended appending language such as ''unless a split service or combined brake system is present'' to the S6.2.5.2(c) burnishing test procedure specification.

Agency Response: The test condition specification in proposed paragraph S6.2.5.2(c) (*Brake application*) stated, ''Each service brake system *control* actuated separately.'' It did not say that the front and rear brakes have to be applied separately. The proposed language accurately conveys the intent of the requirement, which is that each control, if there is more than one control on the motorcycle, be actuated independently of any other brake controls.

The language suggested by Harley-Davidson would not account for combined brake systems having both hand lever and foot pedal controls. Under the procedure in S6.2.5.2(c), such a system would be burnished by applying the front lever of the CBS-equipped system (which could apply both front and rear brakes to varying degrees, depending on the CBS design) in a series of 100 stops, and then the burnishing would be repeated using the rear lever or pedal of the CBS-equipped system (which also could apply both front and rear brakes to varying degrees, depending on the CBS design) in a second series of 100 stops.

The intent of the contracting parties in developing separate burnish for front and rear brakes was to ensure a more complete burnish compared with the current FMVSS No. 122 where a 200-stop burnish procedure is required with simultaneous application of both brake controls. The current burnish procedure results in more variability of the brake burnish since the test rider determines the mix of front to rear brake forces used to attain the specified deceleration level during the burnish stops. The GTR burnish procedure ensures a more complete burnish for both brakes since each brake control is used separately. We are aware that for CBS-equipped motorcycles, the burnish procedure may provide a slightly higher level of burnish since a portion of the front and rear foundation brakes may be activated by both the hand lever and the foot pedal.

NHTSA believes that the language of the proposed procedure in S6.2.5.2(c) is consistent with our intent, and therefore, we elect not to modify the proposal as requested in this comment. Since no commenter mentioned any other aspect of the proposed burnishing procedure, we are adopting the burnishing procedure as proposed, for the reasons explained here and in the NPRM.[75]

I. Notice of Wear

The NPRM proposed the GTR requirement that ''friction material thickness shall be visible without disassembly, or where the friction material is not visible, wear shall be assessed by means of a device designed for that purpose.''[76] Current FMVSS No. 122 requires that the ''brake system [ ] be installed so that the lining thickness of drum brake shoes may be visually inspected, either directly or by use of a mirror without removing the drums, and so that disc brake friction lining thickness may be visually inspected without removing the pads.''[77] Allowing wear of friction material thickness to be assessed either visually or by means of a device increases design freedom while serving the same purpose of indicating friction material wear, without the need for disassembly. We did not receive comment on this aspect of the proposal and, therefore, are adopting this requirement as proposed.

IV. Specific Performance Test Improvements to FMVSS No. 122

Here, we discuss the proposed specific test procedures and performance criteria improvements to FMVSS No. 122, any comments received on these proposed improvements, and the agency's response to those comments. Where no comments were received on a proposed test procedure or performance criteria, or a certain aspect of those requirements, NHTSA has generally adopted those proposals in accordance with the rationale detailed in the NPRM. Although this final rule states as such for each amendment, we generally will not repeat the rationale and justification for aspects of the proposal that did not receive comment. We refer readers to

[74] Harley-Davidson Comments, Docket No. NHTSA–2008–0150–0012 at 4.

[75] *See* FMVSS No. 122 NPRM, 73 FR at 54026.

[76] *See* FMVSS No. 122 NPRM, 73 FR at 54038.

[77] 49 CFR 571.122, S5.1.5, *Other requirements.*

the NPRM for the basis for those amendments.[78]

A. Dry Stop Test—Single Brake Control Actuated

This final rule is adopting the proposed provision for a dry stop test with single brake control that is based on UNECE Regulation No. 78 and JSS 12–61 tests.[79] Currently, FMVSS No. 122 does not have a requirement that tests each brake system separately except for tests with the brakes in a pre-burnished condition. All other tests with the brake system fully operational require front and rear brake application simultaneously. In the main FMVSS No. 122 dry stop test with both brake controls actuated simultaneously, the test rider judges how to apportion the actuation force to the front and rear brakes. This may give less repeatable test results or allow the test rider to compensate for a ''weak'' brake. As such, an additional test specifying that each brake be tested individually will improve FMVSS No. 122.

The purpose of a dry stop test requirement with the separate actuation of each brake control is to ensure a minimum level of motorcycle braking performance on a dry road surface for each independent brake system. Current FMVSS No. 122 performance requirements are quite different as they specify motorcycles be tested in what is effectively the lightly-loaded condition,[80] and with all brake controls actuated simultaneously. The exception is the pre-burnish test requirements, which specify that each independently actuated service brake system must be capable of stopping the motorcycle (in effectively the lightly-loaded condition) within specified stopping distances.

The MIC and Harley-Davidson each pointed out in their comments that the proposed specification of brake actuation force for the single brake control actuated dry stop test in the NPRM regulatory text appeared to be missing a force value for motorcycle category 3–4 (proposed paragraph S6.3.2(d)(2)(ii)).[81] They pointed out that this test procedure specification should read ''≤ 500 N for motorcycle category 3–4'' instead of ''≤ for motorcycle category 3–4.'' No other commenter mentioned this proposed test procedure.

Agency Response: We agree with the commenters that the force value was missing from the paragraph S6.3.2(d)(2)(ii) test procedure specification. Consistent with the GTR, we have revised this paragraph to specify a foot control brake actuation force of 500 N for category 3–4 motorcycles. Since no commenter disagreed with the adoption of the proposed single brake control-actuated dry stop test, this final rule includes the dry stop test with single brake control based on UNECE Regulation No. 78/JSS 12–61 requirements, for the reasons explained in the NPRM. Unlike present UNECE/JSS standards, the requirement will specify only stopping distance as the measurement criterion and will not include MFDD as an optional criterion. When NHTSA conducts compliance testing, we will use stopping distance as the performance measure.

B. Dry Stop Test—All Service Brake Controls Actuated

This final rule is also adopting the proposed provision to test the service brakes with both brake controls applied simultaneously, which is very similar to the current FMVSS No. 122 dry stop test with both brake controls applied simultaneously. The purpose of this test with all service brake controls actuated is to evaluate the full braking performance of motorcycles from a speed of 100 km/h with both front and rear brakes applied simultaneously. These test parameters are relevant since they represent the typical operating conditions of a motorcycle with a single rider traveling at highway speeds. In addition, testing in the lightly loaded condition with a full brake application helps to evaluate motorcycle stability during braking. Since we did not receive comments on this performance test, this final rule is adopting this test procedure and performance criteria as proposed, for the reasons explained in the NPRM.

C. High-Speed Test

We are also adopting the proposed high-speed test, for the reasons largely explained in the NPRM. The purpose of the high-speed test is to evaluate the full braking performance of the motorcycle from a high speed and with both front and rear brakes applied simultaneously. The test is performed from a speed of 160 km/h or 0.8 of the vehicle's maximum speed (Vmax), whichever is less.

Based on the NHTSA/Transport Canada Review of Motorcycle Brake Standards,[82] it was determined during development of the GTR that 100 mph (160 km/h) or 0.8 Vmax is adequate for a high speed effectiveness test since the benefits of testing from higher speeds do not warrant the potential hazard to which the test rider is exposed. Consistent with the GTR, the high-speed test procedure specified in this final rule limits the test speed to 160 km/h to address test facility limitations and safety concerns. As proposed, this final rule also specifies that the high speed test be conducted with the motorcycle engine connected, i.e., with the clutch engaged, and the transmission in the highest gear, which has the effect of enhancing motorcycle stability during braking from high speeds.

The MIC noted a typographical error in the proposed regulatory text for the high-speed test in the specification for the initial brake temperature measurement.[83] The MIC correctly noted that, consistent with the GTR, the initial brake temperature should be specified as ''≥ 55 °C and ≤ 100 °C.''

Agency Response: We agree with the MIC that there was a typographical error in the proposed initial brake temperature test condition in the high-speed test procedure regulatory text, and that it should read as quoted above. The proposed regulatory text used two greater than or equal to symbols, instead of one greater than or equal to symbol, and one less than or equal to symbol. For the reasons explained above and in the NPRM, we are adopting the high-speed test procedure and performance criteria as proposed, with the correction noted above.

D. Wet Brake Test

This final rule is also adopting the proposed wet brake test provision, which differs from the current FMVSS No. 122 wet brake test in that instead of submerging the brake system in water and then testing the brakes, the water is sprayed directly onto the brakes during the test. This procedure is based on UNECE Regulation No. 78 and JSS 12–61, which the reviews of motorcycle

[78] *See* FMVSS No. 122 NPRM, 73 FR at 54023–54027.

[79] *See* FMVSS No. 122 NPRM, 73 FR at 54027.

[80] As mentioned above, current FMVSS No. 122 specifies that performance requirements must be met when the ''motorcycle weight is unloaded vehicle weight plus 200 pounds.'' 49 CFR 571.122, S6.1. ''Unloaded vehicle weight'' is defined under 49 CFR 571.3(b) to mean ''the weight of a vehicle with maximum capacity of all fluids necessary for operation of the vehicle, but without cargo, occupants, or accessories that are ordinarily removed from the vehicle when they are not in use.'' This current FMVSS No. 122 test mass condition is effectively equivalent to the mass condition ''lightly loaded'' in the proposed rule. Lightly loaded means the sum of unladen vehicle mass (mass of the vehicle with bodywork and all factory fitted equipment, and fuel tanks filled to at least 90 percent) and driver mass ''plus 15 kg for test equipment, or the laden condition, whichever is less.'' 73 FR 54020, 54037 (proposed FMVSS No. 122 S4, *Definitions*).

[81] MIC Comments, Docket No. NHTSA–2008–0150–0017.1 at 3; Harley-Davidson Comments, Docket No. NHTSA–2008–0150–0012 at 5.

[82] *See* Docket Nos. NHTSA–2008–0150–0005.1, NHTSA–2008–0150–0006.1.

[83] MIC Comments, Docket No. NHTSA–2008–0150–0017.1 at 3.

brake standards found to be more stringent than current FMVSS No. 122. Accordingly, we believe that motorcycle brake safety will be enhanced as a result of this change in wet brake test procedure. The purpose of the wet brake test is to ensure a minimum level of braking performance when the motorcycle is ridden in heavy rain conditions.

The wet brake performance evaluation specified in this final rule begins with a baseline test where each brake is tested separately and is required to decelerate a laden motorcycle at a specified rate, using the conditions of the dry stop test—single brake control actuated. For comparison, the same test is then repeated, but with a constant spray of water to wet the brakes. The difference in performance is evaluated immediately after the application of the respective brake, to ensure a minimum rise in deceleration performance with wet brakes. In addition, a drying brake can sometimes result in an excessively high pad friction leading to motorcycle instability and wheel lock; therefore a check for this ''over recovery'' is also included. Since we did not receive comments on this performance test, this final rule is adopting this test procedure and performance criteria as proposed, for the reasons explained here and in the NPRM.

E. Heat Fade Test

We are also adopting the proposed heat fade test provision, which is based on the UNECE Regulation No. 78 and JSS 12–61 fade test. As explained in the NPRM, the results from both stringency studies indicated that this fade test is more stringent than the current FMVSS No. 122 fade test. The heat fade test ensures that a minimum level of braking performance is maintained after numerous consecutive brake applications. In terms of real world conditions, this could be akin to frequent braking while driving in a busy suburban area or on a downhill gradient.

The adopted heat fade test requires that the brakes be tested separately, with the motorcycle loaded to its maximum mass capacity. The test begins with a baseline test with an IBT between 55 °C and 100 °C, which provides the benchmark for performance comparison and evaluation of the heated brakes. This is followed by 10 consecutive fade stops with the purpose of building heat within the brakes. The final performance test occurs with one stop immediately following the 10 fade stops. To evaluate brake fade performance, the procedure compares the stopping distance for the same brake pedal and lever actuation forces as used in the baseline test.

Minor adjustments were made to the UNECE Regulation No. 78 and JSS 12–61 fade test. The text for the performance criteria was revised to use the average brake control force from the baseline test, calculated from the measured values between 80 percent and 10 percent of the specified vehicle test speed. The brake heating procedure was also made more objective. UNECE Regulation No. 78 presently requires that the motorcycle decelerate to the lesser of 3 meters per second squared (m/s^2) or the maximum achievable deceleration rate with that brake control. For the purposes of the GTR, the latter performance requirement is made more objective by specifying that, at a minimum, the motorcycle must meet the deceleration rate for the dry stop test—single brake control actuated, as noted in Table 2 of the regulatory text. As noted above in section IIIB, this is different from MFDD.

Since we did not receive comments on this performance test, this final rule is adopting the heat fade test procedure and performance criteria as proposed, for the reasons explained here and in the NPRM.

F. Parking Brake System Test

This final rule is adopting the proposed parking brake test, which will improve upon the current FMVSS No. 122 parking brake system test by specifying a more stringent loading condition. The purpose of the parking brake system performance requirement is to ensure that motorcycles required to be equipped with parking brakes can remain stationary without rolling away when parked on an incline.

Consistent with the GTR, the test adopted in this final rule specifies that the parking brake system be capable of holding the motorcycle stationary for five minutes when tested in the laden condition (i.e., the maximum weight limit specified by the manufacturer) on an 18 percent grade, in both the forward and reverse directions (to the limit of traction of the braked wheels). In addition, like current FMVSS No. 122, the amended test procedure requires that the parking brake system be designed to retain engagement solely by mechanical means.

Honda noted that, in adopting section 4.8.3 of the GTR regulatory language on parking brakes, NHTSA's proposal parenthetically added ''to the limits of traction of the braked wheels'' to the performance requirements in paragraph S6.8.3 of the proposed FMVSS No. 122 regulatory text.[84] Honda suggested that this additional language would be more appropriately included in the parking brake test procedure, or section S6.8.2 of the regulatory text. The MIC made a similar comment.[85]

Agency Response: We agree that the added text would be more appropriately included in S6.8.2 rather than paragraph S6.8.3, as in the proposal. The regulatory text of the final rule reflects this change with the insertion of a new subparagraph under S6.8.2 (test conditions and procedures for parking brake system test) which states: ''The motorcycle must remain stationary to the limits of traction of the braked wheels.'' For the reasons explained above and in the NPRM, we are adopting the parking brake system test procedure and performance criteria as proposed, with the minor rearrangement of language noted here.

G. Antilock Brake System (ABS) Performance Test

Today's final rule does not require ABS but does contain ABS minimum performance requirements for motorcycles that are voluntarily equipped with this type of brake system. The purpose of the specified ABS test procedures is to assess the stability and stopping performance of a motorcycle with the ABS functioning.

These new tests, adopted from the GTR, include stopping distance performance requirements on high and low friction surfaces, wheel lock tests on high and low friction surfaces, and wheel lock tests for high to low friction and low to high friction surface transitions. In addition, the new performance requirements include an ABS failed systems performance test. Current FMVSS No. 122 does not include any ABS-specific performance requirements.

In the NPRM, NHTSA explained that we believe the ABS definition developed for the GTR is not as comprehensive as NHTSA's ABS definition which appears in three other Federal motor vehicle safety standards: FMVSS No. 105, *Hydraulic and Electric Brake Systems;* FMVSS No. 121, *Air Brake Systems;* and FMVSS No. 135, *Light Vehicle Brake Systems.* The two definitions are presented below:

- GTR Definition: *Antilock brake system* or *ABS* means a system which senses wheel slip and automatically modulates the pressure producing the braking forces at the wheel(s) to limit the degree of wheel slip.

[84] Honda Comments, Docket No. NHTSA–2008–0150–0018.1 at 2–3.

[85] MIC Comments, Docket No. NHTSA–2008–0150–0017.1 at 2.

• The current FMVSS Definition: *Antilock brake system* or *ABS* means a portion of a service brake system that automatically controls the degree of rotational wheel slip during braking by:

(1) Sensing the rate of angular rotation of the wheels;

(2) Transmitting signals regarding the rate of wheel angular rotation to one or more controlling devices which interpret those signals and generate responsive controlling output signals; and

(3) Transmitting those controlling signals to one or more modulators which adjust brake actuating forces in response to those signals.

The NPRM explained that we believe both definitions can be interpreted to mean the same thing. The NPRM sought comment on the proposed GTR definition and on the ABS definition used in the other braking standards. Since we did not receive comment on the definition of ABS, we are adopting the GTR definition, as proposed. However, we continue to believe that this is consistent with other FMVSSs, as both definitions above can be interpreted to mean the same thing.

During the development of the GTR, each of the ABS performance tests and their corresponding requirements was reviewed to assess their appropriateness for the proposed motorcycle brake system GTR.[86] This analysis is discussed in the NPRM and will not be repeated here except to the extent that it relates to comments received on the proposed ABS test procedures and performance criteria. Commenters were generally supportive of the adoption of the proposed ABS test procedures. Therefore, with the exception of the minor changes discussed below, we are adopting the ABS test procedures and performance criteria for the reasons explained here and in the NPRM.[87]

1. Low Friction Surface for ABS Testing

The proposed ABS test procedures included a wheel lock check and stopping distance performance requirement on a low friction surface, and wheel lock checks on a high-to-low and low-to-high surface transitions.[88] Harley-Davidson commented that the test tracks it utilizes to certify ABS systems rely upon water delivery to reduce the surface friction to the required level for the low friction surface tests.[89] Harley-Davidson expressed concern that the proposed regulatory text stated in paragraph S6.1.1.3 that the ASTM procedure to measure PBC be conducted ''without water delivery.'' Harley-Davidson stated that modifications needed to create a dry low friction surface would be costly and requested that NHTSA permit use of a wet surface as an alternative means of achieving the low friction surface test conditions.

Agency Response: It was not our intention to prevent use of a wetted surface for the low friction portion of the ABS test sequence. Paragraph S6.1.1.3 describes how the PBC of a dry surface is measured using the ASTM procedure but did not consider the need for measuring a wetted surface. We have deleted the phrase ''without water delivery'' from the S6.1.1.3 test procedure to allow for the use of either wet or dry low friction surfaces. We note that the description of a low friction surface (S6.1.1.2) states that it must be a ''clean and level surface,'' which allows it to be wetted, as compared with the description of the high friction surface (S6.1.1.1) which must be a ''clean, dry and level surface''.

2. Wheel Lock

Harley-Davidson pointed out in its comments that various performance requirements in the proposed ABS tests section (S6.9) prohibit wheel lock, but paragraph S6.9.1(d) specifies that wheel lock is allowed ''as long as the stability of the vehicle is not affected to the extent that it requires the operator to release the control or causes the vehicle to pass outside the test lane.'' [90] Harley-Davidson commented that it is unclear if the same language permitting limited wheel lock in S6.9.1(d) is implied in the subsequent procedures where it is stated that wheel lock shall not occur. Harley-Davidson requested that, if section S6.9.1(d) is in fact intended to define the term ''wheel lock'' generally for the whole safety standard, then the ''Wheel Lock'' definition in section S4 of the rule should be modified appropriately. The MIC also noted that the description of the term ''wheel lock'' in S6.9.1(d) is confusing given its use in subsequent paragraphs of S6.9.[91]

Agency Response: The limitation on ''wheel lock'' given in paragraph S6.9.1(d) is meant to apply to all of the ABS test procedures of section S6.9. NHTSA's intention was to permit in each of the test procedures the small degree of wheel lock that is typical of ABS operation, but to prohibit any greater degree of wheel lock. As explained in the NPRM, ''the regulatory text includes that wheel lock is allowed as long as the stability of the motorcycle is not affected to the extent that it requires the operator to release the control or causes the motorcycle to pass outside the test lane.'' [92] What NHTSA meant there was that in each of the S6.9 ABS test procedures (i.e., in S6.9.3, S6.9.4, S6.9.5, S6.9.6, and S6.9.7) where it specifies ''there shall be no wheel lock,'' the limited degree of wheel lock allowed for in S6.9.1(d) is permitted. To make this clearer, we have modified the appropriate text of each of those procedures as follows (added text is italicized): ''There shall be no wheel lock *except as provided in section S6.9.1(d)* and the vehicle wheels shall stay within the test lane.''

However, we disagree with Harley-Davidson's suggestion that the definitional language associated with wheel lock in section S6.9.1(d) should be added to the general definition of wheel lock in section S4 of FMVSS No. 122. The limited wheel lock allowed specifically in ABS tests is not allowable in other brake test procedures in the safety standard, particularly where a motorcycle is not equipped with ABS. Therefore, we are not amending the definition of the term ''Wheel Lock'' in section S4 of the regulatory text.

3. Tests With ABS Electrical Failure

As noted above, the proposed ABS performance tests included a test procedure to measure performance in the event of ABS electrical failure. Harley-Davidson pointed out in its comments that proposed section S6.9.8, *Stops with an ABS electrical failure,* requires the same test procedure as section S6.3, *Dry Stop Test—Single brake control actuated,* in the test sequence laid out in the FMVSS No. 122 proposal.[93] Harley-Davidson stated that, for a motorcycle with optional ABS, a test conducted under section S6.3 on a non-ABS-equipped version of the motorcycle is equivalent to a test conducted under section S6.9.8 on the motorcycle's ABS-equipped counterpart. Harley-Davidson requested that NHTSA permit the result of the S6.3 test be used for the S6.9.8 test, i.e., to allow non-ABS portions of the test sequence to be used to certify both non-

[86] *See* Docket No. NHTSA–2008–0150–0009.1.

[87] *See* FMVSS No. 122 NPRM, 73 FR at 54030–54032.

[88] *See* FMVSS No. 122 NPRM, 73 FR at 54042.

[89] Harley-Davidson Comments, Docket No. NHTSA–2008–0150–0012 at 3.

[90] Harley-Davidson Comments, Docket No. NHTSA–2008–0150–0012 at 4.

[91] MIC Comments, Docket No. NHTSA–2008–0150–0017.1 at 3.

[92] *See* FMVSS No. 122 NPRM, 73 FR at 54031.

[93] Harley-Davidson Comments, Docket No. NHTSA–2008–0150–0012 at 3–4.

ABS and ABS versions of the same motorcycle.

Agency Response: We are adopting the ABS electrical failure test procedure as proposed. The tests in S6.9.8 and S6.3 would be redundant only if ABS-equipped and non-ABS-equipped versions of a motorcycle were otherwise identical and, only if they have identical braking performance under ABS-disabled conditions. Although Harley-Davidson's products may fit this description, it is not necessarily true for all manufacturers. A manufacturer may decide at its own discretion to certify a motorcycle to section S6.9.8 based upon results of tests conducted under section S6.3, but we do not believe these circumstances are necessarily typical.

Furthermore, there is the question of test sequencing. A manufacturer has to certify that an ABS-equipped motorcycle can meet S6.9.8 after undergoing all preceding tests, including S6.3, when conducted in the order specified in the standard. For these reasons, we elect not to make any changes to the rule in this regard.

4. Other ABS-Related Comments

Statistical Study of ABS Effectiveness. The Insurance Institute for Highway Safety (IIHS) comment discussed its 2008 statistical study in which the IIHS estimated ABS effectiveness by analyzing motorcycle fatal crash data.[94] By comparing fatal crash frequency of ABS-equipped and non-ABS-equipped motorcycles, the IIHS concluded that ABS reduces fatal crash involvement significantly. IIHS commented that a related study by the Highway Loss Data Institute indicated that ABS also reduces collision losses significantly. The IIHS further stated that ''[t]he importance of equipping motorcycles with ABS increases as motorcycling continues to grow in popularity.'' The IIHS stated that it supports the proposed strengthening of FMVSS No. 122 and urged NHTSA to consider further changes to encourage or require ABS on all motorcycles.

Agency Response: NHTSA is well acquainted with the IIHS statistical study. NHTSA has not yet determined what action we might take in the area of advanced motorcycle braking. The agency may explore the possibility of mandating ABS on motorcycles as a requirement in FMVSS No. 122 as suggested by IIHS in a future rulemaking.

SMO-based ABS. The comment of SMO Group, L.L.C. (SMO), described a patented type of anti-lock system called Sliding Mode Observer ABS.[95] SMO stated that this type of ABS is licensed for non-commercial aircraft and uses the same hardware as current motorcycle ABS. SMO commented that the system can more accurately maintain wheel slip close to the optimal level by using sensing and control algorithms different from those of conventional ABS. The company stated that, in computer simulations of aircraft and rail applications, instead of the actual friction coefficient varying between ± 5% of the peak coefficient of friction, as with currently available ABS, the SMO-based system can keep within ± 0.5% of the peak level friction coefficient.

Agency Response: While we appreciate SMO's comment, the company provided few details about the Sliding Mode Observer system and did not include test data of any kind to substantiate their claims of improved ABS performance. Therefore, we have no basis for evaluating whether such a system improves significantly on current motorcycle ABS systems.

Furthermore, SMO did not make any specific request relating to NHTSA's proposed rule, such as changes to the regulatory text. SMO generally did not comment on NHTSA's effort to harmonize with the GTR other than to say that it would like to discuss its patented braking technology with NHTSA. As such, we are not making any changes to the updated FMVSS No. 122 regulatory text in response to this comment.

Regulatory Text Typographical Error. The MIC pointed out in its comments that there appeared to be some proposed regulatory text missing at paragraph S6.9.5.1(a), *Test Surfaces.*

Agency Response: We agree with the MIC that there was an omission in that paragraph of proposed regulatory text. We have revised paragraph S6.9.5.1(a) to specify that the test surface condition should be the ''[h]igh friction or low friction surface, as applicable.''

H. Partial Failure Test—Split Service Brake System

We are adopting the proposed partial failure test applicable to motorcycles equipped with split service brake systems, with the exception of the minor corrections explained below, for the reasons explained here and in the NPRM. The purpose of this test is to ensure that, in the event of a pressure component leakage failure in one of the hydraulic subsystems, a minimum level of braking performance is still available in the remaining hydraulic subsystem to allow the rider to bring the motorcycle to a stop. As explained in the NPRM, the proposed service brake system partial failure test was not substantially different from the current FMVSS No. 122 test. Its statement of applicability was modified to use the newly proposed motorcycle categories. Also, S5.1.10.1(a)(2) was written to require a warning lamp to be activated, without actuation of the brake control, when the brake fluid level in the master cylinder reservoir falls below the greater of two levels. However, the conjunction ''and'' rather than ''or'' was incorrectly used in the proposed regulatory text between the two levels. This has been corrected.

The MIC pointed out in its comments that one of the proposed performance requirements for this test, proposed paragraph S6.10.4(a), required the braking system to comply with the failure warning requirements ''set out in paragraph 3.1.11'' when the test was performed with one of the subsystems deactivated. The MIC noted that the reference to paragraph 3.1.11 was incorrect, and suggested instead that the regulatory text should have referred to paragraph S5.1.10.

Agency Response: We agree that the reference to ''paragraph 3.1.11'' in proposed S6.10.4(a) was inadvertently copied from the GTR regulatory text. The correct reference to the failure warning requirements in the FMVSS No. 122 regulatory text is S5.1.10.1, *Split service brake system warning lamps,* and we have amended the regulatory text in this final rule accordingly.

I. Power-Assisted Braking System Failure Test

Since no commenter mentioned the proposed power-assisted braking system failure test, this final rule adopts the test as proposed, for the reasons explained in the NPRM. The new power-assisted braking system failure test does not require power-assisted braking systems but does contain performance requirements for when such brake systems fail, to ensure minimum brake system performance in motorcycles that are so equipped. The current FMVSS No. 122 does not have any performance requirements to test the failure of a power-assisted braking system because the application of power-assisted braking systems on motorcycles is relatively new. Certifying to the performance requirement is not required if the motorcycle is equipped with another separate service brake system that operates without power-assist.

[94] Insurance Institute for Highway Safety Comments, Docket No. NHTSA–2008–0150–0015.1.

[95] SMO Group, L.L.C. Comments, Docket No. NHTSA–2008–0150–0013.1.

V. Other Comments and Technical Amendments

A. Labeling Requirements

The proposed regulatory text in the NPRM did not include a few labeling requirements that were in FMVSS No. 122, since the GTR did not cover labeling. Since we still believe these labeling requirements are useful, and did not intend to remove those labeling requirements in updating FMVSS No. 122, we are including them in the final rule. We believe this will not be burdensome for motorcycle manufacturers because they are already including these labels on the relevant pieces of motorcycle equipment.

Currently, FMVSS No. 122 requires a brake fluid warning label to be provided on the brake fluid reservoir.[96] FMVSS No. 122 also requires that a label be provided for the brake failure indicator lamp.[97] These required labels identify important safety features and safety-related information, and they have longstanding applicability in FMVSS No. 122.

For the fluid reservoir label, we have inserted new language in the regulatory text under the general requirements section S5.1.9, *Hydraulic Service Brake System.* The new subsection, S5.1.9(d), closely reflects the requirements in section S5.1.2.2 of the existing FMVSS No. 122 safety standard. This new subsection identifies the wording, location, and other characteristics of the warning statement. Specifically, it requires that the warning statement: (1) Have lettering at least 3/32 of an inch high; (2) that it be located on or within 4 inches of the filler cap so as to be visible by direct viewing; and (3) that it be permanently affixed and of a contrasting color, or else be either engraved or embossed.

As for labeling of the failure indicator lamp, this lamp is required for split-service brake systems and ABS-equipped brake systems, as specified in section S5.1.10 of the updated FMVSS No. 122 regulatory text. However, the label should be different for each of those types of brake systems. Consequently, the warning lamp label specifications for split service brake systems are listed separately from those for ABS-equipped systems.

For split service systems, we have inserted new paragraph S5.1.10.1(c) which requires each indicator lamp to have the legend ''Brake Failure'' on or adjacent to it in letters not less than 3/32 of an inch high that shall be legible to the driver in daylight when lighted. This is identical to the current FMVSS No. 122 failure indicator lamp label requirement in paragraph S5.1.3.1(d).

Since the existing FMVSS No. 122 did not have ABS performance requirements, there were no existing labeling requirements for ABS failure in FMVSS No. 122. The GTR, and NPRM, did specify that all motorcycles equipped with ABS must also be fitted with a yellow warning lamp to activate whenever there is a malfunction that affects the generation or transmission of signals in the motorcycle's ABS system. However, consistent with other FMVSS addressing ABS system failure,[98] and consistent with the FMVSS that governs and standardizes control, telltales, and indicators, FMVSS No. 101, *Controls and Displays,* motorcycle brake ABS system failure should be indicated with the words ''Antilock'' or ''Anti-lock'' or ''ABS.'' [99] For ABS-equipped systems, we have modified section S5.1.10.2 by breaking the existing proposed text of that section into two paragraphs, identified as ''(a)'' and ''(b),'' and by adding the label requirement under new paragraph ''(c)'' which specifies: ''The indicator shall be labeled in letters at least 3/32 of an inch high with the words 'Antilock' or 'Anti-lock' or 'ABS' in accordance with Table 1 of Standard No. 101 (49 CFR 571.101).''

B. Versions of ASTM Standards

ASTM International commented that NHTSA's proposal makes reference to a version of an ASTM standard that is not the latest version.[100] The proposal refers to version E1337–90(2002) of ASTM's ''Standard Test Method for Determining Longitudinal Peak Braking Coefficient of Paved Surfaces Using Standard Reference Test Tire.'' ASTM pointed out that there is a more recent version, ASTM E1337–90(2008). ASTM asked that references to ASTM standards be done in a way that does not cite any particular version, so that the latest version will always be applicable. Specifically, ASTM requested that NHTSA reference the ''Standard Test Method for Determining Longitudinal Peak Braking Coefficient of Paved Surfaces Using Standard Reference Test Tire'' only as ''ASTM E1137.'' ASTM's comment also would apply to another standard, ASTM E1136, ''Standard Specification for A Radial Standard Reference Tire.'' The NPRM proposed to refer to the ASTM E1136–93(2003) version of that standard.

Agency Response: We are unable to accede to ASTM's request. Incorporation of industry standards or other materials by reference into the Code of Federal Regulations can only be accomplished with the approval of the Director of the Office of the Federal Register, National Archives and Records Administration.[101] The Office of the Federal Register requires regulatory text that incorporates industry standards or other materials by reference to identify the standard or material to be incorporated by title, date, edition, author, publisher, and identification number of the publication.[102]

Further, from a compliance standpoint, it is important to reference a specific version of an industry standard, such as an ASTM procedure, so that regulated entities are on notice regarding the version of the industry recommended practice to which they will be held accountable under a Federal safety standard. NHTSA cannot reference an industry standard in such a way that the underlying procedures in a Federal safety standard are subject to being changed unilaterally, and without notice, by an independent entity such as ASTM. Otherwise, the requirements of the FMVSS could be changed without NHTSA's or the public's knowledge or approval, and without the prerequisite administrative process including public notice and comment. We will, however, reference the 2008 version of ASTM E1136–93, as it is unchanged from the 2003 version.

C. Terminology

The MIC commented that NHTSA should substitute the word used to reference a type or category of motorcycle, ''type,'' as it was used in S5.1, *Brake System Requirements,* with the word ''category.''[103]

Agency Response: Since the latter term is the one used in the definitions of the five different types of motorcycles in S4, *Definitions,* we agree with this change and have revised the regulatory text accordingly.

[96] 49 CFR 571.122, S5.1.2.2 (2009).

[97] 49 CFR 571.122, S5.1.3.1(d) (2009).

[98] *See, e.g.,* 49 CFR 571.121, S5.1.6.2 (2009).

[99] *See, e.g.,* 49 CFR 571.101, Table 1 (2009).

[100] ASTM International Comments, Docket No. NHTSA–2008–0150–0011.1.

[101] Congress authorized incorporation by reference, only with the approval of the Director of the Federal Register, in the Freedom of Information Act to reduce the volume of material published in the **Federal Register** and Code of Federal Regulations. 5 U.S.C. 552, as amended by Public Law 104–231, 100 Stat. 3048 (1996).

[102] National Archives and Records Administration, Office of the Federal Register, *Federal Register Document Drafting Handbook,* § 6.4 (October 1998 Revision), *available at http://www.archives.gov/federal-register/write/resources.html* (last accessed May 14, 2010).

[103] MIC Comments, Docket No. NHTSA–2008–0150–0017.1 at 3.

VI. Compliance Date

The NPRM explained that NHTSA had tentatively determined that virtually all of the current motorcycle fleet would comply with the proposal, if made final. Therefore, we proposed to make the upgraded requirements mandatory at the beginning of the first September that is two full years after publication of a final rule. The NPRM proposed that optional early compliance would be permitted on and after 30 days after the date of publication of a final rule in the **Federal Register**.

Two commenters, Harley-Davidson and the MIC, requested that additional lead time be allowed for phase-in of the amended FMVSS No. 122 requirements as they apply to three-wheeled motorcycles of category 3–5 [104] as defined in both the GTR and the NPRM.[105] They stated that the proposal contains new brake system requirements for this type of three-wheeler in that split-service or combined brakes will be required instead of merely allowed. They requested an additional year of lead time beyond the two-year minimum lead time of the proposal.

Agency Response: We agree that some category 3–5 motorcycles potentially will need re-engineering of their brake systems and that additional lead time is appropriate. Therefore, for category 3–5 motorcycles, the updated FMVSS No. 122 promulgated in today's final rule will be mandatory no later than the beginning of the first September that is three full years after publication of today's final rule. This will provide a total of at least three years of lead time for category 3–5 motorcycles. For all other motorcycle categories, compliance with the updated FMVSS No. 122 must occur no later than the beginning of the first September that is two full years after publication of today's final rule, as proposed in the NPRM.

The precise compliance dates for each motorcycle category are set forth, as applicable, in § 571.122, S3. Optional early compliance is permitted on and after 60 days after the date of publication of a final rule in the **Federal Register**. The optional early compliance date was changed from the 30 days proposed in the NPRM to coincide with the date on which the text of the Code of Federal Regulations is amended. To accommodate the extra year of lead time for category 3–5 motorcycles and the optional early compliance, we are retaining the text of current version of FMVSS No. 122 in a new Standard, FMVSS No. 122a. We are amending paragraph S3 of the redesignated FMVSS No. 122a to limit its applicability to motorcycles not certified to the new FMVSS No. 122.

We are also including in this final rule a technical correction to 49 CFR 571.5. When NHTSA published a final rule in January 2012 consolidating all of the standards and practices that are incorporated by reference in the FMVSSs into § 571.5, the agency inadvertently incorporated an incorrect version of ASTM E274–70, ''Skid Resistance of Paved Surfaces Using a Full-Scale Tire,'' into FMVSS Nos. 105 and 122.[106] The version that was incorporated by reference in January 2012 was the original 1970 version of the standard, which is different from the version that had been previously incorporated by reference into FMVSS Nos. 105 and 122, which includes editorial changes made in July 1974. This final rule corrects this error, and incorporates the correct version of ASTM E274–70 into FMVSS No. 105 and the newly redesignated FMVSS No. 122a.

VII. Costs and Benefits

Although this final rule adds and updates FMVSS No. 122 test procedures, we anticipate that virtually all motorcycles sold in the U.S. can meet the performance requirements in this final rule, and thus, the agency has not been able to quantify safety benefits from the proposal. However, NHTSA believes that the performance requirements promulgated in today's final rule will help ensure the safety of motorcycle brake systems and thus have a beneficial effect on safety. The final rule includes several tests that will update and enhance performance requirements—tests both at the fully loaded condition (''laden'') and lightly-loaded vehicle weight, which ensure adequate braking performance at the two extremes of the loading conditions; a wet brake test that is more representative of the manner in which brakes are wetted during real world riding in wet conditions; a variety of ABS performance tests, for motorcycles so equipped, to ensure adequate antilock performance during emergency braking or on slippery road conditions; and a new test in the event of a failure in the power-assisted braking system, if a motorcycle is so equipped.

Moreover, as mentioned above, motorcycle manufacturers and, ultimately, consumers both here and abroad can expect to achieve cost savings through the formal harmonization of differing sets of standards when the Contracting Parties to the 1998 Agreement implement the Motorcycle Brake Systems GTR. Harmonization enables motorcycle manufacturers to test their models to just one regulation/series of tests to sell globally.

We believe that, although the final rule adds some new requirements to FMVSS No. 122 and replaces some test procedures and performance requirements with ones based on more stringent standards used in another national regulation, none of the new tests will result in measurable costs to motorcycle purchasers. The rule includes performance requirements that constitute the best practices from various standards and regulations. Some of the tests, such as the wet brake test, the ABS performance requirements, and the tests in the loaded condition, are an upgrade to the existing FMVSS No. 122. But current FMVSS No. 122 does not reflect the advancement of modern braking technologies, and almost all motorcycles sold in the U.S. can meet the performance requirements as proposed without any major design changes. The agency believes that motorcycles sold in the U.S. market can comply with the requirements of ECE Regulation No. 78 and JSS 12–61 without any modifications, and that motorcycles sold in the European and Japanese markets can meet U.S. FMVSS No. 122. As a result, any costs for design changes by motorcycle manufacturers to comply with the final rule performance requirements are expected to be minimal and would be offset by the elimination of some test procedures previously in FMVSS No. 122. We expect that, for manufacturers who certify compliance by conducting NHTSA's test procedures, the changes in the compliance test procedures would result in a cost savings of less than one-tenth of a cent per motorcycle.

No commenter addressed the agency's assessment of costs and benefits in the NPRM. However, we have considered Harley-Davidson's comment that some three-wheeled motorcycles would need to have their brake systems redesigned to meet the new brake system requirements for category 3–5 motorcycles. We agree that a limited number of motorcycles will need to be redesigned to comply with the upgraded FMVSS No. 122. We estimate that about

[104] Category 3–5 motorcycles are defined in S3 as motorcycles ''manufactured with three wheels symmetrically arranged in relation to the longitudinal median plane with an engine cylinder capacity in the case of a thermic engine exceeding 50 cm^3 or whatever the means of propulsion a maximum design speed exceeding 50 km/h.'' This category includes primarily ''trikes'' and excludes motorcycles with sidecars, which are category 3–4 motorcycles.

[105] MIC Comments, Docket No. NHTSA–2008–0150–0017.1 at 2; Harley-Davidson Comments, Docket No. NHTSA–2008–0150–0012 at 1–2.

[106] 77 FR 751 (Jan. 6, 2012).

8,000 category 3–5 motorcycles will need to be equipped with a split service brake system, which includes a dual master cylinder. A 2004 NHTSA report estimate the cost of upgrading to a dual master cylinder at a cost of $10.88 per motorcycle in 2002 dollars.[107] Adjusting that cost for inflation results in a cost of $13.38 in 2011 dollars. We anticipate that, based on recent sales numbers of three-wheeled motorcycles, approximately 8,000 motorcycles would need to be equipped with a dual master cylinder. Thus, we believe that the total annual cost of the upgrade necessary to the limited number of three-wheeled motorcycles as a result of today's final rule is approximately $107,040.

VIII. Regulatory Analyses and Notices

A. Vehicle Safety Act

Under 49 U.S.C. Chapter 301, *Motor Vehicle Safety* (49 U.S.C. 30101 *et seq.*), the Secretary of Transportation is responsible for prescribing motor vehicle safety standards that are practicable, meet the need for motor vehicle safety, and are stated in objective terms. 49 U.S.C. 30111(a). When prescribing such standards, the Secretary must consider all relevant, available motor vehicle safety information. 49 U.S.C. 30111(b). The Secretary must also consider whether a proposed standard is reasonable, practicable, and appropriate for the type of motor vehicle or motor vehicle equipment for which it is prescribed and the extent to which the standard will further the statutory purpose of reducing traffic accidents and associated deaths. *Id.* Responsibility for promulgation of Federal motor vehicle safety standards was subsequently delegated to NHTSA. 49 U.S.C. 105 and 322; delegation of authority at 49 CFR 1.50.

The agency carefully considered these statutory requirements in adopting these amendments to FMVSS No. 122. The amendments to FMVSS No. 122 are practicable. This document does not adopt significant changes to the current performance requirements of FMVSS No. 122. Currently, we believe that essentially all motorcycle brakes will meet or exceed the performance criteria specified in the adopted test procedures. Additionally, the amendments will harmonize the U.S. requirements with the Motorcycle Brake Systems Global Technical Regulation.

These amendments are appropriate for the vehicles subject to the performance requirements. Today's final rule continues to exclude motorcycles for which the requirements and test procedures are impractical or unnecessary (e.g., low-speed motorcycles, categories 3–1 and 3–2, continue to be excluded from the heat fade test).

Finally, the agency has determined that the amendments provide objective procedures for determining compliance. The test procedures have been evaluated by the agency, and we have determined that they help achieve repeatable and reproducible results. Further, we are adopting test procedures to provide improved objectivity to existing performance requirements.

B. Executive Order 12866, Executive Order 13563, and DOT Regulatory Policies and Procedures

NHTSA has considered the impacts of this rulemaking action under Executive Order 12866, Executive Order 13563, and the Department of Transportation's (DOT's) related policies and procedures. This rulemaking is not considered significant and was not reviewed by the Office of Management and Budget under E.O. 12866. Given the minimal impacts of the proposed rule, we have not prepared a full regulatory evaluation in accordance with the Department's Regulatory Policies and Procedures.[108] The factual basis supporting this finding is as follows.

This final rule amends test procedures and performance requirements, but would impose minimal additional costs on manufacturers. We believe virtually all motorcycles presently manufactured for the U.S. market can meet these new performance requirements. Thus, this final rule is not expected to require design changes to nearly all current motorcycles. As discussed in section VII above, a limited number of three-wheeled motorcycles would need design changes to include a dual master cylinder at a cost of $13.38 per motorcycle in 2011 dollars. Thus, the total cost of this rule on the motorcycle industry is expected to be approximately $107,040 per year.

We have considered whether the new compliance tests NHTSA will conduct under this final rule will result in additional costs to certify motorcycles as compliant with these performance requirements. The number of tests in the new test procedure (66) is less than the number of tests in the existing FMVSS No. 122 test procedure (72), even though this final rule adds additional tests for motorcycles equipped with ABS. Not all motorcycles are equipped with ABS, and those motorcycles will be subjected to fewer tests as we harmonize our motorcycle braking standards with European and Japanese standards and delete unnecessary tests. For example, this final rule eliminates a reburnishing of the brakes in the existing FMVSS No. 122 test procedure. We have determined that, for manufacturers that certify compliance by conducting NHTSA's test procedures, this final rule would result in a net cost savings of less than one-tenth of a cent per motorcycle.

NHTSA is not able to quantify direct safety benefits from this rule in terms of the number of injuries and fatalities prevented. However, this final rule adds braking tests for motorcycles with antilock brakes. NHTSA believes that those tests will help ensure the safety of motorcycle brake systems.

C. Executive Order 13132 (Federalism)

NHTSA has examined today's final rule pursuant to Executive Order 13132 (64 FR 43255, August 10, 1999) and concluded that no additional consultation with States, local governments or their representatives is mandated beyond the rulemaking process. The agency has concluded that the rulemaking would not have sufficient federalism implications to warrant consultation with State and local officials or the preparation of a federalism summary impact statement. The final rule would not have ''substantial direct effects on the States, on the relationship between the national government and the States, or on the distribution of power and responsibilities among the various levels of government.''

NHTSA rules can preempt in two ways. First, the National Traffic and Motor Vehicle Safety Act contains an express preemption provision: When a motor vehicle safety standard is in effect under this chapter, a State or a political subdivision of a State may prescribe or continue in effect a standard applicable to the same aspect of performance of a motor vehicle or motor vehicle equipment only if the standard is identical to the standard prescribed under this chapter. 49 U.S.C. 30103(b)(1). It is this statutory command by Congress that preempts any non-identical State legislative and administrative law addressing the same aspect of performance.

The express preemption provision described above is subject to a savings clause under which ''[c]ompliance with a motor vehicle safety standard

[107] Cost and Weight Added by the Federal Motor Vehicle Safety Standards for Model Years 1968–2001 in Passenger Cars and Light Trucks (NHTSA Report No. DOT HS 809 834), December 2004, p. 21–23.

[108] Department of Transportation, *Adoption of Regulatory Policies and Procedures,* 44 FR 11034 (Feb. 26, 1979).

prescribed under this chapter does not exempt a person from liability at common law.'' 49 U.S.C. 30103(e) Pursuant to this provision, State common law tort causes of action against motor vehicle manufacturers that might otherwise be preempted by the express preemption provision are generally preserved. However, the Supreme Court has recognized the possibility, in some instances, of implied preemption of such State common law tort causes of action by virtue of NHTSA's rules, even if not expressly preempted. This second way that NHTSA rules can preempt is dependent upon there being an actual conflict between an FMVSS and the higher standard that would effectively be imposed on motor vehicle manufacturers if someone obtained a State common law tort judgment against the manufacturer, notwithstanding the manufacturer's compliance with the NHTSA standard. Because most NHTSA standards established by an FMVSS are minimum standards, a State common law tort cause of action that seeks to impose a higher standard on motor vehicle manufacturers will generally not be preempted. However, if and when such a conflict does exist—for example, when the standard at issue is both a minimum and a maximum standard—the State common law tort cause of action is impliedly preempted. See *Geier* v. *American Honda Motor Co.,* 529 U.S. 861 (2000).

Pursuant to Executive Order 13132 and 12988, NHTSA has considered whether this rule could or should preempt State common law causes of action. The agency's ability to announce its conclusion regarding the preemptive effect of one of its rules reduces the likelihood that preemption will be an issue in any subsequent tort litigation.

To this end, the agency has examined the nature (e.g., the language and structure of the regulatory text) and objectives of today's rule and finds that this rule, like many NHTSA rules, prescribes only a minimum safety standard. As such, NHTSA does not intend that this rule preempt state tort law that would effectively impose a higher standard on motor vehicle manufacturers than that established by today's rule. Establishment of a higher standard by means of State tort law would not conflict with the minimum standard announced here. Without any conflict, there could not be any implied preemption of a State common law tort cause of action.

D. Executive Order 13045

Executive Order 13045 applies to any rulemaking that: (1) Is determined to be ''economically significant'' as defined under Executive Order 12866, and (2) concerns an environmental, health or safety risk that NHTSA has reason to believe may have a disproportionate effect on children.[109] If the regulatory action meets both criteria, we must evaluate the environmental health or safety effects of the planned rule on children, and explain why the planned regulation is preferable to other potentially effective and reasonably feasible alternatives considered by us.

This rulemaking is not subject to the Executive Order because it is not economically significant as defined in Executive Order 12866. It also does not involve decisions based on health risks that disproportionately affect children.

E. Executive Order 12988 (Civil Justice Reform)

With respect to the review of the promulgation of a new regulation, section 3(b) of Executive Order 12988, ''Civil Justice Reform,'' requires that Executive agencies make every reasonable effort to ensure that the regulation: (1) Specifies in clear language the preemptive effect; (2) specifies in clear language the effect on existing Federal law or regulation, including all provisions repealed, circumscribed, displaced, impaired, or modified; (3) provides a clear legal standard for affected conduct rather than a general standard, while promoting simplification and burden reduction; (4) specifies in clear language the retroactive effect; (5) specifies whether administrative proceedings are to be required before parties may file suit in court; (6) explicitly or implicitly defines key terms; and (7) addresses other important issues affecting clarity and general draftsmanship of regulations.[110] This document is consistent with that requirement.

Pursuant to this Order, NHTSA notes as follows. The preemptive effect of this proposed rule is discussed above. NHTSA notes further that there is no requirement that individuals submit a petition for reconsideration or pursue other administrative proceeding before they may file suit in court.

F. Regulatory Flexibility Act

Pursuant to the Regulatory Flexibility Act (5 U.S.C. 601 *et seq.,* as amended by the Small Business Regulatory Enforcement Fairness Act (SBREFA) of 1996) whenever an agency is required to publish a notice of rulemaking for any proposed or final rule, it must prepare and make available for public comment a regulatory flexibility analysis that describes the effect of the rule on small entities (i.e., small businesses, small organizations, and small governmental jurisdictions). However, no regulatory flexibility analysis is required if the head of an agency certifies the rule would not have a significant economic impact on a substantial number of small entities. The SBREFA amended the Regulatory Flexibility Act to require Federal agencies to provide a statement of the factual basis for certifying that a rule would not have a significant economic impact on a substantial number of small entities.

We have considered the effects of this rulemaking action under the Regulatory Flexibility Act (5 U.S.C. 601 *et seq.*) and certify that this final rule will not have a significant economic impact on a substantial number of small entities. The agency is not currently aware of any motorcycle manufacturer that is considered a small business. The brake systems installed on motorcycles are typically developed by one of the major brake component suppliers, which are independent companies. There are cases where the motorcycle manufacturer may perform some of the brake system design and development in-house, and have the system components manufactured by an outside supplier. NHTSA does not consider any of these businesses to be small business entities that would be significantly economically impacted by this rulemaking.

G. National Environmental Policy Act

We have analyzed this proposed amendment for the purposes of the National Environmental Policy Act and determined that it would not have any significant impact on the quality of the human environment.

H. Paperwork Reduction Act

Under the Paperwork Reduction Act of 1995, a person is not required to respond to a collection of information by a Federal agency unless the collection displays a valid Office of Management and Budget (OMB) control number. The rule does not contain any new information collection requirements.

I. National Technology Transfer and Advancement Act

Section 12(d) of the National Technology Transfer and Advancement Act of 1995 (NTTAA) directs us to use voluntary consensus standards in regulatory activities unless doing so would be inconsistent with applicable

[109] Exec. Order No. 13045, 62 FR 19885 (Apr. 23, 1997).

[110] Exec. Order No. 12988, 61 FR 4729 (Feb. 7, 1996).

law or otherwise impractical.[111] Voluntary consensus standards are technical standards (e.g., materials specifications, test methods, sampling procedures, and business practices) that are developed or adopted by voluntary consensus standards bodies, such as the Society of Automotive Engineers (SAE) and the American Society for Testing and Materials (ASTM). The NTTAA directs us to provide Congress, through OMB, explanations when we decide not to use available and applicable voluntary consensus standards.

ASTM E1136–93, *Standard Specification for a Radial Standard Reference Test Tire,* and ASTM Method E1337–90, *Standard Test Method for Determining Longitudinal Peak Braking Coefficient of Paved Surfaces Using a Standard Reference Test Tire,* are incorporated by reference in the regulatory text. This is consistent with the NTTAA because these are industry voluntary consensus standards.

J. Unfunded Mandates Reform Act

Section 202 of the Unfunded Mandates Reform Act of 1995 (UMRA) requires Federal agencies to prepare a written assessment of the costs, benefits and other effects of proposed or final rules that include a Federal mandate likely to result in the expenditure by State, local or tribal governments, in the aggregate, or by the private sector, of more than $100 million in any one year (adjusted for inflation with base year of 1995).[112] Before promulgating a NHTSA rule for which a written statement is needed, section 205 of the UMRA generally requires us to identify and consider a reasonable number of regulatory alternatives and adopt the least costly, most cost-effective or least burdensome alternative that achieves the objectives of the rule.[113] The provisions of section 205 do not apply when they are inconsistent with applicable law. Moreover, section 205 allows us to adopt an alternative other than the least costly, most cost-effective or least burdensome alternative if we publish with the final rule an explanation why that alternative was not adopted.

Today's final rule will not impose any unfunded mandates under the Unfunded Mandates Reform Act of 1995. This rulemaking does not meet the definition of a Federal mandate because it would not result in costs of $100 million or more to either State, local, or tribal governments, in the aggregate, or to the private sector. Thus, this rulemaking is not subject to the requirements of sections 202 and 205 of the UMRA.

K. Regulation Identifier Number (RIN)

The Department of Transportation assigns a regulation identifier number (RIN) to each regulatory action listed in the Unified Agenda of Federal Regulations. The Regulatory Information Service Center publishes the Unified Agenda in April and October of each year. You may use the RIN contained in the heading at the beginning of this document to find this action in the Unified Agenda.

L. Privacy Act

Anyone is able to search the electronic form of all comments received into any of our dockets by the name of the individual submitting the comment (or signing the comment, if submitted on behalf of an association, business, labor union, etc.). You may review DOT's complete Privacy Act Statement in the **Federal Register** published on April 11, 2000.[114] You may also visit *http://www.regulations.gov/search/Regs/home.html#privacyNotice* (last accessed May 17, 2010).

List of Subjects in 49 CFR Part 571

Incorporation by reference, Motor vehicle safety, Reporting and recordkeeping requirements, Tires.

In consideration of the foregoing, NHTSA amends 49 CFR part 571 as follows:

PART 571—FEDERAL MOTOR VEHICLE SAFETY STANDARDS

■ 1. The authority citation for Part 571 continues to read as follows:

Authority: 49 U.S.C. 322, 30111, 30115, 30117 and 30166; delegation of authority at 49 CFR 1.50.

■ 2. Amend § 571.5 by revising paragraphs (d)(29), (32), and (33), redesignating paragraphs (i) through (l) as paragraphs (j) through (m), and adding new paragraph (i) to read as follows:

§ 571.5 Matter incorporated by reference.

* * * * *

(d) * * *

(29) ASTM E274–70, ''Standard Method of Test for Skid Resistance of Paved Surfaces Using a Full-Scale Tire,'' revised July 1974, into §§ 571.105; 571.122a.

* * * * *

(32) ASTM E1136–93 (Reapproved 2003), ''Standard Specification for a Radial Standard Reference Test Tire,'' approved March 15, 1993, into §§ 571.105; 571.121; 571.122; 571.126; 571.135; 571.139; 571.500.

(33) ASTM E1337–90 (Reapproved 2008), ''Standard Test Method for Determining Longitudinal Peak Braking Coefficient of Paved Surfaces Using a Standard Reference Test Tire,'' approved June 1, 2008, into §§ 571.105; 571.121; 571.122; 571.126; 571.135; 571.500.

* * * * *

(i) International Organization for Standardization (ISO), 1, ch. de la Voie-Creuse, CP 56, CH–1211 Geneva 20, Switzerland. Telephone: +41 22 749 01 11. Fax: +41 22 733 34 30. Web site: *http://www.iso.org/.*

(1) ISO 7117:1995(E), ''Motorcycles—Measurement of maximum speed,'' Second edition, March 1, 1995, into § 571.122.

(2) [*Reserved*]

* * * * *

§ 571.122 [Redesignated as § 571.122a]

■ 3. Redesignate § 571.122 as § 571.122a and revise paragraph S3 to read as follows:

§ 571.122a Standard No. 122a; Motorcycle brake systems.

* * * * *

S3. *Application.* This standard applies to motorcycles. However, this standard does not apply to motorcycles certified to comply with § 571.122.

* * * * *

■ 4. Add new § 571.122 to read as follows:

§ 571.122 Standard No. 122; Motorcycle brake systems.

S1. *Scope.* This standard specifies requirements for motorcycle service brake systems and, where applicable, associated parking brake systems.

S2. *Purpose.* The purpose of the standard is to ensure safe motorcycle braking performance under normal and emergency riding conditions.

S3. *Application.* This standard applies to category 3–1 motorcycles, category 3–2 motorcycles, category 3–3 motorcycles, and category 3–4 motorcycles manufactured on and after September 1, 2014. This standard applies to category 3–5 motorcycles manufactured on and after September 1, 2015. At the manufacturer's option, any motorcycle manufactured on or after October 23, 2012 may comply with this standard.

[111] National Technology Transfer and Advancement Act of 1995 § 12(d), 15 U.S.C. 272.

[112] Unfunded Mandates Reform Act of 1995 § 202, 2 U.S.C. 1532.

[113] 2 U.S.C. 1535.

[114] *Privacy Act of 1974: Systems of Records,* 65 FR 19476, 19478 (Apr. 11, 2000).

S4. *Definitions.*

Antilock brake system or *ABS* means a system which senses wheel slip and automatically modulates the pressure producing the braking forces at the wheel(s) to limit the degree of wheel slip.

Baseline test means a stop or a series of stops carried out in order to confirm the performance of the brake prior to subjecting it to a further test such as the heating procedure or wet brake stop.

Brake means those parts of the brake system where the forces opposing the movement of the motorcycle are developed.

Brake system means the combination of parts consisting of the control, the brake, and the components that provide the functional link between the control and the brake, but excluding the engine, whose function it is to progressively reduce the speed of a moving motorcycle, bring it to a halt, and keep it stationary when halted.

Category 3–1 motorcycle means a two-wheeled motorcycle with an engine cylinder capacity in the case of a thermic engine not exceeding 50 cubic centimeters (cm^3) and whatever the means of propulsion a maximum design speed not exceeding 50 kilometers per hour (km/h).

Category 3–2 motorcycle means a three-wheeled motorcycle of any wheel arrangement with an engine cylinder capacity in the case of a thermic engine not exceeding 50 cm^3 and whatever the means of propulsion a maximum design speed not exceeding 50 km/h.

Category 3–3 motorcycle means a two-wheeled motorcycle with an engine cylinder capacity in the case of a thermic engine exceeding 50 cm^3 or whatever the means of propulsion a maximum design speed exceeding 50 km/h.

Category 3–4 motorcycle means a motorcycle manufactured with three wheels asymmetrically arranged in relation to the longitudinal median plane with an engine cylinder capacity in the case of a thermic engine exceeding 50 cm^3 or whatever the means of propulsion a maximum design speed exceeding 50 km/h. (This category definition is intended to include motorcycles with sidecars.)

Category 3–5 motorcycle means a motorcycle manufactured with three wheels symmetrically arranged in relation to the longitudinal median plane with an engine cylinder capacity in the case of a thermic engine exceeding 50 cm^3 or whatever the means of propulsion a maximum design speed exceeding 50 km/h.

Combined brake system or *CBS* means:

(a) For motorcycle categories 3–1 and 3–3: a service brake system where at least two brakes on different wheels are actuated by the operation of a single control.

(b) For motorcycle categories 3–2 and 3–5: a service brake system where the brakes on all wheels are actuated by the operation of a single control.

(c) For motorcycle category 3–4: a service brake system where the brakes on at least the front and rear wheels are actuated by the operation of a single control. (If the rear wheel and the asymmetrical wheel are braked by the same brake system, this is regarded as the rear brake.)

Control means the part actuated directly by the rider in order to supply and regulate the energy required for braking the motorcycle.

Driver mass means the nominal mass of a driver that equals 75 kg (68 kg occupant mass plus 7kg of luggage mass).

Engine disconnected means when the engine is no longer internally connected to the driving wheel(s), i.e., the clutch is disengaged and/or the transmission is in neutral.

Gross vehicle mass means the maximum mass of the fully laden solo vehicle, based on its construction and design performances, as declared by the manufacturer.

Initial brake temperature means the temperature of the hottest brake before any brake application.

Laden means the gross vehicle mass.

Lightly loaded means mass in running order plus 15 kg for test equipment, or the laden condition, whichever is less. In the case of ABS tests on a low friction surface (paragraphs S6.9.4 to S6.9.7), the mass for test equipment is increased to 30 kg to account for outriggers.

Mass in running order means the sum of unladen vehicle mass and driver mass.

Peak braking coefficient or *PBC* means the measure of tire-to-road surface friction based on the maximum deceleration of a rolling tire.

Power-assisted braking system means a brake system in which the energy necessary to produce the braking force is supplied by the physical effort of the rider assisted by one or more energy supplying devices, for example vacuum assisted (with vacuum booster).

Secondary brake system means the second service brake system on a motorcycle equipped with a combined brake system.

Service brake system means a brake system which is used for slowing the motorcycle when in motion.

Sidecar means a one-wheeled vehicle that is attached to the side of a motorcycle.

Single brake system means a brake system which acts on only one axle.

Split service brake system or *SSBS* means a brake system that operates the brakes on all wheels, consisting of two or more subsystems actuated by a single control designed so that a single failure in any subsystem (such as a leakage type failure of a hydraulic subsystem) does not impair the operation of any other subsystem.

Stopping distance means the distance traveled by the motorcycle from the point the rider begins to actuate the brake control to the point at which the motorcycle reaches full stop. For tests where simultaneous actuation of two controls is specified, the distance traveled is taken from the point the first control is actuated.

Test speed means the motorcycle speed measured the moment the rider begins to actuate the brake control. For tests where simultaneous actuation of two controls is specified, the motorcycle speed is taken from the moment the first control is actuated.

Unladen vehicle mass means the nominal mass of a complete vehicle as determined by the following criteria:

(a) Mass of the vehicle with bodywork and all factory fitted equipment, electrical and auxiliary equipment for normal operation of vehicle, including liquids, tools, fire extinguisher, standard spare parts, chocks and spare wheel, if fitted.

(b) The fuel tanks filled to at least 90 percent of rated capacity and the other liquid containing systems (except those for used water) to 100 percent of the capacity specified by the manufacturer.

Vmax means either the speed attainable by accelerating at a maximum rate from a standing start for a distance of 1.6 km on a level surface, with the vehicle lightly loaded, or the speed measured in accordance with International Organization for Standardization (ISO) 7117:1995(E) (incorporated by reference; see § 571.5).

Wheel lock means the condition that occurs when there is 100 percent wheel slip.

S5. *General requirements.*

S5.1 *Brake system requirements.* Each motorcycle shall meet each of the test requirements specified for a motorcycle of its category and for those brake features on the motorcycle.

S5.1.1 *Service brake system control operation.* Each motorcycle shall have a configuration that enables a rider to actuate the service brake system control while seated in the normal driving

position and with both hands on the steering control.

S5.1.2 *Secondary brake system control operation.* Each motorcycle shall have a configuration that enables a rider to actuate the secondary brake system control while seated in the normal driving position and with at least one hand on the steering control.

S5.1.3 *Parking brake system.*

(a) If a parking brake system is fitted, it shall hold the motorcycle stationary on the slope prescribed in S6.8.2. The parking brake system shall:

(1) have a control which is separate from the service brake system controls; and

(2) be held in the locked position by solely mechanical means.

(b) Each motorcycle equipped with a parking brake shall have a configuration that enables a rider to be able to actuate the parking brake system while seated in the normal driving position.

S5.1.4 *Two-wheeled motorcycles of categories 3–1 and 3–3.* Each category 3–1 and 3–3 two-wheeled motorcycle shall be equipped with either two separate service brake systems, or a split service brake system, with at least one brake operating on the front wheel and at least one brake operating on the rear wheel.

S5.1.5 *Three-wheeled motorcycles of category 3–4.* Each category 3–4 motorcycle shall comply with the brake system requirements in S5.1.4. A brake on the asymmetric wheel (with respect to the longitudinal axis) is not required.

S5.1.6 *Three-wheeled motorcycles of category 3–2.* Each category 3–2 motorcycle shall be equipped with a parking brake system plus one of the following service brake systems:

(a) Two separate service brake systems, except CBS, which, when applied together, operate the brakes on all wheels; or

(b) A split service brake system; or

(c) A CBS that operates the brake on all wheels and a secondary brake system which may be the parking brake system.

S5.1.7 *Three-wheeled motorcycles of categories 3–5.* Each category 3–5 motorcycle shall be equipped with:

(a) A parking brake system; and

(b) A foot actuated service brake system which operates the brakes on all wheels by way of either:

(1) A split service brake system; or

(2) A CBS and a secondary brake system, which may be the parking brake system.

S5.1.8 *Two separate service brake systems.* For motorcycles where two separate service brake systems are installed, the systems may share a common brake, if a failure in one system does not affect the performance of the other.

S5.1.9 *Hydraulic service brake system.* For motorcycles that use hydraulic fluid for brake force transmission, the master cylinder shall:

(a) Have a sealed, covered, separate reservoir for each brake system; and

(b) Have a minimum reservoir capacity equivalent to 1.5 times the total fluid displacement required to satisfy the new to fully worn lining condition with the worst case brake adjustment conditions; and

(c) Have a reservoir where the fluid level is visible for checking without removal of the cover.

(d) Have a brake fluid warning statement that reads as follows, in letters at least 3/32 of an inch high: *Warning: Clean filler cap before removing. Use only _____ fluid from a sealed container* (inserting the recommended type of brake fluid as specified in accordance with 49 CFR 571.116, e.g., ''DOT 3''). The lettering shall be:

(1) Permanently affixed, engraved, or embossed;

(2) Located so as to be visible by direct view, either on or within 4 inches of the brake-fluid reservoir filler plug or cap; and

(3) Of a color that contrasts with its background, if it is not engraved or embossed.

S5.1.10 *Warning lamps.* All warning lamps shall be mounted in the rider's view.

S5.1.10.1 *Split service brake system warning lamps.*

(a) Each motorcycle that is equipped with a split service brake system shall be fitted with a red warning lamp, which shall be activated:

(1) When there is a hydraulic failure on the application of a force of ≤ 90 N on the control; or

(2) Without actuation of the brake control, when the brake fluid level in the master cylinder reservoir falls below the greater of:

(i) That which is specified by the manufacturer; or

(ii) That which is less than or equal to half of the fluid reservoir capacity.

(b) To permit function checking, the warning lamp shall be illuminated by the activation of the ignition switch and shall be extinguished when the check has been completed. The warning lamp shall remain on while a failure condition exists whenever the ignition switch is in the ''on'' position.

(c) Each indicator lamp shall have the legend ''Brake Failure'' on or adjacent to it in letters not less than 3/32 of an inch high that shall be legible to the driver in daylight when lighted.

S5.1.10.2 *Antilock brake system warning lamps.*

(a) Each motorcycle equipped with an ABS system shall be fitted with a yellow warning lamp. The lamp shall be activated whenever there is a malfunction that affects the generation or transmission of signals in the motorcycle's ABS system.

(b) To permit function checking, the warning lamp shall be illuminated by the activation of the ignition switch and extinguished when the check has been completed. The warning lamp shall remain on while a failure condition exists whenever the ignition switch is in the ''on'' position.

(c) The indicator shall be labeled in letters at least 3/32 of an inch high with the words ''Antilock'' or ''Anti-lock'' or ''ABS'' in accordance with Table 1 of Standard No. 101 (49 CFR 571.101).

S5.2 *Durability.*

S5.2.1 *Compensation for wear.* Wear of the brakes shall be compensated for by means of a system of automatic or manual adjustment.

S5.2.2 *Notice of wear.* The friction material thickness shall either be visible without disassembly, or where the friction material is not visible, wear shall be assessed by means of a device designed for that purpose.

S5.2.3 *Testing.* During all the tests in this standard and on their completion, there shall be no friction material detachment and no leakage of brake fluid.

S5.3 *Measurement of dynamic performance.* There are two ways in which brake system performance is measured. The particular method to be used is specified in the respective tests in S6.

S5.3.1 *Stopping distance.*

(a) Based on the basic equations of motion:

$$S = 0.1 \cdot V + (X) \cdot V^2,$$

Where:

S = stopping distance in meters
V = initial vehicle speed in km/h
X = a variable based on the requirement for each test

(b) To calculate the corrected stopping distance using the actual vehicle test speed, the following formula is used:

$$Ss = 0.1 \cdot Vs + (Sa - 0.1 \cdot Va) \cdot Vs^2/Va^2,$$

Where:

Ss = corrected stopping distance in meters
Vs = specified vehicle test speed in km/h
Sa = actual stopping distance in meters
Va = actual vehicle test speed in km/h

Note to S5.3.1(b): This equation is only valid when the actual test speed (Va) is within ± 5 km/h of the specified test speed (Vs).

S5.3.2 *Continuous deceleration recording.* The other method used to measure performance is the continuous

recording of the vehicle instantaneous deceleration from the moment a force is applied to the brake control until the end of the stop.

S6. *Test conditions, procedures and performance requirements.*

S6.1 *General.*

S6.1.1 *Test surfaces.*

S6.1.1.1 *High friction surface.* A high friction surface is used for all dynamic brake tests excluding the ABS tests where a low-friction surface is specified. The high-friction surface test area is a clean, dry and level surface, with a gradient of ≤ 1 percent. The high-friction surface has a peak braking coefficient (PBC) of 0.9.

S6.1.1.2 *Low-friction surface.* A low-friction surface is used for ABS tests where a low-friction surface is specified. The low-friction surface test area is a clean and level surface, which may be wet or dry, with a gradient of ≤ 1 percent. The low-friction surface has a PBC of ≤ 0.45.

S6.1.1.3 *Measurement of PBC.* The PBC is measured using the American Society for Testing and Materials (ASTM) E1136–93 (Reapproved 2003) standard reference test tire, in accordance with ASTM Method E1337–90 (Reapproved 2008), at a speed of 64 km/h (both publications incorporated by reference; see § 571.5).

S6.1.1.4 *Parking brake system tests.* The specified test slope has a clean and dry surface that does not deform under the weight of the motorcycle.

S6.1.1.5 *Test lane width.* For two-wheeled motorcycles (motorcycle categories 3–1 and 3–3) the test lane width is 2.5 meters. For three-wheeled motorcycles (motorcycle categories 3–2, 3–4 and 3–5) the test lane width is 2.5 meters plus the vehicle width.

S6.1.2 *Ambient temperature.* The ambient temperature is between 4 °C and 45 °C.

S6.1.3 *Wind speed.* The wind speed is not more than 5 meters per second (m/s).

S6.1.4 *Test speed tolerance.* The test speed tolerance is ± 5 km/h. In the event of the actual test speed deviating from the specified test speed (but within the ± 5 km/h tolerance), the actual stopping distance is corrected using the formula in S5.3.1(b).

S6.1.5 *Automatic transmission.* Motorcycles with automatic transmission shall meet all test requirements—whether they are for ''engine connected'' or ''engine disconnected.'' If an automatic transmission has a neutral position, the neutral position is selected for tests where ''engine disconnected'' is specified.

S6.1.6 *Vehicle position and wheel lock.* The vehicle is positioned in the center of the test lane for the beginning of each stop. Stops are made without the vehicle wheels passing outside the applicable test lane and without wheel lock.

S6.1.7 *Test sequence.* Test sequence is as specified in Table 1.

S6.2 *Preparation.*

S6.2.1 *Engine idle speed.* The engine idle speed is set to the manufacturer's specification.

S6.2.2 *Tire pressures.* The tires are inflated to the manufacturer's specification for the vehicle loading condition for the test.

S6.2.3 *Control application points and direction.* For a hand control lever, the input force (F) is applied on the control lever's forward surface perpendicular to the axis of the lever fulcrum and its outermost point on the plane along which the control lever rotates (see Figure 1). The input force is applied to a point located 50 millimeters (mm) from the outermost point of the control lever, measured along the axis between the central axis of the fulcrum of the lever and its outermost point. For a foot control pedal, the input force is applied to the center of, and at right angles to, the control pedal.

S6.2.4 *Brake temperature measurement.* The brake temperature is measured on the approximate center of the facing length and width of the most heavily loaded shoe or disc pad, one per brake, using a plug-type thermocouple that is embedded in the friction material, as shown in Figure 2.

S6.2.5 *Burnishing procedure.* The vehicle brakes are burnished prior to evaluating performance.

S6.2.5.1 *Vehicle condition.*

(a) Vehicle lightly loaded.

(b) Engine disconnected.

S6.2.5.2 *Conditions and procedure.*

(a) *Initial brake temperature.* Initial brake temperature before each brake application is ≤ 100 °C.

(b) *Test speed.*

(1) Initial speed: 50 km/h or 0.8 Vmax, whichever is lower.

(2) Final speed = 5 to 10 km/h.

(c) *Brake application.* Each service brake system control actuated separately.

(d) *Vehicle deceleration.*

(1) Single front brake system only:

(i) 3.0–3.5 meters per second squared (m/s^2) for motorcycle categories 3–3 and 3–4

(ii) 1.5–2.0 m/s^2 for motorcycle categories 3–1 and 3–2

(2) Single rear brake system only: 1.5–2.0 m/s^2

(3) CBS or split service brake system, and category 3–5: 3.5–4.0 m/s^2

(e) *Number of decelerations.* There shall be 100 decelerations per brake system.

(f) For the first stop, accelerate the vehicle to the initial speed and then actuate the brake control under the conditions specified until the final speed is reached. Then reaccelerate to the initial speed and maintain that speed until the brake temperature falls to the specified initial value. When these conditions are met, reapply the brake as specified. Repeat this procedure for the number of specified decelerations. After burnishing, adjust the brakes in accordance with the manufacturer's recommendations.

S6.3 *Dry stop test—single brake control actuated.*

S6.3.1 *Vehicle condition.*

(a) The test is applicable to all motorcycle categories.

(b) Laden. For vehicles fitted with CBS and split service brake system, the vehicle is tested in the lightly loaded condition in addition to the laden condition.

(c) Engine disconnected.

S6.3.2 *Test conditions and procedure.*

(a) *Initial brake temperature.* Initial brake temperature is ≥ 55 °C and ≤ 100 °C.

(b) *Test speed.*

(1) Motorcycle categories 3–1 and 3–2: 40 km/h or 0.9 Vmax, whichever is lower.

(2) Motorcycle categories 3–3, 3–4 and 3–5: 60 km/h or 0.9 Vmax, whichever is lower.

(c) *Brake application.* Each service brake system control actuated separately.

(d) *Brake actuation force.*

(1) Hand control: ≤ 200 N.

(2) Foot control:

(i) ≤ 350 N for motorcycle categories 3–1, 3–2, 3–3 and 3–5.

(ii) ≤ 500 N for motorcycle category 3–4.

(e) Number of stops: until the vehicle meets the performance requirements, with a maximum of 6 stops.

(f) For each stop, accelerate the vehicle to the test speed and then actuate the brake control under the conditions specified in this paragraph.

S6.3.3 *Performance requirements.* When the brakes are tested in accordance with the test procedure set out in paragraph S6.3.2., the stopping distance shall be as specified in column 2 of Table 2.

S6.4 *Dry stop test—all service brake controls actuated.*

S6.4.1 *Vehicle condition.*

(a) The test is applicable to motorcycle categories 3–3, 3–4 and 3–5.

(b) Lightly loaded.

(c) Engine disconnected.

S6.4.2 *Test conditions and procedure.*

(a) *Initial brake temperature.* Initial brake temperature is ≥ 55 °C and ≤ 100 °C.

(b) *Test speed.* Test speed is 100 km/h or 0.9 Vmax, whichever is lower.

(c) *Brake application.* Simultaneous actuation of both service brake system controls, if so equipped, or of the single service brake system control in the case of a service brake system that operates on all wheels.

(d) *Brake actuation force.*

(1) Hand control: ≤ 250 N.

(2) Foot control:

(i) ≤ 400 N for motorcycle categories 3–3 and 3–4.

(ii) ≤ 500 N for motorcycle category 3–5.

(e) Number of stops: until the vehicle meets the performance requirements, with a maximum of 6 stops.

(f) For each stop, accelerate the vehicle to the test speed and then actuate the brake control under the conditions specified in this paragraph.

S6.4.3 *Performance requirements.* When the brakes are tested in accordance with the test procedure set out in paragraph S6.4.2., the stopping distance (S) shall be $S \leq 0.0060\ V^2$ (where V is the specified test speed in km/h and S is the required stopping distance in meters).

S6.5 *High speed test.*

S6.5.1 *Vehicle condition.*

(a) The test is applicable to motorcycle categories 3–3, 3–4 and 3–5.

(b) Test is not required for vehicles with Vmax ≤ 125 km/h.

(c) Lightly loaded.

(d) Engine connected (clutch engaged) with the transmission in the highest gear.

S6.5.2 *Test conditions and procedure.*

(a) *Initial brake temperature.* Initial brake temperature is ≥ 55 °C and ≤ 100 °C.

(b) *Test speed.*

(1) Test speed is 0.8 Vmax for motorcycles with Vmax > 125 km/h and < 200 km/h.

(2) Test speed is 160 km/h for motorcycles with Vmax ≥ 200 km/h.

(c) *Brake application.* Simultaneous actuation of both service brake system controls, if so equipped, or of the single service brake system control in the case of a service brake system that operates on all wheels.

(d) *Brake actuation force.*

(1) Hand control: ≤ 200 N.

(2) Foot control:

(i) ≤ 350 N for motorcycle categories 3–3 and 3–4.

(ii) ≤ 500 N for motorcycle category 3–5.

(e) Number of stops: until the vehicle meets the performance requirements, with a maximum of 6 stops.

(f) For each stop, accelerate the vehicle to the test speed and then actuate the brake control(s) under the conditions specified in this paragraph.

S6.5.3 *Performance requirements.* When the brakes are tested in accordance with the test procedure set out in paragraph S6.5.2, the stopping distance (S) shall be $\leq 0.1\ V + 0.0067\ V^2$ (where V is the specified test speed in km/h and S is the required stopping distance in meters).

S6.6 *Wet brake test.*

S6.6.1 *General information.*

(a) The test is comprised of two parts that are carried out consecutively for each brake system:

(1) A baseline test based on the dry stop test—single brake control actuated (S6.3).

(2) A single wet brake stop using the same test parameters as in (1), but with the brake(s) being continuously sprayed with water while the test is conducted in order to measure the brakes' performance in wet conditions.

(b) The test is not applicable to parking brake systems unless it is the secondary brake.

(c) Drum brakes or fully enclosed disc brakes are excluded from this test unless ventilation or open inspection ports are present.

(d) This test requires the vehicle to be fitted with instrumentation that gives a continuous recording of brake control force and vehicle deceleration.

S6.6.2 *Vehicle condition.*

(a) The test is applicable to all motorcycle categories.

(b) Laden. For vehicles fitted with CBS and split service brake system, the vehicle is tested in the lightly loaded condition in addition to the laden condition.

(c) Engine disconnected.

(d) Each brake is fitted with water spray equipment as shown in Figure 3.

(1) *Disc brakes—sketch of water spray equipment.* The disc brake water spray equipment is installed as follows:

(i) Water is sprayed onto each brake with a flow rate of 15 liters/hr. The water is equally distributed on each side of the rotor.

(ii) If the surface of the rotor has any shielding, the spray is applied 45° prior to the shield.

(iii) If it is not possible to locate the spray in the position shown on the sketch, or if the spray coincides with a brake ventilation hole or similar, the spray nozzle may be advanced by an additional 90° maximum from the edge of the pad, using the same radius.

(2) *Drum brakes with ventilation and open inspection ports.* The water spray equipment is installed as follows:

(i) Water is sprayed equally onto both sides of the drum brake assembly (on the stationary back plate and on the rotating drum) with a flow rate of 15 liters/hr.

(ii) The spray nozzles are positioned two thirds of the distance from the outer circumference of the rotating drum to the wheel hub center.

(iii) The nozzle position is > 15° from the edge of any opening in the drum back plate.

S6.6.3 *Baseline test—test conditions and procedure.*

(a) The test in paragraph S6.3 (dry stop test—single brake control actuated) is carried out for each brake system but with the brake control force that results in a vehicle deceleration of 2.5–3.0 m/s², and the following is determined:

(1) The average brake control force measured when the vehicle is traveling between 80 percent and 10 percent of the specified test speed.

(2) The average vehicle deceleration in the period 0.5 to 1.0 seconds after the point of actuation of the brake control.

(3) The maximum vehicle deceleration during the complete stop but excluding the final 0.5 seconds.

(b) Conduct 3 baseline stops and average the values obtained in (1), (2), and (3).

S6.6.4 *Wet brake test—test conditions and procedure.*

(a) The vehicle is ridden at the test speed used in the baseline test set out in S6.6.3 with the water spray equipment operating on the brake(s) to be tested and with no application of the brake system.

(b) After a distance of ≥ 500 m, apply the average brake control force determined in the baseline test for the brake system being tested.

(c) Measure the average vehicle deceleration in the period 0.5 to 1.0 seconds after the point of actuation of the brake control.

(d) Measure the maximum vehicle deceleration during the complete stop but excluding the final 0.5 seconds.

S6.6.5 *Performance requirements.* When the brakes are tested in accordance with the test procedure set out in paragraph S6.6.4, the wet brake deceleration performance shall be:

(a) The value measured in paragraph S6.6.4(c) shall be ≥ 60 percent of the average deceleration values recorded in the baseline test in paragraph S6.6.3(a)(2), i.e., in the period 0.5 to 1.0 seconds after the point of actuation of the brake control; and

(b) The value measured in S6.6.4(d) shall be ≤ 120 percent of the average

deceleration values recorded in the baseline test S6.6.3(a)(3), i.e., during the complete stop but excluding the final 0.5 seconds.

S6.7 *Heat fade test.*

S6.7.1 *General information.*

(a) The test comprises three parts that are carried out consecutively for each brake system:

(1) A baseline test using the dry stop test—single brake control actuated (S6.3).

(2) A heating procedure which consists of a series of repeated stops in order to heat the brake(s).

(3) A hot brake stop using the dry stop test—single brake control actuated (S6.3), to measure the brake's performance after the heating procedure.

(b) The test is applicable to motorcycle categories 3–3, 3–4 and 3–5.

(c) The test is not applicable to parking brake systems and secondary service brake systems.

(d) All stops are carried out with the motorcycle laden.

(e) The heating procedure requires the motorcycle to be fitted with instrumentation that gives a continuous recording of brake control force and vehicle deceleration.

S6.7.2 *Baseline test.*

S6.7.2.1 *Vehicle condition—baseline test.* Engine disconnected.

S6.7.2.2 *Test conditions and procedure—baseline test.*

(a) *Initial brake temperature.* Initial brake temperature is ≥ 55 °C and ≤ 100 °C.

(b) *Test speed.* Test speed is 60 km/h or 0.9 Vmax, whichever is the lower.

(c) *Brake application.* Each service brake system control is actuated separately.

(d) *Brake actuation force.*

(1) Hand control: ≤ 200 N.

(2) Foot control:

(i) ≤ 350 N for motorcycle categories 3–3 and 3–4.

(ii) ≤ 500 N for motorcycle category 3–5.

(e) Accelerate the vehicle to the test speed, actuate the brake control under the conditions specified and record the control force required to achieve the vehicle braking performance specified in the table to S6.3.3 (Table 2).

S6.7.3 *Heating procedure.*

S6.7.3.1 *Vehicle condition—heating procedure.* Engine transmission:

(a) From the specified test speed to 50 per cent specified test speed: connected, with the highest appropriate gear selected such that the engine speed remains above the manufacturer's specified idle speed.

(b) From 50 per cent specified test speed to standstill: disconnected.

S6.7.3.2 *Test conditions and procedure—heating procedure.*

(a) *Initial brake temperature.* Initial brake temperature is (prior to first stop only) ≥ 55 °C and ≤ 100 °C.

(b) *Test speed.*

(1) Single brake system, front wheel braking only: 100 km/h or 0.7 Vmax, whichever is the lower.

(2) Single brake system, rear wheel braking only: 80 km/h or 0.7 Vmax, whichever is the lower.

(3) CBS or split service brake system: 100 km/h or 0.7 Vmax, whichever is the lower.

(c) *Brake application.* Each service brake system control actuated separately.

(d) *Brake actuation force.*

(1) For the first stop: The constant control force that achieves a vehicle deceleration rate of 3.0—3.5 m/s² while the vehicle is decelerating between 80 percent and 10 percent of the specified speed.

(2) For the remaining stops:

(i) The same constant brake control force as used for the first stop.

(ii) Number of stops: 10.

(iii) Interval between stops: 1000 m.

(e) Carry out a stop to the conditions specified in this paragraph and then immediately use maximum acceleration to reach the specified speed and maintain that speed until the next stop is made.

S6.7.4 *Hot brake stop—test conditions and procedure.* Perform a single stop under the conditions used in the baseline test (S6.7.2) for the brake system that has been heated during the procedure in accordance with S6.7.3. This stop is carried out within one minute of the completion of the procedure set out in S6.7.3 with a brake control application force less than or equal to the force used during the test set out in S6.7.2.

S6.7.5 *Performance requirements.* When the brakes are tested in accordance with the test procedure set out in S6.7.4, the stopping distance S_2 shall be $\leq 1.67\ S_1 - 0.67 \times 0.1V$,

Where:

S_1 = corrected stopping distance in meters achieved in the baseline test set out in S6.7.2.

S_2 = corrected stopping distance in meters achieved in the hot brake stop set out in S6.7.4.

V = specified test speed in km/h.

S6.8 *Parking brake system test—for motorcycles with parking brakes.*

S6.8.1 *Vehicle condition.*

(a) The test is applicable to motorcycle categories 3–2, 3–4 and 3–5.

(b) Laden.

(c) Engine disconnected.

S6.8.2 *Test conditions and procedure.*

(a) *Initial brake temperature.* Initial brake temperature is ≤ 100 °C.

(b) *Test surface gradient.* Test surface gradient is equal to 18 percent.

(c) *Brake actuation force.*

(1) Hand control: ≤ 400 N.

(2) Foot control: ≤ 500 N.

(d) For the first part of the test, park the vehicle on the test surface gradient facing up the slope by applying the parking brake system under the conditions specified in this paragraph. If the vehicle remains stationary, start the measurement of the test period.

(e) The vehicle must remain stationary to the limits of traction of the braked wheels.

(f) On completion of the test with vehicle facing up the gradient, repeat the same test procedure with the vehicle facing down the gradient.

S6.8.3 *Performance requirements.* When tested in accordance with the test procedure set out in S6.8.2, the parking brake system shall hold the vehicle stationary for 5 minutes when the vehicle is both facing up and facing down the gradient.

S6.9 *ABS tests.*

S6.9.1 *General.*

(a) The tests are only applicable to the ABS fitted on motorcycle categories 3–1 and 3–3.

(b) The tests are to confirm the performance of brake systems equipped with ABS and their performance in the event of ABS electrical failure.

(c) *Fully cycling* means that the anti-lock system is repeatedly modulating the brake force to prevent the directly controlled wheels from locking.

(d) Wheel-lock is allowed as long as the stability of the vehicle is not affected to the extent that it requires the operator to release the control or causes a vehicle wheel to pass outside the test lane.

(e) The test series comprises the individual tests in Table 3, which may be carried out in any order.

S6.9.2 *Vehicle condition.*

(a) Lightly loaded.

(b) Engine disconnected.

S6.9.3 *Stops on a high friction surface.*

S6.9.3.1 *Test conditions and procedure.*

(a) *Initial brake temperature.* Initial brake temperature is ≥ 55 °C and ≤ 100 °C.

(b) *Test speed.* Test speed is 60 km/h or 0.9 Vmax, whichever is lower.

(c) *Brake application.* Simultaneous actuation of both service brake system controls, if so equipped, or of the single service brake control in the case of a service brake system that operates on all wheels.

(d) *Brake actuation force.* The force applied is that which is necessary to ensure that the ABS will cycle fully throughout each stop, down to 10 km/h.

(e) If one wheel is not equipped with ABS, the control for the service brake on that wheel is actuated with a force that is lower than the force that will cause the wheel to lock.

(f) Number of stops: until the vehicle meets the performance requirements, with a maximum of 6 stops.

(g) For each stop, accelerate the vehicle to the test speed and then actuate the brake control under the conditions specified in this paragraph.

S6.9.3.2 *Performance requirements.* When the brakes are tested in accordance with the test procedures referred to in S6.9.3.1:

(a) The stopping distance (S) shall be $\leq 0.0063\ V^2$ (where V is the specified test speed in km/h and S is the required stopping distance in meters); and

(b) there shall be no wheel lock beyond that allowed for in paragraph S6.9.1(d), and the vehicle wheels shall stay within the test lane.

S6.9.4 *Stops on a low friction surface.*

S6.9.4.1 *Test conditions and procedure.* As set out in S6.9.3.1, but using the low friction surface instead of the high friction one.

S6.9.4.2 *Performance requirements.* When the brakes are tested in accordance with the test procedures set out in S6.9.4.1:

(a) the stopping distance (S) shall be $\leq 0.0056\ V^2/P$ (where V is the specified test speed in km/h, P is the peak braking coefficient and S is the required stopping distance in meters); and

(b) there shall be no wheel lock beyond that allowed for in paragraph S6.9.1(d), and the vehicle wheels shall stay within the test lane.

S6.9.5 *Wheel lock checks on high and low friction surfaces.*

S6.9.5.1 *Test conditions and procedure.*

(a) *Test surfaces.* High friction or low friction surface, as applicable.

(b) *Initial brake temperature.* Initial brake temperature is ≥ 55 °C and ≤ 100 °C.

(c) *Test speed.*

(1) On the high friction surface: 80 km/h or 0.8 Vmax, whichever is lower.

(2) On the low friction surface: 60 km/h or 0.8 Vmax, whichever is lower.

(d) *Brake application.*

(1) Each service brake system control actuated separately.

(2) Where ABS is fitted to both brake systems, simultaneous actuation of both brake controls in addition to (1).

(e) *Brake actuation force.* The force applied is that which is necessary to ensure that the ABS will cycle fully throughout each stop, down to 10 km/h.

(f) *Brake application rate.* The brake control actuation force is applied in 0.2–0.5 seconds.

(g) Number of stops: until the vehicle meets the performance requirements, with a maximum of 3 stops.

(h) For each stop, accelerate the vehicle to the test speed and then actuate the brake control under the conditions specified in this paragraph.

S6.9.5.2 *Performance requirements.* When the brakes are tested in accordance with the test procedures set out in S6.9.5.1, there shall be no wheel lock beyond that allowed for in paragraph S6.9.1(d), and the vehicle wheels shall stay within the test lane.

S6.9.6 *Wheel lock check—high to low friction surface transition.*

S6.9.6.1 *Test conditions and procedure.*

(a) *Test surfaces.* A high friction surface immediately followed by a low friction surface.

(b) *Initial brake temperature.* Initial brake temperature is ≥ 55 °C and ≤ 100 °C.

(c) *Test speed.* The speed that will result in 50 km/h or 0.5 Vmax, whichever is the lower, at the point where the vehicle passes from the high friction to the low friction surface.

(d) *Brake application.*

(1) Each service brake system control actuated separately.

(2) Where ABS is fitted to both brake systems, simultaneous actuation of both brake controls in addition to (1).

(e) *Brake actuation force.* The force applied is that which is necessary to ensure that the ABS will cycle fully throughout each stop, down to 10 km/h.

(f) Number of stops: until the vehicle meets the performance requirements, with a maximum of 3 stops.

(g) For each stop, accelerate the vehicle to the test speed and then actuate the brake control before the vehicle reaches the transition from one friction surface to the other.

S6.9.6.2 *Performance requirements.* When the brakes are tested in accordance with the test procedures set out in S6.9.6.1, there shall be no wheel lock beyond that allowed for in paragraph S6.9.1(d), and the vehicle wheels shall stay within the test lane.

S6.9.7 *Wheel lock check—low to high friction surface transition.*

S6.9.7.1 *Test conditions and procedure.*

(a) *Test surfaces.* A low friction surface immediately followed by a high friction surface with a PBC ≥ 0.8.

(b) *Initial brake temperature.* Initial brake temperature is ≥55 °C and ≤100 °C.

(c) *Test speed.* The speed that will result in 50 km/h or 0.5 Vmax, whichever is the lower, at the point where the vehicle passes from the low friction to the high friction surface.

(d) *Brake application.*

(1) Each service brake system control applied separately.

(2) Where ABS is fitted to both brake systems, simultaneous application of both brake controls in addition to (1).

(e) *Brake actuation force.* The force applied is that which is necessary to ensure that the ABS will cycle fully throughout each stop, down to 10 km/h.

(f) Number of stops: until the vehicle meets the performance requirements, with a maximum of 3 stops.

(g) For each stop, accelerate the vehicle to the test speed and then actuate the brake control before the vehicle reaches the transition from one friction surface to the other.

(h) Record the vehicle's continuous deceleration.

S6.9.7.2 *Performance requirements.* When the brakes are tested in accordance with the test procedures set out in S6.9.7.1:

(a) There shall be no wheel lock beyond that allowed for in paragraph S6.9.1(d), and the vehicle wheels shall stay within the test lane, and

(b) within 1 second of the rear wheel passing the transition point between the low and high friction surfaces, the vehicle deceleration shall increase.

S6.9.8 *Stops with an ABS electrical failure.*

S6.9.8.1 *Test conditions and procedure.* With the ABS electrical system disabled, carry out the test set out in S6.3 (dry stop test—single brake control actuated) applying the conditions relevant to the brake system and vehicle being tested.

S6.9.8.2 *Performance requirements.* When the brakes are tested in accordance with the test procedure set out in S6.9.8.1:

(a) The system shall comply with the failure warning requirements of S5.1.10.2; and

(b) the minimum requirements for stopping distance shall be as specified in column 2 under the heading ''Single brake system, rear wheel(s) braking only'' in Table 2.

S6.10 *Partial failure test—for split service brake systems.*

S6.10.1 *General information.*

(a) The test is only applicable to vehicles that are equipped with split service brake systems.

(b) The test is to confirm the performance of the remaining subsystem

in the event of a hydraulic system leakage failure.

S6.10.2 *Vehicle condition.*

(a) The test is applicable to motorcycle categories 3–3, 3–4 and 3–5.

(b) Lightly loaded.

(c) Engine disconnected.

S6.10.3 *Test conditions and procedure.*

(a) *Initial brake temperature.* Initial brake temperature is ≥ 55 °C and ≤ 100 °C.

(b) *Test speed.* Test speed is 50 km/h and 100 km/h or 0.8 Vmax, whichever is lower.

(c) Brake actuation force.

(1) Hand control: ≤ 250 N.

(2) Foot control: ≤ 400 N.

(d) Number of stops: until the vehicle meets the performance requirements, with a maximum of 6 stops for each test speed.

(e) Alter the service brake system to induce a complete loss of braking in any one subsystem. Then, for each stop, accelerate the vehicle to the test speed and then actuate the brake control under the conditions specified in this paragraph.

(f) Repeat the test for each subsystem.

S6.10.4 *Performance requirements.* When the brakes are tested in accordance with the test procedure set out in S6.10.3:

(a) the system shall comply with the failure warning requirements set out in paragraph S5.1.10.1; and

(b) the stopping distance (S) shall be $\leq 0.1\ V + 0.0117\ V^2$ (where V is the specified test speed in km/h and S is the required stopping distance in meters).

S6.11 *Power-assisted braking system failure test.*

S6.11.1 *General information.*

(a) The test is not conducted when the vehicle is equipped with another separate service brake system.

(b) The test is to confirm the performance of the service brake system in the event of failure of the power assistance.

S6.11.2 *Test conditions and procedure.* Carry out the test set out in S6.3.3 (dry stop test—single brake control actuated) for each service brake system with the power assistance disabled.

S6.11.3 *Performance requirements.* When the brakes are tested in accordance with the test procedure set out in S6.11.2, the stopping distance shall be as specified in column 2 of Table 4. Note that if the power assistance may be activated by more than one control, the above performance shall be achieved when each control is actuated separately.

Tables and Figures to § 571.122

TABLE 1—TEST SEQUENCE

Test order	Paragraph
1. Dry stop—single brake control actuated	S6.3
2. Dry stop—all service brake controls actuated	S6.4
3. High speed	S6.5
4. Wet brake	S6.6
5. If fitted:	
6.1. Parking brake system	S6.8
6.2. ABS	S6.9
6.3. Partial failure, for split service brake systems	S6.10
6.4. Power-assisted braking system failure	S6.11
6. Heat fade	S6.7

TABLE 2—PERFORMANCE REQUIREMENTS, DRY STOP TEST—SINGLE BRAKE CONTROL ACTUATED

Column 1	Column 2
Motorcycle category	Stopping Distance(s) (where V is the specified test speed in km/h and S is the required stopping distance in meters)
Single brake system, front wheel(s) braking only	
3–1	$S \leq 0.1\ V + 0.0111\ V^2$.
3–2	$S \leq 0.1\ V + 0.0143\ V^2$.
3–3	$S \leq 0.1\ V + 0.0087\ V^2$.
3–4	$S \leq 0.1\ V + 0.0105\ V^2$.
3–5	Not applicable.
Single brake system, rear wheel(s) braking only	
3–1	$S \leq 0.1\ V + 0.0143\ V^2$.
3–2	$S \leq 0.1\ V + 0.0143\ V^2$.
3–3	$S \leq 0.1\ V + 0.0133\ V^2$.
3–4	$S \leq 0.1\ V + 0.0105\ V^2$.
3–5	Not applicable.
Vehicles with CBS or split service brake systems: For laden and lightly loaded conditions	
3–1 and 3–2	$S \leq 0.1\ V + 0.0087\ V^2$.
3–3	$S \leq 0.1\ V + 0.0076\ V^2$.
3–4	$S \leq 0.1\ V + 0.0071\ V^2$.

TABLE 2—PERFORMANCE REQUIREMENTS, DRY STOP TEST—SINGLE BRAKE CONTROL ACTUATED—Continued

Column 1	Column 2
Motorcycle category	Stopping Distance(s) (where V is the specified test speed in km/h and S is the required stopping distance in meters)
3–5	$S \leq 0.1\ V + 0.0077\ V^2$.
Vehicles with CBS—secondary service brake system	
ALL	$S \leq 0.1\ V + 0.0154\ V^2$.

TABLE 3—ABS TESTS

ABS Tests	Paragraph
a. Stops on a high friction surface—as specified in S6.1.1.1	S6.9.3
b. Stops on a low friction surface—as specified in S6.1.1.2	S6.9.4
c. Wheel lock checks on high and low friction surfaces	S6.9.5
d. Wheel lock check—high to low friction surface transition	S6.9.6
e. Wheel lock check—low to high friction surface transition	S6.9.7
f. Stops with an ABS electrical failure	S6.9.8

TABLE 4—PERFORMANCE REQUIREMENTS, POWER-ASSISTED BRAKING SYSTEM FAILURE TEST

Column 1	Column 2
Vehicle category	Stopping Distance(s) (where V is the specified test speed in km/h and S is the required stopping distance in meters)
Single brake system	
3–1	$S \leq 0.1\ V + 0.0143\ V^2$.
3–2	$S \leq 0.1\ V + 0.0143\ V^2$.
3–3	$S \leq 0.1\ V + 0.0133\ V^2$.
3–4	$S \leq 0.1\ V + 0.0105\ V^2$.
Vehicles with CBS or split service brake systems	
All	$S \leq 0.1\ V + 0.0154\ V^2$.

BILLING CODE P

Figure 1. Hand control lever force application points and direction.

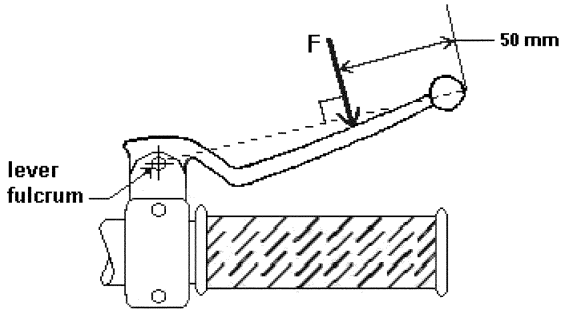

Figure 2. Typical Plug Type Thermocouple Installations

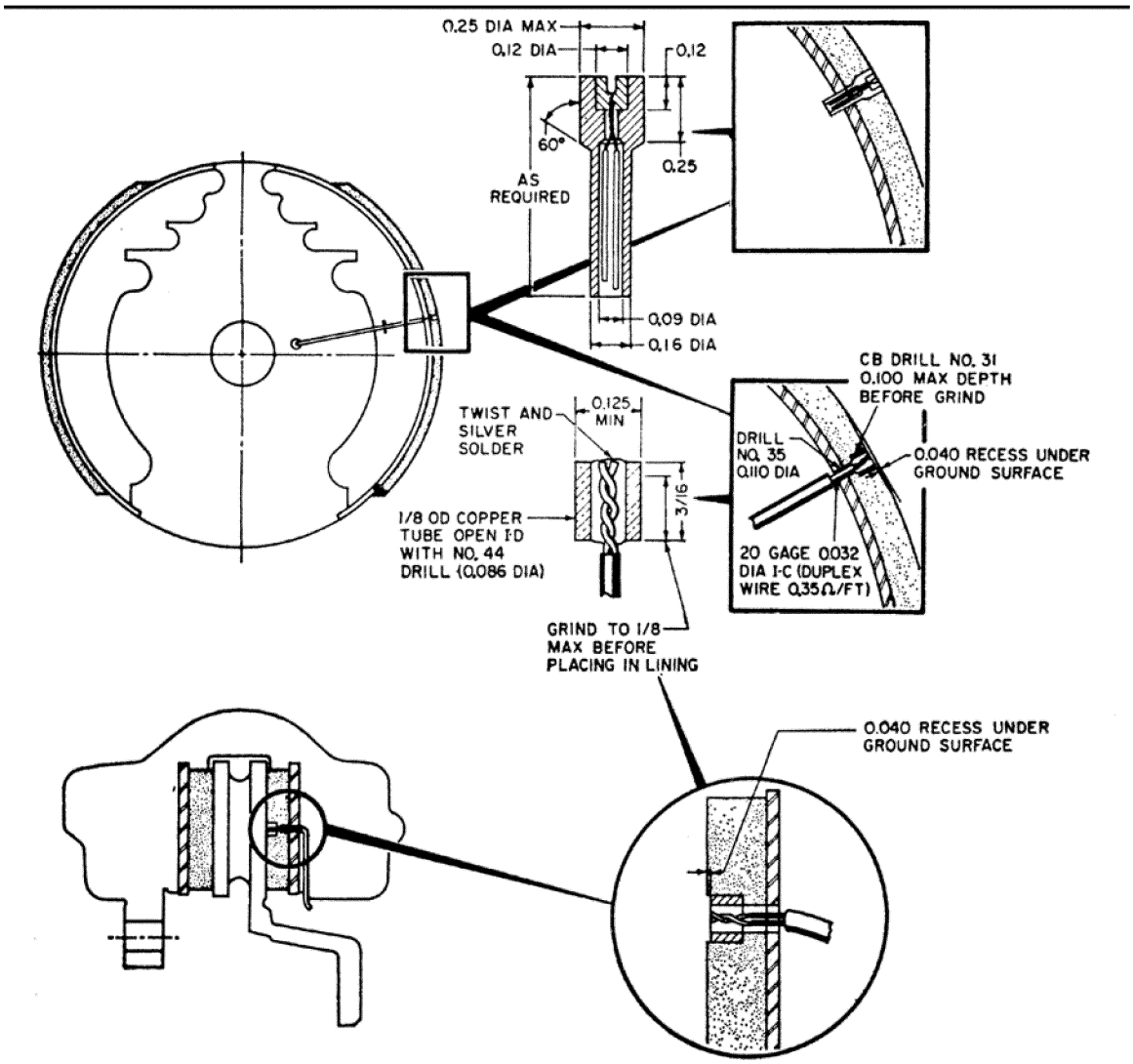

Figure 3. Wet brake test.

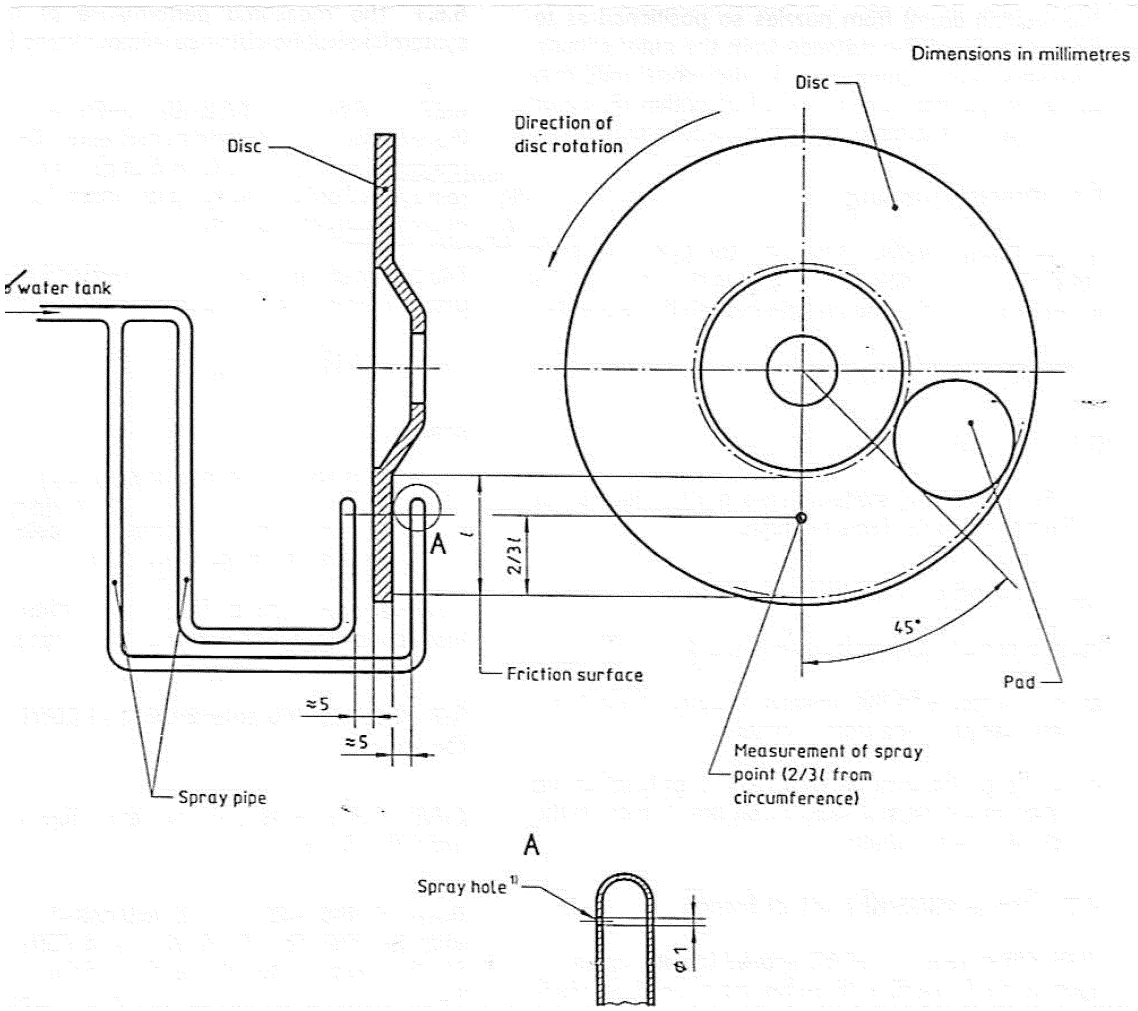

Issued on: August 14, 2012.

David L. Strickland,

Administrator.

[FR Doc. 2012–20480 Filed 8–23–12; 8:45 am]

BILLING CODE C